STATE OF MICHIGAN
ENTERPRISE PROCUREMENT

Department of Technology, Management, and Budget
525 W. ALLEGAN ST., LANSING, MICHIGAN 48913
P.O. BOX 30026 LANSING, MICHIGAN 48909

CONTRACT CHANGE NOTICE

Change Notice Number **6**
to
Contract Number **071B7700091**

CURRENT CONTRACTOR	
	Bell Equipment Co.
	78 Northpointe Drive
	Lake Orion, MI 48359
	James Bell
	248-370-0000
	jbell@bellequip.com
	CV0022702

NEW CONTRACTOR	
	MacQueen Equipment LLC, DBA Bell Equipment Co.
	78 Northpointe Drive
	Lake Orion, MI 48359
	Dan Bell
	248-370-0000
	dbell@bellequip.com
	VS0196152

STATE CONTACTS					
Program Manager	Scott Poyer	MDOT	Contract Administrator	Yvon Dufour	DTMB
	517-284-6448			517-249-0455	
	poyers@michigan.gov			dufoury@michigan.gov	

CONTRACT SUMMARY

DESCRIPTION: CONSTRUCTION EQUIPMENT PURCHASE & RENTAL

INITIAL EFFECTIVE DATE	INITIAL EXPIRATION DATE	INITIAL AVAILABLE OPTIONS	EXPIRATION DATE BEFORE CHANGE(S) NOTED BELOW
January 13, 2017	January 12, 2021	2 – 1 year	January 12, 2023

PAYMENT TERMS	DELIVERY TIMEFRAME

ALTERNATE PAYMENT OPTIONS	EXTENDED PURCHASING
☐ P-card ☐ Direct Voucher (DV) ☐ Other	☒ Yes ☐ No

MINIMUM DELIVERY REQUIREMENTS

DESCRIPTION OF CHANGE NOTICE

OPTION	LENGTH OF OPTION	EXTENSION	LENGTH OF EXTENSION	REVISED EXP. DATE
☐		☐		

CURRENT VALUE	VALUE OF CHANGE NOTICE	ESTIMATED AGGREGATE CONTRACT VALUE
$3,500,000.00	$0.00	$3,500,000.00

DESCRIPTION: Effective 4/16/2021, the following amendment is hereby incorporated into the contract. Bell Equipment is sold to MacQueen Equipment, St Paul, MN. This is a legal ownership change. Customer Number and Tax ID have changed as a result. All local employees shall be retained with the exception of the Company President. All other terms, conditions, specifications and pricing remain the same. Per contractor request, and DTMB Procurement approval.

STATE OF MICHIGAN
CENTRAL PROCUREMENT SERVICES
Department of Technology, Management, and Budget

525 W. ALLEGAN ST., LANSING, MICHIGAN 48913
P.O. BOX 30026 LANSING, MICHIGAN 48909

CONTRACT CHANGE NOTICE

Change Notice Number **5**

to

Contract Number **071B7700091**

CONTRACTOR	
	BELL EQUIPMENT CO
	78 Northpointe Drive
	Lake Orion, MI 48359
	James Bell
	248-370-0000
	jbell@bellequip.com
	CV0022702

STATE			
	Program Manager	Scott Poyer	SW
		517-284-6448	
		poyers@Michigan.gov	
	Contract Administrator	Yvon Dufour	DTMB
		(517) 249-0455	
		dufoury@michigan.gov	

CONTRACT SUMMARY

CONSTRUCTION EQUIPMENT PURCHASE & RENTAL

INITIAL EFFECTIVE DATE	INITIAL EXPIRATION DATE	INITIAL AVAILABLE OPTIONS	EXPIRATION DATE BEFORE
January 13, 2017	January 12, 2021	2 - 1 Year	January 12, 2021

PAYMENT TERMS	DELIVERY TIMEFRAME

ALTERNATE PAYMENT OPTIONS	EXTENDED PURCHASING
☐ P-Card ☐ PRC ☐ Other	☒ Yes ☐ No

MINIMUM DELIVERY REQUIREMENTS

DESCRIPTION OF CHANGE NOTICE

OPTION	LENGTH OF OPTION	EXTENSION	LENGTH OF EXTENSION	REVISED EXP. DATE
☒	2 years	☐		January 12, 2023

CURRENT VALUE	VALUE OF CHANGE NOTICE	ESTIMATED AGGREGATE CONTRACT VALUE
$3,500,000.00	$0.00	$3,500,000.00

DESCRIPTION

Effective 11/16/2020, the first and second option years available on this contract are hereby exercised. The revised contract expiration date is 1/12/2023. All other terms, conditions, specifications and pricing remain the same. Per agency request, and DTMB Procurement approval.

STATE OF MICHIGAN
CENTRAL PROCUREMENT SERVICES
Department of Technology, Management, and Budget

525 W. ALLEGAN ST., LANSING, MICHIGAN 48913
P.O. BOX 30026 LANSING, MICHIGAN 48909

CONTRACT CHANGE NOTICE

Change Notice Number **4**

to

Contract Number **071B7700091**

CONTRACTOR	
	BELL EQUIPMENT CO
	78 Northpointe Drive
	Lake Orion, MI 48359
	James Bell
	248-370-0000
	jbell@bellequip.com
	CV0022702

STATE			
	Program Manager	Scott Poyer	SW
		517-284-6448	
		poyers@Michigan.gov	
	Contract Administrator	Yvon Dufour	DTMB
		(517) 249-0455	
		dufoury@michigan.gov	

CONTRACT SUMMARY

CONSTRUCTION EQUIPMENT PURCHASE & RENTAL

INITIAL EFFECTIVE DATE	INITIAL EXPIRATION DATE	INITIAL AVAILABLE OPTIONS	EXPIRATION DATE BEFORE
January 13, 2017	January 12, 2021	2 - 1 Year	January 12, 2021

PAYMENT TERMS	DELIVERY TIMEFRAME

ALTERNATE PAYMENT OPTIONS			EXTENDED PURCHASING	
☐ P-Card	☐ PRC	☐ Other	☒ Yes	☐ No

MINIMUM DELIVERY REQUIREMENTS

DESCRIPTION OF CHANGE NOTICE

OPTION	LENGTH OF OPTION	EXTENSION	LENGTH OF EXTENSION	REVISED EXP. DATE
☐		☐		January 12, 2021

CURRENT VALUE	VALUE OF CHANGE NOTICE	ESTIMATED AGGREGATE CONTRACT VALUE
$2,500,000.00	$0.00	$2,500,000.00

DESCRIPTION

Effective 4/3/2020 pricing on this contract hereby updated, per revised Shedules E1, E3, E5, and E8. Schedules E2, E6, E7, and E9 from CN1 are attached for a complete pricing reference. All other terms, conditions, specifications and pricing remain the same. Per contractor request, and DTMB Procurement approval.

SPARTAN LEAF PRO

EQUIPMENT FEATURES:

- Safety interlock system on intake nozzle
- 50 gallon fuel tank
- 14,000 - pound 3" adjustable pintle eye with safety chain
- 74 h.p. Tier 4, liquid-cooled diesel-powered engine
- Manual jack, fire extinguisher, and wheel chocks
- 15 - 30 yd collection body with full tailgate
- DOT compliant lighting, markings, yellow flashers
- 12 volt battery with electrical system
- 12,000-pound axles with electric trailer brakes
- Heavy duty direct drive fan

Shown with options

Spartan LEAF™ PRO

HGACBuy
THE SMART PURCHASING SOLUTION

SPECIFICATIONS

Capacity and Empty Weight	15 cu. yard - 10,500 lbs. 20 cu. yard - 11,000 lbs. 25 cu. yard - 12,500 lbs 30 cu. yard - 13,000 lbs.
Fuel Tank	50 U.S. Gallons
Engine	74 h.p. Tier 4, liquid-cooled diesel-powered engine
Battery	12 Volt, 1190 Amp; 950 CCA
Axles	Tandem 12,000 lb Axles with duel wheels
Tires	ST235/80R16, load range E
Jack	Manual - 8,000 lbs.
Fan	27" diameter
Hoist	Single Cylinder scissor Hoist

OPTIONS

1. 120 h.p. Tier 4, liquid-cooled diesel-powered engine
2. 95 or 190 gallon dust control system with one electric pump & three nozzles
3. Hydraulic jack
4. Electric hydraulic valve controls
5. Directional light bar / L.E.D. flashers
6. 16" diameter pickup hose with 3 - function hydraulically controlled pickup arm
7. Camera System

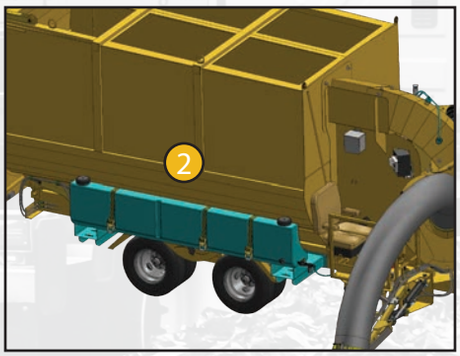

Titan LEAF™ SOLUTIONS

www.bonnell.com • (800) 851-9664 • info@bonnell.com
1385 Franklin Grove Rd. • Dixon, IL 61021

AUTHORIZED DEALER:

REV. AUGUST 2019

SPARTAN LEAF PRO PLUS

EQUIPMENT FEATURES:

- Safety interlock system on intake nozzle
- 50 gallon fuel tank
- Heavy duty direct drive fan
- 14,000 - pound 3" adjustable pintle eye with safety chain
- 74 h.p. Tier 4, liquid-cooled diesel-powered engine
- Manual jack, fire extinguisher, and wheel chocks
- 15 - 30 yd. collection body with full tailgate
- DOT - compliant lighting, markings, and yellow flashers
- 12-volt battery with electrical system
- 12,000 - pound axles with electric trailer brakes
- Emergency stop switch
- Proportional electric hydraulic valve controls
- 16" diameter pickup hose with 3-function hydraulically controlled pickup arm (optional)

Shown with optional

Spartan LEAF PRO+™

HGACBuy
THE SMART PURCHASING SOLUTION

SPECIFICATIONS

Capacity and Empty Weight	15 cu. yard - 11,000 lbs. 20 cu. yard - 11,500 lbs. 25 cu. yard - 13,000 lbs 30 cu. yard - 13,500 lbs.
Fuel Tank	50 U.S. Gallons
Engine	74 h.p. Tier 4, liquid-cooled diesel-powered engine
Jack	Manual - 8,000 lbs.
Battery	12 Volt - 1190 Amp - 950 CCA
Axles	Tandem 12,000 Axles with duel wheels
Tires	ST235/80R16, Load E
Fan	27" diameter
Hoist	Single Cylinder Scissor Hoist

OPTIONS

1. 120 h.p. Tier 4, liquid-cooled diesel-powered engine
2. 95 or 190 gallon dust control system with one pump & three nozzles
3. Dual hydraulic jack
4. Wireless control box
5. Directional light bar / L.E.D. flashers
6. Direct wired control into cab of truck
7. Closed-circuit camera system

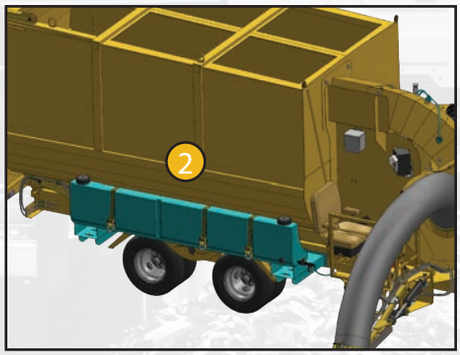

Titan LEAF™ SOLUTIONS

www.bonnell.com • (800) 851-9664 • info@bonnell.com
1385 Franklin Grove Rd. • Dixon, IL 61021

AUTHORIZED DEALER:

REV. AUGUST 2019

TITAN LEAF PRO

EQUIPMENT FEATURES:

- Dual safety interlock system on intake nozzle & belt guard
- Manual jack, fire extinguisher, wheel chocks
- 5 - belt drive system with 30" balanced fan
- DOT compliant lighting, markings, and yellow flashers
- 74 hp diesel-powered, liquid cooled engine
- 12 Volt battery with electrical system
- 16" diameter discharge nozzle
- 7,000 - pound axle with electric trailer brakes
- 50 gallon fuel tank
- 14,000 - pound 3" adjustable pintle eye with safety chains

Shown with options

Titan LEAF™ PRO

HGACBuy
THE SMART PURCHASING SOLUTION

SPECIFICATIONS

Weight, Base Model	5,900 lbs.
Fuel Tank, Aluminum	50 U.S. Gallons
Engine	74 hp Tier 4, liquid-cooled diesel-powered engine
Collection Nozzles	Right-side
Parking Jack	Manual
Battery	12 Volt, 1190 Amp; 950 CCA
Axle	7,000 lb with electric brakes
Tires	ST235/80R16, load range E
Fan	30" diameter
Belts (five)	5VX

OPTIONS

1. 100 gallon dust control system
2. Directional light bar / L.E.D. flashers
3. Strobe lights
4. 32" diameter fan
5. Camera system
6. Trans-fluid coupler in lieu of standard clutch
7. Fixed or manual swivel discharge nozzle
8. Left side collection nozzle build
9. Spare tire and wheel
10. Hydraulic jack with swivel caster wheel

Titan LEAF™ SOLUTIONS

www.bonnell.com • (800) 851-9664 • info@bonnell.com
1385 Franklin Grove Rd. • Dixon, IL 61021

AUTHORIZED DEALER:

REV. AUGUST 2019

TITAN LEAF PRO PLUS

EQUIPMENT FEATURES:

- Dual safety interlock system on intake nozzle & belt guard
- DOT compliant lighting, markings, and yellow flashers
- 5 - belt drive system with 30" fan
- 12 Volt battery
- 74 h.p. Tier 4, liquid-cooled diesel-powered engine
- 7,000 - pound axle with electric trailer brakes
- 14,000 - pound 3" adjustable pintle eye with safety chain
- 50 gallon fuel tank
- Manual jack, fire extinguisher, wheel chocks
- 16" diameter pickup hose with 3 - function hydraulically controlled pickup arm

Titan LEAF PRO +™

Shown with options

HGACBuy
THE SMART PURCHASING SOLUTION

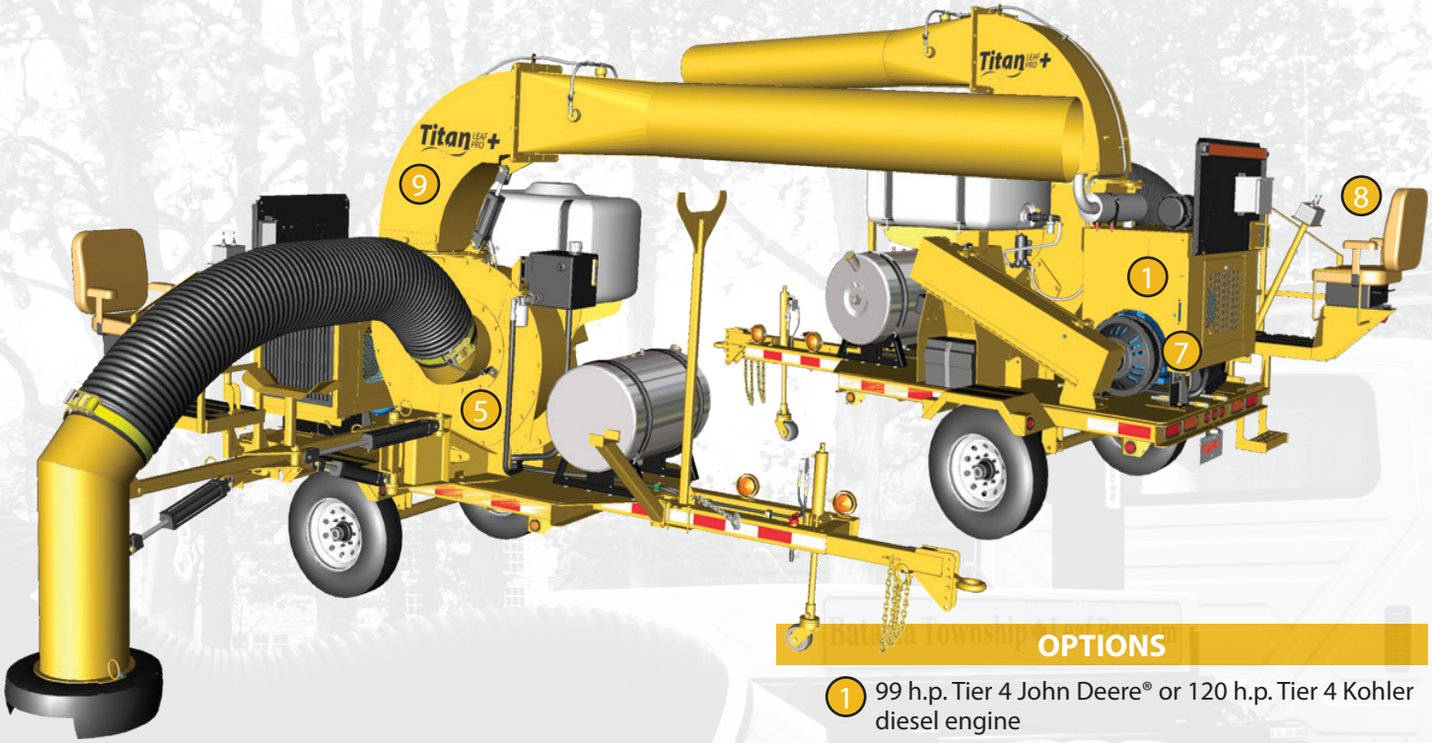

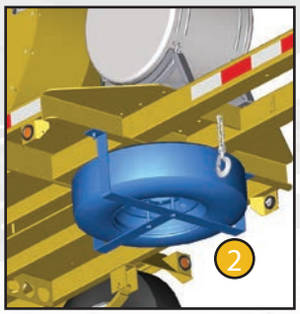

OPTIONS

1. 99 h.p. Tier 4 John Deere® or 120 h.p. Tier 4 Kohler diesel engine
2. Spare tire
3. Dust control system (if equipped) 100 U.S. gallons
4. Electric over hydraulic valve controls
5. 32" diameter fan
6. Proportional controls for collection nozzle
7. Trans-fluid coupler in lieu of standard clutch
8. Ride on seat / swivel caster wheel for jack
9. Fixed or manual swivel discharge nozzle
10. Wire pendent for walk-beside control
11. Left - side collection nozzle build
12. Wireless control box
13. Hydraulic jack with swivel caster wheel
14. Direct wired control into cab of truck
15. Directional light bar / L.E.D. flashers
16. Closed circuit camera system

SPECIFICATIONS

Weight, Base Model	6,200 lbs.
Fuel Tank, Aluminum	50 U.S. gallons
Hydraulic Tank Only	7 U.S. gallons
Engine	74 h.p. Tier 4, liquid-cooled diesel-powered engine
Collection Nozzle	Right-side
Parking Jack	Manual
Battery	12 Volt, 1190 Amp; 950 CCA
Axle	7,000 lb. with electric brakes
Tires	ST235/80R16, load range E
Fan	30" diameter
Belts (five)	5VX

Titan LEAF™ SOLUTIONS

www.bonnell.com • (800) 851-9664 • info@bonnell.com
1385 Franklin Grove Rd. • Dixon, IL 61021

AUTHORIZED DEALER:

REV. AUGUST 2019

CONTRACT # 071B7700091 - AWARDED SPECIFICATIONS FOR PURCHASE				
Spec #	EQUIPMENT MAKE & MODEL:	EQUIPMENT CATEGORY	Quoted Price	Hourly rate for training (per Schedule A, Statement of Work, section A.,3.3)
22	C62-0051-16 Street Sweeper - Elgin/Autocar	Sweeper	$324,516.75	$100.00
NON-AWARDED SPECIFICATIONS FOR PURCHASE				
21	C60-2001-16 Sand-Salt Spreader - Epoke 4902	SPREADER	$109,784.00	$100.00

Catalog Pricing For PURCHASE

Epoke Spreaders

Item #	EQUIPMENT MAKE & MODEL:	EQUIPMENT CATEGORY	MSRP	% Discount Off MSRP	Discount	Set-Up Fees	Total Cost (With setup & delivery included)
	BULK SPREADERS						
1	Epoke 3800 SMALL	SPREADER	68,130.00	3%	$ 2,043.90	4,500.00	$ 70,586.10
2	Epoke 3800 MEDIUM	SPREADER	71,685.00	3%	$ 2,150.55	4,500.00	$ 74,034.45
3	Epoke 3800 LARGE	SPREADER	74,525.00	3%	$ 2,235.75	4,500.00	$ 76,789.25
4	Epoke 3800 2T SMALL	SPREADER	88,690.00	3%	$ 2,660.70	4,500.00	$ 90,529.30
5	Epoke 3800 2T MEDIUM	SPREADER	92,245.00	3%	$ 2,767.35	4,500.00	$ 93,977.65
6	Epoke 3800 2T LARGE	SPREADER	95,085.00	3%	$ 2,852.55	4,500.00	$ 96,732.45
7	Epoke 4900 SMALL	SPREADER	72,280.00	3%	$ 2,168.40	4,500.00	$ 74,611.60
8	Epoke 4900 MEDIUM	SPREADER	75,415.00	3%	$ 2,262.45	4,500.00	$ 77,652.55
9	Epoke 4900 LARGE	SPREADER	76,905.00	3%	$ 2,307.15	4,500.00	$ 79,097.85
10	Epoke 4902 SMALL	SPREADER	84,550.00	3%	$ 2,536.50	4,500.00	$ 86,513.50
11	Epoke 4902 MEDIUM	SPREADER	87,685.00	3%	$ 2,630.55	4,500.00	$ 89,554.45
12	Epoke 4902 LARGE	SPREADER	89,175.00	3%	$ 2,675.25	4,500.00	$ 90,999.75
13	Epoke Virtus 1,980 Gallon	SPREADER	97,710.00	3%	$ 2,931.30	6,500.00	$ 101,278.70
14	Epoke Virtus 2,640 Gallon	SPREADER	102,260.00	3%	$ 3,067.80	6,500.00	$ 105,692.20
15	Epoke Virtus 3,300 Gallon	SPREADER	106,810.00	3%	$ 3,204.30	6,500.00	$ 110,105.70
16	Epoke Virtus 4,000 Gallon	SPREADER	111,360.00	3%	$ 3,340.80	6,500.00	$ 114,519.20
17	Epoke Virtus 4,600 Gallon	SPREADER	117,555.00	3%	$ 3,526.65	6,500.00	$ 120,528.35
18	Epoke Virtus AST Kit	SPREADER	49,625.00	3%	$ 1,488.75	6,500.00	$ 54,636.25
19	Epoke Virtus City AST Kit	SPREADER	60,180.00	3%	$ 1,805.40	6,500.00	$ 64,874.60
20	Epoke Igloo 2300 - 1.0 Yard	SPREADER	20,845.00	3%	$ 625.35	6,500.00	$ 26,719.65
21	Epoke Igloo 2300 - 1.4 Yard	SPREADER	22,180.00	3%	$ 665.40	4,500.00	$ 26,014.60
22	Epoke Igloo 2300 - 1.8 Yard	SPREADER	23,520.00	3%	$ 705.60	4,500.00	$ 27,314.40
23	Epoke Igloo 2400 - .8 Yard	SPREADER	27,785.00	3%	$ 833.55	4,500.00	$ 31,451.45
24	Epoke Igloo 2400 - 1.0 Yard	SPREADER	29,140.00	3%	$ 874.20	4,500.00	$ 32,765.80
25	Epoke Igloo 2400 - 1.4 Yard	SPREADER	30,475.00	3%	$ 914.25	4,500.00	$ 34,060.75
26	Epoke Igloo 2400 - 1.8 Yard	SPREADER	31,825.00	3%	$ 954.75	4,500.00	$ 35,370.25
	TOWED SPREADERS						
27	Epoke Mini 5	SPREADER	1,360.00	5%	$ 68.00	$0.00	$ 1,292.00
28	Epoke Mini 20	SPREADER	3,170.00	5%	$ 158.50	$0.00	$ 3,011.50
29	Epoke ITM35	SPREADER	5,575.00	5%	$ 278.75	$0.00	$ 5,296.25
30	Epoke ITM45	SPREADER	8,020.00	5%	$ 401.00	$0.00	$ 7,619.00
31	Epoke ITM60	SPREADER	8,370.00	5%	$ 418.50	$0.00	$ 7,951.50
32	Epoke PM1.4	SPREADER	5,940.00	5%	$ 297.00	$0.00	$ 5,643.00
33	Epoke PMH1.4	SPREADER	5,185.00	5%	$ 259.25	$0.00	$ 4,925.75
34	Epoke SKE8	SPREADER	17,135.00	5%	$ 856.75	$0.00	$ 16,278.25
35	Epoke SKE15	SPREADER	22,810.00	5%	$ 1,140.50	$0.00	$ 21,669.50
36	Epoke SKE20	SPREADER	24,670.00	5%	$ 1,233.50	$0.00	$ 23,436.50
37	Epoke TKB12-280	SPREADER	22,375.00	5%	$ 1,118.75	$0.00	$ 21,256.25
38	Epoke TMK10-275	SPREADER	19,175.00	5%	$ 958.75	$0.00	$ 18,216.25
39	Epoke PSL 6.5	SPREADER	11,590.00	5%	$ 579.50	$0.00	$ 11,010.50
40	Epoke TP3	SPREADER	29,275.00	5%	$ 1,463.75	$0.00	$ 27,811.25

41	Epoke TP9	SPREADER	33,895.00	5%	$ 1,694.75	$0.00	$ 32,200.25

NOTES:

1. Price is for base unit only. See Schedule C1 for Epoke brochures.

2. Prices do not include any option content. See ***Schedule E2*** *for Epoke option pricing. All option pricing is subject to the 3% and 5% discount.*

3. Set-Up Fees are for mounting and installation on customer supplied chassis, where applicable.

Elgin Sweepers

Item #	EQUIPMENT MAKE & MODEL:	EQUIPMENT CATEGORY	MSRP	% Discount Off MSRP	Discount	Set-Up Fees & Delivery	Total Cost (With setup & delivery included)
42	Elgin Pelican - Single	SWEEPER	198,000.00	3%	$ 5,940.00	$1,270.70	$ 193,330.70
43	Elgin Pelican - Dual	SWEEPER	209,375.00	3%	$ 6,281.25	$1,270.70	$ 204,364.45
44	Elgin Waterless Pelican	SWEEPER	255,000.00	3%	$ 7,650.00	$1,270.70	$ 248,620.70
45	Elgin Broom Bear (Purchase of this item is for MDOT Only)	SWEEPER	161,840.00	10%	$ 16,184.00	$1,270.70	$ 146,926.70
46	Elgin Road Wizard	SWEEPER	187,555.00	3%	$ 5,626.65	$1,270.70	$ 183,199.05
47	Elgin Broom Badger	SWEEPER	140,065.00	3%	$ 4,201.95	$1,270.70	$ 137,133.75
48	Elgin Eagle	SWEEPER	181,050.00	3%	$ 5,431.50	$1,270.70	$ 176,889.20
49	Elgin Waterless Eagle (Purchase of this item is for MDOT Only)	SWEEPER	226,695.00	10%	$ 22,669.50	$1,270.70	$ 205,296.20
50	Elgin Whirlwind - Single	SWEEPER	163,250.00	3%	$ 4,897.50	$1,270.70	$ 159,623.20
51	Elgin Whirlwind - Dual	SWEEPER	177,750.00	3%	$ 5,332.50	$1,270.70	$ 173,688.20
52	Elgin Whirlwind 1 - Single	SWEEPER	163,250.00	3%	$ 4,897.50	$1,270.70	$ 159,623.20
53	Elgin Whirlwind 1 - Dual	SWEEPER	177,750.00	3%	$ 5,332.50	$1,270.70	$ 173,688.20
54	Elgin Crosswind (Purchase of this item is for MDOT Only)	SWEEPER	136,125.00	10%	$ 13,612.50	$1,270.70	$ 123,783.20
55	Elgin Crosswind 1	SWEEPER	102,375.00	3%	$ 3,071.25	$1,270.70	$ 100,574.45
56	Regen X	SWEEPER	120,250.00	3%	$ 3,607.50	$1,270.70	$ 117,913.20
57	Elgin Megawind, 10CY, CB Cleaner Only* (Purchase of this item is for MDOT Only)	SWEEPER	167,125.00	10%	$ 16,712.50	$1,270.70	$ 151,683.20
58	Elgin Megawind, 10CY - Single* (Purchase of this item is for MDOT Only)	SWEEPER	193,000.00	10%	$ 19,300.00	$1,270.70	$ 174,970.70
59	Elgin Megawind, 10CY - Dual* (Purchase of this item is for MDOT Only)	SWEEPER	209,605.00	10%	$ 20,960.50	$1,270.70	$ 189,915.20
60	Elgin Megawind, 13CY, CB Cleaner Only* (Purchase of this item is for MDOT Only)	SWEEPER	173,625.00	10%	$ 17,362.50	$1,270.70	$ 157,533.20
61	Elgin Megawind, 13CY - Single* (Purchase of this item is for MDOT Only)	SWEEPER	199,625.00	10%	$ 19,962.50	$1,270.70	$ 180,933.20
62	Elgin Megawind, 13CY - Dual* (Purchase of this item is for MDOT Only)	SWEEPER	217,500.00	10%	$ 21,750.00	$1,270.70	$ 197,020.70

NOTES:

1. Price is for sweeper module only. Does not include truck chassis, if applicable. See Schedule C2 for Elgin brochures.

2. Prices do not include any option content. See ***Schedule E3*** *for Elgin option pricing. All option pricing is subject to the 3% discount.*

Addco Equipment

Item #	EQUIPMENT MAKE & MODEL:	EQUIPMENT CATEGORY	Discount Pricing	Set-Up Fees	Total Cost (With setup & delivery included)
#REF!	Addco PTS-2000 Portable Traffic Signal System	Portable Traffic Signal	74,100.00	NA	$74,100.00
	OPTIONS				
69	Doppler radar motion sensors (TC26B) (PTS-2000 only)		2,400.00	Included	$2,400.00
70	GPS monitoring system (PTS-2000 only)		1,400.00	Included	$1,400.00
71	Yearly monitoring fee for GPS system (PTS-2000 only)		400.00	Included	$400.00

NOTES:

1. See Schedule C4 for Addco brochures.

Heil Construction Equipment

Item #	EQUIPMENT MAKE & MODEL:	EQUIPMENT CATEGORY	MSRP	% Discount Off MSRP	Discount	Set-Up Fees	Total Cost (With setup & delivery included)
72	Heil Half Pack Commercial Front Loader - 28CY		120,020.00	4%	$ 4,800.80	Included	$ 115,219.20
73	Heil Half Pack Commercial Front Loader - 32CY		123,609.00	4%	$ 4,944.36	Included	$ 118,664.64
74	Heil Half Pack Odyssey Residential FL - 20CY		137,166.00	4%	$ 5,486.64	Included	$ 131,679.36
75	Heil Half Pack Odyssey Residential FL - 23CY		136,499.00	4%	$ 5,459.96	Included	$ 131,039.04
76	Heil Half Pack Odyssey Residential FL - 28CY		137,166.00	4%	$ 5,486.64	Included	$ 131,679.36
77	Heil Half Pack Odyssey Commercial FL - 28CY		133,470.00	4%	$ 5,338.80	Included	$ 128,131.20
78	Heil Half Pack Odyssey Commercial FL - 32CY		137,104.00	4%	$ 5,484.16	Included	$ 131,619.84
79	Heil PT1000 Rear Loader - 13CY		55,529.00	4%	$ 2,221.16	Included	$ 53,307.84
80	Heil PT1000 Rear Loader - 16CY		57,364.00	4%	$ 2,294.56	Included	$ 55,069.44
81	Heil PT1000 Rear Loader - 18CY		58,902.00	4%	$ 2,356.08	Included	$ 56,545.92
82	Heil PT1000 Rear Loader - 20CY		60,716.00	4%	$ 2,428.64	Included	$ 58,287.36
83	Heil PT1000 Rear Loader - 25CY		64,134.00	4%	$ 2,565.36	Included	$ 61,568.64
86	Heil DP5000 Rear Loader - 25CY		72,473.00	4%	$ 2,898.92	Included	$ 69,574.08
87	Heil DP5000 Rear Loader - 27CY		74,149.00	4%	$ 2,965.96	Included	$ 71,183.04
88	Heil DP5000 Rear Loader - 32CY		77,295.00	4%	$ 3,091.80	Included	$ 74,203.20
89	Heil PT Commercial Rear Loader - 25CY		79,586.00	4%	$ 3,183.44	Included	$ 76,402.56
90	Heil PT Commercial Rear Loader - 27CY		81,236.00	4%	$ 3,249.44	Included	$ 77,986.56
91	Heil PT Commercial Rear Loader - 32CY		84,301.00	4%	$ 3,372.04	Included	$ 80,928.96
92	Heil PT Commercial Plus Rear Loader - 25CY		96,365.00	4%	$ 3,854.60	Included	$ 92,510.40
93	Heil PT Commercial Plus Rear Loader - 27CY		98,021.00	4%	$ 3,920.84	Included	$ 94,100.16
94	Heil PT Commercial Plus Rear Loader - 32CY		99,676.00	4%	$ 3,987.04	Included	$ 95,688.96
95	Heil Rapid Rail Automated Side Loader - 16CY		114,356.00	4%	$ 4,574.24	Included	$ 109,781.76
96	Heil Rapid Rail Automated Side Loader - 20CY		116,514.00	4%	$ 4,660.56	Included	$ 111,853.44
97	Heil Rapid Rail Automated Side Loader - 22CY		117,590.00	4%	$ 4,703.60	Included	$ 112,886.40
98	Heil Rapid Rail Automated Side Loader - 24CY		118,677.00	4%	$ 4,747.08	Included	$ 113,929.92
99	Heil Rapid Rail Automated Side Loader - 26CY		119,768.00	4%	$ 4,790.72	Included	$ 114,977.28
100	Heil Rapid Rail Automated Side Loader - 30CY		121,926.00	4%	$ 4,877.04	Included	$ 117,048.96
101	Heil Rapid Rail Automated Side Loader - 32CY		124,300.00	4%	$ 4,972.00	Included	$ 119,328.00
102	Heil DP Rapid Rail Automated Side Loader - 22CY		130,996.00	4%	$ 5,239.84	Included	$ 125,756.16
103	Heil DP Rapid Rail Automated Side Loader - 24CY		132,077.00	4%	$ 5,283.08	Included	$ 126,793.92
104	Heil DP Rapid Rail Automated Side Loader - 26CY		134,239.00	4%	$ 5,369.56	Included	$ 128,869.44
105	Heil DP Rapid Rail Automated Side Loader - 28CY		135,320.00	4%	$ 5,412.80	Included	$ 129,907.20
106	Heil DP Rapid Rail Automated Side Loader - 33CY		138,573.00	4%	$ 5,542.92	Included	$ 133,030.08
107	Heil DP Python Automated Side Loader - 22CY		122,473.00	4%	$ 4,898.92	Included	$ 117,574.08
108	Heil DP Python Automated Side Loader - 24CY		123,553.00	4%	$ 4,942.12	Included	$ 118,610.88
109	Heil DP Pyhton Automated Side Loader - 26CY		125,684.00	4%	$ 5,027.36	Included	$ 120,656.64
110	Heil DP Python Automated Side Loader - 28CY		126,765.00	4%	$ 5,070.60	Included	$ 121,694.40
111	Heil DP Python Automated Side Loader - 33CY		129,962.00	4%	$ 5,198.48	Included	$ 124,763.52

112	Heil Multi Pack Automated Side/Rear Loader - -24CY		167,506.00	4%	$ 6,700.24	Included	$ 160,805.76
113	Heil DP 4060 Split Rear Loader - 25CY		174,570.00	4%	$ 6,982.80	Included	$ 167,587.20

NOTES:

1. Prices do not include truck chassis.

2. Prices are for base body only and do not include any option content or mounting costs. See ***Schedule E5*** *for Heil option and mounting/installation costs. All options are subject to the 4% discount.*

3. See Schedule C5 for Heil brochures.

Envirosight Inspection Cameras

Item #	EQUIPMENT MAKE & MODEL:	EQUIPMENT CATEGORY	MSRP	% Discount Off MSRP	Discount	Set-Up Fees	Total Cost (With setup & delivery included)
123	Envirosight Rovver X Basic Truck Package		76,226.50	2%	$ 1,524.53	NA	$ 74,701.97
124	Envirosight Rovver X Pro Truck Package		83,230.00	2%	$ 1,664.60	NA	$ 81,565.40
126	Envirosight Rovver X Basic Truck Package with RX400 Crawler		101,500.00	2%	$ 2,030.00	NA	$ 99,470.00
127	Envirosight Stand alone RXSAT 2020 System with RAX300 Cable Reel		127,500.00	2%	$ 2,550.00	NA	$ 124,950.00
128	Envirosight Verisght Pro PLUS Push Camera - 200		9,850.00	2%	$ 197.00	NA	$ 9,653.00
129	Envirosight Verisight Pro PLUS Push Camera - 330		10,850.00	2%	$ 217.00	NA	$ 10,633.00
130	Envirosight 30' Quickview Air HD Camera		15,500.00	2%	$ 310.00	NA	$ 15,190.00
133	Envirosight 8" Jetscan 2.0 HD Video Nozzle with 15" Rollers		13,500.00	2%	$ 270.00	NA	$ 13,230.00
133.1	Envirosight CleverScan Manhole Camera		71,050.00	2%	$ 1,421.00	NA	$ 69,629.00
134	Envirosight Rovver X RXSAT 2020 Add On System		106,000.00	2%	$ 2,120.00	NA	$ 103,880.00
135	Enviroisght Rovver X & RXSAT 2020 Add on System		160,000.00	2%	$ 3,200.00	NA	$ 156,800.00

NOTES:

1. Prices do not include any option content. See ***Schedule E6*** *for Envirosight option pricing. All option pricing is subject to the 2% discount.*

2. See Schedule C6 for Envirosight brochures.

Trackless Municipal Tractor

Item #	EQUIPMENT MAKE & MODEL:	EQUIPMENT CATEGORY	MSRP	% Discount Off MSRP	Discount	Set-Up Fees	Total Cost (With setup & delivery included)
137	Trackless Series MT7 Articulated Tractor		132,403.00	5%	$ 6,620.15	Included	$ 125,782.85

NOTES:

1. Price is for tractor only and does not include any option content. See ***Schedule E7*** *for Trackless option pricing. All options are subject to the 5% discount.*

2. See Schedule C7 for Trackless brochures.

Bonnell Vac

Item #	EQUIPMENT MAKE & MODEL:	EQUIPMENT CATEGORY	MSRP	% Discount Off MSRP	Discount	Set-Up Fees	Total Cost (With setup & delivery included)
138	Titan Leaf Loader		45,557.69	1%	$ 455.58	$750.00	$ 45,852.11
139	Titan Pro Plus Leaf Loader		59,543.60	1%	$ 595.44	$750.00	$ 59,698.16
140	Spartan Leaf Collector - 15 Cubic Yard		68,804.00	1%	$ 688.04	$750.00	$ 68,865.96
141	Spartan Leaf Collector - 20 Cubic Yard		71,089.00	1%	$ 710.89	$750.00	$ 71,128.11
142	Spartan Leaf Collector - 25 Cubic Yard		73,437.00	1%	$ 734.37	$750.00	$ 73,452.63
143	Spartan Leaf Collectot - 30 Cubic Yard		75,808.00	1%	$ 758.08	$750.00	$ 75,799.92
144	Spartan Pro Plus Leaf Collector - 15 Cubic Yard		82,790.00	1%	$ 827.90	$750.00	$ 82,712.10
145	Spartan Pro Plus Leaf Collector - 20 Cubic Yard		85,075.00	1%	$ 850.75	$750.00	$ 84,974.25
146	Spartan Pro Plus Leaf Collector - 25 Cubic Yard		87,423.00	1%	$ 874.23	$750.00	$ 87,298.77
147	Spartan Pro Plus Leaf Collector - 30 Cubic Yard		89,794.00	1%	$ 897.94	$750.00	$ 89,646.06

NOTES:

1. Price is for base unit only and does not include any option content.

*2. See **Schedule E8** for Bonnell option pricing. All options are subject to the 1% discount with the exception of leaf collection boxes which are subject to a 2% discount.*

3. See Schedule C8 for Bonnell brochures.

Cargill Brine Making

Item #	EQUIPMENT MAKE & MODEL:	EQUIPMENT CATEGORY	Discount Pricing	Set-Up Fees	Total Cost (With setup & delivery included)
148	Accurbrine NXT	Brine Making	59,000.00	4,500.00	63,500.00
149	Accubrine NXT with Truck Fill	Brine Making	81,500.00	4,500.00	86,000.00
150	Accubrine NXT with Truck Fill & 1 Additive	Brine Making	94,000.00	4,500.00	98,500.00
151	Accubrine NXT with Truck Fill & 2 Additives	Brine Making	101,000.00	4,500.00	105,500.00
152	Accurbrine NXT with Truck Fill & 3 Additives	Brine Making	108,000.00	4,500.00	112,500.00
153	Stand Alone Truck Fill	Brine Making	46,000.00	4,500.00	50,500.00
154	Stand Alone Truck Fill & 1 Additive	Brine Making	53,000.00	4,500.00	57,500.00
155	Stand Alone Truck Fill & 2 Additives	Brine Making	60,000.00	4,500.00	64,500.00
156	Stand Alone Truck Fill & 3 Additives	Brine Making	67,500.00	4,500.00	72,000.00
157	Accubatch	Brine Making	29,000.00	4,500.00	33,500.00

NOTES:

*1. All pricing is for base unit only and does not include any option content. See **Schedule E9** for Cargill option pricing.*

2. See Schedule C9 for Cargill brochures.

3. Set-up fees are for brine maker installation and hook-up, if applicable. Customer reserves the right to provide their own installation and hook-up.

Epoke Price List: Sourcewell Contract

Epoke Bulk Spreaders

Sourcewell members are subject to a 3% discount on Epoke Bulk Spreaders.

Bulk Spreader models and technology included are: Igloo, S3800 AST, S4900/4902 Sirius Combi AST, Virtus and EpoSat

Model pricing sheets follow this page.

Pricing is effective 6-1-2018

All pricing is USD

FOB Destination. United States

EPOKE S3800/ 3800-2T SIRIUS AST

MSRP USD
FOB DESTINATION, NORTH AMERICA

Epoke S3800 Sirius AST road speed related truck mounted spreader (driven by truck mounted hydraulic system) with the following standard features and included options:

38XX	stainless steel agitator with replaceable steel spring fingers
38XX	stainless steel delivery roller with 8mm steel cams
38XX	soft rubber base & standard spring base and spring base adjustment
38XX	conveyor belt
38XX	galvanized feed funnel and inspection ladder
38XX	central placed grease points
608286	hydraulic fittings JIC – 12 pressure & return- Dealer to supply hydraulic hoses
606162	large distribution box with RS232
608362	EpoMaster III controller with RS232 & card reader
609609	ground speed adapter
425400	spout, stainless steel
38XX	wiring only for work light and wiring and beacon stems for two beacons
608569	hydraulic pressure gauge in machine house
608083	neutral gear
608XXX	liquid system including side tanks, liquid level indicator and autostop of liquid fill
608069	5 – 30% variable prewetting system
605605	shut off valve
608740	stainless steel liquid spout
38XX	safety grate 4" X 4" with 8 degree slope
608134	level indicator for dry material

Epoke S3800 Sirius AST **SMALL** hopper equipped as above with 2 X 245 gallon side tanks- select one of the following hopper options:

3830 SMALL 3m3 (4.0 cubic yard) ..... $ 68,130.00

3831 SMALL 3m3 + 1m3 (5.2 cubic yard) add ..... $ 1,705.00
3832 SMALL 3m3 + 2m3 (6.5 cubic yard) add ..... $ 2,060.00

Epoke S3800 Sirius AST **MEDIUM** hopper equipped as above with 2 X 310 gallon side tanks- select one of the following hopper options:

3840 MEDIUM 4m3 (5.2 cubic yard) ..... $ 71,685.00

3850 MEDIUM 4m3 + 1m3 (6.5 cubic yard) add ..... $ 1,705.00
3851 MEDIUM 4m3 + 2m3 (7.8 cubic yard) add ..... $ 2,060.00
3852 MEDIUM 4m3 + 3m3 (9.1 cubic yard) add ..... $ 2,415.00

Epoke S3800 Sirius AST **LARGE** hopper equipped as above with 2 X 405 gallon side tank- select one of the following hopper options:

3860 LARGE 6m3 (7.8 cubic yard) ..... $ 74,525.00

3870 LARGE 6m3 + 1m3 (9.1 cubic yard) add ..... $ 1,705.00
3871 LARGE 6m3 + 2m3 (10.4 cubic yard) add ..... $ 2,060.00
3872 LARGE 6m3 + 3m3 (11.7 cubic yard) add ..... $ 2,415.00

EPOKE S3800/ 3800-2T SIRIUS AST

MSRP USD
FOB DESTINATION, NORTH AMERICA

Select one of the following chute arrangements:

608272	Short chute arrangement for truck bed height 1072 - 1377 mm (42" to 54")
608271	Long chute arrangement for truck bed height 1415 – 1770 mm (55" to 70")

Paint: Spreaders are painted standard Epoke RAL 2011 orange. Other RAL colors are available at a Dealer net cost of $ 1,365.00 per order. This cost is for cleaning and changeover and is a total net *per order*- for one or multiple spreaders that are ordered at the same time.

Options:

608193 Front tank 265 gallon ..... $ 4,565.00

38XX Leg system (includes the following): ..... $ 7,940.00
608062 17 ton brackets; 608243 rubber protection bars on subframe; 608648 side marker/ flag; 608664 spring assist for rear legs; 608682 short console frame for front roller; 603992 multiplug kit; 38XX lateral guides

38XX Folding cover ..... $ 3,085.00

608748 'D' ring tie down kit- Dealer installed for 4 points at top corner of hopper/extension ..... $ 290.00

605423 Electric symmetry ..... $ 1,100.00

38XX Lighting includes LED Megabeam work light and two LED rotating orange beacons ..... $ 1,195.00

608665/ 609895 Frame mount kit includes 1 front pivot and 1 or 2 rear supports as required ..... $ 2,900.00

604577 Air temperature sensor ..... $ 405.00

603320 Proximity sensor for two plows ..... $ 810.00

609154 Extreme duty spinner disc and wings for sand use ..... $ 580.00

3800AST-2T Twin Spinner option (up to 80' spread width) add ..... $ 20,560.00

EPOKE S4900/ 4902 SIRIUS COMBI AST

MSRP USD
FOB DESTINATION, NORTH AMERICA

Epoke S4900 Sirius Combi AST road speed related truck mounted spreader (driven by truck mounted hydraulic system) with the following standard features and included options:

49XX	stainless steel agitator with replaceable steel spring fingers
49XX	stainless steel delivery roller with 8mm steel cams
49XX	soft rubber base & standard spring base and spring base adjustment
49XX	conveyor belt
49XX	galvanized feed funnel and inspection ladder
49XX	central grease bank
608953	hydraulic fittings JIC – 12 pressure & return- Dealer to supply hydraulic hoses
606162	large distribution box
608362	EpoMaster III controller with RS232 & card reader
609609	ground speed adapter
609026/27	wiring only for work light and wiring and beacon stems for two beacons
608765	hydraulic pressure gauge in machine house
608083	neutral gear
608XXX	auto stop fill, liquid level indicator and camlock coupling for liquid pump off
49XX	safety grate 4" X 4" with 8 degree slope
608134	level indicator for dry material

Epoke S4900 Sirius Combi AST **SMALL** hopper equipped as above with 2 X 245 gallon side tanks.
External front tanks are selected separately- see options below. Select one of the following hopper options:

4908 SMALL 3m3 (3.9 cubic yard) ..... $ 72,280.00
4910 SMALL 3m3 + 1m3 (5.2 cubic yard) add ..... $ 1,705.00
4912 SMALL 3m3 + 2m3 (6.5 cubic yard) add ..... $ 2,060.00

Epoke S4900 Sirius Combi AST **MEDIUM** hopper equipped as above with 2 X 310 gallon side tanks.
External front tanks are selected separately- see options below. Select one of the following hopper options:

4914 MEDIUM 6m3 (7.8 cubic yard) ..... $ 75,415.00
4914 MEDIUM 6m3 + 1m3 (9.1 cubic yard) add ..... $ 1,705.00

Epoke S4900 Sirius Combi AST **LARGE** hopper equipped as above with 2 X 405 gallon side tanks.
External front tanks are selected separately- see options below. Select one of the following hoppers:

4918 LARGE 6m3 (7.8 cubic yard) ..... $ 76,905.00
4919 LARGE 6m3 + 1m3 (9.1 cubic yard) add ..... $ 1,705.00
4920 LARGE 6m3 + 2m3 (10.4 cubic yard) add ..... $ 2,060.00
4921 LARGE 6m3 + 3m3 (11.7 cubic yard) add ..... $ 2,415.00

Select one of the following chute arrangements:

608774	Short chute arrangement for truck bed height 1072 - 1377 mm (42" to 54")
608773	Long chute arrangement for truck bed height 1415 – 1770 mm (55" to 70")

EPOKE S4900/ 4902 SIRIUS COMBI AST

MSRP USD
FOB DESTINATION, NORTH AMERICA

Paint: Spreaders are painted standard Epoke RAL 2011 orange. Other RAL colors are available at a Dealer net cost of $ 1,365.00 per order. This cost is for cleaning and changeover and is a total net *per order*- for one or multiple spreaders that are ordered at the same time.

Options:

External Front Tanks:
608193 265 gallon ..... $ 4,565.00
609337 460 gallon ..... $ 8,320.00
608844 660 gallon ..... $ 10,470.00
60933X 1,125 gallon ..... $ 14,775.00
608845 1,320 gallon ..... $ 14,775.00
60933X 1,785 gallon ..... $ 21,225.00
608846 1,980 gallon available on **SMALL** hopper only ..... $ 21,225.00
60933X 2,445 gallon available on **SMALL** hopper only ..... $ 27,680.00

49XX Leg system (includes the following): ..... $ 7,940.00
608062 17 ton brackets; 608243 rubber protection bars on subframe; 608648 side marker/ flag; 608664 spring assist for rear legs; 608682 short console frame for front roller; 603992 multiplug kit; 49XX lateral guides

49XX Folding cover ..... $ 3,085.00

608748 'D' ring tie down kit- Dealer installed for 4 points at top corner of hopper/extension ..... $ 290.00

605423 Electric symmetry ..... $ 1,100.00

49XX Lighting includes LED Megabeam work light and two LED rotating orange beacons ..... $ 1,195.00

608665/ 609895 Frame mount kit includes 1 front pivot and 1 or 2 rear supports as required ..... $ 2,900.00

604577 Air temperature sensor ..... $ 405.00

603320 Proximity sensor for two plows ..... $ 810.00

609154 Extreme duty spinner disc and wings for sand use ..... $ 580.00

4902 High Speed Combi includes the following features and operating specifications ..... $ 12,270.00

- 3800 spinner disc (in lieu of 4900 spinner disc) and 3 cylinder, 115 cc liquid pump
- a second 6 cylinder, 280cc liquid pump for straight liquid application
- 1.2 m (4') spray boom
- 11 Spratronic Nozzles (3 center deflector type nozzles; 4 left & 4 right pencil nozzles)
- liquid spray widths of 3 to 11 m (10' to 36') in 1m (3') increments
- liquid application rates of up to 75 gallons/minute speeds up to 55 mph

EPOKE VIRTUS AST LIQUID SPREADER

MSRP USD
FOB DESTINATION, NORTH AMERICA

Epoke Virtus AST road speed related truck mounted high speed liquid spreader (driven by truck mounted hydraulic system) with the following standard features and included options:

24XX	2 X 6 cylinder 280cc liquid pumps
24XX	11 Spratronic Nozzles- 3 centre deflector type nozzles and 4 left & right pencil nozzles on 2.5 meter (8') boom
608286	hydraulic fittings JIC – 12 pressure & return- Dealer to supply hydraulic hoses
606161/ 438685	standard distribution box & ground speed adapter
608362	EpoMaster III controller with RS232 & card reader

Epoke Virtus 'AST KIT' equipped as above (without machine house) for installation & connection to locally sourced tank and frame ..... $ 49,625.00

Epoke Virtus 'CITY AST' equipped as above (with machine house & installed sprayboom) for installation and connection to locally sourced tank and frame ..... $ 60,180.00

Epoke Virtus AST High Speed Liquid Spreader equipped as above with a subframe, machine house and modular frame & liquid tank system- select one of the following liquid hopper options:

3032 7500L (1,980 gallon) ..... $ 97,710.00
3033 10000L (2,640 gallon) ..... $ 102,260.00
3034 12500L (3,300 gallon) ..... $ 106,810.00
3035 15000L (4,000 gallon) ..... $ 111,360.00
3036 17500L (4,600 gallon) ..... $ 117,555.00

Paint: Spreaders are painted standard Epoke RAL 2011 orange. Other RAL colors are available at a Dealer net cost of $ 1,365.00 per order. This cost is for cleaning and changeover and is a total net *per order*- for one or multiple spreaders that are ordered at the same time.

Options:

608422 Liquid empty sensor ..... $ 515.00

608423 Auto-stop of liquid filling ..... $ 360.00

24XX Leg System with side rollers (includes the following) ..... $ 6,840.00
608062 17 ton brackets; 608243 rubber protection bars on subframe; 608648 side marker/ flag; 608664 spring assist for rear legs; 608682 short console frame for front roller & 603992 multiplug kit

24XX Lateral Guides in lieu of side rollers ..... $ 2,180.00

608748 'D' ring tie down kit- Dealer installed for 4 points at top corner of hopper/extension ..... $ 290.00

606162 Large Distribution box with RS232 ..... $ 920.00

24XX LED Megabeam work lights (1 installed at spray boom) ..... $ 365.00

24XX LED Megabeam work lights (2 installed at spray boom including wiring) ..... $ 770.00

24XX Beacon lighting including two LED rotating orange beacons ..... $ 830.00

604577 Air temperature sensor ..... $ 405.00

603320 Proximity sensor for two plows ..... $ 810.00

609892 Diesel engine/ hydraulic pump with fuel level indicator ..... $ 28,800.00

608777 Hose wand with 15m hose drum ..... $ 5,385.00

607000 JET Power option includes front mounted boom and nozzles ..... $ 22,770.00

EPOKE VIRTUS AST LIQUID SPREADER

MSRP USD
FOB DESTINATION, NORTH AMERICA

610163 JET Power hose wand with 20m hose drum.....$ 5,655.00

EPOKE IGLOO

MSRP USD
FOB DESTINATION, NORTH AMERICA

Epoke Igloo truck mounted spreader (driven by truck mounted hydraulic system) with the following standard features and included options:

2XXX	standard profiled conveyor belt
2XXX	SH- operation by vehicle hydraulics- Dealer to supply hydraulic hoses
2XXX	spreading disc
606161	standard distribution box
2XXX	standard controller: EpoSet for 2300; EpoBasic for 2400 only
438685	ground speed adapter (2400 only)
600XXX	wiring only for work light and one beacon
605663	manual spread symmetry (electric symmetry option available on S2400- see below)

Epoke Igloo S2300 (NOT road speed related) spreader equipped as above- select one of the following hopper options:

2470 0.8m3 (1.0 cubic yard) ..... $ 20,845.00
605106 0.15m3 (0.2 cubic yard) hopper extension for above ..... $ 660.00
605107 0.3m3 (0.4 cubic yard) hopper extension for above ..... $ 780.00

2471 1.1m3 (1.4 cubic yard) ..... $ 22,180.00
608019 0.3m3 (0.4 cubic yard) hopper extension for above ..... $ 875.00
605108 0.5m3 (0.65 cubic yard) hopper extension for above ..... $ 950.00

2472 1.4m3 (1.8 cubic yard) ..... $ 23,520.00
606491 0.2m3 (0.25 cubic yard) hopper extension for above ..... $ 895.00
605109 0.6m3 (0.8 cubic yard) hopper extension for above ..... $ 1,010.00

Epoke Igloo S2400 (road speed related) spreader equipped as above- select one of the following hopper options:

2485 0.6m3 (0.8 cubic yard) ..... $ 27,785.00
605107 0.2m3 (0.25 cubic yard) hopper extension for above ..... $ 720.00

2444 0.8m3 (1.0 cubic yard) ..... $ 29,140.00
605106 0.15m3 (0.2 cubic yard) hopper extension for above ..... $ 660.00
605107 0.3m3 (0.4 cubic yard) hopper extension for above ..... $ 780.00

2446 1.1m3 (1.4 cubic yard) ..... $ 30,475.00
608019 0.3m3 (0.4 cubic yard) hopper extension for above ..... $ 875.00
605108 0.5m3 (0.65 cubic yard) hopper extension for above ..... $ 950.00

2448 1.4m3 (1.8 cubic yard) ..... $ 31,825.00
606491 0.2m3 (0.25 cubic yard) hopper extension for above ..... $ 895.00
605109 0.6m3 (0.8 cubic yard) hopper extension for above ..... $ 1,010.00

EPOKE IGLOO

MSRP USD
FOB DESTINATION, NORTH AMERICA

Select one of the following chute arrangements:

249X	Short chute arrangement for truck bed height 700 - 800 mm (27.5" to 31.5")
249X	Medium chute arrangement for truck bed height 850 – 1200 mm (33.5" to 47")
249X	Long chute arrangement for truck bed height 1100 – 1500 mm (43.5" to 59")

Paint: Spreaders are painted standard Epoke RAL 2011 orange. Other RAL colors are available at a Dealer net cost of $ 1,365.00 per order. This cost is for cleaning and changeover and is a total net *per order*- for one or multiple spreaders that are ordered at the same time.

Options:

Liquid System- select one of the following: ..... $ 9,795.00
24XX Igloo 0.6m3 includes 2 X 114L (2 X 30 gallon) side tanks
24XX Igloo 0.8m3 includes 2 X 170L (2 X 45 gallon) side tanks
24XX Igloo 1.1m3 includes 4 X 114L (4 X 30 gallon) side tanks
24XX Igloo 1.4m3includes 2 X 170L & 2 X 114L (2 X 45 gallon & 2 X 30 gallon) side tanks
Each of the above include 606XXX prewetting system fixed at 30% & 605038 shut off valve
604175 Liquid level indicator ..... $ 515.00
608186 Auto-stop of liquid filling ..... $ 360.00

24XX Support leg system- long, side mounted (width is 2670 mm/ 8'9") ..... $ 3,200.00

24XX Safety Grate 50mm X 50mm (2" X 2") flat ..... $ 995.00

24XX Folding cover ..... $ 2,400.00

608362 EpoMaster III with RS232 & card reader (available on S2400 only) ..... $ 3,840.00

606162 Large Distribution box with RS232 (available on S2400 only) ..... $ 920.00

605298 Electric symmetry (available on S2400 only) ..... $ 1,350.00

24XX Lighting includes LED Megabeam work light & two LED beacons ..... $ 1,195.00

604577 Air temperature sensor (available on S2400 with EpoMaster III & large distribution box only) ..... $ 405.00

603320 Proximity sensor for two plows (available on S2400 with EpoMaster III & large distribution box only) $ 810.00

249X Engine/ hydraulic power (available on S2300 only) 5.5 HP Honda gas engine with manual start ..... $ 3,645.00

249X Engine/ hydraulic power (available on S2400 only) 9.0 HP Honda gas engine controlled by EpoBasic/ EpoMaster ..... $ 5,460.00

EPOSAT
GPS Controlled Spreading With Route Navigation

MSRP USD
FOB DESTINATION, NORTH AMERICA

Eposat GPS controlled automated spreading system with route navigation consists of two components- EpoSat office software package and an EpoSat hardware package to be installed on each spreader.

EpoSat Office Software Package

EpoSat office software package for installation on customer's PC:

- Includes a digital map displaying roads, road names, cities, forests, watercourses etc.
- Includes Omni Drive card reader and one EpoCard for reference route recording
- Includes 1 year license for EpoSat and digital mapping software
- PC requirements for EpoSat software installation: Pentium 4; Processor minimum 2.0 GHz (recommended 2.8 GHz); 256MB RAM; DVD Drive; 1 GB free space on hard drive; Color screen- 1024*768 resolution; Software: Windows 2000 or newer

606749 EpoSat office software package equipped as above for up to 50 spreaders/ 1 installation
Retail Price.....$ 15,700.00 each
606913 EpoSat office software package equipped as above for up to 100 spreaders/ 2 installations
Retail Price.....$ 14,370.00 each
606914 EpoSat office software package equipped as above for up to 150 spreaders/ 3 installations
Retail Price.....$ 13,065.00 each
606915 EpoSat office software package equipped as above for up to 200 spreaders/ 4 installations
Retail Price.....$ 11,765.00 each
606916 EpoSat office software package equipped as above for over 200 spreaders/ 5 installations (or more)
Retail Price.....$ 10,465.00 each

Optional Office Software Updates:
607806 annual (autumn release) update license for EpoSat software and digital map.....$ 4,055.00
607807 (if annual subscriptions are not purchased) update license for EpoSat software and digital map .....$ 11,255.00

EpoSat Hardware Package

EpoSat hardware package for installation on each spreader- spreader must be equipped with PWM hydraulic system and EpoMaster III with card reader. Kit includes: active GPS antenna kit, EpoSat GPS print, in cab route navigation box and installation when factory ordered on new spreaders.
Dealer installed on exiting spreaders- Dealer to quote labor for installation

600 # Varies by Model and Factory or Field Install- Contact ENAI for Ordering Information
EpoSat spreader hardware package
Retail Price.....$ 7,990.00 each***
***Spreaders may require upgrades (at additional cost) to take advantage of all of the latest EpoSat features. Provide serial number(s) to ENAI to request a quote for the required upgrade kit.

EpoSat Simulator Kit

EpoSat simulator kit for route set up and adjustment. Kit includes: active GPS antenna; distribution and white box with EpoSat GPS print; PWM and CPU boards; plug for 12 volt power point. EpoMaster III controller is required- but is not included
607767 EpoSat simulator kit.....$ 4,490.00

Epoke Price List: NJPA Contract

Epoke Towed Spreaders

NJPA members are subject to a 5% discount on Epoke Towed Spreaders.

Towed Spreaders models included are: EpoMini 5, EpoMini 20, ITM 35, ITM 45, ITM 60, PM 1.4, PMH 1.4, PSL 6.5, SKE8, SKE15, SKE20, TKB12-280, TMK10-275, TP3, and TP9.

Model pricing sheets follow this page.

****Minimum Order Quantity for EpoMini 5 is 4 units**

****Minimum Order Quantity for EpoMini 20 is 2 units**

EPOMINI 5

MSRP USD
FOB DESTINATION, NORTH AMERICA

EpoMini 5 manually operated road speed related spreader with the following standard features and included options:

1807 standard agitator
1807 rubber base
1807 spring base and spring base adjustment
1807 transmission
1807 delivery roller with 3mm cams
1807 pneumatic wheels

Retail Price.....$ 1,360.00

**Minimum order of 4 units

Technical Data:

Capacity:	50 liters	0.025 cubic yard
Total Width:	750 mm	29.5"
Spreading Width:	550 mm	22"
Weight:	30 kg	66 lbs

EPOMINI 20

MSRP USD
FOB DESTINATION, NORTH AMERICA

EpoMini 20 towed road speed related spreader with the following standard features and included options:

1821 standard agitator
1821 rubber base
1821 spring base and spring base adjustment
1821 transmission
1821 delivery roller with 3 mm double cams
1821 pneumatic wheels
1821 manually operated remote on/off

Retail Price.....$ 3,170.00

One of the following draw system options must also be selected:

600706 drawbar with 1 7/8" trailer ball coupling.....$ 515.00
600743 drawbar with 25 mm eye.....$ 290.00
600693 drawbar with 38mm eye.....$ 290.00
600744 drawbar with fork.....$ 290.00
600785 three point hitch bracket.....$ 685.00

**Minimum order of 2 units

Technical Data:

Capacity:	200 liters	0.26 cubic yard
Total Width:	1065 mm	42"
Spreading Width:	800 mm	31.5"
Weight:	75 kg	165 lbs

ITM 35

MSRP USD
FOB DESTINATION, NORTH AMERICA

Epoke ITM 35 road speed related towed spreader with the following standard features and included options:

1501	standard rubber base
1501	spring base and spring base adjustment
1501	transmission
1501	pneumatic wheels
600584	agitator
604121	delivery roller with 5 mm double cams

Retail Price.....$ 5,575.00

One of the following draw system options must also be selected:
600019 reversible drawbar with 1 7/8" trailer ball coupler and 50 mm eye.....$ 610.00
601461 three point hitch mount.....$ 1,460.00

Options (available as kits for Dealer install):
600030 lights.....$ 700.00
600028 electric remote control.....$ 1,985.00
600029 electric remote control and lights.....$ 2,685.00
600776 support leg.....$ 210.00

Technical Data:

Capacity:	350 liters	½ cubic yard
Total Width:	1150 mm	45"
Track Gauge:	1028 mm	40.5"
Spreading Width:	780 mm	31"
Weight:	145 kg	320 lbs

ITM 45

MSRP USD
FOB DESTINATION, NORTH AMERICA

Epoke ITM 45 road speed related towed spreader with the following standard features and included options:

1502	standard rubber base
1502	spring base and spring base adjustment
1502	pneumatic wheels
600962	transmission without reduction
600966	agitator
604087	delivery roller with 3 mm single cams

Retail Price ..... $ 8,020.00

One of the following draw system options must also be selected:
600019 reversible drawbar with 1 7/8" trailer ball coupler and 50 mm eye ..... $ 610.00
600024 lift truck fitting with support legs ..... $ 770.00
601189 three point hitch mount ..... $ 1,900.00

Options (available as kits for Dealer install):
600030 lights ..... $ 700.00
600028 electric remote control ..... $ 1,985.00
600029 electric remote control and lights ..... $ 2,685.00
600776 support leg ..... $ 210.00
605022 250L (1/3 cubic yard) hopper extension ..... $ 755.00

Technical Data:

Capacity:	450 liters	5/8 cubic yard
Total Width:	1435 mm	56.5"
Track Gauge:	1290 mm	51"
Spreading Width:	1010 mm	40"
Weight:	192 kg	423 lbs

ITM 60

MSRP USD
FOB DESTINATION, NORTH AMERICA

Epoke ITM 60 road speed related towed spreader with the following standard features and included options:

1503	standard rubber base
1503	spring base and spring base adjustment
1503	pneumatic wheels
600962	transmission without reduction
604131	delivery roller with 3 mm single cams
605211	agitator

Retail Price..... $ 8,370.00

One of the following draw system options must also be selected:
600019 reversible drawbar with 1 7/8" trailer ball coupler and 50 mm eye..... $ 610.00
600024 lift truck fitting with support legs ..... $ 770.00
601189 three point hitch mounting ..... $ 1,900.00

Options (available as kits for Dealer install):
600044 lights..... $ 700.00
600028 electric remote control ..... $ 1,985.00
600043 electric remote control and lights..... $ 2,685.00
600776 support leg..... $ 210.00

Technical Data:

Capacity:	600 liters	3/4 cubic yard
Total Width:	1895 mm	75"
Track Gauge:	1730 mm	68"
Spreading Width:	1460 mm	57.5"
Weight:	220 kg	485 lbs

PM1.4

MSRP USD
FOB DESTINATION, NORTH AMERICA

Epoke PM1.4 three-point hitch mounted, mechanically driven (by power take-off of tractor) spreader with the following standard features and included options:

3305	agitator
3305	safety grate
3305	standard rubber base
3305	spring base and spring base adjustment
432495	cardan shaft, 1 3/8" X 6 hub. Length = 310 mm (12")
604289	transmission, 540 RPM right
604295	delivery roller with 3 mm cams
604719	rubber edge for fine material

Retail Price.....$ 5,940.00

Options:
604292 hopper extension- 60 liter (0.08 cubic yard).....$ 600.00
605705 hopper extension- 140 liter (0.18 cubic yard).....$ 725.00

Technical Data:

Capacity:	140 liters	0.18 cubic yard
Total Width:	1091 mm	43"
Spreading Width:	1010 mm	40"
Weight:	91 kg	201 lbs

PMH1.4

MSRP USD
FOB DESTINATION, NORTH AMERICA

Epoke PMH1.4 three-point hitch mounted, hydraulically driven (by tractor hydraulics at a flow rate of 10 – 40 liters/minute) spreader with the following standard features and included options:

3307	agitator
3307	safety grate
3307	standard rubber base
3307	spring base and spring base adjustment
604295	delivery roller with 3 mm cams
604719	rubber edge for fine material

Retail Price.....$ 5,185.00

Select one of the following transmissions:

604410	transmission 30 liter (8 gallons)
605729	transmission 15 liter (4 gallons)

Options:
604292 hopper extension- 60 liter (0.08 cubic yard).....$ 600.00
605705 hopper extension- 140 liter (0.18 cubic yard).....$ 725.00

Technical Data:

Capacity:	140 liters	0.18 cubic yard
Total Width:	1091 mm	43"
Spreading Width:	1010 mm	40"
Weight:	85 kg	188 lbs

SKE 8

MSRP USD
FOB DESTINATION, NORTH AMERICA

Epoke SKE 8 road speed related towed spreader with the following standard features and included options:

1001	spring base and spring base adjustment
1001	transmission
200591	76 mm draweye
600219	agitator
600220	rubber base for salt
600224	solid support wheel
600969	24% reduction
601740	lights
601938	electric remote
604314	delivery roller with 8 mm double cams
606612	6.00 X 9 12 ply tires

Retail Price..... $ 17,135.00

Select one of the following drawbars:

600225	685 mm (27") drawbar
600226	1085 mm (43") drawbar

Options:
600231 second agitator shaft (Parts kit- Dealer Installed)..... $ 1,810.00

City Combi Liquid System (factory installed or as a kit to be retrofitted to existing SKE8's)
360 Liter (95 gallon) liquid tanks
Road speed related: 0- 20 km/h
Dry material, pre- wet material and straight liquid application capable

Retail Price..... $ 8,385.00

Technical Data:

Capacity:	750 liters	1.00 cubic yard
Total Width:	1285 mm	50.6"
Track Gauge:	790 mm	31"
Spreading Width (both dry & liquid):	1008 mm	40"
Weight:	400 kg	880 lbs

SKE 15

MSRP USD
FOB DESTINATION, NORTH AMERICA

Epoke SKE 15 road speed related towed spreader with the following standard features and included options:

1004	spring base and spring base adjustment
1004	transmission
1004	solid support wheel
200591	76 mm draweye
600154	rubber base for salt
600261	one-sided transmission
600267	24% reduction
601746	lights
601938	electric remote
601993	agitator
604336	delivery roller with 7 rows 3 mm single cams
605229	7.50 X 10 14 ply tires

Retail Price.....$ 22,810.00

Options:
600406 0.5m3 (0.65 cubic yard) hopper extension.....$ 785.00

Technical Data:

Capacity:	1.25 cubic meters	1.64 cubic yard
Total Width:	1665 mm	65.5"
Track Gauge:	1000 mm	31"
Spreading Width:	1390 mm	55"
Weight:	600 kg	1,323 lbs

SKE 20

MSRP USD
FOB DESTINATION, NORTH AMERICA

Epoke SKE 20 road speed related towed spreader with the following standard features and included options:

1005	spring base and spring base adjustment
1005	transmission
1005	solid support wheel
200591	76 mm draweye
600088	rubber base for salt
600261	one-sided transmission
600267	24% reduction
601750	lights
601938	electric remote
601994	agitator
604357	delivery roller with 7 rows 3 mm single cams
605229	7.50 X 10 14 ply tires

Retail Price.....$ 24,670.00

Technical Data:

Capacity:	1.65 cubic meters	2.16 cubic yard
Total Width:	2195 mm	86.4"
Track Gauge:	1530 mm	60"
Spreading Width:	1918 mm	75.5"
Weight:	720 kg	1,588 lbs

TKB12-280

MSRP USD
FOB DESTINATION, NORTH AMERICA

Epoke TKB12-280 road speed related towed spreader (spreads when driving forwards and backwards) with the following standard features and included options:

1108	transmission with 38% reduction
1108	spring base and spring base adjustment
1108	agitator
439226	rubber base for salt
600129	76 mm draweye
600878	rubber front edges, low
607741	guide chains, standard (2196 mm)
607994	rubber apron
607923	lights
601938	electric remote
603909	delivery roller with 3 mm double cams
606612	6.00 X 9 12 ply tires
603913	support wheel- solid

Retail Price.....$ 22,375.00

Options:
601592 Hopper Empty Sensor.....$ 480.00

Technical Data:

Capacity:	1.2 cubic meters	1.57 cubic yard
Total Width:	2800 mm	110.2"
Inside Hopper Width	2770 mm	109.1"
Track Gauge:	1800 mm	70.9"
Spreading Width:	2500 mm	98.4"
Weight:	710 kg	1,565 lbs

TMK10-275

MSRP USD
FOB DESTINATION, NORTH AMERICA

Epoke TMK10-275 road speed related towed spreader with the following standard features and included options:

1405	spring base and spring base adjustment
600129	76 mm draweye
600138	guide chains, standard
600142	rubber apron
600280	rubber base for sand
600296	agitator
600878	rubber front edges, low
601754	lights
601938	electric remote
604066	delivery roller with 5 mm double cams
604084	transmission with agitator
606612	6.00 X 9 12S tires

Retail Price.....$ 19,175.00

Options:
601592 Hopper Empty Sensor.....$ 480.00
600273 Lift Truck Bracket.....$ 950.00

Technical Data:

Capacity:	1.00 cubic meters	1.31 cubic yard
Total Width:	2750 mm	108.3"
Inside Hopper Width	2700 mm	106.3"
Track Gauge:	2332 mm	91.8"
Spreading Width:	2000 mm	78.8"
Weight:	400 kg	882 lbs

PSL 6.5

MSRP USD
FOB DESTINATION, NORTH AMERICA

Epoke PSL 6.5 three-point hitch mounted, hydraulically driven (by tractor hydraulic system) self loading spreader with the following standard features and included options:

3330	spring base and spring base adjustment
601664	delivery roller for cams
406985	5 mm cams
601646	rubber base for salt
439204	hydraulic system (without remote control) for double hydraulic connection to tractor

Retail Price ..... $ 11,590.00

Technical Data:

Capacity:	600 liters	¾ cubic yard
Total Width:	1980 mm	78"
Spreading Width:	1770 mm	70"
Weight:	315 kg	695 lbs

EPOKE TP SPREADER

MSRP USD
FOB DESTINATION, NORTH AMERICA

Epoke TP Series Drop and Broadcast Spreader road speed related 3 point hitch tractor mounted spreader (driven by tractor hydraulic system) with the following standard features and included options:

TPXX	Epoke principle with agitator and delivery roller with 5mm cams
TPXX	spring base
TPXX	stainless spreading disc assembly
TPXX	SH- operation by tractor hydraulics- Dealer to supply hydraulic hoses
TPXX	galvanized safety grate 50mm X 50mm (2" X 2") flat
TPXX	standard distribution box
TPXXX	EpoBasic controller
438685	ground speed adapter
TPXX	work light and road lights
TPXX	support legs
TPXX	electric symmetry

Epoke TP3 spreader equipped as above:
TP3 0.3m3 (0.4 cubic yard) dry material capacity .....$ 29,275.00
TP3XX liquid system 200L (53 gal) capacity, prewet fixed at 30% & liquid level indicator .....$ 6,700.00
TP3XX 0.1m3 (0.13 cubic yard) hopper extension .....$ 660.00
TP3XX 0.2m3 (0.25 cubic yard) hopper extension .....$ 795.00
TP3XX 0.3m3 (0.4 cubic yard) hopper extension .....$ 895.00

Epoke TP9 spreader equipped as above:
TP9 0.9m3 (1.2 cubic yard) dry material capacity .....$ 33,895.00
TP9XX liquid system 500L (132 gal) capacity, prewet fixed at 30% & liquid level indicator ...$ 8,035.00
TP9XX 0.3m3 (0.4 cubic yard) hopper extension .....$ 900.00
TP9XX 0.6m3 (0.8 cubic yard) hopper extension .....$ 1,105.00

Paint: Spreaders are painted standard Epoke RAL 2011 orange. Other RAL colors are available at a Dealer net cost of $ 1,435.00 per order. This cost is for cleaning and changeover and is a total net *per order*- for one or multiple spreaders that are ordered at the same time.

Options:

TP9X self-loading option (for TP9 only) from tractor hydraulic system .....$ 10,280.00

TPXX cover .....$ 1,080.00

TPXX PTO drive (in lieu of hydraulic supply from tractor) .....$ 3,560.00

MODEL: BROOM BADGER
EFFECTIVE DATE: 01/01/2020
SUPERSEDES ALL PREVIOUS PRICE LISTS
DEALER PRICE LIST (U.S. DOLLARS)
REV #

Purchase Order #	
Order Date:	
Delivery Date Requirment If Any:	

Ship To Address:
State Penalty Clause If Applicable:

QUANTITY	PART NUMBER	MODEL DESCRIPTION	2020 LIST PRICE	2020 EXTENDED
0	5801016	**BROOM BADGER - DUAL SIDE BROOMS** **LEFT SIDE DUMPING HOPPER, TIER 4 FINAL** Rear-axle air suspension, conveyor squeegee, dual, hydraulically driven side brooms, variable height up to 10', left side dumping hopper. Sweeper is painted Elgin white and includes the standard features listed below.	$140,065	$0.00
0	5801019	**BROOM BADGER - DUAL SIDE BROOMS** **RIGHT SIDE DUMPING HOPPER, TIER 4 FINAL** Rear-axle air suspension, conveyor squeegee, dual, hydraulically driven side brooms, variable height up to 10', right side dumping hopper. Sweeper is painted Elgin white and includes the standard features listed below.	$140,065	$0.00
0	5801020	USA 2020 ISUZU NRR LEFT HAND STEER INCLUDES MOUNTING CHARGE	$64,985	$0.00
0	5801115	**DUALIZATION FOR 2020 MODEL YEAR**	$12,750	$0.00
0	NO CHARGE	**CHASSIS MOUNTING CHARGE**	N/C	$0.00

NOTE: Customer supplied chassis are not accepted due to Isuzu controled modicifations.

NOTE: One year warranty on all Elgin supplied parts and labor. Consult your Elgin dealer for full warranty details.

STANDARD FEATURES

AM/FM Radio w/ CD
Aux-engine Kubota V2403M 59hp, Tier 4F
Aux-engine Murphy shut down system
Low engine oil pressure, high coolant temp, hyd oil level/temp shutdown
Broom side, 36" and 42" steel vertical digger 4 and 5 segment
Broom side, hydraulic floating suspension, adjustable spring loaded deploy
Broom, main, 34" diameter, 58" wide prefab disposable
Camera, Rear and RH side view with in-cab monitor
Chromed shaft pivots
Conveyor chain, hardened with polyurethane sprockets
Conveyor, 8 flight squeegee with rubber edging
Conveyor, lift independent from main broom
Conveyor, two piece replaceable wear plates
Conveyor raise automatic in reverse
Conveyor stall alarm
Dirt shoes, heavy duty steel
Electric backup alarm
Front spray bar
Greaseless composite bushings
Hopper inspection door
Hydraulic pump, variable displacement, load-sense, piston type
PM 10 Compliant (RULE 1186)
Rear Axle Air Suspension
Operators and Service Manual
Side broom Tilt Right Hand
Side broom Tilt Left Hand

MODEL: BROOM BADGER
EFFECTIVE DATE: 01/01/2020
SUPERSEDES ALL PREVIOUS PRICE LISTS
DEALER PRICE LIST (U.S. DOLLARS)
REV #

QUANTITY	PART NUMBER	MODEL DESCRIPTION	2020 LIST PRICE	2020 EXTENDED
		----------BROOMS---------		
0	5801104	STRIP MAIN BROOM ILO STD	$650.00	$0.00
		---------LIGHTS----------		
0	5801103	AMBER STROBE MOUNTED DIRECTLY BEHIND TRUCK CAB, VISIBLE FROM IN FRONT OF THE TRUCK	$440.00	$0.00
0	5801105	REAR MOUNTED LED LIGHTBAR	$1,875.00	$0.00
0	5801113	SECOND AMBER REAR STROBE MOUNTED ON THE CURBSIDE IN ADDITION TO THE STANDARD STREET SIDE AMBER STROBE	$325.00	$0.00
0	5801126	REAR LED TAIL LIGHTS (INCLUDES STOP, BACKUP, TURN AND TAIL)	$540.00	$0.00
		-------PM10 OPTIONS-------		
0	STANDARD	PM10 COMPLIANT (RULE 1186)	$0.00	$0.00
		----------SAFETY----------		
0	SPECIAL	REMOVE REAR CAMERA (DEDUCT)	$0.00	$0.00
		-------SWEEP COMPONENTS--		
0	STANDARD	SIDE BROOM TILT - RIGHT	$0.00	$0.00
0	STANDARD	SIDE BROOM TILT - LEFT	$0.00	$0.00
		----- MANUALS----		
0	0701669	ADDITIONAL BROOM BADGER OPERATORS MANUAL	$65.00	$0.00
0	0702230	BROOM BADGER PARTS MANUAL	CONTACT MIMEO	
		--------WATER SYSTEM------		
0	5801107	CONVEYOR FLUSHER	$1,150.00	$0.00
		--ISUZU NRR CHASSIS OPTIONS---		
0	5801134	REAR LEAF SPRING SUSPENSION IN LIEU OF STANDARD AIR SUSPENSION REAR AXLE (DEDUCT)	-$4,250.00	$0.00
		---------WARRANTY---------		
0	EW-MECH-NA-2PL	SECOND YEAR WARRANTY PARTS/LABOR MODULE ONLY (EXCL. AUX ENG)	$5,870	$0.00
0	EW-MECH-NA-3PL	THIRD YEAR WARRANTY PARTS/LABOR MODULE ONLY (EXCL. AUX ENG)	$11,110	$0.00

MODEL: BROOM BADGER
EFFECTIVE DATE: 01/01/2020
SUPERSEDES ALL PREVIOUS PRICE LISTS
DEALER PRICE LIST (U.S. DOLLARS)
REV #

QUANTITY	PART NUMBER	MODEL DESCRIPTION	2020 LIST PRICE	2020 EXTENDED
		------FREIGHT RATES------		
0	FRT-139-001	SELF SHIPPING DOCK CHARGE	$590.00	$0.00
0	FRT-139-900	ALASKA	call for quote	$0.00
0	FRT-139-901	ALABAMA	$4,070.00	$0.00
0	FRT-139-902	ARKANSAS	$3,335.00	$0.00
0	FRT-139-903	ARIZONA	$4,650.00	$0.00
0	FRT-139-904	CALIFORNIA	$5,795.00	$0.00
0	FRT-139-905	COLORADO	$4,440.00	$0.00
0	FRT-139-906	CONNECTICUT	$4,780.00	$0.00
0	FRT-139-907	DELAWARE	$4,505.00	$0.00
0	FRT-139-908	FLORIDA	$5,900.00	$0.00
0	FRT-139-909	GEORGIA	$4,765.00	$0.00
0	FRT-139-910	HAWAII	call for quote	$0.00
0	FRT-139-911	IOWA	$2,180.00	$0.00
0	FRT-139-912	IDAHO	$4,295.00	$0.00
0	FRT-139-913	ILLINOIS	$2,380.00	$0.00
0	FRT-139-914	INDIANA	$2,890.00	$0.00
0	FRT-139-915	KANSAS	$2,545.00	$0.00
0	FRT-139-916	KENTUCKY	$3,190.00	$0.00
0	FRT-139-917	LOUISIANA	$4,725.00	$0.00
0	FRT-139-918	MASSACHUSETTS	$4,825.00	$0.00
0	FRT-139-919	MARYLAND	$4,825.00	$0.00
0	FRT-139-920	MAINE	$5,910.00	$0.00
0	FRT-139-921	MICHIGAN	$2,670.00	$0.00
0	FRT-139-922	MINNESOTA	$1,795.00	$0.00
0	FRT-139-923	MISSOURI	$3,230.00	$0.00
0	FRT-139-924	MISSISSIPPI	$4,105.00	$0.00
0	FRT-139-925	MONTANA	$3,855.00	$0.00
0	FRT-139-926	NORTH CAROLINA	$4,240.00	$0.00
0	FRT-139-927	NORTH DAKOTA	$1,730.00	$0.00
0	FRT-139-928	NEBRASKA	$2,235.00	$0.00
0	FRT-139-929	NEW HAMPSHIRE	$5,060.00	$0.00
0	FRT-139-930	NEW JERSEY	$4,495.00	$0.00
0	FRT-139-931	NEW MEXICO	$4,550.00	$0.00
0	FRT-139-932	NEVADA	$4,610.00	$0.00
0	FRT-139-933	NEW YORK	$6,355.00	$0.00
0	FRT-139-934	OHIO	$3,350.00	$0.00
0	FRT-139-935	OKLAHOMA	$3,370.00	$0.00
0	FRT-139-936	OREGON	$4,930.00	$0.00
0	FRT-139-937	PENNSYLVANIA	$3,925.00	$0.00
0	FRT-139-938	RHODE ISLAND	$4,985.00	$0.00
0	FRT-139-939	SOUTH CAROLINA	$4,365.00	$0.00
0	FRT-139-940	SOUTH DAKOTA	$2,070.00	$0.00
0	FRT-139-941	TENNESSEE	$3,585.00	$0.00
0	FRT-139-942	TEXAS	$4,395.00	$0.00
0	FRT-139-943	UTAH	$4,090.00	$0.00
0	FRT-139-944	VIRGINIA	$4,240.00	$0.00
0	FRT-139-945	VERMONT	$5,270.00	$0.00
0	FRT-139-946	WASHINGTON	$4,885.00	$0.00
0	FRT-139-947	WISCONSIN	$2,325.00	$0.00
0	FRT-139-948	WEST VIRGINIA	$3,610.00	$0.00
0	FRT-139-949	WYOMING	$3,350.00	$0.00

*****NOTE CALL FOR FREIGHT QUOTE IF YOU HAVE MORE THAN ONE UNIT SHIPPING SIMULTANEOUSLY*****

SUB TOTAL	**$0.00**

		-----DISCOUNTS-----		
0	DISC-139-ADDL	ADDITIONAL DISCOUNT	$0.00	$0.00
0	DISC-139-PROMO	PROMO DISCOUNT	$0.00	$0.00

GRAND TOTAL	**$0.00**

MODEL: BROOM BEAR
EFFECTIVE DATE: 1/01/2020
SUPERCEDES ALL PREVIOUS PRICE LISTS
DEALER PRICE LIST (U.S. DOLLARS)

Purchase Order #			**Ship To Address:**
Order Date:			
Delivery Date Requirment If Any:			**State Penalty Clause If Applicable:**

QUANTITY	PART NUMBER	MODEL DESCRIPTION	2020 LIST PRICE	2020 EXTENDED
0	1113136	**BROOM BEAR DUAL**	$160,295	$0.00
0		Conveyor squeege, variable height, right side dumping, **4.5 cu. yd. hopper**, with dual, hydraulically driven, trailing arm sidebrooms, sweeper is powder coated from powder coatings chart 2003/N with powder coated gray undercarriage and including the standard features listed below.		
0	1126378	**BROOM BEAR DUAL-M2**	$161,840	$0.00
0		Conveyor squeege, variable height, right side dumping, **5.4 cu. yd. hopper**, with dual, hydraulically driven, trailing arm sidebrooms, sweeper is powder coated from powder coatings chart 2003/N with powder coated gray undercarriage and including the standard features listed below.		
0	1125527	**BROOM BEAR DUAL-AUTOCAR**	$160,250	$0.00
0		Conveyor squeege, variable height, right side dumping, **4.5 cu. yd. hopper**, with dual, hydraulically driven, trailing arm sidebrooms, sweeper is powder coated from powder coatings chart 2003/N with powder coated gray undercarriage and including the standard features listed below.		
0	1125961	**BROOM BEAR DUAL-AUTOCAR**	$161,840	$0.00
0		Conveyor squeege, variable height, right side dumping, **5.4 cu. yd. hopper**, with dual, hydraulically driven, trailing arm sidebrooms, sweeper is powder coated from powder coatings chart 2003/N with powder coated gray undercarriage and including the standard features listed below.		
		CHASSIS		
0	1122061	FL M2 W/HEATED MIRRORS (LIMITED QTY) (USE WITH 4.5YD HOPPER)	CONTACT INSIDE SALES	$0.00
0	1126675	FL M2 W/HEATED MIRRORS (LIMITED QTY) (USE WITH 5.4 YD HOPPER)	CONTACT INSIDE SALES	$0.00
0	1127276	IH 4400 W/HEATED MIRRORS (LIMITED QTY) (USE WITH 4.5YD HOPPER)	CONTACT INSIDE SALES	$0.00
0	1126098	AUTOCAR CHASSIS	CONTACT INSIDE SALES	$0.00
		CHASSIS MOUNTING CHARGE		
0	1122083	M2 - CHASSIS ALTERATIONS (USE WITH 4.5 HOPPER)	$2,680	$0.00
0	1123197	M2 - CHASSIS ALTERATIONS (USE WITH 5.4 HOPPER)	$2,680	$0.00
0	1125473	IH - CHASSIS ALTERATIONS	$2,680	$0.00
0	1126099	AUTO CAR - CHASSIS ALTERATIONS	$2,680	$0.00
0	SPECIAL	CUSTOMER SUPPLIED CHASSIS ALTERATIONS	CONTACT INSIDE SALES	$0.00
0	CSC-HANDLING	CUSTOMER SUPPLIED HANDLING CHARGE	$3,690	$0.00

NOTE: Customer Supplied Cassis Requires Both The Chassis Alterations and the Handling Charge

NOTE: A BODY includes the cost of Elgin standard white finish paint. It does not however, include the price of the chassis.

NOTE: The chassis being supplied by a customer or dealer **must** comply completely with all Elgin requirements or the chas

NOTE: For cost of sweeper mounted on any other chassis, consult factory.

NOTE: One year warranty on all Elgin supplied parts and labor. Consult your Elgin dealer for full warranty details.

STANDARD FEATURES

1	0701681	BROOM BEAR OPERATORS MANUAL	STANDARD	$0.00
1	0702241	BROOM BEAR PARTS BOOK	STANDARD	$0.00
1	0730166	BROOM MEASUREMENT RULER	STANDARD	$0.00
1	1032481	16' 8" WATER FILL HOSE	STANDARD	$0.00
1	0701707	MACHINE DELIVERY PACKET	STANDARD	$0.00
1	0702020	ELGIN SAFETY MANUAL	STANDARD	$0.00

Broom side, 46 "steel vertical digger 4 or 5 segment
Broom side, air floating suspension with adjustable pin stops, air deploy
Broom, main, 34" diameter, 60" wide prefab disposable
Camera, Rear with in-cab monitor
Conveyor chain, hardened with polyurethane sprockets
Conveyor, 11 flight squeegee with rubber edging
Conveyor, lift independent from main broom
Conveyor, three piece replaceable wear plates
Conveyor flush out system
Conveyor raise in reverse
Conveyor stall alarm
Spring Assisted Dirt shoes, heavy duty single row carbide steel (rubber isolated)
Electric backup alarm
Hopper inspection door
Hopper, 4.5 cu yd with window and skylight
Hopper up indicator and beep
Hopper, variable high dump, **11'2"**, 4.5 yard
Hose, hydrant fill, 16'8" (5080 mm) with strainer and coupling
Hydraulic oil level gauge w/ external thermometer and in-cab level light
Hydraulic system, load sensing with selectable transmission driven PTO pump

Lights, automatic backup
Lights, combination tail/stop, separate amber signal
Lights, flood light, one per broom (3)
Manuals, operator and parts
Mechanical mainbroom suspension
Rear broom cover and anti-carryover wrap
Rear broom spray bar
Rear right hand flood light
Reflectors, set of 6
Sidebroom speed control, external to cab
Sweep resume / raise in reverse
Tactile controls for all sweep functions
Tool storage
Water fill, anti-siphon
Water level indicator in-cab
Water Pump, electric diaphragm
Water tank, molded polyethylene,
360 gallon total nominal capacity

MODEL: BROOM BEAR
EFFECTIVE DATE: 1/01/2020
SUPERCEDES ALL PREVIOUS PRICE LISTS
DEALER PRICE LIST (U.S. DOLLARS)

QUANTITY	PART NUMBER	MODEL DESCRIPTION	2020 LIST PRICE	2020 EXTENDED
		-----ALARMS/INDICATORS----		
0	SPECIAL	ECCO SA940 SMART ALARM (ILO of STD)	$285.00	$0.00
0	1101528	LATCHING ELEVATOR REVERSE AND ALARM	$420.00	$0.00
0	1104970	HOPPER UP CONSTANT ALARM	$375.00	$0.00
0	1104705	HOPPER FULL INDICATOR	$830.00	$0.00
		-------AUTO LUBE----------		
0	1101559	MIDWEST AUTO LUBE - SWEEPER ONLY	$5,240.00	$0.00
		-----ADDITIONAL MANUALS----		
0	0701681	BROOM BEAR OPERATORS MANUAL	$55.00	$0.00
0	0702461	BROOM BEAR SERVICE MANUAL	$95.00	$0.00
0	0702241	BROOM BEAR PARTS BOOK	$90.00	$0.00
		----------BROOMS---------		
0	1035616	DOUBLE WRAP MAINBROOM	$480.00	$0.00
0	1035617	POLY/WIRE WAFER MAINBROOM	$560.00	$0.00
0	1058156	STRIP MAINBROOM (MILWAUKEE)	$675.00	$0.00
0	1058158	STRIP MAINBROOM (URB)	$470.00	$0.00
0	1077151	URB STRIP MAINBROOM W/CENTER SWEEP MANDREL	$470.00	$0.00
0	1095046	ALUMINUM SIDEBROOM SEGMENTS - BLUE STEEL	$345.00	$0.00
0	1096691	DEDUCT MAIN BROOM & CORE	-$222.72	$0.00
0	1115524	HYDRAULIC FLOAT MAINBROOM SUSPENSION	$0.00	$0.00
0	1116748	HYDRAULIC SIDEBROOM WITH HYDRAULIC MAINBROOM SUSPENSION **(MUST SELECT HYDRAULIC MAINBROOM SUSPENSION OPTION)**	$0.00	$0.00
0	1115679	IN CAB HYDRAULIC FLOAT SIDEBROOMS **(NOT COMPATIBLE WITH HYDRAULIC MAINBROOM SUSPENSION)**	$0.00	$0.00
		----------DECALS---------		
1	1102781	RED DECALS - BROOM BEAR	$0.00	$0.00
0	1102782	WHITE DECALS - BROOM BEAR	$0.00	$0.00
0	1101037	SLOW MOVING VEHICLE SIGN	$165.00	$0.00
0	1122929	SHIP DECALS AND SWOOSH LOOSE IN HOPPER	$0.00	$0.00
		--------GAUGES----------		
0	1101379	BROOM HOUR METERS	$405.00	$0.00
0	1111656	HYDRAULIC OIL TEMP DISPLAY (IN CAB)	$320.00	$0.00
0	SPECIAL	HYDRAULIC OIL HIGH TEMPERTURE, LOW LEVEL PTO OFF WITH DISPLAY	$540.00	$0.00
		----------HOPPER----------		
0	1104503	LIFELINER HOPPER SYSTEM W/WARRANTY	$4,790.00	$0.00
0	1101951	STAINLESS STEEL HOPPER	$9,565.00	$0.00
0	1115491	EXTENDED HOPPER DOOR	$1,040.00	$0.00
		--------LIGHTS----------		
0	1103553	PACKAGE 1 : SINGLE REAR/SINGLE HOPPER BEACON; LED WITH GUARD	$2,050.00	$0.00
0	1103533	PACKAGE 2 : DUAL REAR/SINGLE HOPPER BEACON; LED WITH GUARD	$2,805.00	$0.00
0	1125926	PACKAGE 3 : DUAL REAR/SINGLE HOPPER BEACON; LED WITH GUARD & LED ARROWSTICK	$4,385.00	$0.00
0	1104618	PACKAGE 4 : SINGLE REAR/SINGLE HOPPER MOUNT AND GUARD - W/O BEACONS	$1,675.00	$0.00
0	1104619	PACKAGE 5 : DUAL REAR/SINGLE HOPPER MOUNT AND GUARD - W/O BEACONS	$2,080.00	$0.00
0	1102735	LED STOP/TAIL/TURN/REAR ID/CLEARANCE LIGHTS	$370.00	$0.00
0	1125927	REAR MOUNTED LED ARROWSTICK	$1,815.00	$0.00
0	1102736	(2) REAR LOW MOUNTED OVAL AMBER LED FLASHERS	$445.00	$0.00
0	1103898	(2) REAR HIGH MOUNTED OVAL AMBER LED FLASHERS	$450.00	$0.00
0	1104481	ARROWBOARD - REAR	$2,155.00	$0.00

MODEL: BROOM BEAR
EFFECTIVE DATE: 1/01/2020
SUPERCEDES ALL PREVIOUS PRICE LISTS
DEALER PRICE LIST (U.S. DOLLARS)

QUANTITY	PART NUMBER	MODEL DESCRIPTION	2020 LIST PRICE	2020 EXTENDED
		---------PAINT----------		
1	4810001	PAINT SWEEPER STANDARD WHITE	$0.00	$0.00
0	4811003	PAINT SWEEPER YELLOW RAL 1003	$525.00	$0.00
0	4811007	PAINT SWEEPER YELLOW RAL 1007	$525.00	$0.00
0	4811018	PAINT SWEEPER YELLOW RAL 1018	$525.00	$0.00
0	4811023	PAINT SWEEPER YELLOW RAL 1023	$525.00	$0.00
0	4811037	PAINT SWEEPER YELLOW RAL 1037	$525.00	$0.00
0	4812008	PAINT SWEEPER ORANGE RAL 2008	$525.00	$0.00
0	4812009	PAINT SWEEPER ORANGE RAL 2009	$525.00	$0.00
0	4816018	PAINT SWEEPER GREEN RAL 6018	$525.00	$0.00
0	SPECIAL	PAINT SWEEPER OTHER RAL THAN ABOVE	$1,285.00	$0.00
0	SPECIAL	PAINT SWEEPER OTHER THAN ABOVE	$3,890.00	$0.00
		-------PM10 OPTIONS-------		
0	1115481	PM10 COMPLIANT (RULE 1186)	$3,260.00	$0.00
		---------SAFETY----------		
0	1104991	REMOVE REAR CAMERA	$0.00	$0.00
0	1095548	LEFT HAND SIDE CAMERA	$610.00	$0.00
0	9306848	TRIANGLE REFLECTIVE FLARES (3)	$95.00	$0.00
		------SWEEPER OPTIONS-----		
0	1100660	LEFT HAND SIDEBROOM TILT	$1,010.00	$0.00
0	1100656	RIGHT HAND SIDEBROOM TILT	$1,010.00	$0.00
0	1117071	LEFT HAND SIDEBROOM TILT W/INDICATOR	$1,080.00	$0.00
0	1117070	RIGHT HAND SIDEBROOM TILT W/INDICATOR	$1,080.00	$0.00
0	1101385	RUBBER MOUNTED CARBIDE DRAG SHOES TWO-ROW (ILO STD)	$825.00	$0.00
0	1102732	RUBBER DRAG-SHOES (ILO STD)	$135.00	$0.00
0	1104238	BORON DRAG-SHOES (ILO STD)	$145.00	$0.00
0	1104997	IN-CAB VARIABLE SPEED AND REVERSING BROOM CONTROL **(ONLY COMPATIBLE WITH PM-10 OPTION)**	$2,130.00	$0.00
0	1104990	VARIABLE SPEED CONVEYOR	$1,970.00	$0.00
0	1122873	VARIABLE SPEED CONVEYOR & IN CAB VARIABLE SPEED & REVERSE CONTROL SIDEBROOMS	$4,030.00	$0.00
0	1106049	HEAVY DUTY LOWER ROLLER	$1,070.00	$0.00
0	1114619	RUBBER BELT CONVEYOR (ILO STANDARD SQUEEGEE)	$0.00	$0.00
0	1120535	CONVEYOR ONLY ROTATE FOR WASHDOWN	$480.00	$0.00
		-----TOOLS/TOOLBOXES------		
0	1053426	TOOL KIT	$790.00	$0.00
0	1057687	TOOL BOX W/TOOLS	$765.00	$0.00
		--------WATER SYSTEM------		
0	1032484	25' WATER FILL HOSE (ILO 16' 8")	$205.00	$0.00
0	1108830	AIR PURGE FOR WATER SYSTEM	$410.00	$0.00
0	1113859	WATER SIDEBROOM FUNCTION CONTROL (ILO MANUAL) **(USE WITHOUT EXTENDED SIDEBROOM REACH)**	$525.00	$0.00
0	1121603	WATER SIDEBROOM FUNCTION CONTROL (ILO MANUAL) **(USE WITH EXTENEDED SIDEBROOM REACH)**	$835.00	$0.00

MODEL: BROOM BEAR
EFFECTIVE DATE: 1/01/2020
SUPERCEDES ALL PREVIOUS PRICE LISTS
DEALER PRICE LIST (U.S. DOLLARS)

QUANTITY	PART NUMBER	MODEL DESCRIPTION	2020 LIST PRICE	2020 EXTENDED
		---M2 CHASSIS OPTIONS-----		
0	1071235	FUEL CAP SAFETY LOCK	$235.00	$0.00
0	1075400	AM/FM/CD RADIO	$950.00	$0.00
0	1080756	FENDER MOUNTED MIRROR-LEFT HAND	$585.00	$0.00
0	1109607	12" CONVEX MIRRORS (IL0 STD 8")	$340.00	$0.00
0	1081188	SPARE CHASSIS KEY	$55.00	$0.00
0	1081365	IN CAB AIR FILTER RESTRICTION INDICATOR	$890.00	$0.00
0	1081747	(2) AIR CLOTH HI-BACK	$2,140.00	$0.00
0	1081748	(1) AIR CLOTH HI-BACK SEAT	$1,110.00	$0.00
0	1120505	SPARE TIRE & WHEEL, BALANCED	$1,415.00	$0.00
0	1081909	SINGLE ARM REST - VINYL	$390.00	$0.00
0	1081910	DUAL ARM REST - VINYL	$730.00	$0.00
0	1081911	SINGLE ARM REST - CLOTH	$390.00	$0.00
0	1081912	DUAL ARM REST - CLOTH	$730.00	$0.00
0	1081956	DAYTIME RUNNING LIGHTS	$1,130.00	$0.00
0	1090653	DUAL AIR HORNS	$1,665.00	$0.00
0	1101560	MIDWEST AUTOLUBE - SWEEPER/TRUCK	$7,475.00	$0.00
0	1101567	2 1/2 LB. FIRE EXTINGUISHER	$230.00	$0.00
0	1101568	5 LB. FIRE EXTINGUISHER	$260.00	$0.00
0	1108053	FULL WIDTH FRONT SPRAY BAR	$780.00	$0.00
0	1072443	MASTER BATTERY SWITCH	$560.00	$0.00
0	4820001	CAB STANDARD WHITE	$0.00	$0.00
0	1063734	M2 (IN STOCK) CAB SPECIAL COLOR	$4,015.00	$0.00
0	1115658	(2) FRONT CAMERAS (1) REAR CAMERA	$1,020.00	$0.00
0	1120361	EXTENDED REACH RIGHT HAND SIDEBROOM (**MUST SELECT IN CAB HYDRAULIC FLOAT SIDEBROOMS**)	$1,435.00	$0.00
0	1120782	EXTENDED REACH RIGHT AND LEFT HAND SIDEBROOMS (**MUST SELECT IN CAB HYDRAULIC FLOAT SIDEBROOMS)**	$2,010.00	$0.00
		-----NAVISTAR CHASSIS OPTIONS-----		
0	4820001	CAB STANDARD WHITE	$0.00	$0.00
0	1063731	NAV CAB PAINTED SPECIAL COLOR	$3,865.00	$0.00
0	1108053	FULL WIDTH FRONT SPRAY BAR	$780.00	$0.00
0	1086733	LEFT HAND FENDER MOUNTED MIRROR	$540.00	$0.00
0	1101567	2 1/2 LB. FIRE EXTINGUISHER	$230.00	$0.00
0	1101568	5 LB. FIRE EXTINGUISHER	$260.00	$0.00
0	1091761	EXTRA KEY	$70.00	$0.00
0	1091770	(2) ELECTRIC & (1) AIR HORN	$1,990.00	$0.00
0	1099317	(1) ELECTRIC HORN	$415.00	$0.00
0	1120361	EXTENDED REACH RIGHT HAND SIDEBROOM (**MUST SELECT IN CAB HYDRAULIC FLOAT SIDEBROOMS**)	$1,435.00	$0.00
0	1120782	EXTENDED REACH RIGHT AND LEFT HAND SIDEBROOMS (**MUST SELECT IN CAB HYDRAULIC FLOAT SIDEBROOMS)**	$2,010.00	$0.00

MODEL: BROOM BEAR
EFFECTIVE DATE: 1/01/2020
SUPERCEDES ALL PREVIOUS PRICE LISTS
DEALER PRICE LIST (U.S. DOLLARS)

QUANTITY	PART NUMBER	MODEL DESCRIPTION	2020 LIST PRICE	2020 EXTENDED
		-----FREIGHT RATES-----		
0	FRT-118-001	SELF SHIPPING DOCK CHARGE	$595.00	$0.00
0	FRT-118-002	FREIGHT-IL,WI,IA,IN,MI,MN,KY	$1,310.00	$0.00
0	FRT-118-003	FREIGHT-TN,WV,PA,NY	$2,850.00	$0.00
0	FRT-118-004	FREIGHT-NH,VT,ME	$3,595.00	$0.00
0	FRT-118-005	FREIGHT-NEW YORK CITY	$4,110.00	$0.00
0	FRT-118-006	FREIGHT-ND,SD,NE,OK,KS,AR,AL,MO	$2,715.00	$0.00
0	FRT-118-007	FREIGHT-AZ,UT	$5,390.00	$0.00
0	FRT-118-008	FREIGHT-CA,NV,ID,OR,WA	$6,355.00	$0.00
0	FRT-118-009	FREIGHT-CHICAGO/MILWAUKEE	$900.00	$0.00
0	FRT-118-010	FREIGHT - FL,LA,TX,NM,CO,WY,MT	$4,145.00	$0.00
0	FRT-118-011	FREIGHT- OH,ST.LOUIS METRO	$1,530.00	$0.00
0	FRT-118-012	FREIGHT- MS,GA,SC,NC,VA,MD	$3,130.00	$0.00
0	FRT-118-013	FREIGHT - RI,DE,CT,NJ,MA	$2,740.00	$0.00
0	FRT-118-014	FREIGHT - LAREDO, TX	$6,700.00	$0.00
0	FRT-118-015	SPECIALIZED TRANSPORT EQUIPMENT	$1,030.00	$0.00
		---------WARRANTY---------		
0	EW-ME-NA-2PL	BROOM BEAR 2ND YEAR PARTS/LABOR	$2,884.00	$0.00
0	EW-ME-NA-3PL	BROOM BEAR 3RD YEAR PARTS/LABOR	$5,445.00	$0.00
0	EW-ME-NA-4PL	BROOM BEAR 4TH YEAR PARTS/LABOR	$7,765.00	$0.00
0	EW-ME-NA-5PL	BROOM BEAR 5TH YEAR PARTS/LABOR	$9,871.00	$0.00
			SUB TOTAL	**$0.00**
		-----DISCOUNTS-----		
0	DISC-118-ADDL	ADDITIONAL DISCOUNT	0	$0.00
0	DISC-118-PROMO	PROMO DISCOUNT	0	$0.00
		SPECIAL RFQ OPTIONS OR OTHER DESCRIPTIONS		
			GRAND TOTAL	**$0.00**

1 2 3 $ 4 5

MODEL: CROSSWIND SINGLE ENGINE
EFFECTIVE DATE: 01/01/2020
SUPERCEDES ALL PREVIOUS PRICE LISTS
DEALER PRICE LIST (U.S. DOLLARS)

Purchase Order #	**Equipped** with MEMORY SWEEP	**Ship To Address:**
Order Date:		
Delivery Date Requirment If Any:		**State Penalty Clause If Applicable:**

QUANTITY	PART NUMBER	MODEL DESCRIPTION	2020 LIST PRICE	2020 EXTENDED
		ECOINFUSED SINGLE ENGINE		
0	1127252	**CROSSWIND - M2**	$102,375	$0.00
0		**Equipped with MemorySweep®**; 8.0 cu. Yd. Hopper, right and left side brooms, sweeper is powder coated from powder coatings chart 2003/N with powder coated gray undercarriage and includes the standard features listed below.		
0	1128622	**CROSSWIND - DUAL - PETERBILT**	$102,375	$0.00
0		**Equipped with MemorySweep®**; 8.0 cu. Yd. Hopper, right and left side brooms, sweeper is powder coated from powder coatings chart 2003/N with powder coated gray undercarriage and includes the standard features listed below.		
		CHASSIS		
0	SPECIAL	M2 DUAL STEER	CONTACT INSIDE SALES	$0.00
0	SPECIAL	PETERBILT RIGHT HAND STEER (NON STOCKED CHASSIS) SINGLE SPEED REAR AXLE	CONTACT INSIDE SALES	$0.00
0	SPECIAL	PETERBILT DUAL STEER (NON STOCKED CHASSIS) SINGLE SPEED REAR AXLE	CONTACT INSIDE SALES	$0.00
		CHASSIS MOUNTING CHARGE		
0	SPECIAL	M2 CHASSIS - CHASSIS ALTERATIONS	$2,680	$0.00
0	SPECIAL	PETERBILT CHASSIS - CHASSIS ALTERATIONS	$2,680	$0.00
		NOTE: Customer Supplied Chassis requires both the Chassis Alterations and the Handling Charge		
		APPLICATION - SPECIFIC PACKAGES		
0	SPECIAL	**CROSSWIND DUAL FSX PACKAGE**	CONTACT INSIDE SALES	$0.00
0		Equipped with FSX pickup head ILO the standard Crosswind pickup head, 11" diameter suction hose and polypropylene side broom segments.		
1	4820001	PAINT CAB STANDARD WHITE	N/C	$0.00
1	4810001	PAINT SWEEPER STANDARD WHITE	N/C	$0.00

NOTE: A BODY includes the cost of Elgin standard white finish paint. It does not however, include the price of the chas

NOTE: The chassis being supplied by a customer or dealer **must** comply completely with all Elgin requirements or the

NOTE: For cost of sweeper mounted on any other chassis, consult factory.

NOTE: One year warranty on all Elgin supplied parts and labor. Consult your Elgin dealer for full warranty details.

MODEL: CROSSWIND SINGLE ENGINE
EFFECTIVE DATE: 01/01/2020
SUPERCEDES ALL PREVIOUS PRICE LISTS
DEALER PRICE LIST (U.S. DOLLARS)

QUANTITY	PART NUMBER	MODEL DESCRIPTION	2020 LIST PRICE	2020 EXTENDED

STANDARD FEATURES

1	0702255	CROSSWIND SHARED POWER 74HP PARTS MANUAL	STANDARD	$0.00
1	0701677	CROSSWIND SHARED POWER 74HP OPERATORS MANUAL	STANDARD	$0.00
1	0730166	BROOM MEASUREMENT RULER	STANDARD	$0.00
1	1032481	16' 8" WATER FILL HOSE	STANDARD	$0.00
1	0701705	MACHINE DELIVERY PACKET	STANDARD	$0.00
1	0702020	ELGIN SAFETY MANUAL	STANDARD	$0.00

Alternator, 95 amp
Backup Alarm, electric
Blower, HARDOX®500 steel with linatex lined housing
Brooms, hydraulic rotation
Brooms, Dual
Camera, rear mounted
Console, w/rocker switches for all sweep functions, with full gauge package including tachometer, engine hour meter, oil pressure indicator, coolant temperature, voltmeter and fuel lever indicator, water level gauge and warning lights for hopper "up", hopper rear door "open" and hopper "full", with auxiliary engine, RPM control, side broom down pressure controls and automotive style blade fuses
Doors, access fiberglass doors provide easy service and maintenance on auxiliary engine, hydraulic and electrical system
Electronic Actuated Throttle, sweep resume/sweep transport/reverse pick-up
Hopper rear door, hydraulically opened/closed and locked/unlocked with external manual controls
Hose, hydrant fill, 16'8" (5080 mm) with coupling
LED Clearance Lights
Lights; rear clearance and rear identification
Manuals, operator and parts
Mirrors, West Coast type with 8" convex inserts, one each side
Pick-up head, hydraulically operated, 14" (355 mm) outside diameter pressure hose, 12-3/4" (324mm) inside diameter suction hose with quick disconnect on suctions side
Water system; one (1) rocker switch with HI / LOW setting, with manual valves for water control
Spray nozzles, sixteen (16), seven (7) in the pick-up head, three (3) in the suction nozzle, three (3) at each side broom
Side Broom Outer Position Stop
Trans Oil Cooler
Vacuum enhancer, external manually operated
Water tank, molded polyethylene, 240 gallons (907L)
Water pre-filter, hydrant fill hose

		MEMORY SWEEP® HAS BEEN SELECTED		
1	1126259	***MEMORY SWEEP®	$2,810.00	$2,810.00
		ELGIN SWEEPER EXCLUSIVE SWEEP RESUME FEATURE; Provides in-cab feedback for operator awareness of sidebroom tilt angle, vacuum enchancer percent open/close and one switch sweep resume of sweep functions. Elgin's optional Memory Sweep ® system allows the operator to resume all previous sweep settings, even broom tilt (if so equipped), with one touch control. This feature enhances productivity and reduces fatigue. Memory Sweep incorporates a multi-screen display that indicates system diagnostics as well as optional features such as broom tilt angle, vacuum enhancer position, and broom hours.		

MODEL: CROSSWIND SINGLE ENGINE
EFFECTIVE DATE: 01/01/2020
SUPERCEDES ALL PREVIOUS PRICE LISTS
DEALER PRICE LIST (U.S. DOLLARS)

QUANTITY	PART NUMBER	MODEL DESCRIPTION	2020 LIST PRICE	2020 EXTENDED
STEP # 2		SELECT PRODUCT ENHANCEMENTS		
		--------SWEEPER COMPONENTS---------		
0	1114911	***BROOM HOURS **WITH IN-CAB DISPLAY**	$115.00	$0.00
0	1119215	***VACUUM ENHANCER IN-CAB CONTROL **WITH IN-CAB DISPLAY**	$515.00	$0.00
		----------SIDE BROOMS OPTIONS----------		
0	1111176	RIGHT HAND GUTTER BROOM TILT **WITH IN-CAB DISPLAY**	$1,080.00	$0.00
0	1111175	LEFT HAND GUTTER BROOM TILT **WITH IN-CAB DISPLAY**	$1,080.00	$0.00
0	1127399	VARIABLE SPEED - DUAL SIDEBROOMS	$3,495.00	$0.00
		ALL WORK & FLOOD LIGHTS ARE EACH CONTROLLED USING INDIVIDUAL ROCKER S		
		NOTE: Sidebroom Lights are NOT STANDARD		
0	1127624	INDVIDUAL SWITCHES FOR DUAL SIDEBROOM LIGHTS-LED	$800.00	$0.00
0	1127625	INDVIDUAL SWITCHES FOR RIGHT HAND SIDEBROOM LIGHT-LED	$730.00	$0.00
0	1127626	INDIVIDUAL SWITCHES FOR DUAL REAR FLOOD LIGHTS-LED	$915.00	$0.00
0	1126157	INDIVIDUAL SWITCHES FOR DUAL SIDEBROOM & REAR FLOOD LTS-LED	$1,315.00	$0.00
		-----WATER SYSTEM (CHOOSE UP TO ONE)-----		
0	1110823	FUNCTIONAL CONTROL OF WATER SYSTEM	$780.00	$0.00
		FUNCTIONAL CONTROL OF WATER SYSTEM dispenses water with the use of the sweeper function rocker switch. Not compatible with Individual control water system. Not compatibale with PM-10 water system.		
		OR		
0	1113730	***INDIVIDUAL SWITCHES FOR WATER SYSTEM CONTROL **(NOT COMPATIBLE WITH PM10)**	$1,430.00	$0.00
		----------SIDE BROOMS----------		
0	112947	***DUAL SIDE BROOM SCRUBBING POSITION	$1,740.00	$0.00
		SIDE BROOM SCRUBBING POSITION provides additional switch on console to allow the side brooms to sweep inboard in front of the pickup head in the scrubbing position.		

MODEL: CROSSWIND SINGLE ENGINE
EFFECTIVE DATE: 01/01/2020
SUPERCEDES ALL PREVIOUS PRICE LISTS
DEALER PRICE LIST (U.S. DOLLARS)

QUANTITY	PART NUMBER	MODEL DESCRIPTION	2020 LIST PRICE	2020 EXTENDED
STEP	# 3	SELECT OPTIONS / ACCESSORIES		
		--------ALARMS----------		
0	1128244	BACKUP ALARM, SMART	$455.00	$0.00
		-----AUTO LUBE-----		
0	1127489	AUTO LUBE SWEEPER ONLY	$4,515.00	$0.00
		----------BROOMS----------		
0	1078904	DUAL POLY BROOMS	$235.00	$0.00
		------DECALS------		
1	1128152	RED LOGO/CROSSWIND	$0.00	$0.00
0	1128155	WHITE LOGO/CROSSWIND	$0.00	$0.00
0	1122929	SHIP DECALS AND SWOOSH LOOSE IN HOPPER	$0.00	$0.00
		----------GAUGES----------		
0	1061886	HYDRAULIC OIL LEVEL GUAGE W/THERMOMETER	$195.00	$0.00
		------HOPPER OPTIONS------		
0	1085864	RIGHT HAND INSPECTION DOOR	$465.00	$0.00
0	1085882	LEFT HAND INSPECTION DOOR	$465.00	$0.00
0	1117147	STAINLESS STEEL RIGHT HAND INSPECTION DOOR	$490.00	$0.00
0	1117148	STAINLESS STEEL LEFT HAND INSPECTION DOOR	$490.00	$0.00
0	1127045	RIGHT HAND INSPECTION DOOR & STEP	$825.00	$0.00
0	1127046	LEFT HAND INSPECTION DOOR & STEP	$825.00	$0.00
0	1085887	6" HOPPER DRAIN	$860.00	$0.00
0	1071234	STAINLESS STEEL HOPPER SCREENS	$1,630.00	$0.00
0	1127047	STAINLESS STEEL RIGHT HAND INSPECTION DOOR & STEP	$845.00	$0.00
0	1127048	STAINLESS STEEL LEFT HAND INSPECTION DOOR & STEP	$845.00	$0.00
0	1119271	STAINLESS STEEL HOPPER DOOR WITH HOPPER DELUGE	$1,080.00	$0.00
		-----LIFELINER HOPPER----		
0	1124502	LIFELINER HOPPER SYSTEM W/WARRANTY	$8,300.00	$0.00
		-----MANUALS----		
0	0702255	CROSSWIND SHARED POWER 74HP PARTS MANUAL	$90.00	$0.00
0	0701677	CROSSWIND SHARED POWER 74HP OPERATORS MANUAL	$55.00	$0.00
0	702490	CROSSWIND SHARED POWER 74HP SERVICE MANUAL	$95.00	$0.00
		-----LIGHTING-----		
0	1121500	REAR LED ARROWBOARD	2780.00	$0.00
0	1121121	REAR LED BEACON / LED ARROWBOARD	$3,105.00	$0.00
0	1126158	(2) ALTERNATING FLASHING REAR LIGHTS **(MUST SELECT ONE "INDVDUAL SWITCHES WORK LIGHT OPTION")**	$1,165.00	$0.00
0	1126575	LED ARROWSTICK	2330.00	$0.00

MODEL: CROSSWIND SINGLE ENGINE
EFFECTIVE DATE: 01/01/2020
SUPERCEDES ALL PREVIOUS PRICE LISTS
DEALER PRICE LIST (U.S. DOLLARS)

QUANTITY	PART NUMBER	MODEL DESCRIPTION	2020 LIST PRICE	2020 EXTENDED
		----------PAINT----------		
0	4811018	PAINT SWEEPER YELLOW RAL 1018	$525.00	$0.00
0	4811023	PAINT SWEEPER YELLOW RAL 1023	$525.00	$0.00
0	4811037	PAINT SWEEPER YELLOW RAL 1037	$525.00	$0.00
0	4813020	PAINT SWEEPER TRAFFIC RED RAL 3020	$525.00	$0.00
0	SPECIAL	PAINT SWEEPER OTHER RAL THAN ABOVE	1285.00	$0.00
0	SPECIAL	PAINT SWEEPER NON RAL COLOR	3890.00	$0.00
		----------PM10 COMPLIANCE----------		
0	1132094	PM-10 WATER SYSTEM **(NOT COMPATIBLE WITH FUNCTIONAL OR INDIVIDUAL WATER SYSTEM)**	$4,290.00	$0.00
0	1132095	PM-10 WATER SYSTEM USE WITH SS HOPPER **(NOT COMPATIBLE WITH FUNCTIONAL OR INDIVIDUAL WATER SYSTEM)**	$4,225.00	$0.00
0	1132098	PM-10 WATER SYSTEM USE WITH CENTERBROOM **(NOT COMPATIBLE WITH FUNCTIONAL OR INDIVIDUAL WATER SYSTEM)**	$9,190.00	$0.00
0	SPECIAL	PM-10 WATER SYSTEM USE WITH CENTERBROOM AND SS HOPPER **(NOT COMPATIBLE WITH FUNCTIONAL OR INDIVIDUAL WATER SYSTEM)**	$9,190.00	$0.00
		----------SAFETY---------		
0	1048643	SLOW MOVING VEHICLE SIGN	$170.00	$0.00
0	5007219	HYDRAULIC JACK, 5 TON	$280.00	$0.00
0	9306848	TRIANGLE REFLECTOR FLARES (3)	$95.00	$0.00
0	1095548	LEFT HAND SIDE CAMERA	$610.00	$0.00
		-----SWEEP COMPONENTS-----		
0	1132092	CENTERBROOM	$5,040.00	$0.00
0	1126244	FLOW BLOCKER	$2,460.00	$0.00
		-------TOOLS/TOOL BOX-----		
0	1036150	HYDRANT WRENCH	$100.00	$0.00
0	1057687	TOOL BOX W/TOOLS	$765.00	$0.00
		-----WANDERING HOSE-----		
0	1124584	HYDRAULIC WANDERING HOSE	$5,000.00	$0.00
0	1124585	HYDRAULIC WANDERING HOSE **(USE W/VARIABLE SPEED)**	$5,000.00	$0.00
0	1128249	4 FT. ALUMINUM WANDERING HOSE EXTENSION - REAR MOUNT	$810.00	$0.00
		-----WATER SYSTEM---------		
0	1032484	25' WATER FILL HOSE (ILO 16' 8")	$205.00	$0.00
0	1040094	QUICK DISCONNECT WATER FILL	$530.00	$0.00
0	1059209	HOPPER DELUGE	$1,080.00	$0.00
0	1088582	HOPPER WATER NOZZLES	$600.00	$0.00
0	1070059	AIR PURGE FOR WATER SYSTEM	$410.00	$0.00
0	1111680	LOW PRESSURE WASH DOWN **(NOT COMPATIBLE WITH PM 10)**	$1,225.00	$0.00
0	1132096	HIGH PRESSURE WASHDOWN **(USE W/CENTERBROOM)**	$9,345.00	$0.00
0	1132093	HIGH PRESSURE WASHDOWN	$4,305.00	$0.00
0	1131853	AIR PURGE FOR WATER SYSTEM **(USE W/PM10)**	$420.00	$0.00
		------WIRE MOUNT----------		
0	1121740	WIRE/MOUNT RIGHT & LEFT REAR **(USE W/WANDERING HOSE)**	$1,000.00	$0.00
0	1121741	WIRE/MOUNT R&L REAR **(USE W/OUT WANDERING HOSE)**	$1,000.00	$0.00

MODEL: CROSSWIND SINGLE ENGINE
EFFECTIVE DATE: 01/01/2020
SUPERCEDES ALL PREVIOUS PRICE LISTS
DEALER PRICE LIST (U.S. DOLLARS)

QUANTITY	PART NUMBER	MODEL DESCRIPTION	2020 LIST PRICE	2020 EXTENDED
		----- M2 CHASSIS OPTIONS -----		
0	1063734	CAB PAINT	$4,015.00	$0.00
0	1070639	LED/STOP/TAIL/REAR TURN LIGHT	$665.00	$0.00
0	1071626	PAINT TRUCK RIMS	$1,225.00	$0.00
0	1109607	12" CONVEX MIRRORS	$340.00	$0.00
0	1081188	EXTRA KEY	$55.00	$0.00
0	1081901	SPARE TIRE & WHEEL , BALANCED	$1,325.00	$0.00
0	1081365	AIR RESTRICTOR GUAGE	$890.00	$0.00
0	1111698	FRONT SPRAY BAR **(NOT COMPATIBLE WITH THE STANDARD WATER SYSTEM)**	$595.00	$0.00
0	1111756	FRONT SPRAY BAR **(USE W/PM-10)** **(NOT COMPATIBLE WITH THE STANDARD WATER SYSTEM)**	$595.00	$0.00
0	1090653	DUAL AIR HORN	$1,665.00	$0.00
0	1128650	2 1/2 LB. FIRE EXTINGUISHER	$230.00	$0.00
0	1128651	5 LB. FIRE EXTINGUUISHER	$245.00	$0.00
0	1127569	AUTO LUBE TRUCK/SWEEPER	$7,725.00	$0.00
0	1121736	CAB & (2) REAR LED BEACONS **(USE W/ WANDERING HOSE)**	$2,150.00	$0.00
0	1121737	CAB & (2) REAR LED BEACONS **(USE W/ WANDERING HOSE & AIR HORN)**	$2,150.00	$0.00
0	1121738	CAB & (2) REAR LED BEACONS **(USE W/O WANDERING HOSE)**	$2,150.00	$0.00
0	1121739	CAB & (2) REAR LED BEACONS **(USE W/O WANDERING HOSE & W/O AIR HORN)**	$2,150.00	$0.00
0	1125772	CAB / REAR LED STROBE / LED ARROWSTICK	$3,795.00	$0.00
0	1125773	CAB / REAR WIRE/MOUNT/ LED ARROWSTICK	$3,615.00	$0.00
0	1121162	WIRE/MOUNT CAB & REAR	$1,005.00	$0.00
0	1121163	WIRE/MOUNT CAB & REAR W/GUARD	$1,495.00	$0.00
0	1121164	LED BEACON CAB & REAR	$2,450.00	$0.00
0	1121903	BEACON CAB & REAR WITH ARROWBOARD	4070.00	$0.00
0	1121164	LED STROBE CAB/REAR	2450.00	$0.00
		----PETERBILT CHASSIS OPTIONS----		
0	119463	FRONT SPRAY BAR **(NOT COMPATIBLE WITH THE STANDARD WATER SYSTEM)**	$595.00	$0.00
0	119464	FRONT SPRAY BAR **(USE W/PM-10)** **(NOT COMPATIBLE WITH THE STANDARD WATER SYSTEM)**	$595.00	$0.00
0	1120869	CAB & (2) REAR STROBES **(USE W/ WANDERING HOSE)**	$2,465.00	$0.00
0	1120870	CAB & (2) REAR STROBES **(USE W/O WANDERING HOSE)**	$2,465.00	$0.00
0	1121577	EXTRA KEY	$140.00	$0.00
0	1122155	LED STOP, TAIL, TURN LIGHTS	$675.00	$0.00
0	1123158	2 1/2 LB. FIRE EXTINGUISHER	$230.00	$0.00
0	1123159	5 LB. FIRE EXTINGUUISHER	$260.00	$0.00

MODEL: CROSSWIND SINGLE ENGINE
EFFECTIVE DATE: 01/01/2020
SUPERCEDES ALL PREVIOUS PRICE LISTS
DEALER PRICE LIST (U.S. DOLLARS)

QUANTITY	PART NUMBER	MODEL DESCRIPTION	2020 LIST PRICE	2020 EXTENDED
		----------WARRANTY--------		
	R-NA-2PL	CROSSWIND 2ND YEAR PARTS/LABOR	$2,766.00	$0.00
	R-NA-3PL	CROSSWIND 3RD YEAR PARTS/LABOR	$4,207.00	$0.00
0	EW-AIR-NA-4PL	CROSSWIND 4TH YEAR PARTS/LABOR	$6,420.00	$0.00
0	EW-AIR-NA-5PL	CROSSWIND 5TH YEAR PARTS/LABOR	$8,749.00	$0.00
		FREIGHT RATES		
0	FRT-124-001	SELF SHIPPING DOCK CHARGE	$595.00	$0.00
0	FRT-124-002	FREIGHT-IL,WI,IA,IN,MI,MN,KY	$1,310.00	$0.00
0	FRT-124-003	FREIGHT-TN,WV,PA,NY	$2,850.00	$0.00
0	FRT-124-004	FREIGHT-NH,VT,ME	$3,555.00	$0.00
0	FRT-124-005	FREIGHT-NEW YORK CITY	$4,110.00	$0.00
0	FRT-124-006	FREIGHT-ND,SD,NE,OK,KS,AR,AL,MO	$2,715.00	$0.00
0	FRT-124-007	FREIGHT-AZ,UT	$5,390.00	$0.00
0	FRT-124-008	FREIGHT-CA,NV,ID,OR,WA	$6,355.00	$0.00
0	FRT-124-009	FREIGHT-CHICAGO/MILWAUKEE	$900.00	$0.00
0	FRT-124-010	FREIGHT - FL,LA,TX,NM,CO,WY,MT	$4,145.00	$0.00
0	FRT-124-011	FREIGHT- OH,ST.LOUIS METRO	$1,530.00	$0.00
0	FRT-124-012	FREIGHT- MS,GA,SC,NC,VA,MD	$3,130.00	$0.00
0	FRT-124-013	FREIGHT - RI,DE,CT,NJ,MA	$2,740.00	$0.00
0	FRT-124-014	FREIGHT - LAREDO, TX	$6,700.00	$0.00
0	FRT-124-015	SPECIALIZED TRANSPORT EQUIPMENT	$1,030.00	$0.00
			SUB TOTAL	**$2,810.00**
		-----DISCOUNTS-----		
0	DISC-124-ADDL	ADDITIONAL DISCOUNT	$0.00	$0.00
0	DISC-124-PROMO	PROMO DISCOUNT	$0.00	$0.00
		SPECIAL RFQ OPTIONS / OTHER DESCRIPTIONS		
			GRAND TOTAL	**$2,810.00**

1 2 3 $ 4 5

MODEL: CROSSWIND SHARED POWER TIER 4F
EFFECTIVE DATE: 01/01/2020
SUPERCEDES ALL PREVIOUS PRICE LISTS
DEALER PRICE LIST (U.S. DOLLARS)

Purchase Order #	**Equipped with** MEMORY SWEEP	**Ship To Address:**
Order Date:		
Delivery Date Requirment If Any:		**State Penalty Clause If Applicable:**

QUANTITY	PART NUMBER	MODEL DESCRIPTION	2020 LIST PRICE	2020 EXTENDED
		ECOINFUSED TIER 4F ENGINES		
0	1120745	**CROSSWIND - DUAL TIER 4F 74HP - M2**	$136,125	$0.00
0		**Equipped with MemorySweep®**; Tier 4F emissions, John Deere 4045, Turbocharged diesel engine, 8.0 cu. Yd. Hopper, right and left side brooms, sweeper is powder coated from powder coatings chart 2003/N with powder coated gray undercarriage and includes the standard features listed below.		
0	1120890	**CROSSWIND - DUAL TIER 4F 74HP - PETERBILT**	$136,125	$0.00
0		**Equipped with MemorySweep®**; Tier 4F emissions, John Deere 4045, Turbocharged diesel engine, 8.0 cu. Yd. Hopper, right and left side brooms, sweeper is powder coated from powder coatings chart 2003/N with powder coated gray undercarriage and includes the standard features listed below.		
0	1120891	**CROSSWIND - DUAL TIER 4F 74HP - IH**	$135,125	$0.00
0		**Equipped with MemorySweep®**; Tier 4F emissions, John Deere 4045, Turbocharged diesel engine, 8.0 cu. Yd. Hopper, right and left side brooms, sweeper is powder coated from powder coatings chart 2003/N with powder coated gray undercarriage and includes the standard features listed below.		
		CHASSIS		
0	1127332	AUTOCAR XPERT 2017E (NON STOCKED CHASSIS)	CONTACT INSIDE SALES	$0.00
0	1119154	M2 DUAL STEER (2013 EMISSIONS) SHARED POWER 74HP	CONTACT INSIDE SALES	$0.00
0	1124555	PETERBILT RIGHT HAND STEER (NON STOCKED CHASSIS) SINGLE SPEED REAR AXLE	CONTACT INSIDE SALES	$0.00
0	1124556	PETERBILT DUAL STEER (NON STOCKED CHASSIS) SINGLE SPEED REAR AXLE	CONTACT INSIDE SALES	$0.00
0	1124546	IH DUAL STEER (NON STOCKED CHASSIS)	CONTACT INSIDE SALES	$0.00
		CHASSIS MOUNTING CHARGE		
0	1122038	M2 CHASSIS - CHASSIS ALTERATIONS	$2,680	$0.00
0	SPECIAL	AUTOCAR XPERT 164" WB - CHASSIS ALTERATIONS	$2,680	$0.00
0	SPECIAL	PETERBILT CHASSIS - CHASSIS ALTERATIONS	$2,680	$0.00
0	SPECIAL	IH CHASSIS - CHASSIS ALTERATIONS	$2,680	$0.00
0	SPECIAL	CUSTOMER SUPPLIED CHASSIS ALTERATIONS	CONTACT INSIDE SALES	$0.00
0	SPECIAL	CUSTOMER SUPPLIED HANDLING CHARGE	$3,690	$0.00

NOTE: Customer Supplied Chassis requires both the Chassis Alterations and the Handling Charge

		APPLICATION - SPECIFIC PACKAGES		
0	SPECIAL	**CROSSWIND DUAL FSX PACKAGE**	CONTACT INSIDE SALES	$0.00
0		Equipped with FSX pickup head ILO the standard Crosswind pickup head, 11" diameter suction hose and polypropylene side broom segments.		
1	4820001	PAINT CAB STANDARD WHITE	N/C	$0.00
1	4810001	PAINT SWEEPER STANDARD WHITE	N/C	$0.00

NOTE: A BODY includes the cost of Elgin standard white finish paint. It does not however, include the price of the chas

NOTE: The chassis being supplied by a customer or dealer **must** comply completely with all Elgin requirements or the

NOTE: For cost of sweeper mounted on any other chassis, consult factory.

NOTE: One year warranty on all Elgin supplied parts and labor. Consult your Elgin dealer for full warranty details.

MODEL: CROSSWIND SHARED POWER TIER 4F
EFFECTIVE DATE: 01/01/2020
SUPERCEDES ALL PREVIOUS PRICE LISTS
DEALER PRICE LIST (U.S. DOLLARS)

QUANTITY	PART NUMBER	MODEL DESCRIPTION	2020 LIST PRICE	2020 EXTENDED

STANDARD FEATURES

1	0702253	CROSSWIND SHARED POWER 74HP PARTS MANUAL	STANDARD	$0.00
1	0701674	CROSSWIND SHARED POWER 74HP OPERATORS MANUAL	STANDARD	$0.00
1	0704046	JOHN DEERE OPERATORS	STANDARD	$0.00
1	0704047	JOHN DEERE PARTS	STANDARD	$0.00
1	0730166	BROOM MEASUREMENT RULER	STANDARD	$0.00
1	1032481	16' 8" WATER FILL HOSE	STANDARD	$0.00
1	0701705	MACHINE DELIVERY PACKET	STANDARD	$0.00
1	0702020	ELGIN SAFETY MANUAL	STANDARD	$0.00

Patented Shared Power System
Alternator, 95 amp
Auto Shutdown, Aux. Engine
Backup Alarm, electric
Blower, HARDOX®500 steel with linatex lined housing
Brooms, hydraulic rotation
Brooms, Dual
Camera, rear mounted
Console, w/rocker switches for all sweep functions, with full gauge package including tachometer, engine hour meter, oil pressure indicator, coolant temperature, voltmeter and fuel lever indicator, water level gauge and warning lights for hopper "up", hopper rear door "open" and hopper "full", with auxiliary engine, RPM control, side broom down pressure controls and automotive style blade fuses
Doors, access fiberglass doors provide easy service and maintenance on auxiliary engine, hydraulic and electrical system
Electronic Actuated Throttle, sweep resume/sweep transport/reverse pick-up
Fuel Water Separator on Aux Engine
Hopper rear door, hydraulically opened/closed and locked/unlocked with external manual controls
Hose, hydrant fill, 16'8" (5080 mm) with coupling
LED Clearance Lights
Lights; rear clearance and rear identification
Manuals, operator and parts
Mirrors, West Coast type with 8" convex inserts, one each side
Pick-up head, hydraulically operated, 14" (355 mm) outside diameter pressure hose, 12-3/4" (324mm) inside diameter suction hose with quick disconnect on suctions side
Water system; one (1) rocker switch with HI / LOW setting, with manual valves for water control
Spray nozzles, sixteen (16), seven (7) in the pick-up head, three (3) in the suction nozzle, three (3) at each side broom
Side Broom Outer Position Stop
Trans Oil Cooler
Vacuum enhancer, external manually operated
Water tank, molded polyethylene, 240 gallons (907L)
Water pre-filter, hydrant fill hose
In Cab hopper dump

		MEMORY SWEEP® HAS BEEN SELECTED		
1	1120875	***MEMORY SWEEP®	$2,810.00	$2,810.00
		ELGIN SWEEPER EXCLUSIVE SWEEP RESUME FEATURE; Provides in-cab feedback for operator awareness of sidebroom tilt angle, vacuum enchancer percent open/close and one switch sweep resume of sweep functions. Elgin's optional Memory Sweep ® system allows the operator to resume all previous sweep settings, even broom tilt (if so equipped), with one touch control. This feature enhances productivity and reduces fatigue. Memory Sweep incorporates a multi-screen display that indicates system diagnostics as well as optional features such as broom tilt angle, vacuum enhancer position, and broom hours.		

MODEL: CROSSWIND SHARED POWER TIER 4F
EFFECTIVE DATE: 01/01/2020
SUPERCEDES ALL PREVIOUS PRICE LISTS
DEALER PRICE LIST (U.S. DOLLARS)

QUANTITY	PART NUMBER	MODEL DESCRIPTION	2020 LIST PRICE	2020 EXTENDED
STEP	# 2	SELECT PRODUCT ENHANCEMENTS		
		--------SWEEPER COMPONENTS---------		
0	1114911	***BROOM HOURS **WITH IN-CAB DISPLAY**	$115.00	$0.00
0	1119215	***VACUUM ENHANCER IN-CAB CONTROL **WITH IN-CAB DISPLAY**	$515.00	$0.00
		----------SIDE BROOMS OPTIONS----------		
0	1111176	RIGHT HAND GUTTER BROOM TILT **WITH IN-CAB DISPLAY**	$1,080.00	$0.00
0	1111175	LEFT HAND GUTTER BROOM TILT **WITH IN-CAB DISPLAY**	$1,080.00	$0.00
0	1113732	VARIABLE SPEED - DUAL SIDEBROOMS	$3,495.00	$0.00
		ALL WORK & FLOOD LIGHTS ARE EACH CONTROLLED USING INDIVIDUAL ROCKER S		
		NOTE: Sidebroom Lights are NOT STANDARD		
0	1120822	INDVIDUAL SWITCHES FOR DUAL SIDEBROOM LIGHTS-LED	$800.00	$0.00
0	1120823	INDVIDUAL SWITCHES FOR RIGHT HAND SIDEBROOM LIGHT-LED	$735.00	$0.00
0	1120824	INDIVIDUAL SWITCHES FOR DUAL REAR FLOOD LIGHTS-LED	$915.00	$0.00
0	1120825	INDIVIDUAL SWITCHES FOR DUAL SIDEBROOM & REAR FLOOD LTS-LED	$1,700.00	$0.00
		-----WATER SYSTEM (CHOOSE UP TO ONE)-----		
0	1110823	FUNCTIONAL CONTROL OF WATER SYSTEM	$780.00	$0.00
		FUNCTIONAL CONTROL OF WATER SYSTEM dispenses water with the use of the sweeper function rocker switch. Not compatible with Individual control water system. Not compatibale with PM-10 water system.		
		OR		
0	1113730	***INDIVIDUAL SWITCHES FOR WATER SYSTEM CONTROL **(NOT COMPATIBLE WITH PM10)**	$1,430.00	$0.00
		----------SIDE BROOMS----------		
0	1112947	***DUAL SIDE BROOM SCRUBBING POSITION	$1,740.00	$0.00
		SIDE BROOM SCRUBBING POSITION provides additional switch on console to allow the side brooms to sweep inboard in front of the pickup head in the scrubbing position.		

MODEL: CROSSWIND SHARED POWER TIER 4F
EFFECTIVE DATE: 01/01/2020
SUPERCEDES ALL PREVIOUS PRICE LISTS
DEALER PRICE LIST (U.S. DOLLARS)

QUANTITY	PART NUMBER	MODEL DESCRIPTION	2020 LIST PRICE	2020 EXTENDED
STEP	# 3	SELECT OPTIONS / ACCESSORIES		
		--------ALARMS----------		
0	1120936	BACKUP ALARM, SMART	$455.00	$0.00
		-----AUTO LUBE-----		
0	1120877	AUTO LUBE SWEEPER ONLY	$4,515.00	$0.00
		----------BROOMS----------		
0	1078904	DUAL POLY BROOMS	$235.00	$0.00
		------DECALS------		
1	1090150	RED LOGO/CROSSWIND	$0.00	$0.00
0	1090153	WHITE LOGO/CROSSWIND	$0.00	$0.00
0	1122929	SHIP DECALS AND SWOOSH LOOSE IN HOPPER	$0.00	$0.00
		----------GAUGES----------		
0	1061886	HYDRAULIC OIL LEVEL GUAGE W/THERMOMETER	$195.00	$0.00
		------HOPPER OPTIONS------		
0	1085864	RIGHT HAND INSPECTION DOOR	$465.00	$0.00
0	1085882	LEFT HAND INSPECTION DOOR	$465.00	$0.00
0	1117147	STAINLESS STEEL RIGHT HAND INSPECTION DOOR	$490.00	$0.00
0	1117148	STAINLESS STEEL LEFT HAND INSPECTION DOOR	$490.00	$0.00
0	1127045	RIGHT HAND INSPECTION DOOR & STEP	$825.00	$0.00
0	1127046	LEFT HAND INSPECTION DOOR & STEP	$825.00	$0.00
0	1085887	6" HOPPER DRAIN	$860.00	$0.00
0	1071234	STAINLESS STEEL HOPPER SCREENS	$1,630.00	$0.00
0	1127047	STAINLESS STEEL RIGHT HAND INSPECTION DOOR & STEP	$845.00	$0.00
0	1127048	STAINLESS STEEL LEFT HAND INSPECTION DOOR & STEP	$845.00	$0.00
0	1119271	STAINLESS STEEL HOPPER DOOR WITH HOPPER DELUGE	$1,080.00	$0.00
		-----LIFELINER HOPPER----		
0	1092227	LIFELINER HOPPER SYSTEM W/WARRANTY	$8,300.00	$0.00
0	1122472	STAINLESS STEEL- HOPPER W/WARRANTY	$17,555.00	$0.00
0	1122416	STAINLESS STEEL- HOPPER W/W" HOPPER DRAIN /WARRANTY	$18,850.00	$0.00
		-----MANUALS----		
0	0702253	CROSSWIND SHARED POWER 74HP PARTS MANUAL	$90.00	$0.00
0	0701674	CROSSWIND SHARED POWER 74HP OPERATORS MANUAL	$55.00	$0.00
0	0702485	CROSSWIND SHARED POWER 74HP SERVICE MANUAL	$95.00	$0.00
0	0704046	JOHN DEERE OPERATORS	$55.00	$0.00
0	0704047	JOHN DEERE PARTS	$110.00	$0.00
0	0704048	JOHN DEERE SERVICE	$190.00	$0.00
		-----LIGHTING-----		
0	1121132	WIRE/MOUNT REAR	$435.00	$0.00
0	1121133	WIRE/MOUNT REAR W/GUARD	$675.00	$0.00
0	1121098	(2) REAR LED BEACONS **(USE W/WANDERING HOSE)**	$1,515.00	$0.00
0	1121099	(2) REAR LED BEACONS **(USE W/O WANDERING HOSE)**	$1,515.00	$0.00
0	1121121	REAR LED BEACON / LED ARROWBOARD	$3,105.00	$0.00
0	1121096	REAR LED BEACON / LED ARROWSTICK	$2,965.00	$0.00
0	1125776	LED ARROWSTICK	2380.00	$0.00
0	1121066	(2) REAR LED BEACONS / LED ARROWSTICK **(USE W/WANDERING HOSE)**	$3,920.00	$0.00
0	1121067	(2) REAR LED BEACONS / LED ARROWSTICK **(USE W/O WANDERING HOSE)**	$3,920.00	$0.00
0	1120887	REAR LED BEACON	$980.00	$0.00

MODEL: CROSSWIND SHARED POWER TIER 4F
EFFECTIVE DATE: 01/01/2020
SUPERCEDES ALL PREVIOUS PRICE LISTS
DEALER PRICE LIST (U.S. DOLLARS)

QUANTITY	PART NUMBER	MODEL DESCRIPTION	2020 LIST PRICE	2020 EXTENDED
		----------PAINT----------		
0	4811018	PAINT SWEEPER YELLOW RAL 1018	$525.00	$0.00
0	4811023	PAINT SWEEPER YELLOW RAL 1023	$525.00	$0.00
0	4811037	PAINT SWEEPER YELLOW RAL 1037	$525.00	$0.00
0	4813020	PAINT SWEEPER TRAFFIC RED RAL 3020	$525.00	$0.00
0	SPECIAL	PAINT SWEEPER OTHER RAL THAN ABOVE	1285.00	$0.00
0	SPECIAL	PAINT SWEEPER NON RAL COLOR	3890.00	$0.00
		----------PM10 COMPLIANCE----------		
0	1120896	PM-10 WATER SYSTEM **(NOT COMPATIBLE WITH FUNCTIONAL OR INDIVIDUAL WATER SYSTEM)**	$3,150.00	$0.00
0	1124212	PM-10 WATER SYSTEM USE WITH SS HOPPER **(NOT COMPATIBLE WITH FUNCTIONAL OR INDIVIDUAL WATER SYSTEM)**	$3,150.00	$0.00
0	1119000	PM-10 WATER SYSTEM USE WITH CENTERBROOM **(NOT COMPATIBLE WITH FUNCTIONAL OR INDIVIDUAL WATER SYSTEM)**	$3,150.00	$0.00
0	1124211	PM-10 WATER SYSTEM USE WITH CENTERBROOM AND SS HOPPER **(NOT COMPATIBLE WITH FUNCTIONAL OR INDIVIDUAL WATER SYSTEM)**	$3,150.00	$0.00
		----------SAFETY---------		
0	1048643	SLOW MOVING VEHICLE SIGN	$170.00	$0.00
0	5007219	HYDRAULIC JACK, 5 TON	$280.00	$0.00
0	9306848	TRIANGLE REFLECTOR FLARES (3)	$95.00	$0.00
0	1095548	LEFT HAND SIDE CAMERA	$610.00	$0.00
		-----SWEEP COMPONENTS-----		
0	1119160	CENTERBROOM	$5,040.00	$0.00
0	1126244	FLOW BLOCKER	$2,460.00	$0.00
		-----SWEEPER ENGINE-------		
0	1120793	TURBO II PRECLEANER	$510.00	$0.00
0	6063004	ADDITIONAL IGNITION KEY	$50.00	$0.00
0	1121514	AUXILIARY HYDRAULIC PUMP **USE WITHOUT** IN-CAB HOPPER DUMP [SHARED POWER]	$1,410.00	$0.00
0	1121515	AUXILIARY HYDRAULIC PUMP USE **WITH** IN-CAB HOPPER DUMP [SHARED POWER]	$1,410.00	$0.00
		-------TOOLS/TOOL BOX-----		
0	1036150	HYDRANT WRENCH	$100.00	$0.00
0	1053426	TOOL KIT	$790.00	$0.00
0	1057687	TOOL BOX W/TOOLS	$765.00	$0.00
		-----WANDERING HOSE-----		
0	1119217	HYDRAULIC WANDERING HOSE	$5,000.00	$0.00
0	1120863	HYDRAULIC WANDERING HOSE **(USE W/VARIABLE SPEED)**	$5,000.00	$0.00
0	1059263	4 FT. ALUMINUM WANDERING HOSE EXTENSION - REAR MOUNT	$810.00	$0.00
0	1127864	(2) 4 FT. ALUMINUM WANDERING HOSE EXTENSION REAR MOUNT	$1,620.00	$0.00
		-----WATER SYSTEM---------		
0	1032484	25' WATER FILL HOSE (ILO 16' 8")	$205.00	$0.00
0	1040094	QUICK DISCONNECT WATER FILL	$530.00	$0.00
0	1059209	HOPPER DELUGE	$1,080.00	$0.00
0	1088582	HOPPER WATER NOZZLES	$600.00	$0.00
0	1070059	AIR PURGE FOR WATER SYSTEM	$410.00	$0.00
0	1120809	LOW PRESSURE WASH DOWN **(NOT COMPATIBLE WITH PM 10)**	$1,250.00	$0.00
0	1122044	HIGH PRESSURE WASHDOWN **(USE W/CENTERBROOM)**	$4,305.00	$0.00
0	1122043	HIGH PRESSURE WASHDOWN	$4,305.00	$0.00
0	1100507	AIR PURGE FOR WATER SYSTEM **(USE W/PM10)**	$420.00	$0.00
		------WIRE MOUNT----------		
0	1121132	WIRE/MOUNT REAR	$435.00	$0.00
0	1121740	WIRE/MOUNT RIGHT & LEFT REAR **(USE W/WANDERING HOSE)**	$1,000.00	$0.00
0	1121741	WIRE/MOUNT R&L REAR **(USE W/OUT WANDERING HOSE)**	$1,000.00	$0.00
0	1121098	WIRE MOUNT R&L REAR BEACON **(USE W/WANDERING HOSE)**	1515.00	$0.00
0	1121099	WIRE MOUNT R&L REAR BEACON **(USE W/OUT WANDERING HOSE)**	1515.00	$0.00

MODEL: CROSSWIND SHARED POWER TIER 4F
EFFECTIVE DATE: 01/01/2020
SUPERCEDES ALL PREVIOUS PRICE LISTS
DEALER PRICE LIST (U.S. DOLLARS)

QUANTITY	PART NUMBER	MODEL DESCRIPTION	2020 LIST PRICE	2020 EXTENDED
		---- INTERNATIONAL CHASSIS OPTIONS----		
0	1117228	2 1/2 LB. FIRE EXTINGUISHER	$230.00	$0.00
0	1091822	RADIO AM/FM/CD	$950.00	$0.00
0	1117229	5 LB. FIRE EXTINGUISHER	$255.00	$0.00
0	1070639	LED / STOP / TAIL / REAR TURN LIGHT	$665.00	$0.00
0	1111698	FRONT SPRAY BAR	$595.00	$0.00
0	1111756	FRONT SPRAY BAR (USE W/PM10)	$595.00	$0.00
0	1121177	CAB / (2) REAR LED BEACON (USE W/WANDERING HOSE	$2,740.00	$0.00
0	1121178	CAB / (2) REAR LED BEACON (USE W/ OUT WANDERING HOSE	$2,755.00	$0.00
0	1121891	WIRE/MOUNT CAB / REAR WITH LED ARROWBOARD	$2,840.00	$0.00
0	1121892	CAB / REAR LED BEACON WITH LED ARROWBOARD	$4,070.00	$0.00
0	1121896	CAB / REAR WIRE/MOUNT	$1,000.00	$0.00
0	1121897	CAB / REAR LED BEACON	$1,965.00	$0.00
		----- M2 CHASSIS OPTIONS -----		
0	1063734	CAB PAINT	$4,015.00	$0.00
0	1070639	LED/STOP/TAIL/REAR TURN LIGHT	$665.00	$0.00
0	1071626	PAINT TRUCK RIMS	$1,225.00	$0.00
0	1080756	LEFT HAND FENDER MOUNTED MIRROR	$585.00	$0.00
0	1109607	12" CONVEX MIRRORS	$340.00	$0.00
0	1081188	EXTRA KEY	$55.00	$0.00
0	1081901	SPARE TIRE & WHEEL , BALANCED	$1,325.00	$0.00
0	1081909	SINGLE ARM REST - VINYL **(ONLY W/AIR RIDE SEATS)**	$390.00	$0.00
0	1081910	DUAL ARM REST - VINYL **(ONLY W/AIR RIDE SEATS)**	$730.00	$0.00
0	1081911	SINGLE ARM REST - CLOTH **(ONLY W/AIR RIDE SEATS)**	$390.00	$0.00
0	1081912	DUAL ARM REST - CLOTH **(ONLY W/AIR RIDE SEATS)**	$730.00	$0.00
0	1111698	FRONT SPRAY BAR **(NOT COMPATIBLE WITH THE STANDARD WATER SYSTEM)**	$595.00	$0.00
0	1111756	FRONT SPRAY BAR **(USE W/PM-10)** (**NOT COMPATIBLE WITH THE STANDARD WATER SYSTEM)**	$595.00	$0.00
0	1090653	DUAL AIR HORN	$1,665.00	$0.00
0	1118356	2 1/2 LB. FIRE EXTINGUISHER	$230.00	$0.00
0	1118357	5 LB. FIRE EXTINGUUISHER	$245.00	$0.00
0	1121736	CAB & (2) REAR LED BEACONS **(USE W/ WANDERING HOSE)**	$2,150.00	$0.00
0	1121737	CAB & (2) REAR LED BEACONS **(USE W/ WANDERING HOSE & AIR HORN)**	$2,150.00	$0.00
0	1121738	CAB & (2) REAR LED BEACONS **(USE W/O WANDERING HOSE)**	$2,150.00	$0.00
0	1121739	CAB & (2) REAR LED BEACONS **(USE W/O WANDERING HOSE & W/O AIR HORN)**	$2,150.00	$0.00
0	1121162	WIRE/MOUNT CAB & REAR	$1,005.00	$0.00
0	1121163	WIRE/MOUNT CAB & REAR W/GUARD	$1,495.00	$0.00
0	1121164	LED BEACON CAB & REAR	$2,450.00	$0.00
0	1121901	WIRE/MOUNT CAB / REAR W/LED ARROWBOARD	$2,840.00	$0.00
0	1121902	WIRE/MOUNT CAB / REAR W/ LED ARROWBOARD **(USE W/AIR HORN)**	$2,810.00	$0.00
0	1121903	CAB / REAR LED BEACON W/LED ARROWBOARD	$4,070.00	$0.00
0	1121904	CAB / REAR LED BEACON W/LED ARROWBOARD **(USE W/AIR HORN)**	$4,050.00	$0.00
		----PETERBILT CHASSIS OPTIONS----		
0	1119463	FRONT SPRAY BAR **(NOT COMPATIBLE WITH THE STANDARD WATER SYSTEM)**	$595.00	$0.00
0	1119464	FRONT SPRAY BAR **(USE W/PM-10)** (**NOT COMPATIBLE WITH THE STANDARD WATER SYSTEM)**	$595.00	$0.00
0	1120883	17" WORK PLATFORM **(NOT COMPATIABLE W/EXTRA WATER TANK)**	$3,425.00	$0.00
0	1120869	CAB & (2) REAR STROBES **(USE W/ WANDERING HOSE)**	$2,465.00	$0.00
0	1120870	CAB & (2) REAR STROBES **(USE W/O WANDERING HOSE)**	$2,465.00	$0.00
0	1121577	EXTRA KEY	$140.00	$0.00
0	1122155	LED STOP, TAIL, TURN LIGHTS	$675.00	$0.00
0	1123158	2 1/2 LB. FIRE EXTINGUISHER	$230.00	$0.00
0	1123159	5 LB. FIRE EXTINGUUISHER	$260.00	$0.00

MODEL: CROSSWIND SHARED POWER TIER 4F
EFFECTIVE DATE: 01/01/2020
SUPERCEDES ALL PREVIOUS PRICE LISTS
DEALER PRICE LIST (U.S. DOLLARS)

QUANTITY	PART NUMBER	MODEL DESCRIPTION	2020 LIST PRICE	2020 EXTENDED
		----------WARRANTY--------		
0	EW-AIR-NA-2PL	CROSSWIND 2ND YEAR PARTS/LABOR	$2,766.00	$0.00
0	EW-AIR-NA-3PL	CROSSWIND 3RD YEAR PARTS/LABOR	$4,207.00	$0.00
0	EW-AIR-NA-4PL	CROSSWIND 4TH YEAR PARTS/LABOR	$6,420.00	$0.00
0	EW-AIR-NA-5PL	CROSSWIND 5TH YEAR PARTS/LABOR	$8,749.00	$0.00
		FREIGHT RATES		
0	FRT-124-001	SELF SHIPPING DOCK CHARGE	$595.00	$0.00
0	FRT-124-002	FREIGHT-IL,WI,IA,IN,MI,MN,KY	$1,310.00	$0.00
0	FRT-124-003	FREIGHT-TN,WV,PA,NY	$2,850.00	$0.00
0	FRT-124-004	FREIGHT-NH,VT,ME	$3,555.00	$0.00
0	FRT-124-005	FREIGHT-NEW YORK CITY	$4,110.00	$0.00
0	FRT-124-006	FREIGHT-ND,SD,NE,OK,KS,AR,AL,MO	$2,715.00	$0.00
0	FRT-124-007	FREIGHT-AZ,UT	$5,390.00	$0.00
0	FRT-124-008	FREIGHT-CA,NV,ID,OR,WA	$6,355.00	$0.00
0	FRT-124-009	FREIGHT-CHICAGO/MILWAUKEE	$900.00	$0.00
0	FRT-124-010	FREIGHT - FL,LA,TX,NM,CO,WY,MT	$4,145.00	$0.00
0	FRT-124-011	FREIGHT- OH,ST.LOUIS METRO	$1,530.00	$0.00
0	FRT-124-012	FREIGHT- MS,GA,SC,NC,VA,MD	$3,130.00	$0.00
0	FRT-124-013	FREIGHT - RI,DE,CT,NJ,MA	$2,740.00	$0.00
0	FRT-124-014	FREIGHT - LAREDO, TX	$6,700.00	$0.00
0	FRT-124-015	SPECIALIZED TRANSPORT EQUIPMENT	$1,030.00	$0.00
			SUB TOTAL	**$2,810.00**
		-----DISCOUNTS-----		
0	DISC-124-ADDL	ADDITIONAL DISCOUNT	$0.00	$0.00
0	DISC-124-PROMO	PROMO DISCOUNT	$0.00	$0.00
		SPECIAL RFQ OPTIONS / OTHER DESCRIPTIONS		
			GRAND TOTAL	**$2,810.00**

MODEL: 4M EAGLE
EFFECTIVE DATE:01/01/2020
SUPERCEDES ALL PREVIOUS PRICE LISTS
DEALER PRICE LIST (U.S. DOLLARS)
REV #

Purchase Order #	
Order Date:	
Delivery Date Requirment If Any:	

Ship To Address:
State Penalty Clause If Applicable:

QUANTITY	PART NUMBER	MODEL DESCRIPTION	2020 LIST PRICE	2020 EXTENDED
0	1117695	**4M EAGLE - DUAL (M2)**	$181,050	$0.00
		Hydraulically driven left and right side brooms and variable height, right side dumping, 4.5 cu. yd. hopper, sweeper is powder coated from powder coatings chart 2003/N with powder coated gray undercarriage and includes the standard features listed below.		
0	1121718	**4M EAGLE - DUAL (PETERBILT)**	$181,050	$0.00
		Hydraulically driven left and right side brooms and variable height, right side dumping, 4.5 cu. yd. hopper, sweeper is powder coated from powder coatings chart 2003/N with powder coated gray undercarriage and includes the standard features listed below.		
0	1122024	**4M EAGLE - DUAL (AUTOCAR)**	$181,050	$0.00
		Hydraulically driven left and right side brooms and variable height, right side dumping, 4.5 cu. yd. hopper, sweeper is powder coated from powder coatings chart 2003/N with powder coated gray undercarriage and includes the standard features listed below.		
0	1122458	**4M EAGLE - DUAL (IH)**	$181,050	$0.00
		Hydraulically driven left and right side brooms and variable height, right side dumping, 4.5 cu. yd. hopper, sweeper is powder coated from powder coatings chart 2003/N with powder coated gray undercarriage and includes the standard features listed below.		

CHASSIS

0	1124567	M2 DUAL STEER (2013 EMISSIONS) (LIMITED)	CALL INSIDE SALES	$0.00
0	1122276	PETERBILT RIGHT HAND STEER (NON STOCKED CHASSIS) SINGLE SPEED REAR AXLE	CALL INSIDE SALES	$0.00
0	1122277	PETERBILT DUAL STEER (NON STOCKED CHASSIS) SINGLE SPEED REAR AXLE	CALL INSIDE SALES	$0.00
0	1124539	IH DUAL STEER	CALL INSIDE SALES	$0.00

CHASSIS MOUNTING CHARGE

0	1116594	M2 - CHASSIS ALTERATIONS	$2,680	$0.00
0	1122411	IH - CHASSIS ALTERATIONS	$2,680	$0.00
0	1120762	PETERBILT - CHASSIS ALTERATIONS	$2,680	$0.00
0	SPECIAL	CUSTOMER SUPPLIED CHASSIS ALTERATIONS	CONTACT INSIDE SALES	$0.00
0	CSC-HANDLING	CUSTOMER SUPPLIED HANDLING CHARGE	$3,690	$0.00

NOTE: Customer Supplied Cassis Requires Both The Chassis Alterations and the Handling Charge

1

1	4820001	PAINT CAB STANDARD WHITE	N/C	$0.00
1	4810001	PAINT SWEEPER STANDARD WHITE	N/C	$0.00

NOTE: A BODY includes the cost of Elgin standard white finish paint. It does not however, include the price of the ch

NOTE: The chassis being supplied by a customer or dealer **must** comply completely with all Elgin requirements or th

NOTE: For cost of sweeper mounted on any other chassis, consult factory.

NOTE: One year warranty on all Elgin supplied parts and labor. Consult your Elgin dealer for full warranty details.

MODEL: 4M EAGLE
EFFECTIVE DATE:01/01/2020
SUPERCEDES ALL PREVIOUS PRICE LISTS
DEALER PRICE LIST (U.S. DOLLARS)
REV #

STANDARD FEATURES

Aux-engine;
Two-stage dry type with restriction indicator (at engine) and precleaner
Broom side, in-cab reversable, 46 "steel vertical digger 5 segment
Broom side, pneumatic floating suspension, pneumatic deploy
Broom, main, 34" diameter, 60" wide prefab disposable
Camera, Rear with in-cab monitor
Conveyor, cleated belt, adjustable height
Conveyor flush out system
Conveyor raise in reverse
Conveyor stall alarm
Spring Assist Dirt shoes, rubber
Electric backup alarm
Engine, sweeper, diesel, tier 4 FINAL, 74 HP
Hopper inspection door
Hopper,4.5 cu yd with window and skylight
Hopper up visual/audible indicator
Hopper, variable high dump, 38" -**11' 02"**
Hose, hydrant fill, 16'8" (5080 mm) with strainer and coupling
Hydraulic oil level gauge
and in-cab level light
Lights, automatic backup
Lights, combination tail/stop, separate amber signal
Lights, flood light, one per broom left,right,and main broom (3)
Manuals, operator and parts
Rear broom cover and anti-carryover wrap
Rear broom spray bar
Reflectors, set of 2
Sweep resume / raise in reverse
Tactile controls for all sweep functions
Tool storage
Water fill, anti-siphon
Water level indicator in-cab
Water Pump, electric diaphragm
Water tank, molded polyethylene, 360 gallon total
nominal capacity

QUANTITY	PART NUMBER	MODEL DESCRIPTION	2020 LIST PRICE	2020 EXTENDED
		--------ALARMS----------		
0	1104970	HOPPER UP CONSTANT ALARM	$375.00	$0.00
0	1101528	LATCHING ELEVATOR REVERSE AND ALARM	$420.00	$0.00
0	1104705	HOPPER FULL INDICATOR	$830.00	$0.00
		-------AUTO LUBE----------		
0	1101559	AUTO LUBE-SWEEPER (DUAL)	$5,240.00	$0.00
0	1101560	AUTOLUBE - SWEEPER & TRUCK	$7,475.00	$0.00
		-------AUTO SHUTDOWN------		
0	1101380	HIGH TEMPERTURE HYDRAULIC OIL - SHUTDOWN	$190.00	$0.00
0	1102798	HYDRAULIC LEVEL SHUTDOWN	$190.00	$0.00
		----------BROOMS---------		
0	1058158	STRIP MAINBROOM (URB)	$470.00	$0.00
0	1077151	URB STRIP MAINBROOM W/CENTER SWEEP MANDREL	$470.00	$0.00
0	1116786	VARIABLE SPEED	$2,385.00	$0.00
0	1096691	DEDUCT MAINBROOM & CORE	-$222.72	$0.00
0	1118838	MAINBROOM SPRING SUSPENSION **(NOT COMPATIBLE WITH HYDRAULIC CONTROL SIDEBROOMS)**	$0.00	$0.00
0	1118869	HYDRAULIC CONTROL SIDEBROOMS **(COMPATIABLE WITH CONVENTIONAL CHASSIS ONLY)**	$0.00	$0.00
0	1122691	HYDRAULIC CONTROL SIDEBROOMS **(COMPATIABLE WITH CABOVER CHASSIS ONLY)**	$0.00	$0.00
0	1109605	EXTENDED REACH RIGHT HAND SIDEBROOM **(AUTOCAR & PETERBILT CHASSIS)**	$1,435.00	$0.00
0	1105519	EXTENDED REACH RIGHT AND LEFT HAND SIDEBROOMS **(AUTOCAR & PETERBILT CHASSIS)**	$2,010.00	$0.00
0	1120361	EXTENDED REACH RIGHT HAND SIDEBROOM **(M2 & IH CHASSIS)**	$1,435.00	$0.00
0	1120782	EXTENDED REACH RIGHT AND LEFT HAND SIDEBROOMS **(M2 & IH CHASSIS)**	$2,010.00	$0.00
		-----CONVEYOR/ELEVATOR----		
0	1106049	HEAVY DUTY LOWER ROLLER	$1,070.00	$0.00
0	1118107	HIGH SPEED CONVEYOR MOTOR	$490.00	$0.00
0	1120662	SQUEEGEE CONVEYOR (ILO STANDARD RUBBER BELT)	$0.00	$0.00
		--------DECALS----------		
0	1102783	RED LOGO/SWOOSH-EAGLE	$0.00	$0.00
0	1102784	WHITE LOGO/SWOOSH - EAGLE	$0.00	$0.00
0	1122929	SHIP DECALS AND SWOOSH LOOSE IN HOPPER	$0.00	$0.00

MODEL: 4M EAGLE
EFFECTIVE DATE:01/01/2020
SUPERCEDES ALL PREVIOUS PRICE LISTS
DEALER PRICE LIST (U.S. DOLLARS)
REV #

QUANTITY	PART NUMBER	MODEL DESCRIPTION	2020 LIST PRICE	2020 EXTENDED
		----------GAUGES----------		
0	1101379	BROOM HOUR METERS	$405.00	$0.00
0	1111656	HYDRAULIC OIL TEMPERTURE DISPLAY (IN CAB)	$320.00	$0.00
0	1119940	IN-CAB AUXILIARY ENGINE AIR RESTRICTION GAUGE	$815.00	$0.00
		----------HOPPER----------		
0	1101951	STAINLESS STEEL HOPPER	$9,565.00	$0.00
0	1115491	EXTENDED HOPPER CHUTE	$1,040.00	$0.00
		-----EXTRA MANUALS----		
0	0701682	EAGLE OPERATORS MANUAL	$55.00	$0.00
0	0702462	EAGLE SERVICE MANUAL	$95.00	$0.00
0	0702242	EAGLE PARTS BOOK	$90.00	$0.00
0	0704072	CUMMINS OPERATORS & MAINTENANCE MANUAL	$135.00	$0.00
0	0704073	CUMMINS TROUBLESHOOTING MANUAL	$180.00	$0.00
		----LIFE LINER SYSTEM----		
0	1104503	LIFELINER HOPPER SYSTEM W/WARRANTY	$4,790.00	$0.00
0	1115546	LIFELINER HOPPER SYSTEM W/WARRANTY - LONG CHUTE	$5,735.00	$0.00
		---------LIGHTS----------		
0	1103553	PACKAGE 1 : SINGLE REAR/SINGLE HOPPER BEACON; LED WITH GUARD	$2,050.00	$0.00
0	1104619	PACKAGE 2 : DUAL REAR/SINGLE HOPPER BEACON; LED WITH GUARD	$2,080.00	$0.00
0	1125926	PACKAGE 3 : DUAL REAR/SINGLE HOPPER BEACON; LED WITH GUARD & LED ARROWSTICK	$4,385.00	$0.00
0	1104618	PACKAGE 4 : SINGLE REAR/SINGLE HOPPER MOUNT AND GUARD W/O BEACONS	$1,675.00	$0.00
0	1104619	PACKAGE 5 : DUAL REAR/SINGLE HOPPER MOUNT AND GUARD W/O BEACONS	$2,080.00	$0.00
0	1102735	LED STOP/TAIL/TURN/REAR ID/CLEARANCE LIGHTS	$370.00	$0.00
0	1125927	REAR MOUNTED LED ARROWSTICK	$1,815.00	$0.00
0	1102736	(2) REAR LOW MOUNTED OVAL AMBER LED FLASHERS	$445.00	$0.00
0	1103898	(2) REAR HIGH MOUNTED OVAL AMBER LED FLASHERS	$450.00	$0.00
0	1104481	ARROWBOARD - REAR	$2,155.00	$0.00
		----------PM10----------		
0	1116589	PM10 COMPLIANT (RULE 1186)	$3,260.00	$0.00
		----------SAFETY----------		
0	1101037	SLOW MOVING VEHICLE SIGN	$165.00	$0.00
0	1104991	REMOVE REAR CAMERA	$0.00	$0.00
0	9306848	TRIANGLE REFLECTIVE FLARES (3)	$95.00	$0.00
		-------SWEEP COMPONTENTS--		
0	1116574	CARBIDE DIRT SHOES (ILO RUBBER)	$905.00	$0.00
0	1116575	RUBBER MOUNTED CARBIDE DRAG SHOES TWO-ROW (ILO RUBBER)	$850.00	$0.00
0	1100656	SIDEBROOM TILT - RIGHT	$1,010.00	$0.00
0	1100660	SIDEBROOM TILT - LEFT	$1,010.00	$0.00
0	1117070	SIDEBROOM TILT - RIGHT W/INDICATOR	$1,080.00	$0.00
0	1117071	SIDEBROOM TILT - LEFT W/INDICATOR	$1,080.00	$0.00
0	1120662	SQUEEGEE CONVEYER (ILO CLEATED BELT)	$0.00	$0.00
		-------SWEEPER ENGINE-----		
0	1120322	AUXILIARY ENGINE BATTERY DISCONNECT SWITCH	$540.00	$0.00
0	6063004	EXTRA KEY	$50.00	$0.00
0	1102752	SY-KLONE AUX ENGINE PRECLEANER	$680.00	$0.00
0	1119563	BLOCK HEATER	$475.00	$0.00

MODEL: 4M EAGLE
EFFECTIVE DATE:01/01/2020
SUPERCEDES ALL PREVIOUS PRICE LISTS
DEALER PRICE LIST (U.S. DOLLARS)
REV #

QUANTITY	PART NUMBER	MODEL DESCRIPTION	2020 LIST PRICE	2020 EXTENDED
		-----TOOLS/TOOLBOXES------		
0	1036150	HYDRANT WRENCH	$100.00	$0.00
		----------WATER---------		
0	1032484	25' WATER FILL HOSE (ILO 16' 8")	$205.00	$0.00
0	1108830	AIR PURGE FOR WATER SYSTEM	$410.00	$0.00
		----------PAINT----------		
0	SPECIAL	SWEEPER PAINTED RAL 1023, 1037, 3020, 1018	540.00	$0.00
0	SPECIAL	SWEEPER PAINTED ANY OTHER RAL COLOR	1285.00	$0.00
0	SPECIAL	SWEEPER PAINTED NON RAL	3890.00	$0.00
		----- M2 CHASSIS OPTIONS -----		
0	1081188	EXTRA KEY	$55.00	$0.00
0	1081365	IN CAB AIR FILTER RESTRICTION INDICATOR	$890.00	$0.00
0	1081747	(2) BOSTROM AIR 905 CLOTH HI-BACK	$2,140.00	$0.00
0	1081748	(1) AIR CLOTH HI-BACK SEAT	$1,110.00	$0.00
0	1081909	SINGLE ARM REST - VINYL **(ONLY W/AIR RIDE SEATS)**	$390.00	$0.00
0	1081910	DUAL ARM REST - VINYL **(ONLY W/AIR RIDE SEATS)**	$730.00	$0.00
0	1081911	SINGLE ARM REST - CLOTH **(ONLY W/AIR RIDE SEATS)**	$390.00	$0.00
0	1081912	DUAL ARM REST - CLOTH **(ONLY W/AIR RIDE SEATS)**	$730.00	$0.00
0	1081956	DAYTIME RUNNING LIGHTS	$1,130.00	$0.00
0	1090653	DUAL AIR HORN	$1,665.00	$0.00
0	1101567	2 1/2 LB. FIRE EXTINGUISHER	$230.00	$0.00
0	1101568	5 LB. FIRE EXTINGUISHER	$260.00	$0.00
0	1109607	12" CONVEX MIRRORS (IL0 STD 8")	$340.00	$0.00
0	1103751	SINGLE CAB MOUNTED BEACON; LED WITH GUARD	$1,815.00	$0.00
0	1117611	FULL WIDTH FRONT SPRAY BAR	$1,090.00	$0.00
0	1120505	SPARE TIRE / WHEEL	$1,415.00	$0.00
		-----NAVISTAR CHASSIS OPTIONS-----		
0	4820001	CAB STANDARD WHITE	$0.00	$0.00
0	1063731	NAV CAB PAINTED SPECIAL COLOR	$3,865.00	$0.00
0	1086733	LEFT HAND FENDER MOUNTED MIRROR	$540.00	$0.00
0	1091761	EXTRA KEY	$70.00	$0.00
0	1091770	(2) ELECTRIC & (1) AIR HORN	$1,990.00	$0.00
0	1097641	NATIONAL AIR RIDE SEAT - PASSENGER SIDE - VINYL	$2,475.00	$0.00
0	1097643	NATIONAL AIR RIDE SEAT-PASSENGER SIDE - CLOTH	$2,340.00	$0.00
0	1097644	NATIONAL AIR RIDE SEAT-PASSENGER SIDE- CLOTH W/ARM REST	$2,490.00	$0.00
0	1097645	NATIONAL AIR RIDE SEAT - DRIVER SIDE - VINYL	$2,200.00	$0.00
0	1097647	NATIONAL AIR RIDE SEAT - DRIVER SIDE - CLOTH	$2,340.00	$0.00
0	1097648	NATIONAL AIR RIDE SEAT - DRIVER SIDE - CLOTH W/ARM REST	$2,685.00	$0.00
0	1099317	(1) ELECTRIC HORN	$415.00	$0.00
0	1091822	AM/FM/CD RADIO	$950.00	$0.00
0	1101567	2 1/2 LB. FIRE EXTINGUISHER	$230.00	$0.00
0	1101568	5 LB. FIRE EXTINGUISHER	$260.00	$0.00
0	1117611	FULL WIDTH FRONT SPRAY BAR	$1,090.00	$0.00

MODEL: 4M EAGLE
EFFECTIVE DATE:01/01/2020
SUPERCEDES ALL PREVIOUS PRICE LISTS
DEALER PRICE LIST (U.S. DOLLARS)
REV #

QUANTITY	PART NUMBER	MODEL DESCRIPTION	2020 LIST PRICE	2020 EXTENDED
		---------WARRANTY---------		
0	EW-ME-NA-2PL	EAGLE 2ND YEAR PARTS/LABOR	$2,884.00	$0.00
0	EW-ME-NA-3PL	EAGLE 3RD YEAR PARTS/LABOR	$5,445.00	$0.00
0	EW-ME-NA-4PL	EAGLE 4TH YEAR PARTS/LABOR	$7,765.00	$0.00
0	EW-ME-NA-5PL	EAGLE 5TH YEAR PARTS/LABOR	$9,871.00	$0.00
		------FREIGHT RATES------		
0	FRT-111-001	SELF SHIPPING DOCK CHARGE	$595.00	$0.00
0	FRT-111-002	FREIGHT-IL,WI,IA,IN,MI,MN,KY	$1,310.00	$0.00
0	FRT-111-003	FREIGHT-TN,WV,PA,NY	$2,850.00	$0.00
0	FRT-111-004	FREIGHT-NH,VT,ME	$3,595.00	$0.00
0	FRT-111-005	FREIGHT-NEW YORK CITY	$4,110.00	$0.00
0	FRT-111-006	FREIGHT-ND,SD,NE,OK,KS,AR,AL,MO	$2,715.00	$0.00
0	FRT-111-007	FREIGHT-AZ,UT	$5,445.00	$0.00
0	FRT-111-008	FREIGHT-CA,NV,ID,OR,WA	$6,355.00	$0.00
0	FRT-111-009	FREIGHT- CHICAGO/MILWAUKEE	$900.00	$0.00
0	FRT-111-010	FREIGHT-FL,LA,TX,NM,CO,WY,MT	$4,145.00	$0.00
0	FRT-111-011	FREIGHT-OH,ST.LOUIS METRO	$1,530.00	$0.00
0	FRT-111-012	FREIGHT,MS,GA,SC,NC,VA,MD	$3,130.00	$0.00
0	FRT-111-013	FREIGHT - RI,DE,CT,NJ,MA	$2,740.00	$0.00
0	FRT-111-014	FREIGHT - LAREDO, TX	$6,700.00	$0.00
0	FRT-111-015	SPECIALIZED TRANSPORT EQUIPMENT	$1,030.00	$0.00
			SUB TOTAL	**$0.00**
		-----DISCOUNTS-----		
0	DISC-111-ADDL	ADDITIONAL DISCOUNT	$0.00	$0.00
0	DISC-111-PROMO	PROMO DISCOUNT	$0.00	$0.00
		SPECIAL RFQ OPTIONS / OTHER DESCRIPTIONS		
			GRAND TOTAL	**$0.00**

MODEL: WATERLESS EAGLE (TIER 4F)
EFFECTIVE DATE: 01/01/2020
SUPERCEDES ALL PREVIOUS PRICE LISTS
DEALER PRICE LIST (U.S. DOLLARS)

Purchase Order #	**Ship To Address:**
Order Date:	
Delivery Date Requirment If Any:	**State Penalty Clause If Applicable:**

QUANTITY	PART NUMBER	MODEL DESCRIPTION	2020 LIST PRICE	2020 EXTENDED
0	1123960	**WATERLESS EAGLE - DUAL - TIER 4F 74hp AUX FOR M2**	$226,695	$0.00
0	1123107	**WATERLESS EAGLE - DUAL - TIER 4F 74hp AUX FOR PETERBILT**	$226,695	$0.00
0		Tier 4F engine, hydraulically driven left and right side brooms and variable height, right side dumping, 4.5 cu. yd. hopper, sweeper is powder coated from powder coatings chart 2003/N with powder coated gray undercarriage and includes the standard features listed below.		

CHASSIS

0	SPECIAL	M2 DUAL STEER	CONTACT INSIDE SALES	$0.00
0	SPECIAL	PETERBILT DUAL STEER	CONTACT INSIDE SALES	$0.00
0	1107354	CANADIAN COMPLIANCE AND DAYTIME RUNNING LIGHTS FOR AUTOCAR CHASSIS	$780	$0.00

CHASSIS MOUNTING CHARGE

0	SPECIAL	M2 DUAL STEER - CHASSIS ALTERATIONS	$2,680	$0.00
0	SPECIAL	CUSTOMER SUPPLIED CHASSIS ALTERATIONS	CONTACT INSIDE SALES	$0.00
0		CUSTOMER SUPPLIED HANDLING CHARGE	$2,680	$0.00

NOTE: Customer Supplied Cassis Requires Both The Chassis Alterations and the Handling Charge

1	4820001	PAINT CAB STANDARD WHITE	N/C	$0.00
1	4810001	PAINT SWEEPER STANDARD WHITE	N/C	$0.00

NOTE: A BODY includes the cost of Elgin standard white finish paint. It does not however, include the pric
NOTE: The chassis being supplied by a customer or dealer **must** comply completely with all Elgin require
NOTE: For cost of sweeper mounted on any other chassis, consult factory.
NOTE: One year warranty on all Elgin supplied parts and labor. Consult your Elgin dealer for full warranty

STANDARD FEATURES

Air conditioning
Air cleaner, dry type with safety element and restriction indicator:
  truck & sweeper engines
Alternator, 120 amp, sweeper
Alternator, truck 130 amp, (UD) 160 amp (autocar)
Auxiliary engine:
  John Deere 4045TF290, in-line 4 cylinder
  Horsepower: 74 HP (55 kW) at 2400 RPM
  Displacement: 276 cu. in. (4.5 L)
Axle, rear, two-speed
Back-up alarm, electric
Battery, maintenance free, two
Brakes, full air
Broom, main air suspension, cab-controlled
Broom, main, down pressure gauge
Broom, main, double wrap
Camera, Rear with in-cab monitor
Conveyor, flushing system
Conveyor, lower roller washout
Dust Skirts
Engine, block heater, chassis
Engine, hour meter, sweeper
Fresh air ventilator/heater/defroster
Fuel tank, 50 gallon
Fugitive dust control filter with in-cab cleaning
Fugitive dust control fan
Hopper inspection door
Hose, hydrant fill, 16'8" (5080 mm) with strainer and coupling
Lights, automatic backup
Lights, 2 combination, tail/stop lights
Lights, flood light, one per broom
Lights, headlights, 2 dual rectangular
Light, water level
Manuals, operator and parts
Mirrors, West Coast type with 8" diameter convex, both sides
PM-10 compliant water system
Signals, self-canceling directional with hazard switch
Sun visors
Tachometer, engine, truck and sweeper
Rocker switch controls for all sweep hydraulic functions
Transmission, Allison, standard with oil cooler
Water spray, anti-siphon fill
Water tank, molded polyethylene, 315 gallon total nominal capacity
Wheels, dual rear with tubeless radial tires
Windshield washer
Windshield wipers, two-speed, intermittent feature

MODEL: WATERLESS EAGLE (TIER 4F)
EFFECTIVE DATE: 01/01/2020
SUPERCEDES ALL PREVIOUS PRICE LISTS
DEALER PRICE LIST (U.S. DOLLARS)

QUANTITY	PART NUMBER	MODEL DESCRIPTION	2020 LIST PRICE	2020 EXTENDED
		----------ALARMS---------		
0	1035625	CONVEYOR STALL ALARM	$750.00	$0.00
0	1121056	ECCO SMART ALARM	$270.00	$0.00
0	1122745	BACK UP ALARM - PRECO	$290.00	$0.00
0	1115188	MAIN BROOM HOUR INDICATOR	$425.00	$0.00
		----------AUX ENGINE------		
0	1123582	BATTERY DISCONNECT SWITCH AUXILIARY ENGINE	$540.00	$0.00
		---------AUTO LUBE--------		
0	1080479	MIDWEST AUTOLUBE - SWEEPER ONLY	$7,475.00	$0.00
		---------BROOMS----------		
0	1084918	CARBIDE DIRT SHOES	$880.00	$0.00
		---------DECALS----------		
0	1048642	SLOW MOVING VEHICLE SIGN	$170.00	$0.00
0	1078556	RED LOGO/SWOOSH - EAGLE WATERLESS	N/C	$0.00
0	1078557	WHITE LOGO/SWOOSH - EAGLE WATERLESS	N/C	$0.00
0	1122929	SHIP DECALS AND SWOOSH LOOSE IN HOPPER	N/C	$0.00
		----------LIGHTS----------		
0	1055272	STROBE LIGHT	$385.00	$0.00
0	1070369	(2) REAR 7" ALTERNATING FLASHERS	$755.00	$0.00
0	1070639	LED/STOP/TAIL/REAR TURN LIGHT M2/IH	$665.00	$0.00
		------LIFELINER----------		
0	1085062	LIFELINER HOPPER SYSTEM W/WARRANTY	$4,790.00	$0.00
0	1122304	LIFELINER HOPPER - EXTENDED DOOR	$5,790.00	$0.00
		----------PAINT----------		
0	4811018	PAINT SWEEPER ZINC YELLOW RAL 1018	$525.00	$0.00
0	4811023	PAINT SWEEPER TRAFFIC YELLOW RAL 1023	$525.00	$0.00
0	4811037	PAINT SWEEPER SUN YELLOW RAL 1037	$525.00	$0.00
0	4813020	PAINT SWEEPER TRAFFIC RED RAL 3020	$525.00	$0.00
0	SPECIAL	PAINT SWEEPER ANY OTHER RAL COLOR	$1,285.00	$0.00
0	SPECIAL	PAINT SWEEPER NON RAL COLOR	$3,890.00	$0.00
		---------SAFETY----------		
0	9306848	TRIANGLE REFLECTIVE FLARES (3)	$95.00	$0.00
0	1035641	REFLECTORS, SET OF 6	$145.00	$0.00
0	1094513	REMOVE REAR CAMERA	N/C	$0.00
		-----MANUALS----		
0	702224	EAGLE WATERLESS PARTS BOOK	$90.00	$0.00
0	701485	EAGLE WATERLESS OPERATORS MANUAL	$55.00	$0.00
0	702125	EAGLE WATERLESS SERVICE MANUAL	$95.00	$0.00

MODEL: WATERLESS EAGLE (TIER 4F)
EFFECTIVE DATE: 01/01/2020
SUPERCEDES ALL PREVIOUS PRICE LISTS
DEALER PRICE LIST (U.S. DOLLARS)

QUANTITY	PART NUMBER	MODEL DESCRIPTION	2020 LIST PRICE	2020 EXTENDED
		-----SWEEP COMPONENTS-----		
0	1042725	HYDRAULIC TANK MAGNET	$215.00	$0.00
0	1044103	HEAVY DUTY LOWER CONVEYOR ROLLER	$1,070.00	$0.00
0	1061886	HYDRAULIC OIL LEVEL GAUGE W/THERMOMETER	$195.00	$0.00
0	1081694	RETURN SWEEP AFTER TRANSPORT	$1,445.00	$0.00
0	1086158	EXTENDED HOPPER DOOR	$1,005.00	$0.00
0	1087300	FAN SOUND DEFLECTOR	$930.00	$0.00
		--------TOOLS----------		
0	1053426	TOOL KIT	$790.00	$0.00
0	1057687	TOOL BOX W/TOOLS	$765.00	$0.00
0	1036150	HYDRANT WRENCH	$100.00	$0.00
		---------WATER----------		
0	1032484	25' WATER FILL HOSE (ILO 16' 8")	$205.00	$0.00
0	1081950	WATER FILL GAUGE	$645.00	$0.00
		--------WARRANTY----------		
0	EW-MEWL-NA-2PL	WATERLESS EAGLE 2ND YEAR PARTS/LABOR	$3,106.00	$0.00
0	EW-MEWL-NA-3PL	WATERLESS EAGLE 3RD YEAR PARTS/LABOR	$5,958.00	$0.00
0	EW-MEWL-NA-4PL	WATERLESS EAGLE 4TH YEAR PARTS/LABOR	$8,450.00	$0.00
0	EW-MEWL-NA-5PL	WATERLESS EAGLE 5TH YEAR PARTS/LABOR	$10,560.00	$0.00
		------FREIGHT RATES------		
0	FRT-113-001	SELF SHIPPING DOCK CHARGE	$595.00	$0.00
0	FRT-113-002	FREIGHT-IL,WI,IA,IN,MI,MN,KY	$1,310.00	$0.00
0	FRT-113-003	FREIGHT-TN,WV,PA,NY	$2,850.00	$0.00
0	FRT-113-004	FREIGHT-NH,VT,ME	$3,595.00	$0.00
0	FRT-113-005	FREIGHT-NEW YORK CITY	$4,110.00	$0.00
0	FRT-113-006	FREIGHT-ND,SD,NE,OK,KS,AR,AL,MO	$2,715.00	$0.00
0	FRT-113-007	FREIGHT-AZ,UT	$5,445.00	$0.00
0	FRT-113-008	FREIGHT-CA,NV,ID,OR,WA	$6,355.00	$0.00
0	FRT-113-009	FREIGHT- CHICAGO/MILWAUKEE	$900.00	$0.00
0	FRT-113-010	FREIGHT-FL,LA,TX,NM,CO,WY,MT	$4,145.00	$0.00
0	FRT-113-011	FREIGHT-OH,ST.LOUIS METRO	$1,530.00	$0.00
0	FRT-113-012	FREIGHT - MS,GA,SC,NC,VA,MD	$3,130.00	$0.00
0	FRT-113-013	FREIGHT- RI,DE,CT,NJ,MA	$2,740.00	$0.00
0	FRT-113-014	FREIGHT- LAREDO, TX	$6,700.00	$0.00
0	FRT-113-015	SPECIALIZED TRANSPORT EQUIPMENT	$1,030.00	$0.00
			SUB TOTAL	**$0.00**
		-----DISCOUNTS-----		
0	DISC-113-ADDL	ADDITIONAL DISCOUNT	$0.00	$0.00

SPECIAL RFQ OPTIONS / OTHER DESCRIPTIONS

GRAND TOTAL	**$0.00**

MODEL: ECOINFUSED PELICAN NP 55KW
EFFECTIVE DATE: 01/01/2020
SUPERCEDES ALL PREVIOUS PRICE LISTS
DEALER PRICE LIST (U.S. DOLLARS)
REV #

Purchase Order #	**Ship To Address:**
Order Date:	
Delivery Date Requirment If Any:	**State Penalty Clause If Applicable:**

QUANTITY	PART NUMBER	MODEL DESCRIPTION	2020 LIST PRICE	2020 EXTENDED
0	1120933	**PELICAN P SINGLE, TIER 4F, 55KW, USA AND CANADA**	$198,000	$0.00
		Single steer & gutter broom, right side hydraulically driven, Tier 4F JD 4045TF low emission diesel engine, hydrostatic drive and steering, chassis and wheels powder coated standard white and including the standard features below.		
0	1120847	**PELICAN P DUAL, TIER 4F, 55KW, USA AND CANADA**	$209,375	$0.00
		Dual steer & gutter brooms, hydraulically driven, Tier 4F JD 4045TF low emission diesel engine, hydrostatic drive and steering, chassis and wheels powder coated standard white and including the standard features below.		

NOTE: One year warranty on all Elgin supplied parts and labor. Consult your Elgin dealer for fu

STANDARD FEATURES

1	0701443	PELICAN P OPERATORS MANUAL	STANDARD	$0.00
1	0702261	PELICAN P PARTS BOOK	STANDARD	$0.00
1	0704046	JOHN DEERE OPERATORS MANUAL	STANDARD	$0.00
1	0704047	JOHN DEERE PARTS BOOK	STANDARD	$0.00
1	0730166	BROOM MEASUREMENT RULER	STANDARD	$0.00
1	0701708	MACHINE DELIVERY PACKET	STANDARD	$0.00
1	0702020	ELGIN SAFETY MANUAL	STANDARD	$0.00

Air cleaner, two-stage, dry type with restriction indicator
Air conditioner
Alternator, 120 amp
Anti siphon water fill
Automatic engine shutdown (oil pressure/engine temperature)
Automatic pickup in reverse
B20 biodiesel compatible
Back up alarm, electric
Battery, maintenance free
Brakes, power
Broom, main, hydraulically suspended
Broom, main, in cab pressure control
Broom, main, prefab, disposable
Broom, side broom, hydraulically suspended
Broom, side broom, in cab pressure control
Bumper pads, front jack
Coolant recovery system
Doors, see through glass, prop-able
Electronic Throttle
Engine, hour meter
Gauges & Warning lights:
  engine coolent temperature
  engine oil pressure
  fuel level
  speedometer & odometer w/trip set
Fenders, over front wheels
Flushing system for hopper/conveyor
Fuel tank, 35 gallons
Fuel Water separator with indicator light
Heater, pressurizer with filtered air, defroster
Hose, hydrant fill, 16' 8" with coupling
Light, spotlight, adjustable, one per side broom
Lights, 2 combination, tail/stop lights
Lights, headlights, multiple beam
Lights, low water light
Low Hydraulic Warning
Main broom controls in cab
Manuals, operator and parts
Mirror, inside rear view
Mirrors, outside, front mounted 6" fish eyes
Mirrors, outside, front post mounted, west coast type, one each side
Parking brake with interlock
Rear Camera & in cab monitor
Return to sweep feature
Seat Belts (both sides for dual)
Seats, extra wide cordura suspension seats with arm rests
Signals, self-canceling directional with hazard switch
Sprung guide wheel, heavy duty
Steering wheel, tilt and telescoping
Sun visors
Tachometer, diesel engine
Tires, tubeless radials
Tow loops, four
Water tank, fill gauge
Water tank, molded polyethylene: 220 gallon total nominal capacity
Wheels, dual guide
Wheels painted grey
Window, opening front opera
Windshield washer
Windshield wipers with intermittent setting
Windshield, tinted

MODEL: ECOINFUSED PELICAN NP 55KW
EFFECTIVE DATE: 01/01/2020
SUPERCEDES ALL PREVIOUS PRICE LISTS
DEALER PRICE LIST (U.S. DOLLARS)
REV #

QUANTITY	PART NUMBER	MODEL DESCRIPTION	2020 LIST PRICE	2020 EXTENDED
		-----ADDITIONAL MANUALS----		
0	701443	PELICAN OPERATORS MANUAL	$55.00	$0.00
0	702261	PELICAN PARTS BOOK	$90.00	$0.00
0	702453	PELICAN SERVICE	$95.00	$0.00
0	704046	JOHN DEERE OPERATORS MANUAL	$55.00	$0.00
0	704047	JOHN DEERE PARTS BOOK	$110.00	$0.00
0	704048	JOHN DEERE SERVICE	$190.00	$0.00
		----------ALARMS----------		
0	1089728	GROTE LOUD MOUTH BACKUP ALARM	$295.00	$0.00
		------AUTOLUBE----------		
0	1087667	MIDWEST AUTOLUBE - SINGLE	$5,790.00	$0.00
0	1087668	MIDWEST AUTOLUBE - DUAL	$6,505.00	$0.00
0	1089040	VOGEL AUTOLUBE - SINGLE	$7,295.00	$0.00
0	1089041	VOGEL AUTOLUBE - DUAL	$7,750.00	$0.00
0	1107312	VOGEL AUTOLUBE - DUAL (USE W/GREASABLE DIRT SHOES)	$9,560.00	$0.00
0	1103124	MIDWEST AUTOLUBE - DUAL (USE W/GREASABLE DIRT SHOES)	$7,475.00	$0.00
0	1108963	MIDWEST AUTOLUBE - SINGLE (USE W/GREASABLE DIRT SHOES)	$6,825.00	$0.00
		------AUTO SHUTDOWN-------		
0	1087563	HYDRAULIC LEVEL SHUTDOWN	$190.00	$0.00
0	1089429	HYDRAULIC LEVEL & TEMPERATURE SHUTDOWN	$370.00	$0.00
0	1120654	HYDRAULIC TEMPERATURE SHUTDOWN	$190.00	$0.00
		---------BROOMS----------		
0	1015558	EXTRA SET SIDE BROOM SEGMENT, FILLED	$260.00	$0.00
0	1087976	STRIP BROOM 66" URB	$935.00	$0.00
0	1088008	MAIN BROOM CORE ONLY	-$83.20	$0.00
0	1088800	50/50 POLY/WIRE MAINBROOM	$935.00	$0.00
0	1089518	DEDUCT MAIN BROOM & CORE	-$236.80	$0.00
0	1091361	URB STRIP BROOM - CENTER SWEEP	$935.00	$0.00
0	1094877	ALUMINUM SIDE BROOM SEGMENT PER SIDE	$670.00	$0.00
0	1094878	POLY/POLY SIDE BROOM SET	$140.00	$0.00
0	1095342	DEDUCT SIDE BROOM SEGMENT (PER SIDE)	-$120.00	$0.00
		----CONVEYOR/ELEVATOR-----		
0	1124786	CONVEYOR STALL ALARM	$750.00	$0.00
0	1087575	LOWER ROLLER DEFLECTOR	$520.00	$0.00
0	1120820	CONVEYOR CLEANOUT	$520.00	$0.00
		----------GAUGES----------		
0	1088858	LOOSE CHARGE PRESSURE GAUGE	$320.00	$0.00
0	1120827	IN CAB AIR RESTRICTION GAUGE	$390.00	$0.00
		-----LIFELINER SYSTEM / EPOXY COATING-----		
0	1092236	LIFELINER HOPPER SYSTEM W/WARRANTY	$4,135.00	$0.00

MODEL: ECOINFUSED PELICAN NP 55KW
EFFECTIVE DATE: 01/01/2020
SUPERCEDES ALL PREVIOUS PRICE LISTS
DEALER PRICE LIST (U.S. DOLLARS)
REV #

QUANTITY	PART NUMBER	MODEL DESCRIPTION	2020 LIST PRICE	2020 EXTENDED
		---------LIGHTS----------		
0	1087873	LED CLEARANCE LIGHTS	$290.00	$0.00
0	1120770	LED ALTERNATING & FLASHING LIGHTS IN BATTERY COVER	$1,210.00	$0.00
0	1120744	(2) LED REAR FLOODS & BACKUP LIGHTS	$800.00	$0.00
0	1114404	(2) CAB FORWARD FACING LED FLOOD LIGHTS WITH LIGHT BAR	$1,150.00	$0.00
0	1114405	(2) CAB FORWARD FACING LED FLOOD LIGHTS WITHOUT LIGHT BAR	$1,480.00	$0.00
0	1101273	LED STOP/TAIL/TURN	$370.00	$0.00
0	1101318	PACKAGE 5: ONE LED STROBE W/ GUARD	$995.00	$0.00
0	1101319	PACKAGE 6: TWO LED STROBES W/ GUARD	$1,745.00	$0.00
0	1101320	PACKAGE 7: PACKAGE 6 + FOUR ROOF MOUNTED SWEEP FLASHERS **LED STOP/TAIL/TURN MUST BE ORDERED WITH THIS PACKAGE**	$2,330.00	$0.00
0	1101322	PACKAGE 9: REAR LIGHT MOUNTING RAIL ONLY	$690.00	$0.00
0	1101323	PACKAGE 10: FRONT LIGHT MOUNTING RAIL ONLY	$690.00	$0.00
0	1101324	PACKAGE 11: REAR LIGHT MOUNTING RAIL AND WIRE/MOUNT/GUARD FOR 1 LIGHT	$765.00	$0.00
0	1101325	PACKAGE 12: REAR LIGHT MOUNTING RAIL AND WIRE/MOUNT/GUARD FOR 2 LIGHTS	$1,270.00	$0.00
0	1125795	PACKAGE 13: LED ARROWSTICK (ONLY)	$1,360.00	$0.00
0	1125796	PACKAGE 14: LED ARROWSTICK (USE WITH PACKAGE'S 1, 2, 3, 5, 6, 7)	$1,360.00	$0.00

MODEL: ECOINFUSED PELICAN NP 55KW
EFFECTIVE DATE: 01/01/2020
SUPERCEDES ALL PREVIOUS PRICE LISTS
DEALER PRICE LIST (U.S. DOLLARS)
REV #

QUANTITY	PART NUMBER	MODEL DESCRIPTION	2020 LIST PRICE	2020 EXTENDED
		------PELICAN OPTIONS-----		
0	1042010	WATER FILL HOSE QUICK DISCONNECT	$540.00	$0.00
0	1125550	LICENSE PLATE HOLDER - FRONT & REAR	$240.00	$0.00
0	1087541	LOCKING ENGINE COMPARTMENT	$235.00	$0.00
0	1087605	CARBIDE DIRT SHOES	$1,140.00	$0.00
1	1087981	RED LOGO/SWOOSH	$0.00	$0.00
0	1087982	WHITE LOGO/SWOOSH	$0.00	$0.00
0	1122929	SHIP DECALS AND SWOOSH LOOSE IN HOPPER	$0.00	$0.00
0	1087995	25' WATER FILL HOSE (ILO 16' 8")	$205.00	$0.00
0	1097387	GREASABLE DIRT SHOES	$105.00	$0.00
0	1123319	SLIDING REAR WINDOW	$930.00	$0.00
0	1123322	STEEL RIGHT HAND DOOR W/ SLIDING WINDOW	$3,090.00	$0.00
0	1123320	STEEL RIGHT & LEFT HAND DOOR W/ SLIDING WINDOW	$4,720.00	$0.00
0	1123323	STEEL RIGHT HAND DOOR	$1,905.00	$0.00
0	1123321	STEEL RIGHT & LEFT HAND DOOR	$3,800.00	$0.00
0	1100256	RADIO INSTALL PACKAGE W/O RADIO	$400.00	$0.00
0	1101017	LEFT HAND AND RIGHT HAND "WEST COAST" STYLE MIRRORS HEATED & MOTORIZED. (DOES NOT HEAT OR MOTORIZE HOPPER CONVEX MIRRORS)	$1,305.00	$0.00
0	1124183	HEAVY DUTY DUAL LIMB GUARDS	$2,340.00	$0.00
0	1124182	HEAVY DUTY LIMB GUARD LEFTHAND ONLY	$1,295.00	$0.00
0	1124181	HEAVY DUTY LIMB GUARD RIGHT HAND ONLY	$1,295.00	$0.00
0	1101244	AM/FM RADIO WITH CD & 2 MAP LIGHTS	$610.00	$0.00
0	1106698	GREASABLE CARBIDE DIRT SHOES	$1,380.00	$0.00
0	6063004	ADDITIONAL IGNITION KEY	$50.00	$0.00
0	1120655	25' WASHDOWN SYSTEM	$990.00	$0.00
		-------REFLECTORS---------		
0	1087538	REFLECTOR (ARMOURED) , SET OF 6	$165.00	$0.00
		------SIDE BROOM TILT-----		
0	1089502	LEFT HAND SIDEBROOM TILT WITH INDICATOR	$1,975.00	$0.00
0	1089503	RIGHT HAND SIDEBROOM TILT WITH INDICATOR	$1,975.00	$0.00
		----------SEATS----------		
0	1087555	RIGHT HAND BOSTROM AIR RIDE MID BACK CLOTH	$1,030.00	$0.00
0	1087556	LEFT HAND BOSTROM AIR RIDE MID BACK CLOTH	$1,030.00	$0.00
0	1087677	ALL VINYL STD SEAT	$40.00	$0.00
0	1088301	RIGHT HAND BOSTROM AIR RIDE HI BACK CLOTH	$1,030.00	$0.00
0	1088302	LEFT HAND BOSTROM AIR RIDE HI BACK CLOTH	$1,030.00	$0.00
0	1089316	RIGHT HAND BOSTROM AIR RIDE MID BACK -VINYL	$1,030.00	$0.00
0	1089317	LEFT HAND BOSTROM AIR RIDE MID BACK - VINYL	$1,030.00	$0.00
0	1089510	LEFT HAND MAGNUM STANDARD SEAT	$905.00	$0.00
0	1093157	HEADREST FOR MAGNUM STD SEAT	$425.00	$0.00
		---------SAFETY----------		
0	1087559	(1) 2 1/2 LB. FIRE EXTINGUISHER	$230.00	$0.00
0	1088661	(2) 2 1/2 LB. FIRE EXTINGUISHER	$455.00	$0.00
0	1092020	REMOVE REAR CAMERA	$0.00	$0.00
0	1101067	LEFT HAND SIDE CAMERA	$565.00	$0.00
0	1122587	RIGHT HAND SIDE CAMERA	$565.00	$0.00
0	9306848	TRIANGLE REFLECTIVE FLARES (3)	$95.00	$0.00
		-----SWEEPER ENGINE-------		
0	1120838	PREMIUM RADIATOR/HEATER HOSES	$300.00	$0.00
0	1127329	COLD WEATHER START AIDE	$585.00	$0.00
0	1087562	ENGINE PRE-CLEANER	$450.00	$0.00
0	1087675	BATTERY DISCONNECT SWITCH	$200.00	$0.00
0	1089774	MAGNETIC DRAIN PLUG	$175.00	$0.00
0	1120874	ENGINE COOLANT FILTER	$535.00	$0.00

MODEL: ECOINFUSED PELICAN NP 55KW
EFFECTIVE DATE: 01/01/2020
SUPERCEDES ALL PREVIOUS PRICE LISTS
DEALER PRICE LIST (U.S. DOLLARS)
REV #

QUANTITY	PART NUMBER	MODEL DESCRIPTION	2020 LIST PRICE	2020 EXTENDED
		------TIRES/WHEELS--------		
0	1101068	SPARE DRIVE WHEEL PAINTED GREY	$685.00	$0.00
0	1101069	SPARE GUIDE WHEEL PAINTED GREY	$625.00	$0.00
0	1101669	SPARE DRIVE WHEEL PAINTED GREY & TIRE (16 PLY)	$1,235.00	$0.00
0	1120585	SPARE GUIDE WHEEL PAINTED GREY & TIRE (16 PLY)	$995.00	$0.00
		----------TOOLS----------		
0	1036150	HYDRANT WRENCH	$100.00	$0.00
0	1049145	LUG WRENCH	$405.00	$0.00
0	1089549	RIGHT HAND LOCKABLE TOOLBOX W/HOSE BASKET W/O WASHDOWN SYSTEM	$1,090.00	$0.00
0	1121064	LEFT HAND LOCKABLE TOOL BOX	$1,090.00	$0.00
0	1090342	TOOL KIT (NO TOOL BOX)	$660.00	$0.00
0	1090584	MECHANICAL JACK RATCHET	$1,525.00	$0.00
		----------PAINT----------		
1	4810001	STANDARD WHITE	$0.00	$0.00
0	4811018	RAL 1018 ZINC YELLOW	$525.00	$0.00
0	4811023	RAL 1023 TRAFFIC YELLOW	$525.00	$0.00
0	4811037	RAL 1037 SUN YELLOW	$525.00	$0.00
0	4813020	RAL 3020 TRAFFIC RED	$525.00	$0.00
0	SPECIAL	PAINT SWEEPER ANY OTHER RAL COLOR	1285.00	$0.00
0	SPECIAL	WHEELS PAINTED SAME COLOR AS BODY	650.00	$0.00
0	SPECIAL	PAINT SWEEPER NON RAL COLOR	3890.00	$0.00
0	1118326	CUSTOM COLOR BODY PANELS	$0.00	$0.00
		-------FREIGHT RATES-------		
0	FRT-101-001	SELF SHIPPING DOCK CHARGE	$595.00	$0.00
0	FRT-101-002	FREIGHT-IL,WI,IA,IN,MI,MN,KY	$1,310.00	$0.00
0	FRT-101-003	FREIGHT-TN,WV,PA,NY	$2,850.00	$0.00
0	FRT-101-004	FREIGHT-NH,VT,ME	$3,555.00	$0.00
0	FRT-101-005	FREIGHT-NEW YORK CITY	$4,110.00	$0.00
0	FRT-101-006	FREIGHT-ND,SD,NE,OK,KS,AR,AL,MO	$2,715.00	$0.00
0	FRT-101-007	FREIGHT-AZ,UT	$5,390.00	$0.00
0	FRT-101-008	FREIGHT-CA,NV,ID,OR,WA	$6,355.00	$0.00
0	FRT-101-009	FREIGHT- CHICAGO/MILWAUKEE	$900.00	$0.00
0	FRT-101-010	FREIGHT-FL,LA,TX,NM,CO,WY,MT	$4,145.00	$0.00
0	FRT-101-011	FREIGHT-OH,ST.LOUIS METRO	$1,530.00	$0.00
0	FRT-101-012	FREIGHT,MS,GA,SC,NC,VA,MD	$3,130.00	$0.00
0	FRT-101-013	FREIGHT - RI,DE,CT,NJ,MA	$2,795.00	$0.00
0	FRT-101-014	FREIGHT - LAREDO, TX	$6,700.00	$0.00
0	FRT-101-015	SPECIALIZED TRANSPORT EQUIPMENT	$1,030.00	$0.00
		--------WARRANTY----------		
0	EW-NP-NA-2PL	PELICAN NP 2ND YEAR PARTS/LABOR	$3,421.00	$0.00
0	EW-NP-NA-3PL	PELICAN NP 3RD YEAR PARTS/LABOR	$5,024.00	$0.00
0	EW-NP-NA-4PL	PELCIAN NP 4TH YEAR PARTS/LABOR	$8,232.00	$0.00
0	EW-NP-NA-5PL	PELICAN NP 5TH YEAR PARTS/LABOR	$11,815.00	$0.00
			SUB TOTAL	**$0.00**
		-----DISCOUNTS-----		
0	DISC-101-ADDL	ADDITIONAL DISCOUNT	$0.00	$0.00
0	DISC-101-PROMO	PROMO DISCOUNT	$0.00	$0.00
		SPECIAL RFQ OPTIONS / OTHER DESCRIPTIONS		
			GRAND TOTAL	**$0.00**

MODEL: ROAD WIZARD
EFFECTIVE DATE: 01/01/2020
SUPERCEDES ALL PREVIOUS PRICE LISTS
DEALER PRICE LIST (U.S. DOLLARS)
REV:

Purchase Order #	**Ship To Address:**
Order Date:	
Delivery Date Requirment If Any:	**State Penalty Clause If Applicable:**

QUANTITY	PART NUMBER	MODEL DESCRIPTION	2020 LIST PRICE	2020 EXTENDED
0	1119865	**ROAD WIZARD - DUAL (M2)**	$187,555	$0.00
		Conveyor squeegee, dual, hydraulically driven side brooms, variable height, right side dumping hopper. sweeper is powder coated from powder coatings chart 2003/N with powder coated gray undercarriage and includes the standard features listed below.		
0	1120036	**ROAD WIZARD - DUAL (IH)**	$187,555	$0.00
		Conveyor squeegee, dual, hydraulically driven side brooms, variable height, right side dumping hopper. sweeper is powder coated from powder coatings chart 2003/N with powder coated gray undercarriage and includes the standard features listed below.		
0	SPECIAL	**ROAD WIZARD - DUAL (PETERBILT)**	$187,555	$0.00
		Conveyor squeegee, dual, hydraulically driven side brooms, variable height, right side dumping hopper. sweeper is powder coated from powder coatings chart 2003/N with powder coated gray undercarriage and includes the standard features listed below.		

CHASSIS

0	1124564	M2 DUAL STEER (2013 EMISSIONS) (NON STOCKED CHASSIS)	CONTACT INSIDE SALES	$0.00
0	1124667	AUTOCAR DUAL STEER LIMITED QTY	CONTACT INSIDE SALES	$0.00
0	1124549	PETERBILT RIGHT HAND STEER (NON STOCKED CHASSIS) SINGLE SPEED REAR AXLE	CONTACT INSIDE SALES	$0.00
0	1124550	PETERBILT DUAL STEER (NON STOCKED CHASSIS) SINGLE SPEED REAR AXLE	CONTACT INSIDE SALES	$0.00
0	1124545	IH DUAL STEER (NON STOCKED CHASSIS)	CONTACT INSIDE SALES	$0.00

CHASSIS MOUNTING CHARGE

0	1119864	M2 - CHASSIS ALTERATIONS	$2,680	$0.00
0	1120180	INTERNATIONAL - CHASSIS ALTERATIONS	$2,680	$0.00
0	1120762	PETERBILT - CHASSIS ALTERATIONS	$2,680	$0.00
0	SPECIAL	CUSTOMER SUPPLIED CHASSIS ALTERATIONS	CONTACT INSIDE SALES	$0.00
0		CUSTOMER SUPPLIED HANDLING CHARGE	$3,690	$0.00

NOTE: Customer Supplied Cassis Requires Both The Chassis Alterations and the Handling Charge

NOTE: A BODY includes the cost of Elgin standard white finish paint. It does not however, include the price of the chassis

NOTE: The chassis being supplied by a customer or dealer must comply completely with all Elgin requirements or the cha

NOTE: For cost of sweeper mounted on any other chassis, consult factory.

NOTE: One year warranty on all Elgin supplied parts and labor. Consult your Elgin dealer for full warranty details.

MODEL: ROAD WIZARD
EFFECTIVE DATE: 01/01/2020
SUPERCEDES ALL PREVIOUS PRICE LISTS
DEALER PRICE LIST (U.S. DOLLARS)
REV #

STANDARD FEATURES

Aux-engine;
Two-stage dry type with restriction indicator (at engine) and precleaner
Broom side, 46 "steel vertical digger 4 or 5 segment
Broom side, hydraulic floating suspension, hydraulic deploy
Broom, main, 34" diameter, 60" wide prefab disposable
Camera, Rear with in-cab monitor
Conveyor chain, hardened with polyurethane sprockets
Conveyor, 11 flight squeegee with rubber edging
Conveyor, lift independent from main broom
Conveyor, three piece replaceable wear plates
Conveyor flush out system
Conveyor rasie in reverse
Conveyor stall alarm
Spring Assist Dirt shoes, heavy duty single row carbide steel (rubber isolated)
Electric backup alarm
Engine, sweeper, diesel, tier 4 FINAL, 74 HP
Hopper inspection door
Hopper, 5.4 cu yd with window and skylight
Hopper up visual audible indicator
Hopper, variable high dump, 11'02", 5.4 yard
Hose, hydrant fill, 16'8" (5080 mm) with strainer and coupling
Hydraulic oil level gauge w/ external thermomenter and in-cab level light
Lights, automatic backup
Lights, combination tail/stop, separate amber signal
Lights, flood light, one per broom (3)
Manuals, operator and parts
Rear broom cover and anti-carryover wrap
Rear broom spray bar
Rear right hand flood light
Reflectors, set of 2
Sidebroom speed control, external to cab
Sweep resume / raise in reverse
Tactile controls for all sweep functions
Tool storage
Variable speed brooms (external)
Water fill, anti-siphon
Water level indicator in-cab
Water Pump, electric diaphragm
Water tank, molded polyethylene, 360 gallon total nominal capacity

QUANTITY	PART NUMBER	MODEL DESCRIPTION	2020 LIST PRICE	2020 EXTENDED
		-----ADDITIONAL MANUALS----		
0	0701680	ROAD WIZARD OPERATORS MANUAL	$55.00	$0.00
0	0702460	ROAD WIZARD SERVICE MANUAL	$95.00	$0.00
0	0702240	ROAD WIZARD PARTS BOOK	$90.00	$0.00
0	0704072	CUMMINS OPERATORS & MAINTENANCE MANUAL	$135.00	$0.00
0	0704073	CUMMINS TROUBLESHOOTING MANUAL	$180.00	$0.00
		--------ALARMS----------		
0	1117644	ECCO SA940 SMART ALARM (ILO of STD)	$295.00	$0.00
0	1101528	LATCHING ELEVATOR REVERSE AND ALARM	$420.00	$0.00
0	1104970	HOPPER UP CONSTANT ALARM	$375.00	$0.00
0	1104705	HOPPER FULL INDICATOR	$830.00	$0.00
		-------AUTO LUBE----------		
0	1101559	MIDWEST AUTO LUBE - SWEEPER ONLY	$5,240.00	$0.00
		----------BROOMS---------		
0	1035616	DOUBLE WRAP MAIN BROOM	$480.00	$0.00
0	1035617	POLY/WIRE WAFER MAIN BROOM	$560.00	$0.00
0	1058158	STRIP MAIN BROOM (URB)	$470.00	$0.00
0	1077151	URB STRIP MAIN BROOM W/CENTER SWEEP MANDREL	$470.00	$0.00
0	1095046	ALUMINUM SIDE BROOM SEGMENTS - BLUE STEEL	$345.00	$0.00
0	1096691	DEDUCT MAIN BROOM & CORE	-$222.72	$0.00
		--------DECALS----------		
0	1101151	RED LOG/SWOOSH - ROAD WIZARD	$0.00	$0.00
0	1101152	WHITE LOGO/SWOOSH - ROAD WIZARD	$0.00	$0.00
0	1101037	SLOW MOVING VEHICLE SIGN	$165.00	$0.00
0	1122929	SHIP DECALS AND SWOOSH LOOSE IN HOPPER	$0.00	$0.00
		----------GAUGES----------		
0	1119940	IN-CAB AUXILIARY ENGINE AIR RESTRICTION GAUGE	$815.00	$0.00
0	1101379	BROOM HOUR METERS	$405.00	$0.00
0	1111656	HYDRAULIC OIL TEMP DISPLAY (IN CAB)	$320.00	$0.00
		----------HOPPER----------		
0	1104350	LIFELINER HOPPER SYSTEM W/WARRANTY	$5,750.00	$0.00
0	1125415	STAINLESS STEEL HOPPER	$11,360.00	$0.00

MODEL: ROAD WIZARD
EFFECTIVE DATE: 01/01/2020
SUPERCEDES ALL PREVIOUS PRICE LISTS
DEALER PRICE LIST (U.S. DOLLARS)
REV #

QUANTITY	PART NUMBER	MODEL DESCRIPTION	2020 LIST PRICE	2020 EXTENDED
		---------LIGHTS----------		
0	1103553	PACKAGE 1 : SINGLE REAR/SINGLE HOPPER BEACON; LED WITH GUARD	$2,050.00	$0.00
0	1103533	PACKAGE 2 : DUAL REAR/SINGLE HOPPER BEACON; LED WITH GUARD	$2,805.00	$0.00
0	1125926	PACKAGE 3 : DUAL REAR/SINGLE HOPPER BEACON; LED WITH GUARD & LED ARROWSTICK	$4,385.00	$0.00
0	1104618	PACKAGE 4 : SINGLE REAR/SINGLE HOPPER MOUNT AND GUARD - W/O BEACONS	$1,675.00	$0.00
0	1104619	PACKAGE 5 : DUAL REAR/SINGLE HOPPER MOUNT AND GUARD - W/O BEACONS	$2,080.00	$0.00
0	1102735	LED STOP/TAIL/TURN/REAR ID/CLEARANCE LIGHTS	$370.00	$0.00
0	1125927	REAR MOUNTED LED ARROWSTICK	$1,815.00	$0.00
0	1102736	(2) REAR LOW MOUNTED OVAL AMBER LED FLASHERS	$445.00	$0.00
0	1103898	(2) REAR HIGH MOUNTED OVAL AMBER LED FLASHERS	$450.00	$0.00
0	1104481	ARROWBOARD - REAR	$2,155.00	$0.00
		----------PAINT----------		
0	4810001	PAINT SWEEPER STANDARD WHITE	$0.00	$0.00
0	4811018	PAINT SWEEPER YELLOW RAL 1018	$525.00	$0.00
0	4811023	PAINT SWEEPER YELLOW RAL 1023	$525.00	$0.00
0	4811037	PAINT SWEEPER YELLOW RAL 1037	$525.00	$0.00
0	4813020	PAINT SWEEPER TRAFFIC RED RAL 3020	$525.00	$0.00
0	SPECIAL	PAINT SWEEPER ANY OTHER RAL COLOR	1285.00	$0.00
0	SPECIAL	PAINT SWEEPER NON RAL COLOR	3890.00	$0.00
0	1069927	ANTI GRAFFITI COATING	$3,860.00	$0.00
		-------PM10 OPTIONS-------		
0	1115479	PM10 COMPLIANT (RULE 1186)	$3,260.00	$0.00
		----------SAFETY----------		
0	1104991	REMOVE REAR CAMERA	$0.00	$0.00
0	1095548	LEFT HAND SIDE CAMERA	$610.00	$0.00
0	9306848	TRIANGLE REFLECTIVE FLARES (3)	$95.00	$0.00
		-------SWEEP COMPONTENTS--		
0	1100656	SIDE BROOM TILT - RIGHT	$1,010.00	$0.00
0	1100660	SIDE BROOM TILT - LEFT	$1,010.00	$0.00
0	1117070	SIDE BROOM TILT W/INDICATOR - RIGHT	$1,080.00	$0.00
0	1117071	SIDE BROOM TILT W/INDICATOR - LEFT	$1,080.00	$0.00
0	1101385	RUBBER MOUNTED CARBIDE DRAG SHOES TWO-ROW (ILO STD)	$825.00	$0.00
0	1102732	RUBBER DRAG-SHOES (ILO STD)	$135.00	$0.00
0	1104238	BORON DRAG SHOES	$145.00	$0.00
0	1117430	IN-CAB VARIABLE SPEED ELEVATOR/CONVEYOR **(MUST ORDER 1103612 SIDE BROOM REVERSE)**	$3,470.00	$0.00
0	1103612	IN-CAB SIDEBROOM SPEED CONTROLS, REVERSING	$2,130.00	$0.00
0	1114619	RUBBER BELT CONVEYOR (ILO STANDARD SQUEEGEE)	$0.00	$0.00
0	1106049	HEAVY DUTY LOWER ROLLER **(MUST SELECT RUBBER BELT CONVEYOR OPTION)**	$1,070.00	$0.00
0	1116316	LOWER CONVEYOR DEFLECTOR **(MUST SELECT RUBBER BELT CONVEYOR OPTION)**	$555.00	$0.00
		-------SWEEPER ENGINE-----		
0	1120322	AUXILIARY ENGINE BATTERY DISCONNECT SWITCH	$540.00	$0.00
0	6063004	EXTRA KEY	$50.00	$0.00
0	1102752	SYKLONE PRE CLEANER	$680.00	$0.00
0	1119563	BLOCK HEATER	$475.00	$0.00
		-----TOOLS/TOOLBOXES------		
0	1053426	TOOL KIT	$790.00	$0.00
0	1057687	TOOL BOX W/TOOLS	$765.00	$0.00
0	1036150	HYDRANT WRENCH	$100.00	$0.00
		--------WATER SYSTEM------		
0	1032484	25' WATER FILL HOSE (ILO 16' 8")	$205.00	$0.00
0	1121010	AIR PURGE FOR WATER SYSTEM	$400.00	$0.00
0	1114604	WATER SIDEBROOM FUNCTION CONTROL (ILO MANUAL) **(USE WITHOUT EXTENDED SIDEBROOM REACH)**	$525.00	$0.00
0	1121611	WATER SIDEBROOM FUNCTION CONTROL (ILO MANUAL) **(USE WITH EXTENEDED SIDEBROOM REACH)**	$525.00	$0.00

MODEL: ROAD WIZARD
EFFECTIVE DATE: 01/01/2020
SUPERCEDES ALL PREVIOUS PRICE LISTS
DEALER PRICE LIST (U.S. DOLLARS)
REV #

QUANTITY	PART NUMBER	MODEL DESCRIPTION	2020 LIST PRICE	2020 EXTENDED
		-----M2 CHASSIS OPTIONS-----		
0	1109607	12" CONVEX MIRRORS (IL0 STD 8")	$340.00	$0.00
0	1081188	SPARE CHASSIS KEY	$55.00	$0.00
0	1081365	IN CAB AIR FILTER RESTRICTION INDICATOR	$890.00	$0.00
0	1121035	(2) AIR CLOTH HI-BACK SEATS	$2,095.00	$0.00
0	1121036	(1) AIR CLOTH HI-BACK SEAT	$1,085.00	$0.00
0	1120505	SPARE TIRE & WHEEL, BALANCED	$1,415.00	$0.00
0	1081909	SINGLE ARM REST - VINYL **(ONLY W/AIR RIDE SEATS)**	$390.00	$0.00
0	1081910	DUAL ARM REST - VINYL **(ONLY W/AIR RIDE SEATS)**	$730.00	$0.00
0	1081911	SINGLE ARM REST - CLOTH **(ONLY W/AIR RIDE SEATS)**	$390.00	$0.00
0	1081912	DUAL ARM REST - CLOTH **(ONLY W/AIR RIDE SEATS)**	$730.00	$0.00
0	1081956	DAYTIME RUNNING LIGHTS	$1,130.00	$0.00
0	1090653	DUAL AIR HORNS	$1,665.00	$0.00
0	1101560	MIDWEST AUTOLUBE - SWEEPER/TRUCK	$7,475.00	$0.00
0	1101567	2 1/2 LB. FIRE EXTINGUISHER	$230.00	$0.00
0	1101568	5 LB. FIRE EXTINGUISHER	$260.00	$0.00
0	4820001	CAB STANDARD WHITE	$0.00	$0.00
0	1063734	M2 (IN STOCK) CAB SPECIAL COLOR	$4,015.00	$0.00
0	1108053	FULL WIDTH FRONT SPRAY BAR	$780.00	$0.00
0	1120361	EXTENDED REACH RIGHT HAND SIDEBROOM	$1,435.00	$0.00
0	1120782	EXTENDED REACH RIGHT AND LEFT HAND SIDEBROOMS	$2,010.00	$0.00
		-----NAVISTAR CHASSIS OPTIONS-----		
0	4820001	CAB STANDARD WHITE	$0.00	$0.00
0	1063731	NAV CAB PAINTED SPECIAL COLOR	$3,865.00	$0.00
0	1086733	LEFT HAND FENDER MOUNTED MIRROR	$540.00	$0.00
0	1101568	5 LB. FIRE EXTINGUISHER	$260.00	$0.00
0	1091761	EXTRA KEY	$70.00	$0.00
0	1091770	(2) ELECTRIC & (1) AIR HORN	$1,990.00	$0.00
0	1097641	NATIONAL AIR RIDE SEAT - PASSENGER SIDE - VINYL	$2,475.00	$0.00
0	1097643	NATIONAL AIR RIDE SEAT-PASSENGER SIDE - CLOTH	$2,340.00	$0.00
0	1097644	NATIONAL AIR RIDE SEAT-PASSENGER SIDE- CLOTH W/ARM REST	$2,490.00	$0.00
0	1097645	NATIONAL AIR RIDE SEAT - DRIVER SIDE - VINYL	$2,200.00	$0.00
0	1097647	NATIONAL AIR RIDE SEAT - DRIVER SIDE - CLOTH	$2,340.00	$0.00
0	1097648	NATIONAL AIR RIDE SEAT - DRIVER SIDE - CLOTH W/ARM REST	$2,685.00	$0.00
0	1099317	(1) ELECTRIC HORN	$415.00	$0.00
0	1101567	2 1/2 LB. FIRE EXTINGUISHER	$230.00	$0.00
0	1120361	EXTENDED REACH RIGHT HAND SIDEBROOM	$1,435.00	$0.00
0	1120782	EXTENDED REACH RIGHT AND LEFT HAND SIDEBROOMS	$2,010.00	$0.00
		---------WARRANTY---------		
0	EW-ME-NA-2PL	ROAD WIZARD 2ND YEAR PARTS/LABOR	$2,884.00	$0.00
0	EW-ME-NA-3PL	ROAD WIZARD 3RD YEAR PARTS/LABOR	$5,445.00	$0.00
0	EW-ME-NA-4PL	ROAD WIZARD 4TH YEAR PARTS/LABOR	$7,765.00	$0.00
0	EW-ME-NA-5PL	ROAD WIZARD 5TH YEAR PARTS/LABOR	$9,871.00	$0.00
		------FREIGHT RATES------		
0	FRT-116-001	SELF SHIPPING DOCK CHARGE	$595.00	$0.00
0	FRT-116-002	FREIGHT-IL,WI,IA,IN,MI,MN,KY	$1,310.00	$0.00
0	FRT-116-003	FREIGHT-TN,WV,PA,NY	$2,850.00	$0.00
0	FRT-116-004	FREIGHT-NH,VT,ME	$3,595.00	$0.00
0	FRT-116-005	FREIGHT-NEW YORK CITY	$4,110.00	$0.00
0	FRT-116-006	FREIGHT-ND,SD,NE,OK,KS,AR,AL,MO	$2,715.00	$0.00
0	FRT-116-007	FREIGHT-AZ,UT	$5,390.00	$0.00
0	FRT-116-008	FREIGHT-CA,NV,ID,OR,WA	$6,355.00	$0.00
0	FRT-116-009	FREIGHT- CHICAGO/MILWAUKEE	$900.00	$0.00
0	FRT-116-010	FREIGHT-FL,LA,TX,NM,CO,WY,MT	$4,145.00	$0.00
0	FRT-116-011	FREIGHT-OH,ST.LOUIS METRO	$1,530.00	$0.00
0	FRT-116-012	FREIGHT,MS,GA,SC,NC,VA,MD	$3,130.00	$0.00
0	FRT-116-013	FREIGHT - RI,DE,CT,NJ,MA	$2,740.00	$0.00
0	FRT-116-014	FREIGHT - LAREDO, TX	$6,700.00	$0.00
0	FRT-116-015	SPECIALIZED TRANSPORT EQUIPMENT	$1,030.00	$0.00
			SUB TOTAL	**$0.00**
		-----DISCOUNTS-----		
0	DISC-116-ADDL	ADDITIONAL DISCOUNT	$0.00	$0.00
0	DISC-116-PROMO	PROMO DISCOUNT	$0.00	$0.00

SPECIAL RFQ OPTIONS / OTHER DESCRIPTIONS

			GRAND TOTAL	**$0.00**

MODEL: WATERLESS PELICAN P T4F 99HP
EFFECTIVE DATE: 1/01/2020
SUPERCEDES ALL PREVIOUS PRICE LISTS
LIST PRICE LIST (U.S. DOLLARS)

Purchase Order #	
Order Date:	
Delivery Date Requirement If Any:	

Ship To Address:
State Penalty Clause If Applicable:

QUANTITY	PART NUMBER	MODEL DESCRIPTION	2020 LIST PRICE	2020 EXTENDED
		TIER 4F ENGINE		
0	1125164	**WATERLESS PELICAN P DUAL TIER 4F 99HP**	$255,000	$0.00
		Dust control skirts, dust extraction fan and filtered air exhaust, with dual hydraulically driven gutter brooms, Tier 4F 99HP JD 4045TF emission diesel engine, hydrostatic drive and steering, chassis and wheels powder coated standard white and including the standard features below.		

NOTE: One year warranty on all Elgin supplied parts and labor. Consult your Elgin dealer for full w

STANDARD FEATURES

Air cleaner,dry type w/safety element and restriction indicator
Air conditioner
Alternator, 120 amp
Anti Siphon water fill
Automatic engine shutdown (oil pressure/engine temperature)
Automatic pickup in reverse
B20 biodiesel compatible
Back up alarm, electric
Battery, maintenance free
Brakes, power
Broom, main, hydraulically suspended
Broom, main, in cab pressure control
Broom, main, prefab, disposable
Broom, side broom, hydraulically suspended
Broom, side broom, in cab pressure control
Bumper pads, front jack
Coolant recovery system
Doors, see through glass, prop-able
Electronic Throttle
Engine, hour meter
Gauges & Warning lights:
  engine oil temperature
  engine oil pressure
  fuel level
  speedometer & odometer w/trip set
Fenders, over front wheels
Flushing system for hopper/conveyor
Fuel tank, 35 gallons
Fuel Water separator with indicator light
Heater, pressurizer with filtered air, defroster
Hose, hydrant fill, 16' 8" with coupling
Light, spotlight, adjustable, one per side broom
Lights, 2 combination, tail/stop lights
Lights, headlights, multiple beam
Lights, low water light
Low Hydraulic Warning
Lower roller wash out.
Main broom controls in cab
Manuals, operator and parts
Mirror, inside rear view
Mirrors, outside, front mounted 6" fish eyes
Mirrors, outside, front post mounted, west coast type, one each side
Parking brake with interlock
Rear Camera & in cab monitor
Return to sweep feature
Seat Belts (both sides for dual)
Seats, extra wide cordura suspension seats with arm rests
Signals, self-canceling directional with hazard switch
Sprung guide wheel, heavy duty
Steering wheel, tilt and telescoping
Sun visors
Tachometer, diesel engine
Tires, tubeless radials
Tow loops, four
Water tank, Aluminum:
  35 gallon total nominal capacity
Wheels, dual guide
Wheels painted grey
Window, opening front opera
Windshield washer
Windshield wipers with intermittent setting
Windshield, tinted

MODEL: WATERLESS PELICAN P T4F 99HP
EFFECTIVE DATE: 1/01/2020
SUPERCEDES ALL PREVIOUS PRICE LISTS
LIST PRICE LIST (U.S. DOLLARS)

QUANTITY	PART NUMBER	MODEL DESCRIPTION	2020 LIST PRICE	2020 EXTENDED
		----------ALARMS----------		
0	1089339	SMART BACK UP ALARM	$295.00	$0.00
0	1089728	GROTE LOUD MOUTH BACKUP ALARM	$295.00	$0.00
		------AUTO LUBE----------		
0	1096746	MIDWEST AUTO LUBE - DUAL	$6,505.00	$0.00
0	1097099	VOGEL AUTO LUBE - DUAL	$7,355.00	$0.00
		------AUTO SHUTDOWN-------		
0	1087563	HYDRAULIC LEVEL SHUTDOWN	$190.00	$0.00
0	1089429	HYDRAULIC LEVEL & TEMPERATURE SHUTDOWN	$370.00	$0.00
0	1120654	HYDRAULIC TEMPERATURE SHUTDOWN	$190.00	$0.00
		---------BROOMS----------		
0	1091361	STRIP BROOM CENTER SWEEP	$935.00	$0.00
		----CONVEYOR/ELEVATOR-----		
0	1087575	LOWER ROLLER DEFLECTOR	$520.00	$0.00
		----------GAUGES----------		
0	1088858	CHARGE PRESSURE GAUGE-LOOSE	$320.00	$0.00
0	1120827	IN CAB AIR RESTRICTION GAUGE	$390.00	$0.00
		-----MANUALS----		
0	0702262	PELICAN P PARTS BOOK	$90.00	$0.00
0	0701466	PELICAN P OPERATORS MANUAL	$55.00	$0.00
0	0702454	PELICAN P SERVICE	$95.00	$0.00
0	0704058	JOHN DERRE POWERTECH TIER 4 SERVICE MANUAL	$230.00	$0.00
0	0704056	JOHN DERRE 4045 TIER 4 OPERATOR MANUAL	$55.00	$0.00
0	0704057	JOHN DERRE 4045 TIER 4 PARTS BOOK	$110.00	$0.00
		-----LIFELINER SYSTEM / EPOXY COATING-----		
0	1096226	LIFELINER HOPPER SYSTEM W/WARRANTY	$4,135.00	$0.00
		---------LIGHTS----------		
0	1121376	DUAL REAR FLOODS	$480.00	$0.00
0	1087873	LED CLEARANCE LIGHTS	$290.00	$0.00
0	1093229	(2) REAR FLOODS & BACKUP LIGHTS	$495.00	$0.00
0	1094481	RIGHT HAND SEAL BEAM WORK LIGHT	$155.00	$0.00
0	1094482	RIGHT HAND & LEFT HAND SEAL BEAM WORK LIGHTS	$270.00	$0.00
0	1101214	(2) CAB FORWARD FACING FLOOD LIGHTS WITH LIGHT BAR	$450.00	$0.00
0	1101215	(2) CAB FORWARD FACING FLOOD LIGHTS WITHOUT LIGHT BAR	$745.00	$0.00
0	1101273	LED STOP/TAIL/TURN **NOT COMPATIABLE WITH LIGHT PACKAGES 3 & 4**	$370.00	$0.00
0	1114404	(2) CAB FORWARD FACING LED FLOOD LIGHTS WITH LIGHT BAR	$1,150.00	$0.00
0	1114405	(2) CAB FORWARD FACING LED FLOOD LIGHTS WITHOUT LIGHT BAR	$1,480.00	$0.00
0	1120317	LED ALTERNATING & FLASHING LIGHTS IN BATTERY COVER	$1,210.00	$0.00

MODEL: WATERLESS PELICAN P T4F 99HP
EFFECTIVE DATE: 1/01/2020
SUPERCEDES ALL PREVIOUS PRICE LISTS
LIST PRICE LIST (U.S. DOLLARS)

QUANTITY	PART NUMBER	MODEL DESCRIPTION	2020 LIST PRICE	2020 EXTENDED
		---------LIGHTS CONTINUED----------		
0	1124937	PACKAGE 1: ONE LED STROBE W/ GUARD	$995.00	$0.00
0	1124938	PACKAGE 2: TWO LED STROBES W/ GUARD	$1,715.00	$0.00
0	1124939	PACKAGE 3: PACKAGE 2+ FOUR ROOF MOUNTED SWEEP FLASHERS **LED STOP/TAIL/TURN MUST BE ORDERED WITH THIS PACKAGE**	$1,935.00	$0.00
0	1125797	PACKAGE 4: PACKAGE 3 + LED FRONT ID LIGHTS AND REAR LED ARROW STICK **LED STOP/TAIL/TURN MUST BE ORDERED WITH THIS PACKAGE**	$3,080.00	$0.00
0	1124941	PACKAGE 5: FRONT LIGHT MOUNTING RAIL ONLY	$690.00	$0.00
0	1124942	PACKAGE 6: REAR LIGHT MOUNTING RAIL AND WIRE/MOUNT/GUARD FOR 1 LIGHT	$765.00	$0.00
0	1124943	PACKAGE 7: REAR LIGHT MOUNTING RAIL AND WIRE/MOUNT/GUARD FOR 2 LIGHTS	$1,270.00	$0.00
0	1125798	PACKAGE 8: LED ARROWSTICK	$1,695.00	$0.00
		------PELICAN OPTIONS-----		
0	1087540	LICENSE PLATE HOLDER - FRONT & REAR	$220.00	$0.00
0	1087541	LOCKING ENGINE COMPARTMENT	$235.00	$0.00
0	1126939	O-GREASEABLE DIRT SHOES,BORON	$105.00	$0.00
0	1087981	RED LOGO/SWOOSH	$0.00	$0.00
1	1087982	WHITE LOGO/SWOOSH	$0.00	$0.00
0	1122929	SHIP DECALS AND SWOOSH LOOSE IN HOPPER	$0.00	$0.00
0	1123319	SLIDING REAR WINDOW	$930.00	$0.00
0	1123322	STEEL RIGHT HAND DOOR W/ SLIDING WINDOW	$3,090.00	$0.00
0	1123320	STEEL RIGHT & LEFT HAND DOOR W/ SLIDING WINDOW	$4,720.00	$0.00
0	1123323	STEEL RIGHT HAND DOOR	$1,905.00	$0.00
0	1123321	STEEL RIGHT & LEFT HAND DOOR	$3,800.00	$0.00
0	1124181	HEAVY DUTY LIMB GUARD RIGHT HAND ONLY	$1,295.00	$0.00
0	1124182	HEAVY DUTY LIMB GUARD LEFT HAND ONLY	$1,255.00	$0.00
0	1100256	RADIO INSTALL PACKAGE W/O RADIO	$400.00	$0.00
0	1101017	LEFT HAND AND RIGHT HAND "WEST COAST" STYLE MIRRORS HEATED & MOTORIZED. **(DOES NOT HEAT OR MOTORIZE HOPPER CONVEX MIRRORS)**	$1,305.00	$0.00
0	1101244	AM/FM RADIO WITH CD & 2 MAP LIGHTS	$610.00	$0.00
0	1106586	INDUSTRIAL SWEEPING APPLICATION (POWDER) PACKAGE	$0.00	$0.00
		-------REFLECTORS---------		
0	1126078	REFLECTOR (ARMOURED) , SET OF 6	$165.00	$0.00
		------SIDE BROOM TILT-----		
0	1089502	LEFT HAND SIDEBROOM TILT WITH INDICATOR	$1,975.00	$0.00
0	1089503	RIGHT HAND SIDEBROOM TILT WITH INDICATOR	$1,975.00	$0.00
		----------SEATS----------		
0	1087555	RIGHT HAND BOSTROM AIR RIDE MID BACK CLOTH	$1,030.00	$0.00
0	1087556	LEFT HAND BOSTROM AIR RIDE MID BACK CLOTH	$1,030.00	$0.00
0	1087677	ALL VINYL STD SEAT	$40.00	$0.00
0	1088301	RIGHT HAND BOSTROM AIR RIDE HI BACK CLOTH	$1,030.00	$0.00
0	1088302	LEFT HAND BOSTROM AIR RIDE HI BACK CLOTH	$1,030.00	$0.00
0	1089317	LEFT HAND BOSTROM AIR RIDE MID BACK - VINYL	$1,030.00	$0.00
0	1089510	LEFT HAND MAGNUM STANDARD SEAT	$905.00	$0.00
0	1093157	HEADREST FOR MAGNUM STD SEAT	$425.00	$0.00

MODEL: WATERLESS PELICAN P T4F 99HP
EFFECTIVE DATE: 1/01/2020
SUPERCEDES ALL PREVIOUS PRICE LISTS
LIST PRICE LIST (U.S. DOLLARS)

QUANTITY	PART NUMBER	MODEL DESCRIPTION	2020 LIST PRICE	2020 EXTENDED
		---------SAFETY----------		
0	1087559	(1) 2 1/2 LB. FIRE EXTINGUISHER	$230.00	$0.00
0	1088661	(2) 2 1/2 LB. FIRE EXTINGUISHER	$455.00	$0.00
0	1092020	REMOVE REAR CAMERA	$0.00	$0.00
0	1101067	LEFT HAND SIDE CAMERA	$565.00	$0.00
0	1122587	RIGHT HAND SIDE CAMERA	$565.00	$0.00
		-----SWEEPER ENGINE-------		
0	1087675	BATTERY DISCONNECT SWITCH	$200.00	$0.00
0	1089774	MAGNETIC DRAIN PLUG	$175.00	$0.00
0	1121051	PREMIUM RADIATOR/HEATER HOSES	$1,210.00	$0.00
0	1121306	ENGINE COOLANT FILTER	$535.00	$0.00
		------TIRES/WHEELS--------		
0	1101068	SPARE DRIVE WHEEL PAINTED GREY	$685.00	$0.00
0	1103546	SPARE GUIDE WHEEL PAINTED GREY	$1,425.00	$0.00
0	1101669	SPARE DRIVE WHEEL PAINTED GREY & GOODYEAR TIRE (16 PLY)	$1,235.00	$0.00
0	1120585	SPARE GUIDE WHEEL PAINTED GREY & GOODYEAR TIRE (16 PLY)	$995.00	$0.00
		----------TOOLS----------		
0	1036150	HYDRANT WRENCH	$100.00	$0.00
0	1049145	LUG WRENCH	$405.00	$0.00
0	1089549	RIGHT HAND LOCKABLE TOOLBOX W/HOSE BASKET	$1,090.00	$0.00
0	1090342	TOOL KIT (NO TOOL BOX)	$660.00	$0.00
0	1090584	MECHANICAL JACK RATCHET	$1,525.00	$0.00
0	1121064	LEFT HAND LOCKABLE TOOL BOX	$1,090.00	$0.00
		----------PAINT----------		
0	4810001	STANDARD WHITE	$0.00	$0.00
0	4811018	RAL 1018 ZINC YELLOW	$525.00	$0.00
0	4811023	RAL 1023 TRAFFIC YELLOW	$525.00	$0.00
0	4811037	RAL 1037 SUN YELLOW	$525.00	$0.00
0	4813020	RAL 3020 TRAFFIC RED	$525.00	$0.00
0	SPECIAL	PAINT SWEEPER ANY OTHER RAL COLOR	$1,285.00	$0.00
0	SPECIAL	WHEELS PAINTED SAME COLOR AS BODY	$650.00	$0.00
0	SPECIAL	PAINT SWEEPER NON RAL COLOR	$3,890.00	$0.00
0	1118326	CUSTOM COLOR BODY PANELS	$0.00	$0.00

MODEL: WATERLESS PELICAN P T4F 99HP
EFFECTIVE DATE: 1/01/2020
SUPERCEDES ALL PREVIOUS PRICE LISTS
LIST PRICE LIST (U.S. DOLLARS)

QUANTITY	PART NUMBER	MODEL DESCRIPTION	2020 LIST PRICE	2020 EXTENDED
		--------WARRANTY----------		
0	EW-NR-NA-2PL	PELICAN NP 2ND YEAR PARTS/LABOR	$3,796.00	$0.00
0	EW-NR-NA-3PL	PELICAN NP 3RD YEAR PARTS/LABOR	$6,615.00	$0.00
0	EW-NR-NA-4PL	PELCIAN NP 4TH YEAR PARTS/LABOR	$11,931.00	$0.00
0	EW-NR-NA-5PL	PELICAN NP 5TH YEAR PARTS/LABOR	$16,812.00	$0.00
		-------FREIGHT RATES-------		
0	FRT-104-001	SELF SHIPPING DOCK CHARGE	$595.00	$0.00
0	FRT-104-002	FREIGHT-IL,WI,IA,IN,MI,MN,KY	$1,310.00	$0.00
0	FRT-104-003	FREIGHT-TN,WV,PA,NY	$2,850.00	$0.00
0	FRT-104-004	FREIGHT-NH,VT,ME	$3,595.00	$0.00
0	FRT-104-005	FREIGHT-NEW YORK CITY	$4,110.00	$0.00
0	FRT-104-006	FREIGHT-ND,SD,NE,OK,KS,AR,AL,MO	$2,715.00	$0.00
0	FRT-104-007	FREIGHT-AZ,UT	$5,390.00	$0.00
0	FRT-104-008	FREIGHT-CA,NV,ID,OR,WA	$6,355.00	$0.00
0	FRT-104-009	FREIGHT- CHICAGO/MILWAUKEE	$900.00	$0.00
0	FRT-104-010	FREIGHT-FL,LA,TX,NM,CO,WY,MT	$4,145.00	$0.00
0	FRT-104-011	FREIGHT-OH,ST.LOUIS METRO	$1,530.00	$0.00
0	FRT-104-012	FREIGHT,MS,GA,SC,NC,VA,MD	$3,130.00	$0.00
0	FRT-104-013	FREIGHT - RI,DE,CT,NJ,MA	$2,740.00	$0.00
0	FRT-104-014	FREIGHT - LAREDO, TX	$6,700.00	$0.00
0	FRT-104-015	SPECIALIZED TRANSPORT EQUIPMENT	$1,030.00	$0.00
			SUB TOTAL	**$0.00**
		-----DISCOUNTS-----		
0	DISC-104-ADDL	ADDITIONAL DISCOUNT	$0.00	$0.00

SPECIAL RFQ OPTIONS / OTHER DESCRIPTIONS

GRAND TOTAL	**$0.00**

MODEL: WHIRLWIND TIER 4F
EFFECTIVE DATE: 01/01/2020
SUPERCEDES ALL PREVIOUS PRICE LISTS
DEALER PRICE LIST (U.S. DOLLARS)

Purchase Order #	
Order Date:	
Delivery Date Requirment If Any:	

Ship To Address:
State Penalty Clause If Applicable:

QUANTITY	PART NUMBER	MODEL DESCRIPTION	2020 LIST PRICE	2020 EXTENDED
0	1121024	**WHIRLWIND MV DUAL 28" SIDEBROOM (M2)**	$177,750	$0.00
0	1121025	**WHIRLWIND MV SINGLE 28" SIDEBROOM (M2)**	$163,250	$0.00
0		Tier 4F emissions, 8 cu. yd. hopper, 28 in. (711 mm) trailing arm side broom on right-hand side (SINGLE) or both right and left hand sides (DUAL), ergonomic control console, sweeper is powder coated from powder coatings chart 2003/N with powder coated gray undercarriage and includes the standard features listed below.	Consult Factory	
0	1121028	**WHIRLWIND MV DUAL 28" SIDEBROOM (IH)**	$177,750	$0.00
0	1121029	**WHIRLWIND MV SINGLE 28" SIDEBROOM (IH)**	$163,250	$0.00
0		Tier 4F emissions, 8 cu. yd. hopper, 28 in. (711 mm) trailing arm side broom on right-hand side (SINGLE) or both right and left hand sides (DUAL), ergonomic control console, sweeper is powder coated from powder coatings chart 2003/N with powder coated gray undercarriage and includes the standard features listed below.		
0	1121030	**WHIRLWIND MV DUAL 28" SIDEBROOM (PETERBILT)**	$177,750	$0.00
0	1121031	**WHIRLWIND MV SINGLE 28" SIDEBROOM (PETERBILT)**	$163,250	$0.00
0		Tier 4F emissions, 8 cu. yd. hopper, 28 in. (711 mm) trailing arm side broom on right-hand side (SINGLE) or both right and left hand sides (DUAL), ergonomic control console, sweeper is powder coated from powder coatings chart 2003/N with powder coated gray undercarriage and includes the standard features listed below.		
0	1121267	**WHIRLWIND MV DUAL 36" SIDEBROOM (M2)**	$177,750	$0.00
0	1121016	**WHIRLWIND MV SINGLE 36" SIDEBROOM (M2)**	$163,250	$0.00
0		Tier 4F emissions, 8 cu. yd. hopper, 36 in. (711 mm) trailing arm side broom on right-hand side (SINGLE) or both right and left hand sides (DUAL), ergonomic control console, sweeper is powder coated from powder coatings chart 2003/N with powder coated gray undercarriage and includes the standard features listed below.		
0	1121020	**WHIRLWIND MV DUAL 36" SIDEBROOM (IH)**	$177,750	$0.00
0	1121021	**WHIRLWIND MV SINGLE 36" SIDEBROOM (IH)**	$163,250	$0.00
		Tier 4F emissions, 8 cu. yd. hopper, 36 in. (711 mm) trailing arm side broom on right-hand side (SINGLE) or both right and left hand sides (DUAL), ergonomic control console, sweeper is powder coated from powder coatings chart 2003/N with powder coated gray undercarriage and includes the standard features listed below.		
0	1121022	**WHIRLWIND MV DUAL 36" SIDEBROOM (PETERBILT)**	$177,750	$0.00
0	1121023	**WHIRLWIND MV SINGLE 36" SIDEBROOM (PETERBILT)**	$163,250	$0.00
		Tier 4F emissions, 8 cu. yd. hopper, 36 in. (711 mm) trailing arm side broom on right-hand side (SINGLE) or both right and left hand sides (DUAL), ergonomic control console, sweeper is powder coated from powder coatings chart 2003/N with powder coated gray undercarriage and includes the standard features listed below.		
0	SPECIAL	**WHIRLWIND MV DUAL 28" SIDEBROOM 10 YD HOPPER**	Consult Factory	$0.00
0		Tier 4F emissions, 10 cu. yard hopper, 28 in. (711 mm) trailing arm side brooms on both right and left hand sides, ergonomic control console, sweeper is powder coated from powder coatings chart 2003/N with powder coated gray undercarriage and includes the standard features listed below.		
0	SPECIAL	**WHIRLWIND MV DUAL 36" SIDEBROOM 10 YD HOPPER**	Consult Factory	$0.00
0		Tier 4F emissions, 10 cu. yard hopper, 36 in. (711 mm) trailing arm side brooms on both right and left hand sides, ergonomic control console, sweeper is powder coated from powder coatings chart 2003/N with powder coated gray undercarriage and includes the standard features listed below.		

MODEL: WHIRLWIND TIER 4F
EFFECTIVE DATE: 01/01/2020
SUPERCEDES ALL PREVIOUS PRICE LISTS
DEALER PRICE LIST (U.S. DOLLARS)

QUANTITY	PART NUMBER	MODEL DESCRIPTION	2020 LIST PRICE	2020 EXTENDED
		CHASSIS		
0	1124546	IH M7 (V8) DUAL STEER (36" SB) 2017 EMISSIONS (NO FRONT TOW HOOKS, SEATS ARE VINYL) LIMITED QTY	Consult Factory	$0.00
0	1121858	M2 DUAL STEER (36" SB) (2013 EMISSIONS)	Consult Factory	$0.00
0	1124557	PETERBILT RIGHT HAND STEER 28" SB	Consult Factory	$0.00
0	1124558	PETERBILT DUAL STEER 28" SB	Consult Factory	$0.00
0	1124555	PETERBILT RIGHT HAND STEER 36" SB	Consult Factory	$0.00
0	1124556	PETERBILT DUAL STEER 36" SB	Consult Factory	$0.00

*****A 10 yard hopper requires a Chassis with extended wheelbase to accommodate larger hopper. Consult factory for fu**

*****For International or Freightliner M2 with 28" sidebrooms; Chassis mounitng/altreations is a special, please consult i**

******FOR A SKID MOUNT UNIT, PLEASE CONSULT FACTORY FOR FUTHER DETAILS*****

		CHASSIS MOUNTING CHARGE		
0	1122439	M2 172" WB (36" DUAL SIDEBROOMS)	$2,680.00	$0.00
0	SPECIAL	M2 172" WB (36" SINGLE SIDEBROOM)	$2,680.00	$0.00
0	SPECIAL	IH M7 (V8) 177" WB (36" DUAL SIDEBROOMS)	$2,680.00	$0.00
0	SPECIAL	IH M7 (V8) 177" WB (36" SINGLE SIDEBROOM)	$2,680.00	$0.00
0	1122579	PETERBILT 36" SIDEBROOMS	$2,680.00	$0.00
0	1122551	PETERBILT 28" SIDEBROOMS	$2,680.00	$0.00
0	SPECIAL	CUSTOMER SUPPLIED HANDLING CHARGE	$3,688.00	$0.00
0	SPECIAL	CUSTOMER SUPPLIED CHASSIS ALTERATIONS	CONTACT INSIDE SALES	$0.00

NOTE: Customer Supplied Chassis requires both the Chassis Alterations and the Handling Charge

1	4820001	PAINT CAB STANDARD WHITE	N/C	$0.00
1	4810001	PAINT SWEEPER STANDARD WHITE	N/C	$0.00
0	SPECIAL	SWEEPER COLOR OTHER THAN STANDARD WHITE	SEE INSIDE SALES	$0.00

1 NOTE: A BODY includes the cost of Elgin standard white finish paint. It does not however, include the price of the c
1 NOTE: The chassis being supplied by a customer or dealer must comply completely with all Elgin requirements or tl
1 NOTE: For cost of sweeper mounted on any other chassis, consult factory.
1 NOTE: One year warranty on all Elgin supplied parts and labor. Consult your Elgin dealer for full warranty details.

STANDARD FEATURES

Auxiliary Engine:
- John Deere 4045T, 4 cylinder Turbocharged diesel
- Alternator, 120 amp.
- Horsepower: 74 HP (55 kW) at 2400 RPM
- Displacement: 276 cu. in. (4.5 L)

Auto Shutdown Auxiliary Engine
Backup alarm, electric
Camera, Rear View
Debris Hopper Volumetric Capacity 8.0 yd3 (6.0 m3)
Drive: Fluid coupler and 5-groove banded power beltwith adjustable idler pulley
Doors, fiberglass access doors provide easy service and maintenance on auxiliary engine, hydraulic and electrical
Electronic Throttle
Fuel tank, 50 gallon (189 L)
Fuel water separator for auxiliary engine
Full Load Indicator Weight actuated with in-cab warning light
Hose, hydrant fill, 16208" (5080 mm) with coupling
Hopper rear door, hydraulically opened/closed and locked/unlocked with external controls
Hydraulic oil cooler

In cab hopper dump
Individual water switches
LED clearance lights
Manuals, operator and parts
Memory Sweep : Sweep resume feature
Rocker switches in central console gauges:
- Tachometer, hour meter, oil pressure,
- fuel, voltmeter, coolant temperature,
- spray water level gauge, hopper up,
- hopper rear door open, full load indicator

Sidebroom work lights
Spray Nozzles (Quick Disconnect Type) :
- (7) inside each suction nozzle
- (4) at extension broom
- (3) at each side broom (36" broom)

Water Tank Construction :
- Dual polyethylene, removable

Water System Capacity 335 gal. (1268 L)

MODEL: WHIRLWIND TIER 4F
EFFECTIVE DATE: 01/01/2020
SUPERCEDES ALL PREVIOUS PRICE LISTS
DEALER PRICE LIST (U.S. DOLLARS)

QUANTITY	PART NUMBER	MODEL DESCRIPTION	2020 LIST PRICE	2020 EXTENDED
		----------ALARM---------		
0	1048703	BACKUP ALARM - SMART	$450.00	$0.00
0	1122644	BACK UP ALARM - PRECO	$290.00	$0.00
		---------AUTO LUBE--------		
0	1121851	AUTO LUBE - SWEEPER ONLY	$6,190.00	$0.00
		------AUX ENGINE----------		
0	1120793	TURBO II PRECLEANER	$510.00	$0.00
0	1121842	SY-KLONE AUXILIARY PRECLEANER	$635.00	$0.00
0	1078204	AUXILIARY AIR FILTER RESTRICTION INDICATOR LIGHT	$665.00	$0.00
0	1121730	COLD WEATHER STARTING KIT	$510.00	$0.00
0	1121729	BLOCK HEATER	$475.00	$0.00
0	6063004	ADDITIONAL IGNITION KEY	$50.00	$0.00
0	1120393	AUXILIARY HYDRAULIC PUMP W/ IN-CAB DUMP	$1,440.00	$0.00
0	1121823	IDLE DOWN/NO WATER - SINGLE SIDEBROOM	$635.00	$0.00
0	1121824	IDLE DOWN/NO WATER - DUAL SIDEBROOMS	$635.00	$0.00
		----------DECALS---------		
1	1090208	RED LOGO-WHIRLWIND	$0.00	$0.00
0	1090209	WHITE LOGO-WHIRLWIND	$0.00	$0.00
0	1122929	SHIP DECALS AND SWOOSH LOOSE IN HOPPER	$0.00	$0.00
		-----MANUALS-----		
0	0701675	WHIRLWIND MV-3000 OPERATORS	$55.00	$0.00
0	0702247	WHIRLWIND MV-3000 PARTS	$90.00	$0.00
0	0702448	WHIRLWIND MV-3000 SERVICE	$95.00	$0.00
0	0704046	JOHN DEERE OPERATORS	$55.00	$0.00
0	0704047	JOHN DEERE PARTS	$110.00	$0.00
0	0704048	JOHN DEERE SERVICE	$190.00	$0.00
		------PM10 COMPLIANT------		
0	1121807	PM-10 (USE W/DUAL 36" SIDEBROOMS)	$3,150.00	$0.00
0	1121916	PM-10 (USE W/SINGLE 36" SIDEBROOMS)	$3,150.00	$0.00
0	1121917	PM-10 (USE W/DUAL 28" SIDEBROOMS)	$3,150.00	$0.00
0	1121918	PM-10 (USE W/SINGLE 28" SIDEBROOMS)	$3,150.00	$0.00
		----------SAFETY----------		
0	1048643	SLOW MOVING VEHICLE SIGN	$170.00	$0.00
0	1121725	UTILITY COVER LIFTER - RIGHT HAND	$2,765.00	$0.00
0	1122071	REMOVE REAR CAMERA	$0.00	$0.00
0	1096442	CAMERA RIGHT HAND SIDE	$765.00	$0.00
0	1095548	CAMERA LEFT HAND SIDE	$610.00	$0.00
0	1117174	CAMERA (2) FRONT (1) REAR	$1,045.00	$0.00
		----SIDEBROOM OPTIONS----		
0	1121517	VARIABLE SPEED DUAL SIDEBROOMS	$1,335.00	$0.00
0	1121518	VARIABLE SPEED SINGLE SIDEBROOM **(NOT COMPATIBLE WITH DUAL SIDEBROOMS)**	$700.00	$0.00
0	1111175	SIDEBROOM TILT LEFT HAND W/DISPLAY 36"	$1,080.00	$0.00
0	1111176	SIDEBROOM TILT RIGHT HAND W/DISPLAY 36"	$1,080.00	$0.00
0	1121676	SIDEBROOM TILT LEFT HAND 28"	$1,010.00	$0.00
0	1121677	SIDEBROOM TILT RIGHT HAND 28"	$1,010.00	$0.00
		-------SWEEPER OPTIONS----		
0	1067561	NOZZLE 3RD CASTER WHEEL - SINGLE	$435.00	$0.00
0	1067562	NOZZLE 3RD CASTER WHEEL - DUAL	$810.00	$0.00
0	1121301	AIR PURGE	$445.00	$0.00
0	1120044	AUTO SHUTTER LEFT HAND	$1,315.00	$0.00
0	1120045	AUTO SHUTTER RIGHT HAND	$1,315.00	$0.00
0	1120104	AUTO SHUTTER DUAL	$1,800.00	$0.00

MODEL: WHIRLWIND TIER 4F
EFFECTIVE DATE: 01/01/2020
SUPERCEDES ALL PREVIOUS PRICE LISTS
DEALER PRICE LIST (U.S. DOLLARS)

QUANTITY	PART NUMBER	MODEL DESCRIPTION	2020 LIST PRICE	2020 EXTENDED
		----------8 YARD HOPPER----------		
0	1071234	STAINLESS STEEL HOPPER SCREEN	$1,630.00	$0.00
0	1085864	RIGHT HAND INSPECTION DOOR	$465.00	$0.00
0	1085882	LEFT HAND INSPECTION DOOR	$465.00	$0.00
0	1085883	RIGHT HAND INSPECTION DOOR & STEP	$825.00	$0.00
0	1085886	LEFT HAND INSPECTION DOOR & STEP	$825.00	$0.00
0	1101937	STAINLESS STEEL RIGHT HAND INSPECTION DOOR & STEP	$845.00	$0.00
0	1101938	STAINLESS STEEL LEFT HAND INSPECTION DOOR & STEP	$845.00	$0.00
0	1085887	6" HOPPER DRAIN	$860.00	$0.00
0	1089326	6" HOPPER DRAIN STAINLESS STEEL DOOR	$1,830.00	$0.00
0	1092627	LIFELINER HOPPER SYSTEM W/WARRANTY	$8,300.00	$0.00
0	1122610	STAINLESS STEEL HOPPER W/WARRANTY FOR SINGLE BROOM	$17,555.00	$0.00
0	1124223	STAINLESS STEEL HOPPER W/WARRANTY FOR DUAL BROOMS	$17,555.00	$0.00
0	1122546	STAINLESS STEEL HOPPER W/ 6" HOPPER DRAIN W/WARRANTY FOR DUAL BROOM	$18,850.00	$0.00
0	1124224	STAINLESS STEEL HOPPER W/ 6" HOPPER DRAIN W/WARRANTY FOR SINGLE BROOM	$18,850.00	$0.00
		----------10 YARD HOPPER----------		
0	1071234	STAINLESS STEEL HOPPER SCREEN	$1,630.00	$0.00
0	1085864	RIGHT HAND INSPECTION DOOR	$465.00	$0.00
0	1085882	LEFT HAND INSPECTION DOOR	$465.00	$0.00
0	1085883	RIGHT HAND INSPECTION DOOR & STEP	$825.00	$0.00
0	1085886	LEFT HAND INSPECTION DOOR & STEP	$825.00	$0.00
0	1085887	6" HOPPER DRAIN	$860.00	$0.00
0	1089326	6" HOPPER DRAIN SS DOOR	$1,830.00	$0.00
		----------LIGHTS---------		
0	1121132	WIRE/MOUNT HOPPER/REAR	$435.00	$0.00
0	1121133	WIRE/MOUNT HOPPER/REAR W/GUARD	$675.00	$0.00
0	1120559	WIRE/MOUNT (2) HOPPER/REAR W/LED ARROWBOARD (USE W/WANDERING HOSE)	$3,725.00	$0.00
0	1120560	WIRE/MOUNT (2) HOPPER/REAR W/LED ARROWBOARD (USE W/OUT WANDERING HOSE)	$3,725.00	$0.00
0	1121740	WIRE/MOUNT (2) REAR HOPPER (USE W/WANDERING HOSE)	$990.00	$0.00
0	1121741	WIRE/MOUNT (2) REAR HOPPER (USE W/OUT WANDERING HOSE)	$1,000.00	$0.00
0	1121500	REAR ARROWBOARD LED	$2,780.00	$0.00
0	1121121	HOPPER/REAR LED BEACON / LED ARROWBOARD	$3,105.00	$0.00
0	1121502	WIRE/MOUNT HOPPER/REAR & GUARD WITH LED ARROWBOARD	$3,225.00	$0.00
0	1120887	REAR LED BEACON	$980.00	$0.00
0	1121096	REAR LED BEACON WITH ARROWSTICK	$2,965.00	$0.00
0	1121098	RIGHT & LEFT HOPPER/REAR LED BEACONS (USE W/WANDERING HOSE)	$1,515.00	$0.00
0	1121099	RIGHT & LEFT HOPPER/REAR LED BEACONS (USE W/O WANDERING HOSE)	$1,515.00	$0.00
0	1121813	(4) ALTERNATING FLASHING REAR LED LIGHTS	$1,910.00	$0.00
0	1121752	(2) REAR BUMPER STROBES	$1,165.00	$0.00
0	1121812	(2) ALTERNATING FLASHING LIGHTS, REAR LED LIGHTS	$950.00	$0.00
0	1120427	DUAL REAR LED FLOOD LIGHTS	$650.00	$0.00
0	1120428	SINGLE REAR LED FLOOD LIGHT	$405.00	$0.00
0	1120440	(2) HOPPER/REAR BEACONS WITH LED ARROWBOARD (USE W/WANDERING HOSE)	$3,640.00	$0.00
0	1120441	(2) HOPPER/REAR BEACONS WITH LED ARROWBOARD (USE W/O WANDERING HOSE)	$3,640.00	$0.00
0	1120425	LED SIDEBROOM LIGHTS (ILO STANDARD)	$510.00	$0.00
0	1120426	LED RIGHT HAND SIDEBROOM LIGHT	$260.00	$0.00
0	1120429	LED SIDEBROOMS & REAR LED FLOOD LIGHTS	$1,160.00	$0.00
0	1120430	LED SIDEBROOM & REAR RIGHT HAND LED FLOOD LIGHT	$905.00	$0.00

MODEL: WHIRLWIND TIER 4F
EFFECTIVE DATE: 01/01/2020
SUPERCEDES ALL PREVIOUS PRICE LISTS
DEALER PRICE LIST (U.S. DOLLARS)

QUANTITY	PART NUMBER	MODEL DESCRIPTION	2020 LIST PRICE	2020 EXTENDED
		----------PAINT----------		
0	4811018	PAINT SWEEPER ZINC YELLOW RAL 1018	$525.00	$0.00
0	4811023	PAINT SWEEPER TRAFFIC YELLOW RAL 1023	$525.00	$0.00
0	4811037	PAINT SWEEPER SUN YELLOW RAL 1037	$525.00	$0.00
0	4813020	PAINT SWEEPER TRAFFIC RED RAL 3020	$525.00	$0.00
0	SPECIAL	PAINT SWEEPER ANY OTHER RAL COLOR	1285.00	$0.00
0	SPECIAL	PAINT SWEEPER NON RAL COLOR	3890.00	$0.00
		------TOOL BOX/TOOL KIT---		
0	1053426	TOOL KIT	$790.00	$0.00
0	1057687	TOOL BOX W/TOOLS	$765.00	$0.00
		-----WANDERING HOSE-----		
0	1059263	4 FT. ALUMINUM WANDERING HOSE EXTENSION - REAR MOUNT	$810.00	$0.00
0	1063656	(2) 4 FT. ALUMINUM WANDERING HOSE EXTENSIONS - REAR MOUNT	$1,620.00	$0.00
0	1082041	WANDERING HOSE LIGHT DUTY SPRING ASSISTANCE **(8 YD ONLY)**	$3,580.00	$0.00
0	1121789	HYDRAULIC WANDERING HOSE - (USE W/DUAL SIDEBROOMS) **(8 YD ONLY)**	$5,000.00	$0.00
0	1121790	HYDRAULIC WANDERING HOSE - (USE W/SINGLE SIDEBROOM) **(8 YD ONLY)**	$5,000.00	$0.00
0	1121791	HYDRAULIC WANDERING HOSE (USE W/SINGLE SB & FRONT SPRAYBAR) **(8 YD ONLY)**	$5,000.00	$0.00
0	1121792	HYDRAULIC WANDERING HOSE (USE W/DUAL SB & VARIABLE SPEED) **(8 YD ONLY)**	$5,000.00	$0.00
0	1121793	HYDRAULIC WANDERING HOSE (USE SINGLE SB & VARIABLE SPEED) **(8 YD ONLY)**	$5,000.00	$0.00
0	1121794	HYDRAULIC WANDERING HOSE (USE W/SINGLE SB, VARIABLE SPEED & FRONT SPRAYBAR) **(8 YD ONLY)**	$5,000.00	$0.00
		------WATER SYSTEM--------		
0	1032484	25' WATER FILL HOSE (ILO 16' 8")	$205.00	$0.00
0	1036150	HYDRANT WRENCH	$100.00	$0.00
0	1040094	QUICK DISCONNECT WATER FILL	$530.00	$0.00
0	1059209	HOPPER DELUGE	$1,080.00	$0.00
0	1121913	LOW PRESSURE WASHDOWN	$1,285.00	$0.00
0	1121910	HIGH PRESSURE WASHDOWN - HIGH PSI AT LOW RPM	$4,305.00	$0.00
0	1121911	HIGH PRESSURE WASHDOWN (USE W/ PM10) - HIGH PSI AT LOW RPM	$4,185.00	$0.00
0	1121912	IIGH PRESSURE WASHDOWN (USE WITH WAND HOSE) - HIGH PSI AT LOW RPI	$4,305.00	$0.00
0	1120481	HIGH PRESSURE WASHDOWN (USE W/ WANDERING HOSE AND PM10) HIGH PSI AT LOW RPM	$4,305.00	$0.00
0	1091366	HIGH PRESSURE WASHDOWN HOSE REEL	$1,210.00	$0.00
0	1091367	HIGH PRESSURE WASHDOWN HOSE REEL (USE W/ RIGHT HAND INSPECTION DOOR)	$1,210.00	$0.00
		----M2 CHASSIS OPTIONS----		
0	1063734	CAB PAINT M2	$4,015.00	$0.00
0	1070639	LED/STOP/TAIL/REAR TURN LIGHTS	$665.00	$0.00
0	1075400	AM/FM RADIO WITH CD	$950.00	$0.00
0	1109607	12" CONVEX MIRRORS (IL0 8")	$340.00	$0.00
0	1080756	FENDER MOUNTED MIRROR-LEFT HAND	$585.00	$0.00
0	1081188	EXTRA KEY	$55.00	$0.00
0	1081901	SPARE TIRE & WHEEL, BALANCE	$1,325.00	$0.00
0	1121758	FRONT SPRAY BAR-SINGLE	$1,075.00	$0.00
0	1121759	FRONT SPRAY BAR-DUAL	$785.00	$0.00
0	1090653	DUAL AIR HORNS	$1,665.00	$0.00
0	1122080	AUTO LUBE SWEEPER/TRUCK	$7,725.00	$0.00
0	1092336	(2) ALUMINUM EXTENSIONS FRONT MOUNTED	$1,420.00	$0.00
0	1121162	WIRE/MOUNT CAB/FRONT ; HOPPER/REAR	$1,005.00	$0.00
0	1121163	WIRE/MOUNT - CAB/FRONT ; HOPPER/REAR W/GUARD	$1,495.00	$0.00
0	1121164	LED BEACON CAB/FRONT ; HOPPER/REAR	$2,450.00	$0.00
0	1121494	LED BEACON CAB/FRONT ; HOPPER/REAR (USE W/AIR HORN)	$2,450.00	$0.00
0	1118356	2 1/2 LB. FIRE EXTINGUISHER	$230.00	$0.00
0	1118357	5 LB. FIRE EXTINGUISHER	$245.00	$0.00
0	1121926	FRONT SPRAY BAR (USE W/PM10)	$785.00	$0.00
0	1121736	CAB & (2) REAR BEACONS (USE W/ WANDERING HOSE)	$2,150.00	$0.00
0	1121737	CAB & (2) REAR BEACONS (USE W/WANDERING HOSE & AIR HORN)	$2,150.00	$0.00
0	1121738	CAB & (2) REAR BEACONS (USE W/O WANDERING HOSE)	$2,150.00	$0.00
0	1121739	CAB & (2) REAR BEACONS (USE W/O WANDERING HOSE & AIR HORN)	$2,150.00	$0.00
0	1121903	LED BEACONS CAB/FRONT ; HOPPER/REAR W/ LED ARROWBOARD	$4,070.00	$0.00

MODEL: WHIRLWIND TIER 4F
EFFECTIVE DATE: 01/01/2020
SUPERCEDES ALL PREVIOUS PRICE LISTS
DEALER PRICE LIST (U.S. DOLLARS)

QUANTITY	PART NUMBER	MODEL DESCRIPTION	2020 LIST PRICE	2020 EXTENDED
		----PETERBILT CHASSIS OPTIONS----		
0	1121577	SPARE CHASSIS KEY	$140.00	$0.00
0	1121762	FRONT SPRAYBAR (USE W/SINGLE SIDEBROOM)	$1,075.00	$0.00
0	1121763	FRONT SPRAYBAR (USE W/DUAL SIDEBROOMS)	$785.00	$0.00
0	1122901	FRONT SPRAYBAR (USE W/PM-10)	$785.00	$0.00
0	1122155	LED STOP, TAIL, TURN LIGHTS	$675.00	$0.00
0	1123158	2 1/2 LB. FIRE EXTINGUISHER	$230.00	$0.00
0	1123159	5 LB. FIRE EXTINGUISHER	$260.00	$0.00
		---- INTERNATIONAL CHASSIS OPTIONS----		
0	1117228	2 1/2 LB. FIRE EXTINGUISHER	$230.00	$0.00
0	1117229	5 LB. FIRE EXTINGUISHER	$255.00	$0.00
0	1063731	CAB PAINT	$3,865.00	$0.00
0	1070639	LED/STOP/TAIL/REAR TURN LIGHTS	$665.00	$0.00
0	1121758	FRONT SPRAY BAR-SINGLE	$1,075.00	$0.00
0	1121759	FRONT SPRAY BAR-DUAL	$785.00	$0.00
0	1086733	LEFT HAND FENDER MOUNTED MIRROR	$540.00	$0.00
0	1121926	FRONT SPRAY BAR (USE W/ PM-10)	$785.00	$0.00
0	1091761	EXTRA KEY	$70.00	$0.00
0	1091770	(2) ELECTRIC & (1) AIR HORN	$1,990.00	$0.00
0	1121178	BEACON CAB/FRONT;(2) HOPPER/REAR LED BEACONS (USE W/O WANDERING HOSE)	$2,755.00	$0.00
0	1092464	4 FT. ALUMINUM WANDERING HOSE EXTENSION - FRONT MOUNT	$995.00	$0.00
0	1097641	NATIONAL AIR RIDE SEAT - PASSENGER SIDE (RIGHT HAND) VINYL	$2,475.00	$0.00
0	1097643	NATIONAL AIR RIDE SEAT- PASSENGER SIDE (RIGHT HAND) CLOTH	$2,340.00	$0.00
0	1097644	NATIONAL AIR RIDE SEAT- PASSENGER SIDE (RIGHT HAND) CLOTH W/ARM REST	$2,490.00	$0.00
0	1097645	NATIONAL AIR RIDE SEAT - DRIVER SIDE (LEFT HAND) VINYL	$2,200.00	$0.00
0	1097647	NATIONAL AIR RIDE SEAT - DRIVER SIDE (LEFT HAND) CLOTH	$2,340.00	$0.00
0	1097648	NATIONAL AIR RIDE SEAT - DRIVER SIDE (LEFT HAND) CLOTH W/ARM REST	$2,685.00	$0.00
0	1099317	(1) ELECTRIC HORN	$415.00	$0.00
0	1121892	LED BEACON CAB/FRONT ; HOPPER/REAR WITH LED ARROWBOARD	$4,070.00	$0.00
		-------FREIGHT RATES-------		
0	FRT-120-001	SELF SHIPPING DOCK CHARGE	$595.00	$0.00
0	FRT-120-002	FREIGHT-IL,WI,IA,IN,MI,MN,KY	$1,310.00	$0.00
0	FRT-120-003	FREIGHT-TN,WV,PA,NY	$2,850.00	$0.00
0	FRT-120-004	FREIGHT-NH,VT,ME	$3,555.00	$0.00
0	FRT-120-005	FREIGHT-NEW YORK CITY	$4,110.00	$0.00
0	FRT-120-006	FREIGHT-ND,SD,NE,OK,KS,AR,AL,MO	$2,715.00	$0.00
0	FRT-120-007	FREIGHT-AZ,UT	$5,390.00	$0.00
0	FRT-120-008	FREIGHT-CA,NV,ID,OR,WA	$6,355.00	$0.00
0	FRT-120-009	FREIGHT- CHICAGO/MILWAUKEE	$900.00	$0.00
0	FRT-120-010	FREIGHT-FL,LA,TX,NM,CO,WY,MT	$4,145.00	$0.00
0	FRT-120-011	FREIGHT-OH,ST.LOUIS METRO	$1,530.00	$0.00
0	FRT-120-012	FREIGHT,MS,GA,SC,NC,VA,MD	$3,130.00	$0.00
0	FRT-120-013	FREIGHT - RI,DE,CT,NJ,MA	$2,740.00	$0.00
0	FRT-120-014	FREIGHT - LAREDO, TX	$6,700.00	$0.00
0	FRT-120-015	SPECIALIZED TRANSPORT EQUIPMENT	$1,030.00	$0.00
		----------WARRANTY--------		
0	EW-AIR-NA-2PL	WHIRLWIND 2ND YEAR PARTS/LABOR	$2,766.00	$0.00
0	EW-AIR-NA-3PL	WHIRLWIND 3RD YEAR PARTS/LABOR	$4,207.00	$0.00
0	EW-AIR-NA-4PL	WHIRLWIND 4TH YEAR PARTS/LABOR	$6,420.00	$0.00
0	EW-AIR-NA-5PL	WHIRLWIND 5TH YEAR PARTS/LABOR	$8,749.00	$0.00
			SUB TOTAL	**$0.00**
		-----DISCOUNTS-----		
0	DISC-120-ADDL	ADDITIONAL DISCOUNT	$0.00	$0.00
0	DISC-120-PROMO	PROMO DISCOUNT	$0.00	$0.00
		SPECIAL RFQ OPTIONS / OTHER DESCRIPTIONS		
			GRAND TOTAL	**$0.00**

MODEL: MEGAWIND COMBO VACUUM T4
EFFECTIVE DATE: 01/01/2020
SUPERCEDES ALL PREVIOUS PRICE LISTS
DEALER PRICE LIST (U.S. DOLLARS)

Purchase Order #	**Ship To Address:**
Order Date:	
Delivery Date Requirment If Any:	**State Penalty Clause If Applicable:**

QUANTITY	PART NUMBER	MODEL DESCRIPTION	2020 LIST PRICE	2020 EXTENDED
		TIER 4		
0	1123368	**MEGAWIND 10 YARD HOPPER TIER 4 (CATCH BASIN ONLY)**	**$167,125**	$0.00
0	1123369	**MEGAWIND 10 YARD HOPPER SINGLE SIDEBROOM TIER 4**	**$193,000**	$0.00
0	1123370	**MEGAWIND 10 YARD HOPPER DUAL SIDEBROOM TIER 4**	**$209,605**	$0.00
		Tier IIII emissions, 10 cu. yd hopper, 36 in. (711 mm) trailing arm side broom on right hand side (SINGLE) and on both sides (DUAL), 12 inch, rear mounted vacuum hose with hydraulically operated, double articulated boom with wired pendant control, ergonomic control console, sweeper is powder coated from powder coatings chart 2003/N with powder coated gray undercarriage and including the standard features listed below.		
0	1123371	**MEGAWIND 13 YARD HOPPER TIER 4 (CATCH BASIN ONLY)**	**$173,625**	$0.00
0	1123372	**MEGAWIND 13 YARD HOPPER SINGLE SIDEBROOM TIER 4**	**$199,625**	$0.00
0	1123373	**MEGAWIND 13 YARD HOPPER DUAL SIDEBROOM TIER 4**	**$217,500**	$0.00
		Tier IIII emissions, 13 cu. yd hopper, 36 in. (711 mm) trailing arm side broom on right hand side (SINGLE) and on both sides (DUAL), 12 inch, rear mounted vacuum hose with hydraulically operated, double articulated boom with wired pendant control, ergonomic control console, sweeper is powder coated from powder coatings chart 2003/N with powder coated gray undercarriage and including the standard features listed below.		
		-----CHASSIS-----		
		10 YARD HOPPER		
0	SPECIAL	M2 196" WB - GVWR 33,000 (NON STOCKED CHASSIS)	CONTACT INSIDE SALES	$0.00
		13 YARD HOPPER		
0	SPECIAL	M2 196" WB - GVWR 38,000 (2010 EMISSIONS) LIMITED QTY	CONTACT INSIDE SALES	$0.00
		-----CHASSIS MOUNTING CHARGE-----		
0	SPECIAL	M2 196" WB - ALTERATIONS (USE W/CATCH BASIN ONLY)	$2,680	$0.00
0	SPECIAL	M2 196" WB - ALTERATIONS (USE W/DUAL SWEER GEAR)	$2,680	$0.00
0	SPECIAL	M2 196" WB - ATLERATIONS (USE W/SINGLE SWEER GEAR)	$2,680	$0.00
1	4820001	PAINT CAB STANDARD WHITE	N/C	$0.00
1	4810001	PAINT SWEEPER STANDARD WHITE	N/C	$0.00
0	SPECIAL	SWEEPER COLOR OTHER THAN STANDARD WHITE	SEE INSIDE SALES	$0.00

NOTE: A BODY includes the cost of Elgin standard white finish paint. It does not however, include the price of the chassis.

NOTE: One year warranty on all Elgin supplied parts and labor. Consult your Elgin dealer for full warranty details.

MODEL: MEGAWIND COMBO VACUUM T4
EFFECTIVE DATE: 01/01/2020
SUPERCEDES ALL PREVIOUS PRICE LISTS
DEALER PRICE LIST (U.S. DOLLARS)

QUANTITY	PART NUMBER	MODEL DESCRIPTION	2020 LIST PRICE	2020 EXTENDED

STANDARD FEATURES

(Applies to the 10 Yard Hopper and 13 Yard Hopper)

1	0701417	MEGAWIND OPERATORS	STANDARD	$0.00
1	0702259	MEGAWIND PARTS	STANDARD	$0.00
1	0704046	JD 4045HF TR4 OPERATORS MANUAL	STANDARD	$0.00
1	0704047	JD 4045HF TR4 PARTS BOOK	STANDARD	$0.00
1	701705	MACHINE DELIVERY PACKET	STANDARD	$0.00
1	1032481	FILL HOSE, 16'8" WITH STRAINER AND COUPLING	STANDARD	$0.00
1	730166	BROOM MEASUREMENT RULER	STANDARD	$0.00

Alternator, 120 amp.
Auxiliary engine:
  John Deere 4045TFC03, 4 cylinder Turbocharged diesel
  Horsepower: 74 HP (55 kW) at 2400 RPM
  Displacement: 276 cu. in. (4.5 L)
Anti-Siphon fill
Auto Shutdown Auxiliary Engine
Backup alarm, electric
Camera, Rear View

Control console with rocker switches for all hopper functions and sweep functions (if so equipped), including memory sweep in an ergonomically designed console with full gauge package including diagnostic gauge, tachometer, engine hour meter, oil pressure indicator, coolant temperature, voltmeter and fuel level indicator, auxiliary engine RPM control, side broom down pressure controls, manual reset circuit breakers, water level gauge and warning lights for hopper "up", hopper rear door "open" and hopper "full"

Doors, fiberglass access doors provide easy service and maintenance on auxiliary engine, hydraulic and electrical system
Drive: Fluid coupling blower drive with power belt
Electronic Throttle
Hopper rear door, hydraulically opened/closed and locked/unlocked with external controls
Fuel tank, 50 gallon (189 L)
Fuel water separator for aux engine
Hydraulic oil cooler
Hydraulically controlled, double articulated boom
Hopper debris level indicator
In cab hopper dump
LED clearance lights
Spray wand
Water tank, 335 gallons
12” vacuum hose
23 GPM, triple diaphragm jetter pump

MODEL: MEGAWIND COMBO VACUUM T4
EFFECTIVE DATE: 01/01/2020
SUPERCEDES ALL PREVIOUS PRICE LISTS
DEALER PRICE LIST (U.S. DOLLARS)

QUANTITY	PART NUMBER	MODEL DESCRIPTION	2020 LIST PRICE	2020 EXTENDED
		-----ADDITIONAL MANUALS----		
0	704046	JD 4045HF TR4 OPERATORS MANUAL	$55.00	$0.00
0	704047	JD 4045HF TR4 PARTS BOOK	$110.00	$0.00
0	704048	JD 4045HF TR4 TECH MANUAL	$190.00	$0.00
0	701417	MEGAWIND OPERATORS	$55.00	$0.00
0	702259	MEGAWIND PARTS	$90.00	$0.00
0	702471	MEGAWIND SERVICE	$95.00	$0.00
		----------ALARM---------		
0	1122644	BACK UP ALARM - PRECO	$290.00	$0.00
0	1048703	BACK UP ALARM - SMART	$450.00	$0.00
		---------AUTO LUBE--------		
0	1124198	AUTO LUBE - SWEEPER	$6,190.00	$0.00
		------AUX ENGINE----------		
0	1120793	TURBO II PRECLEANER	$510.00	$0.00
0	1121842	SYKLONE PRECLEANER	$635.00	$0.00
0	1078204	AUXILIARY AIR FILTER RESTRICTION INDICATOR LIGHT	$665.00	$0.00
0	1122461	BATTERY DISCONNECT	$540.00	$0.00
0	1122987	COLD WEATHER STARTING KIT	$515.00	$0.00
0	1121729	BLOCK HEATER	$475.00	$0.00
		----------DECALS---------		
0	1094405	RED LOGO-MEGAWIND	$0.00	$0.00
0	1096267	WHITE LOGO-MEGAWIND	$0.00	$0.00
0	1122929	SHIP DECALS AND SWOOSH LOOSE IN HOPPER	$0.00	$0.00
		----------HOPPER----------		
		10 YARD		
0	1105204	SS HOPPER SCREEN	$1,945.00	$0.00
0	1097562	LIFELINER HOPPER SYSTEM W/WARRANTY	$10,105.00	$0.00
0	1085864	RIGHT HAND INSPECTION DOOR	$465.00	$0.00
0	1085882	LEFT HAND INSPECTION DOOR	$465.00	$0.00
0	1085883	RIGHT HAND INSPECTION DOOR & STEP	$825.00	$0.00
0	SPECIAL	LEFT HAND INSPECTION DOOR & STEP	$825.00	$0.00
0	1094441	6" HOPPER DRAIN	$860.00	$0.00
		13 YARD		
0	1098519	6" HOPPER DRAIN	$1,155.00	$0.00
		----------LIGHTS---------		
0	1124117	REAR ARROWBOARD LED	$2,780.00	$0.00
0	1124119	LED REAR HOPPER BEACON/ & GUARD WITH LED ARROWBOARD	$3,190.00	$0.00
		----------PAINT---------		
0	4811018	PAINT SWEEPER ZINC YELLOW RAL 1018	$525.00	$0.00
0	4811023	PAINT SWEEPER TRAFFIC YELLOW RAL 1023	$525.00	$0.00
0	4811037	PAINT SWEEPER SUN YELLOW RAL 1037	$525.00	$0.00
0	4813020	PAINT SWEEPER TRAFFIC RED RAL 3020	$525.00	$0.00
0	SPECIAL	PAINT SWEEPER ANY OTHER RAL COLOR	$1,265.00	$0.00
0	SPECIAL	PAINT SWEEPER NON RAL COLOR	$3,830.00	$0.00

MODEL: MEGAWIND COMBO VACUUM T4
EFFECTIVE DATE: 01/01/2020
SUPERCEDES ALL PREVIOUS PRICE LISTS
DEALER PRICE LIST (U.S. DOLLARS)

QUANTITY	PART NUMBER	MODEL DESCRIPTION	2020 LIST PRICE	2020 EXTENDED
		----------SAFETY----------		
0	1048643	SLOW MOVING VEHICLE SIGN **(10 YARD HOPPER ONLY)**	$170.00	$0.00
0	SPECIAL	REMOVE REAR CAMERA (10 YARD ONLY)	N/C	$0.00
0	SPECIAL	REMOVE REAR CAMERA (13 YARD ONLY)	N/C	$0.00
		----SIDE BROOM OPTIONS----		
0	1123813	SIDEBROOM TILT LEFT HAND	$1,010.00	$0.00
0	1123812	SIDEBROOM TILT RIGHT HAND	$1,010.00	$0.00
		-------SWEEPER OPTIONS----		
0	1079679	AIR PURGE	$445.00	$0.00
0	1124236	AUTO SHUTTER LEFT HAND	$1,315.00	$0.00
0	1124237	AUTO SHUTTER RIGHT HAND	$1,315.00	$0.00
0	1124238	DUAL SHUTTER RIGHT HAND	$1,465.00	$0.00
		------TOOL BOX/TOOL KIT---		
0	1057687	TOOL BOX W/TOOLS	$765.00	$0.00
		------WATER SYSTEM--------		
0	1036150	HYDRANT WRENCH	$100.00	$0.00
0	1032484	25' WATER FILL HOSE (ILO 16' 8")	$205.00	$0.00
0	1040094	QUICK DISCONNECT WATER FILL (STANDARD W/HOPPER DELUGE)	$530.00	$0.00
0	1059209	HOPPER DELUGE	$1,080.00	$0.00
0	1095701	HOSE REEL for MEDIUM PRESSURE WASHDOWN	$1,245.00	$0.00
0	1122992	HIGH PRESSURE WASHDOWN **(ILO STD JETTER PUMP)**	$2,010.00	$0.00
0	1122713	HOSE REEL FOR HIGH PRESSURE WASHDOWN	$1,210.00	$0.00
0	1122714	HOSE REEL FOR HIGH PRESSURE WASHDOWN (USE W/INSPECTION DOOR)	$1,225.00	$0.00
0	1096051	CATCH BASIN SPRAY WAND, 4' SOILD STREAM (NOT COMPATIABLE WITH HIGH PRESSURE WASHDOWN)	$250.00	$0.00
0	1096053	CATCH BASIN SPRAY WAND, 2' ADJUSTABLE STREAM (NOT COMPATIABLE WITH HIGH PRESSURE WASHDOWN)	$335.00	$0.00
		-----WANDERING HOSE EXTENSIONS-----		
0	1096358	REAR MOUNTED CATCH BASIN EXTENSION 12" DIAMETER	$1,025.00	$0.00
0	1096563	REAR MOUNTED CATCH BASIN EXTENSION 10" DIAMETER	$910.00	$0.00
0	1096564	FLANGE REDUCER 10" TO 8" DIAMETER	$135.00	$0.00
0	1096565	FLANGE REDUCER 12" TO 10" DIAMETER	$230.00	$0.00
		-----M2 CHASSIS OPTIONS-----		
0	1070639	LED STOP/TURN/TAIL	$665.00	$0.00
0	1081188	EXTRA KEY	$55.00	$0.00
0	1081901	SPARE TIRE/WHEEL	$1,325.00	$0.00
0	1086636	FRONT SPRAY BAR - SINGLE	$1,070.00	$0.00
0	1086637	FRONT SPRAY BAR - DUAL	$785.00	$0.00
0	1123761	AUXILIARY HYDRAULIC PUMP	$1,440.00	$0.00
0	1090653	HORN-AIR, DUAL	$1,665.00	$0.00

MODEL: MEGAWIND COMBO VACUUM T4
EFFECTIVE DATE: 01/01/2020
SUPERCEDES ALL PREVIOUS PRICE LISTS
DEALER PRICE LIST (U.S. DOLLARS)

QUANTITY	PART NUMBER	MODEL DESCRIPTION	2020 LIST PRICE	2020 EXTENDED
		-----M2 CHASSIS OPTIONS CONTINUED-----		
0	1124199	AUTO LUBE SWEEPER/TRUCK	$7,725.00	$0.00
0	1093019	2 1/2 LB. FIRE EXTINGUISHER	$230.00	$0.00
0	1093020	5 LB. FIRE EXTINGUISHER	$260.00	$0.00
		----------WARRANTY--------		
0	EW-AIR-NA-2PL	MEGAWIND 2ND YEAR PARTS/LABOR	$2,766.00	$0.00
0	EW-AIR-NA-3PL	MEGAWIND 3RD YEAR PARTS/LABOR	$4,207.00	$0.00
0	EW-AIR-NA-4PL	MEGAWIND 4TH YEAR PARTS/LABOR	$6,420.00	$0.00
0	EW-AIR-NA-5PL	MEGAWIND 5TH YEAR PARTS/LABOR	$8,749.00	$0.00
		-------FREIGHT RATES-------		
		NOTE: SPECIALIZED TRANSPORT EQUIPMENT IS REQUIRED FOR 10 YARD MEGAWIND. 13 YARD IS DRIVE AWAY ONLY		
0	FRT-123-001	SELF SHIPPING DOCK CHARGE	$595.00	$0.00
0	FRT-123-002	FREIGHT-IL,WI,IA,IN,MI,MN,KY	$1,310.00	$0.00
0	FRT-123-003	FREIGHT-TN,WV,PA,NY	$2,850.00	$0.00
0	FRT-123-004	FREIGHT-NH,VT,ME	$3,595.00	$0.00
0	FRT-123-005	FREIGHT-NEW YORK CITY	$4,110.00	$0.00
0	FRT-123-006	FREIGHT-ND,SD,NE,OK,KS,AR,AL,MO	$2,715.00	$0.00
0	FRT-123-007	FREIGHT-AZ,UT	$5,445.00	$0.00
0	FRT-123-008	FREIGHT-CA,NV,ID,OR,WA	$6,355.00	$0.00
0	FRT-123-009	FREIGHT- CHICAGO/MILWAUKEE	$900.00	$0.00
0	FRT-123-010	FREIGHT-FL,LA,TX,NM,CO,WY,MT	$4,145.00	$0.00
0	FRT-123-011	FREIGHT-OH,ST.LOUIS METRO	$1,530.00	$0.00
0	FRT-123-012	FREIGHT,MS,GA,SC,NC,VA,MD	$3,130.00	$0.00
0	FRT-123-013	FREIGHT - RI,DE,CT,NJ,MA	$2,740.00	$0.00
0	FRT-123-014	FREIGHT - LAREDO, TX	$6,700.00	$0.00
0	FRT-123-015	SPECIALIZED TRANSPORT EQUIPMENT	$1,030.00	$0.00
			SUB TOTAL	$0.00
		-----DISCOUNTS-----		
0	DISC-120-ADDL	ADDITIONAL DISCOUNT	$0.00	$0.00
0	DISC-120-PROMO	PROMO DISCOUNT	$0.00	$0.00

SPECIAL RFQ OPTIONS / OTHER DESCRIPTIONS

GRAND TOTAL	$0.00

RegenX Price Sheet - 12/4/19

Elgin RegenX	List Price	Part Number
Tier 4F emissions, John Deere 4045 turbocharged diesel engine, 8 cu. yard tilting hopper w/ 50 degree dump angle, right and left side brooms, sweeper powdercoated from powder coatings chart 2003/N with powder coated gray undercarriage and includes the standard features listed below	$ 120,250.00	REGENX-RM 1130001
Alts-Freightliner M2 Chassis	Contact Inside Sales	1130040
Freightliner M2 Chassis 2020 106 WB=176	Contact Inside Sales	1132032
Customer Supplied Chassis Handling Charge	Contact Inside Sales	SPECIAL

Standard Features

Description
Parts Manual
Operators Manual
John Deere Operators Manual
John Deere Parts
Broom measurement ruler
16' 8" Water fill hose
Machine delivery packet
Elgin safety manual
Auto Shutdown, Aux. Engine: low oil pressure, high coolant temp, hydraulic oil level, fuel temp, intake manifold air temp, water-in-fuel, very high soot loading.
Backup Alarm, electric
Brooms, hydraulic rotation
Brooms, Dual
Camera, rear mounted
Console, w/rocker switches for all sweep functions
Full gauge package including tachometer, engine hour meter, oil pressure indicator and coolant temperature. Engine speed control, side broom down pressure controls and automotive style blade fuses. Standard indicators for full load, screen down, and hydraulic oil level indicator lamps. Optional indicator lamps for hopper up, door open, hydraulic oil temp.
Sweep resume/sweep transport/reverse pick-up
Fuel Water Separator on Aux Engine
Hopper rear door, hydraulically opened/closed and locked/unlocked w/ external manual controls
Hose, hydrant fill, 16'8" (5080 mm) with coupling
LED Clearance Lights
Lights; rear clearance and rear identification
Right hand 8" convex mirror
Pick-up head, hydraulically operated, 14” (355 mm) outside diameter pressure hose, 13” (324mm) inside diameter suction hose with quick disconnect on suctions side
Water system; one (1) rocker switch with HI / LOW setting, Spray nozzles: three (3) in the suction, nozzle, three (3) at each side broom
Side Broom Outer Position Stop
Hydraulic Oil Cooler
Vacuum enhancer, cable-controlled in cab, 5 settings
Water tank, molded polyethylene, 250 gallons
Water pre-filter, hydrant fill hose
FUNCTIONAL CONTROL OF WATER SYSTEM dispenses water with the use of the sweeper function rocker switch. Water to pickup head on when water is turned on, water to side brooms on when brooms are deployed.
ANTI SIPHON 2-1/2" AIR GAP
Bolt-on 2 ply rubber fan housing liner

Optional Features

Description	List Price	Part Number
JOHN DEERE SERVICE MANUAL	$ 190.00	704048
REGENX SERVICE MANUAL	$ 95.00	702472
IN-CAB RIGHT HAND GUTTER BROOM TILT - NO DISPLAY	$ 680.00	1131223
IN-CAB LEFT HAND GUTTER BROOM TILT - NO DISPLAY	$ 680.00	1131222
***DUAL SIDE BROOM SCRUBBING POSITION provides additional switch on console to allow the side brooms to sweep inboard in front of the pickup head in the scrubbing position.	$ 1,240.00	1132709
***IN-CAB HOPPER DUMP	$ 1,275.00	1130055
HYDRAULIC OIL LEVEL GAUGE W/THERMOMETER (not in cab)	$ 195.00	1061886
HYDRAULIC OIL TEMPERATURE SHUTDOWN W/INDICATOR	$ 180.00	1133498
RIGHT HAND INSPECTION DOOR	$ 455.00	1130042
STAINLESS STEEL RIGHT HAND INSPECTION DOOR	$ 480.00	1130061
6" HOPPER DRAIN	$ 905.00	1130062
STAINLESS STEEL HOPPER SCREENS	$ 3,530.00	SPECIAL
STAINLESS STEEL HOPPER DOOR WITH HOPPER DELUGE	$ 1,060.00	1132891
LIFELINER HOPPER SYSTEM W/WARRANTY	$ 8,175.00	1130056
STAINLESS STEEL- HOPPER W/WARRANTY	$ 17,295.00	SPECIAL
STAINLESS STEEL- HOPPER W/W" HOPPER DRAIN /WARRANTY	$ 18,570.00	SPECIAL
PAINT SWEEPER YELLOW RAL 1018	$ 525.00	4811018
PAINT SWEEPER YELLOW RAL 1023	$ 525.00	4811023
PAINT SWEEPER YELLOW RAL 1037	$ 525.00	4811037
PAINT SWEEPER TRAFFIC RED RAL 3020	$ 525.00	4813020
PAINT SWEEPER OTHER RAL THAN ABOVE	$ 1,285.00	SPECIAL
PAINT SWEEPER NON RAL COLOR	$ 3,890.00	SPECIAL
WHITE LOGO/REGENX	$0.00	1132630
SLOW MOVING VEHICLE SIGN	$ 165.00	1130779
HYDRAULIC JACK, 5 TON	$ 275.00	5007219
TRIANGLE REFLECTOR FLARES (3)	$ 90.00	9306848
LEFT HAND SIDE CAMERA	$ 610.00	1095548
TURBO II PRECLEANER	$ 510.00	1120793
ADDITIONAL IGNITION KEY - AUX ENGINE	$ 50.00	6063004
AUXILIARY HYDRAULIC PUMP **USE WITHOUT** IN-CAB HOPPER DUMP	$ 1,205.00	1131235
AUXILIARY HYDRAULIC PUMP USE **WITH** IN-CAB HOPPER DUMP	$ 1,225.00	1131236
HYDRANT WRENCH	$ 100.00	1036150
LEFT HAND TOOLBOX	$ 875.00	1130043
RIGHT HAND TOOLBOX	$ 750.00	1130044
25' WATER FILL HOSE (ILO 16' 8")	$ 205.00	1032484
QUICK DISCONNECT WATER FILL	$ 530.00	1040094
HOPPER DELUGE	$ 1,060.00	1130776
PM-10 WATER SYSTEM	$ 2,825.00	1132945
PM-10 WATER SYSTEM (USE WITH SS HOPPER)	$ 2,825.00	1133131
CENTERBROOM	$ 3,870.00	1132876
VARIABLE SPEED - DUAL SIDEBROOMS	$ 895.00	1132957
FLOW BLOCKER	$ 2,410.00	1132168
HYDRAULIC WANDERING HOSE	$ 5,000.00	SPECIAL
HIGH PRESSURE WASHDOWN	$ 4,305.00	SPECIAL
PICKUP HEAD CAMERA	$ 460.00	1132583
IDLE DOWN NO WATER	$ 395.00	1131725
BROOM HOURS	$ 115.00	1131286

Lighting Options	List Price	Part Number
LED BEACON FRONT AND REAR AND LED ARROWSTICK	$ 1,370.00	1130049
LED BEACON FRONT AND REAR	$ 750.00	1130773
LED ARROWSTICK	$ 620.00	1130774
2 REAR LED BEACON & FRONT BEACON	$ 1,340.00	1133170
2 REAR LED BEACON & ARROWSTICK & FRONT BEACON	$ 1,960.00	1133172
LED/STOP/TURN/TAIL LIGHTS	$ 665.00	1070639
LED SIDE BROOM LIGHTS	$ 495.00	1130046
WIRE MOUNT FRONT/REAR WITH GUARD	$ 600.00	1133077
WIRE MOUNT FRONT/REAR LED ARROWSTICK	$ 1,095.00	1133078
WIRE MOUNT 2 REAR LED BEACON AND FRONT BEACON	$ 1,070.00	1133171
WIRE MOUNT 2 REAR LED BEACON & FRONT BEACON & ARROWSTICK	$ 1,570.00	1133173
SB & RR FLOOD LIGHTS	$ 630.00	1132252

Chassis Options (*Some optional features are standard on other Elgin offerings)	List Price	Part Number
M2 PARTS BOOK	$ 410.00	704005
M2 OPERATOR BOOK	$ 55.00	704006
M2 SERVICE MANUAL	$ 335.00	704007
CAB PAINT	$ 3,955.00	1063734
PAINT TRUCK RIMS	$ 1,225.00	1071626
LEFT HAND FENDER MOUNTED MIRROR	$ 575.00	1080756
12" CONVEX MIRRORS	$ 335.00	1109607
EXTRA KEY - M2 CHASSIS	$ 50.00	1081188
(2) BOSTROM 905 VINYL MID-BACK	$ 1,905.00	1081745
(1) BOSTROM 905 VINYL MID-BACK	$ 935.00	1081746
(1) LH BOSTROM AIR 905 CLOTH HI-BACK*	$ 1,090.00	1081748
SPARE TIRE & WHEEL , BALANCED	$ 1,305.00	1081901
SINGLE ARM REST - VINYL **(ONLY W/AIR RIDE SEATS)**	$ 380.00	1081909
DUAL ARM REST - VINYL **(ONLY W/AIR RIDE SEATS)**	$ 715.00	1081910
SINGLE ARM REST - CLOTH **(ONLY W/AIR RIDE SEATS)**	$ 380.00	1081911
DUAL ARM REST - CLOTH **(ONLY W/AIR RIDE SEATS)**	$ 715.00	1081912
AIR RESTRICTOR GAUGE - LIGHT IN CAB	$ 875.00	1081365
FRONT SPRAY BAR	$ 745.00	1130047
2 1/2 LB. FIRE EXTINGUISHER	$ 225.00	1118356
5 LB. FIRE EXTINGUISHER	$ 240.00	1118357
BATTERY DISCONNECT SWITCH (Chassis)	$ 1,605.00	1123271
FRONT SPRAY BAR PM-10	$ 745.00	1133102
CHASSIS AUTO LUBE	$ 4,030.00	1133133
AIR FILTER CAB LT	$ 875.00	1081365
DUAL TILT STEERING COLUMNS*	$ 825.00	SPECIAL
POWER LOCKS & WINDOWS*	$ 415.00	SPECIAL

HEIL

a DOVER company

WE NEVER STOP WORKING FOR YOU

2020 Heil MSRP Price Guide

Effective December 1st, 2019

Environmental Solutions Group

A DOVER COMPANY

Copyright 2019, Heil Environmental

This entire document (and any attachments) are confidential and only for the intended recipient(s). Use or distribution by any unintended recipient is prohibited. If you have received this document in error, delete this entire communication, and notify the sender you have done so.

COMMERCIAL FRONT LOADERS

Half/Pack® 3-7

Half/Pack® Sierra 8-12

Half/Pack® Freedom 13-17

Half/Pack® 31-34
Featuring Odyssey™ controls

Half/Pack Sierra 35-38
Featuring Odyssey™ controls

Half/Pack Freedom 39-42
Featuring Odyssey™ controls

RESIDENTIAL FRONT LOADERS

Half/Pack® 18-22
Featuring Odyssey™ controls

Half/Pack® Sierra 23-26
Featuring Odyssey™

Half/Pack® Freedom 27-30
Featuring Odyssey™ controls

LOWRIDER COMMERICAL

Half/Pack® LowRider ™ 43-47
Commercial

LOWRIDER RESIDENTIAL

Half/Pack® LowRider™48-52
Residential

REAR LOADERS

PT 1000™ 53-56

DuraPack® 5000 57-60

PowerTrak® Commercial 61-64

PowerTrak® Commercial Plus 65-68

MULTI-COMPARMENT VEHICLES

DuraPack® 40 60 Split Body 93-96

AUTOMATED SIDE LOADERS

DuraPack® Rapid Rail 69-72

DuraPack® Python® 73-76

Liberty 77-80

MultiPack ® 81-84

Rapid Rail ® 85-88

Commander™ 89-92

RESOURCES

Bayne cart lifters and carry cans.....97

Terms and conditions.....99

Warranty policy.....100

Sales order cover page.....101

Training, Rdy Trk and Chassis mods.98

Half/Pack®

High-Compaction Front Loader

Standard Equipment Features included in Base Price

- Steel Sliding Top Door
- Hinged and completely sealed left-side body access door to include step and grab handles
- Cab shield with hinged rubber tip extension - Steel
- Front head closure screen
- Body service props
- Tailgate service props
- Fully automatic Shur-lock tailgate latches
- Clamp on arms
- 8,000 Watec WRP 06-1996 rated arms
- Four Arm shaft bearing blocks
- Fork Cross shaft rubber bumpers
- Bolt-on rubber arm stops
- Heavy-duty forks - 1 1/2” thick x 59” length
- Front Mount single vane pump
- Cross pattern packing cylinders
- Chassis frame mounted oil tank with sight gauge and shut off valve
- 3-micron return line filter with magnetic trap and in-cab filter bypass monitor
- 100- micron suction line strainer
- Abrasion resistant hoses
- Cortex Controller with insight diagnostic display with integrated 3rd Eye camera feed
- Throttle Advance/Limit
- Joystick in-cab air controls
- Complete array of in-cab function indicator lights on in cab display
- 5 lb. in-cab fire extinguisher
- Tailgate lock and closed indicator sensor with in-cab indicator and alarm
- ANSI Z 245.1-2017 Compliant
- Safety triangle kit in cab
- Cavity & Joint sealer
- Arm Hydraulic Tube Covers
- Remote I/O for Tailgate valve
- Streetwise Hydraulics ™
- Arm rest for operator controls
- Backup Alarm
- Backup and license plate light
- LED center-mounted brake light
- LED duplicate high and low mount stop, turn, and tail lights
- LED mid-body turn signals
- Strobe light (Amber) mounted on lower tailgate- to include in cab switch, pump on and reverse activated
- Front and Rear Mud Flaps
- Rear Under ride bumper
- Hopper Flood Light
- Shovel Kit mounted back of packer
- Low oil level sensor to include light and buzzer warning as well as pump shut off
- Severe-duty wear bars
- 3” underbody gate valve on street side
- Remote packer lube
- Greaseless tailgate hinge and lift cylinders
- Hydraulic oil temperature sensor with alarm
- Body hydraulic pressure sensor
- Arm / Fork over height warning kit
- 20 Lb. Fire extinguisher
- MVSS #108 clearance light and reflectors
- ICC reflective tape
- Rear camera bracket and flood lights - reverse activated
- Body Undercoating
- Customers Choice of one color paint finish
- Standard 1-year warranty (2000 hours of operation)
- Chrome-plated cylinder rods
- Zinc Plated Hydraulic Tubes
- Remote lube for center arm bearing blocks
- Push Button controls with expanded system status notification

Return to Index Page

2020 Half/Pack® High- Compaction Front Loader - Sales Order Form			
	Base Units Half/Pack® High- Compaction Front Loader		
☐	20 cubic yard		$ 119,911
☐	23 cubic yard		$ 119,338
☐	28 cubic yard		$ 120,020
☐	32 cubic yard		$ 123,609
☐	Add Sumps to Body		$ 742
☐	Service Hoist Kit		$ 4,656
	Hopper Size		12 yd³
	CHASSIS MUST COMFORM WITH HEIL'S MOST CURRENT CHASSIS SPECIFICATIONS FOUND AT WWW.HEIL.COM		
	Mounting Options		
☐	Full Factory Mount for Service Hoist or Serviceable Eject - Includes Body Props and Rear Pivot		$ 5,840
☐	Mount at Dealer Destination		$ 783
	Power Take Off / Pump Options		
☐	Front Mount Vane Pump		STD
☐	Operate at Idle (OAI) Front Mount Tandem Vane Pump		$ 3,981
☐	Clutch Shift - Extended Shaft PTO with Single Vane Pump		$ 4,300
☐	Constant Drive - Extended Shaft PTO with Single Vane Pump		$ 4,300
	Commercial Gripper Option		
☐	Commercial Gripper attachment to the fork cross shaft to service 32-96 gallon residential containers (Commercial Grabbers add 6.5" of overall height when arms are fully raised and forks fully tuck *By selection this option you are confirming that understand the unit will be over 13' 6" when the arms are fully raised and the forks are fully tucked*	*SEE NOTE*	$ 7,468
	Adjustable Fork's Options		
☐	Hydraulically Adjustable Side Pocket Forks in lieu of standard Fork Cross Shaft *Will not work in conjunction with Curotto Commercial Gripper*		$ 8,240
☐	Hydraulically Adjustable Bottom Pocket Forks in lieu of standard Fork Cross Shaft *Will not work in conjunction with Curotto Can or Curotto Commercial Gripper attachments*		$ 11,845
	Control Options		
☐	Left Hand Dual Axis Joystick - Air Controlled		STD
☐	Left Hand 2 Lever In-Cab Air Controls in lieu of Joystick		$ 572
☐	Outside Air Lever Controls Kit (arms, forks and packer) with Throttle Advance		$ 2,477
☐	Outside Electric Push Button Control Kit with 2 Lever Pneumatic Joysticks (Enable, Pump, T/A and Packer)		$ 2,884
☐	Upgrade to **12"** In Cab Display in lieu of **7"** Std (Non- 3rd Eye Camera Units Only) - See 3rd Eye below for 12" Display with camera options)		$ 1,000
	Lighting and Electrical Accessories		
☐	Single LED Windscreen Mounted Container Light		$ 628
☐	Multi-Function Lights		$ 649
☐	Body Side Backing Assist Lights - LED		$ 536
☐	Dual Oval Flat LED Strobes Mounted Mid-T/G - in-cab switch, pump on, and reverse activated		$ 1,123
☐	Dual Cab Guard Mounted Flood Lights		$ 525
☐	Preco™ Back Up Alarm		$ 773
☐	Dual LED Cab Mounted Oval Strobe Lights		$ 770
☐	Whelen Strobe Lights Kit		$ 3,750
☐	Cab Shield Mounted LED Light Facing reward toward hopper opening		$ 628
	AWTI ™ Radar Systems		
☐	AWTI™ Radar System used in conjunction with 3rd Eye Cameras - Must Select Camera Kit From 3rd Eye Camera Options		$ 2,359
	Camera Systems		
	All camera systems are mounted with protective camera brackets and twin tailgate flood lights.		
	Swivel monitor bracket will be provided for dual drive chassis		
	3rd Eye® Camera Systems & 3rd® Eye Digital		
	Note: Camera systems will accommodate a maximum of 6 cameras, not including driver and forward facing cameras included in 3rd Eye® Digital system		
	CAMERA MONITOR LOCATION WILL BE CAB ROOF MOUNTED		
☐	Base 3rd Eye® Single Camera System with **7"** Monitor and Single Camera Mounted on Tailgate		$ 2,148
☐	Upgraded base 3rd Eye® Single Camera System with **12"** Monitor and Single Camera Mounted on Tailgate		$ 3,148
☐	Add on 3rd Eye® Camera (LH Cab) - Camera System Price Adder (Only available if base camera is selected)		$ 572
☐	Add on 3rd Eye® Camera (RH Cab) - Camera System Price Adder (Only available if base camera is selected)		$ 572
☐	Add on 3rd Eye® Camera (LH Alley) - Camera System Price Adder (Only available if base camera is selected)		$ 572
☐	Add on 3rd Eye® Camera (RH Alley) - Camera System Price Adder (Only available if base camera is selected)		$ 572
☐	Add on 3rd Eye® Camera (Hopper) - Camera System Price Adder (Only available if base camera is selected)		$ 572
☐	3rd Eye® Digital System: Includes (Driver and Forward Facing Camera (Window Unit), and Gateway - (In-Cab Monitor Not Included) - *Digital monitoring service not included and must be purchased and activated though 3rd Eye post delivery *		$ 3,317
	Load Cell Scale Systems		
☐	Heil Optimum Payload System (HOPS) using Air-Weigh Axle Scales		$ 9,275
☐	Air-Weigh™ Axle Scale System without Interlock		$ 8,652

2020 Half/Pack® High- Compaction Front Loader - Sales Order Form			
	Auxiliary Axles Options		
	* NOTE: All axles MUST BE installed with tires so chassis can be re-certified to new GAWR and GVWR ratings		
	Watson & Chalin™ Options		
☐	Watson & Chalin™ Self Steering Pusher Axle: 13,500 pound capacity, hub piloted or 20" spoke wheel hubs, automatic slack adjusters, type 16 air chambers, steering stabilizer kit and reverse lift kit -		$ 11,958
☐	Watson & Chalin™ Self Steering Tag Axle: 13,500 pound capacity, hub piloted or 20" spoke wheel hubs, automatic slack adjusters, type 16 air chambers, steering stabilizer kit and reverse lift kit, includes Tag Axle Spill Shield		$ 12,288
☐	Watson & Chalin™ Rigid Pusher Axle: 25,000 pound capacity, hub piloted or 20" spoke wheel hubs, 30/30 brake chambers, automatic slack adjusters, 1,300 cubic inch air tank and regulator kit		$ 15,017
☐	Watson & Chalin™ Rigid Tag Axle: 25,000 pound capacity, hub piloted or 20" spoke wheel hubs, 30/30 brake chambers, automatic slack adjusters, 1,300 cubic inch air tank and regulator kit, includes Tag Axle Spill Shield		$ 15,337
	Hendrickson™ Options		
☐	Hendrickson™ Pusher Axle-13.500 pound capacity, Non-Steerable		$ 12,041
☐	Hendrickson™ Pusher Axle-13.500 pound capacity, Steerable		$ 12,360
☐	Hendrickson™ Tag Axle-13.500 pound capacity, Steerable, includes Tag Axle Spill Shield		$ 12,360
☐	Hendrickson™ Tag Axle-13.500 pound capacity, Non- Steerable, includes Tag Axle Spill Shield		$ 12,041
☐	Hendrickson™ Steerable Pusher Axle: 20,000 pound capacity		$ 15,229
☐	Hendrickson™ Steerable Tag Axle: 20,000 pound capacity, includes Tag Axle Spill Shield		$ 15,548
	* Note: All auxiliary applications must be approved by Heil prior to order acceptance		
	Auxiliary Axle Tire Options		
☐	255/70R-22.5 - Qty(2) load range H, 5,510 pound single max load at 120 psi with Steel Wheels		$ 2,379
☐	275/70R-22.5 - Qty(2) load range H, 7,000 pound single max load at 120 psi with Steel Wheels		$ 3,008
☐	Upgrade to Polished Aluminum Wheels (Set of Two)		$ 1,545
	Body Options		
☐	Sliding Top Door - Aluminum - May not be compatible with roof mounted CNG system		$ 5,155
☐	Tailgate Mounted Aluminum Roof Access Ladder (Only one selection allowed) Not Available with CNrG Tailgate option		$ 1,859
☐	Tailgate Mounted Steel Roof Access Ladder (only one selection allowed) *Not available with CNrG Tailgate Option*		$ 1,427
☐	CNrG Tailgate Mounted Aluminum Roof Access Ladder (only one selection allowed) * Not Available with STD Tailgate*		$ 1,859
☐	Curbside Mounted Roof Access Ladder (Only one selection allowed) *Not Available on 23yd body with Top Door*		$ 1,427
☐	Hopper Floor Liner (3/16" - AR400)		$ 1,906
☐	Hopper Floor Liner (1/4" - AR400)		$ 3,033
☐	Body Floor Liner (3/16" - AR400)		$ 2,163
☐	Body Side Wall Liners (3/16 - AR400)		$ 1,854
☐	Packer Mounted Retainer Teeth		$ 773
☐	Body Roof Retainer Teeth - 2 Rows at the front of the body - Minimizes Spring Back In Cardboard and Recycling Applications		$ 1,107
☐	Packer Follower - Reduces Garbage/Recycle Behind the Packer **(Includes Inverted Style cab protector) Other cab protectors not compatible with this option.**		$ 1,674
☐	High Pressure Filter Kit		$ 958
☐	High Pressure Filter Monitor		$ 711
☐	60 Gallon Washout Tank - side mounted - Not available with pusher axle		$ 2,153
☐	60 Gallon Washout Tank - rear mounted - Not available with tag axle		$ 2,153
☐	Second 20 lb. Fire Extinguisher (Will be mounted to Curb side Hopper, if unable will be mounted under body)		$ 525
☐	Tool Box Bumper Mount - Steel - 18"x18"x24"		$ 814
☐	Tool Box Bumper Mount - Aluminum - 18"x18"x24"		$ 963
☐	Tool Box Bumper Mount - Poly - 18"x18"x24"		$ 731
☐	Extendable Broom Kit - Mounted Curbside of Body (Not Available on 20/23 Yd)		$ 438
☐	Extendable Broom Kit - Mounted Under Body		$ 438
☐	Street Side of Body Mounted Shovel Bracket Kit		$ 250
☐	Fork Stop Kit - Increases overall height 20" when forks are in the full dump position *By selection this option you are confirming that you understand the unit will be over 13' 6" when the forks are in the dump position*	*SEE NOTE*	$ 263
☐	Cab Protector Extension Raise - Manual Jack		$ 1,210
☐	Aluminum Cab Protector		$ 2,256
☐	Aluminum Cab Protector Extension For Autocar Chassis		$ 664
☐	Rear Caution Decal		$ 304
☐	Wheel Chock Kit - Dual (Mounted Under Body)		$ 170
☐	Wheel Chock Kit - Dual (Mounted on Curbside Body)		$ 170
☐	Cable Fall Protection Kit		$ 3,610
☐	D-Ring Fall Protection		$ 876
☐	Hydraulic Oil Tank Quick Disconnect Kit - For use with filter buggy		$ 865
☐	Service Loop Plumbing - Butterfly Style Quick Disconnects		$ 625
☐	Hydraulic Raise Cab Protector Kit		$ 5,660
☐	Spill Kit including mounting brackets - (Mounted on Front Head)		$ 361
☐	Spill Kit (In Toolbox) *Requires additional purchase of a tool box*		$ 335
☐	Hydraulic Oil Tank Heater - 500 watts		$ 1,262
☐	Bolt On Fender Extension Kit - Keeps Body Clean of Road Spray		$ 773
☐	California Back Up Alarm		$ 716
☐	Infinity Series Packer/Eject Cylinders with scrapers and hardened rods to 50 HRC - Includes Five (5) Year Packer/Eject Cylinder Only Warranty (This Option is Required if purchasing extended warranty's below)		$ 3,245
	CNrG Tailgate Mounted CNG - Includes Installation Fee		
☐	60 DGE CNrG System		$ 42,889
☐	75 DGE CNrG System		$ 44,676
☐	90 DGE CNrG System		$ 50,784
☐	105 DGE CNrG System		$ 57,999
	FET Exempt CNrG Tailgate Mounted CNG For 20YD Bodies Only- Includes Installation Fee		
☐	60 DGE CNG System		$ 45,541
☐	75 DGE CNG System		$ 47,329
☐	90 DGE CNG System		$ 53,436
☐	105 DGE CNG System		$ 60,652
	CNrG Options		
☐	Front Bumper Fill with Kill Cap		$ 1,329
☐	Remote Fill, StreetSide Rear Fill Port		$ 2,318
☐	Remote Fill, Curbside Rear Fill Port		$ 2,318
☐	Defuel Transfer Hose - 35 ft.		$ 2,034
	CNG Installation - Top of Body Installation		
☐	CNG Installation Charge - Includes brackets, temporary tank rental, hardware, and mounting of CNG system		$ 5,969

2020 Half/Pack® High- Compaction Front Loader - Sales Order Form			
	Extended Complete Body Warranty Options		
☐	Two (2) Year (Months 13-24) (Maximum 4,000 hrs. of Operation) Complete Heil Body Warranty- Requires additional purchase of Infinity packer/eject cylinders from above		$ 4,671
☐	Three (3) Year (Months 13-36) (Maximum 6,000 hrs. of Operation) Complete Heil Body Warranty Requires additional purchase of Infinity packer/eject cylinders from above		$ 8,013
☐	Four (4) Year (Months 13-48) (Maximum 8,000 hrs. of Operation) Complete Heil Body Warranty Requires additional purchase of Infinity packer/eject cylinders from above		$ 11,284
☐	Five (5) Year (Months 13-60) (Maximum 10,000 hrs. of Operation) Complete Heil Body Warranty Requires additional purchase of Infinity packer/eject cylinders from above		$ 15,126
	Extended Cylinder Warranty Options		
☐	Two (2) Year (Months 13-24) (Maximum 4,000 hrs. of Operation) All other Non-Infinity Cylinder Warranty Requires additional purchase of Infinity packer/eject cylinders from above		$ 1,030
☐	Three (3) Year (Months 13-36) (Maximum 6,000 hrs. of Operation) All other Non-Infinity Cylinder Warranty - Requires additional purchase of Infinity packer/eject cylinders from above		$ 2,065
☐	Four (4) Year (Months 13-48) (Maximum 8,000 hrs. of Operation) All other Non-Infinity Cylinder Warranty - Requires additional purchase of Infinity packer/eject cylinders from above		$ 3,095
☐	Five (5) Year (Months 13-60) (Maximum 10,000 hrs. of Operation) All other Non-Infinity Cylinder Warranty - Requires additional purchase of Infinity packer/eject cylinders from above		$ 3,605
	Extended Hydraulic Pump and Valve Warranty Options		
☐	Two (2) Year (Months 13-24) (Maximum 4,000 hours of operation) Hydraulic Pump and Valve warranty *Not needed if purchasing extended complete body warranty*		$ 1,246
☐	Three (3) Year (Months 13-36) (Maximum 6,000 hours of operation) Hydraulic Pump and Valve warranty *Not needed if purchasing extended complete body warranty*		$ 2,421
☐	Four (4) Year (Months 13-48) (Maximum 8,000 hours of operation) Hydraulic Pump and Valve warranty *Not needed if purchasing extended complete body warranty*		$ 3,600
☐	Five (5) Year (Months 13-60) (Maximum 10,000 hours of operation) Hydraulic Pump and Valve warranty *Not needed if purchasing extended complete body warranty*		$ 6,232
	Paint Options		
	NOTE: LIST PAINT CODES ON PAINT DIAGRAM		
☐	Customized Paint Color - Paint Color Code NOT included in the Color Smart Brochure		$ 417
☐	Two Tone Paint		$ 1,576
☐	Paint Striping - first stripe		$ 1,329
☐	Paint Striping - each additional stripe		$ 742
☐	Metallic Paint		$ 7,210
☐	Clear coat Finish		$ 1,844
☐	Anti-Graffiti Clear coat Finish		$ 2,652
☐	Prime Paint Only - deduct		$ (1,220)
☐	Heil CleanShield™ by BrandArmor™/ Cab protector decal.		$ 1,432
	Totals		
	Total from Options Above (MSRP)		$ -
	Additional Options (Custom's, Chassis Mods, Etc.) Total		
	Subtotal		$ -
	Dealer Discount (%)	0%	$ -
	Dealer Net Price		$ -
	Surcharge if Applicable		$ -
	Additional Discount (SPR)		$ -
	Freight		$ -
	Total Price per Unit	$	-

Return to Index Page

Half/Pack®

Paint Stripe and Accessory Requirements

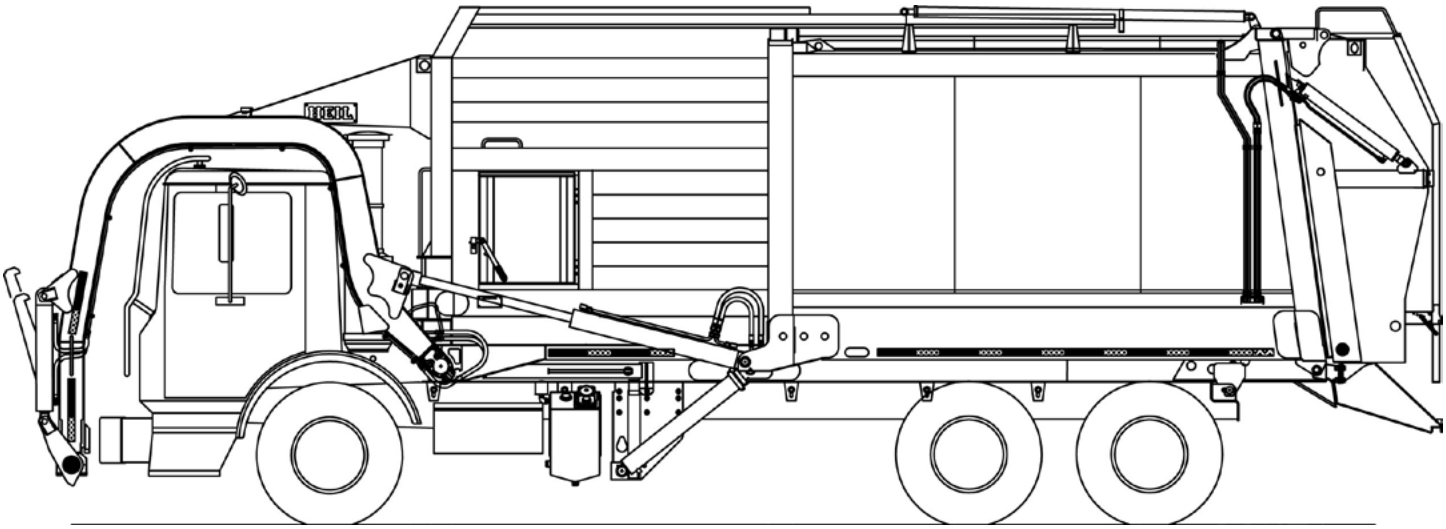

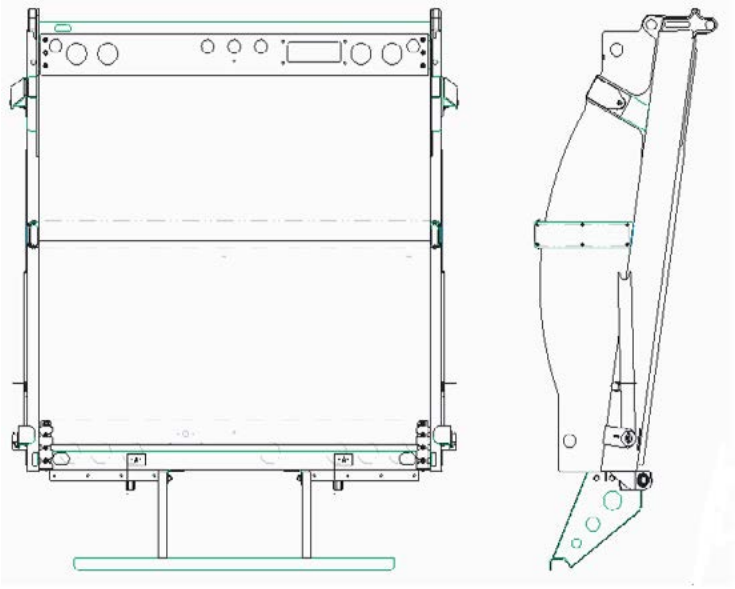

Paint and options layout detail
Use this form to describe paint schemes
Be specific about dimensions and details

Sales Order #		Submitted by	
Customer			
Paint Color 1			
Paint Color 2			
Paint Color 3			
Chassis Make			
Chassis Model			
Wheelbase			
Body Size		Approved by	

Half/Pack® Sierra

Optimal Payload Front Loader

Standard Equipment Features included in Base Price

- Steel sliding top door
- Hinged and completely sealed left-side body access door with step and grab handle
- Full aluminum cab shield with air cylinder assisted raise
- 3” underbody gate valve on street side for liquid removal
- Body service props
- Tailgate service props
- Fully automatic Shur-Lock™ tailgate latches
- Clamp-on arms
- 8,000 lb. capacity arms - WASTEC WRP 06-1996 rated
- Four arm shaft bearing supports
- Fork cross shaft rubber bumpers
- Bolt-on rubber arm stops
- Heavy-duty forks - 1 1/2” thick x 59” grip length
- Front mount single vane pump
- Arm Hydraulic Tube Covers
- Crossed packing cylinders
- Chassis frame-mounted oil tank with level / temperature gauge and suction shut-off valve
- 3-micron return line filter with magnetic trap and in-cab filter bypass monitor
- 100-micron suction line strainer
- Abrasion-resistant hydraulic hoses
- Cortex Controller ™ with InSight™ diagnostic display with integrated 3rd Eye camera feed
- Throttle advance / throttle limit kit
- Joystick in-cab air controls
- Complete array of in-cab function indicator lights on in cab display
- 5 lb. in-cab fire extinguisher
- Tailgate lock & closed indicator sensor with in-cab indicator and alarm
- ANSI Z 245.1-2017 compliant
- Streetwise Hydraulics™
- Arm rest for operator controls
- Backup alarm
- Backup and license plate light
- LED center-mounted brake light
- LED duplicate high and low mount stop, turn, and tail lights
- LED mid-body turn signals
- Strobe light, amber mounted on lower tailgate - in-cab switch, pump on, and reverse activated
- Front and rear mud flaps - anti-sail / anti-splash
- Rear under ride guard
- Hopper flood light
- Shovel kit mounted on back of the packer
- Low oil level sensor with light, buzzer, and pump shut-off
- Severe-duty wear bar kit
- Chrome-plated cylinder rods
- Remote packer lube kit
- Greaseless tailgate hinge and lift cylinders
- Hydraulic oil temperature sensor with alarm
- Body hydraulic pressure sensor
- Arm / Fork over height warning kit
- 20 lb. fire extinguisher
- FMVSS #108 clearance lights and reflectors
- ICC reflective tape
- Rear camera bracket and flood lights - reverse activated
- Body undercoating
- Customer’s choice of one color finish paint from Color Smart brochure
- Standard 1-year warranty (2,000 Hours of Operation)
- Safety triangle
- Cavity coat and joint sealer
- Remote I/O for tailgate valve

Return to Index Page

2020 Half/Pack® Sierra Optimal Payload Front Loader - Sales Order Form - CHASSIS MUST COMFORM WITH HEIL'S MOST CURRENT CHASSIS SPECIFICATIONS AT WWW.HEIL.COM

	Base Units Half/Pack® Sierra Optimal Payload Front Loader		
☐	20 Cubic Yard		$ 129,883
☐	23 Cubic Yard		$ 129,201
☐	28 cubic yard		$ 129,883
☐	Add Sumps to Body		$ 742
☐	Service Hoist Kit		$ 4,656
	Hopper Size		12 yd³
	Mounting Options		
☐	Full Factory Mount for Service Hoist or Serviceable Eject - Includes Body Props and Rear Pivot		$ 5,840
☐	Mount at Dealer Destination		$ 783
	Power Take Off / Pump Options		
☐	Front Mount Vane Pump		STD
☐	Operate at Idle (OAI) Front Mount Tandem Vane Pump		$ 3,981
☐	Clutch Shift - Extended Shaft PTO with Single Vane Pump		$ 4,300
☐	Constant Drive - Extended Shaft PTO with Single Vane Pump		$ 4,300
	Commercial Gripper Option		
☐	Commercial Gripper attachment to the fork cross shaft to service 32-96 gallon residential containers (Commercial Grabbers add 6.5" of overall height when arms are fully raised and forks fully tucked)		$ 7,468
	Adjustable Fork's Options		
☐	Hydraulically Adjustable Side Pocket Forks in lieu of standard Fork Cross Shaft *Will not work in conjunction with Curotto Commercial Gripper*		$ 8,240
☐	Hydraulically Adjustable Bottom Pocket Forks in lieu of standard Fork Cross Shaft *Will not work in conjunction with Curotto Commercial Gripper*		$ 11,845
	Control Options		
☐	Left Hand Dual Axis Joystick - Air Controlled		STD
☐	Left Hand 2 Lever In-Cab Air Controls in lieu of Joystick		$ 572
☐	Outside Air Lever Controls Kit (arms, forks and packer) with Throttle Advance		$ 2,477
☐	Outside Electric Push Button Control Kit with 2 Lever Joysticks (Enable, Pump, T/A and Packer)		$ 2,884
☐	Upgrade to **12"** In Cab Display in lieu of **7"** Std (Non- 3rd Eye Camera Units Only) - See 3rd Eye below for 12" Display with camera options)		$ 1,000
	Lighting and Electrical Accessories		
☐	Single LED Windscreen Mounted Container Light		$ 628
☐	Multi-Function Lights		$ 649
☐	Body Side Backing Assist Lights - LED		$ 536
☐	Dual Oval Flat LED Strobes Mounted Mid-T/G - in-cab switch, pump on, and reverse activated		$ 1,123
☐	Dual Cab Guard Mounted Flood Lights		$ 525
☐	Preco™ Back Up Alarm		$ 773
☐	Dual LED Cab Mounted Oval Strobe Lights		$ 770
☐	Whelen Strobe Lights Kit		$ 3,750
☐	Cab Shield Mounted LED Light Facing reward toward hopper opening		$ 628
	AWTI ™ Radar Systems		
☐	AWTI™ Radar System used in conjunction with 3rd Eye Cameras - Must Select Camera Kit From 3rd Eye Camera Options		$ 2,359
	Camera Systems		
	All camera systems are mounted with protective camera brackets and twin tailgate flood lights		
	CAMERA MONITOR/ Display LOCATION WILL BE CAB ROOF MOUNTED - Swivel monitor bracket will be provided for dual drive chassis		
	3rd Eye® Camera Systems & 3rd® Eye Digital		
	Note: Camera systems will accommodate a maximum of 6 cameras, not including driver and forward facing cameras included in 3rd Eye Digital system		
☐	Base 3rd Eye® Single Camera System with **7"** Monitor and Single Camera Mounted on Tailgate		$ 2,148
☐	Upgraded base 3rd Eye® Single Camera System with **12"** Monitor and Single Camera Mounted on Tailgate		$ 3,148
☐	Add on 3rd Eye® Camera (LH Cab) - Camera System Price Adder (Only available if base camera is selected)		$ 572
☐	Add on 3rd Eye® Camera (RH Cab) - Camera System Price Adder (Only available if base camera is selected)		$ 572
☐	Add on 3rd Eye® Camera (LH Alley) - Camera System Price Adder (Only available if base camera is selected)		$ 572
☐	Add on 3rd Eye® Camera (RH Alley) - Camera System Price Adder (Only available if base camera is selected)		$ 572
☐	Add on 3rd Eye® Camera (Hopper) - Camera System Price Adder (Only available if base camera is selected)		$ 572
☐	3rd Eye® Digital System: Includes (Driver and Forward Facing Camera (Window Unit), and Gateway - (**In-Cab Monitor Not Included**) - *Digital monitoring service not included and must be purchased and activated though 3rd Eye post delivery *		$ 3,317
	Load Cell Scale Systems		
☐	Heil Optimum Payload System (HOPS) using Air-Weigh Axle Scales		$ 9,275
☐	Air-Weigh™ Axle Scale System without Interlock		$ 8,652

2020 Half/Pack® Sierra Optimal Payload Front Loader - Sales Order Form - CHASSIS MUST COMFORM WITH HEIL'S MOST CURRENT CHASSIS SPECIFICATIONS AT WWW.HEIL.COM

	Auxiliary Axles Options		
	* NOTE: All axles MUST BE installed with tires so chassis can be re-certified to new GAWR and GVWR ratings		
	Watson & Chalin™ Options		
☐	Watson & Chalin™ Self Steering Pusher Axle: 13,500 pound capacity, hub piloted or 20" spoke wheel hubs, automatic slack adjusters, type 16 air chambers, steering stabilizer kit and reverse lift kit -		$ 11,958
☐	Watson & Chalin™ Self Steering Tag Axle: 13,500 pound capacity, hub piloted or 20" spoke wheel hubs, automatic slack adjusters, type 16 air chambers, steering stabilizer kit and reverse lift kit, includes Tag Axle Spill Shield		$ 12,288
☐	Watson & Chalin™ Rigid Pusher Axle: 25,000 pound capacity, hub piloted or 20" spoke wheel hubs, 30/30 brake chambers, automatic slack adjusters, 1,300 cubic inch air tank and regulator kit		$ 15,017
☐	Watson & Chalin™ Rigid Tag Axle: 25,000 pound capacity, hub piloted or 20" spoke wheel hubs, 30/30 brake chambers, automatic slack adjusters, 1,300 cubic inch air tank and regulator kit, includes Tag Axle Spill Shield		$ 15,337
	Hendrickson™ Options		
☐	Hendrickson™ Pusher Axle-13.500 pound capacity, Non-Steerable		$ 12,041
☐	Hendrickson™ Pusher Axle-13.500 pound capacity, Steerable		$ 12,360
☐	Hendrickson™ Tag Axle-13.500 pound capacity, Steerable, includes Tag Axle Spill Shield		$ 12,360
☐	Hendrickson™ Tag Axle-13.500 pound capacity, Non- Steerable, includes Tag Axle Spill Shield		$ 12,041
☐	Hendrickson™ Steerable Pusher Axle: 20,000 pound capacity		$ 15,229
☐	Hendrickson™ Steerable Tag Axle: 20,000 pound capacity, includes Tag Axle Spill Shield		$ 15,548
	* Note: All auxiliary applications must be approved by Heil prior to order acceptance		
	Auxiliary Axle Tire Options		
☐	255/70R-22.5 - Qty(2) load range H, 5,510 pound single max load at 120 psi with Steel Wheels		$ 2,379
☐	275/70R-22.5 - Qty(2) load range H, 7,000 pound single max load at 120 psi with Steel Wheels		$ 3,008
☐	Upgrade to Polished Aluminum Wheels (Set of Two)		$ 1,545
	Body Options		
☐	Sliding Top Door - Aluminum - May not be compatible with roof mounted CNG system		$ 5,155
☐	Tailgate Mounted Aluminum Roof Access Ladder (Only one selection allowed) Not Available with CNrG Tailgate option		$ 1,859
☐	Tailgate Mounted Roof Access Ladder Steel (Only one selection allowed) *Not available with CNrG Tailgate Option*		$ 1,427
☐	CNrG Tailgate Mounted Aluminum Roof Access Ladder (only one selection allowed) * Not Available with STD Tailgate*		$ 1,859
☐	Curbside Mounted Roof Access Ladder (Only one selection allowed) *Not Available on 23yd body with Top Door*		$ 1,427
☐	Hopper Floor Liner (3/16" - AR400)		$ 1,906
☐	Hopper Floor Liner (1/4" - AR400)		$ 3,033
☐	Body Floor Liner (3/16" - AR400)		$ 2,163
☐	Body Side Wall Liners (3/16 - AR400)		$ 1,854
☐	Packer Mounted Retainer Teeth		$ 773
☐	Body Roof Retainer Teeth - 2 Rows at the front of the body - Minimizes Spring Back In Cardboard and Recycling Applications		$ 1,107
☐	Packer Follower - Reduces Garbage/Recycle Behind the Packer **(Includes Inverted Style cab protector) Other cab protectors not compatible with this option.**		$ 1,674
☐	High Pressure Filter Kit		$ 958
☐	High Pressure Filter Monitor		$ 711
☐	60 Gallon Washout Tank - side mounted - Not available with pusher axle		$ 2,153
☐	60 Gallon Washout Tank - rear mounted - Not available with tag axle		$ 2,153
☐	Second 20 lb. Fire Extinguisher (Will be mounted to Curb side Hopper, if unable will be mounted under body)		$ 525
☐	Tool Box Bumper Mount - Steel - 18"x18"x24"		$ 814
☐	Tool Box Bumper Mount - Aluminum - 18"x18"x24"		$ 963
☐	Tool Box Bumper Mount - Poly - 18"x18"x24"		$ 731
☐	Extendable Broom Kit - Mounted Curbside of Body (Not Available on 20/23 Yd)		$ 438
☐	Extendable Broom Kit - Mounted Under Body		$ 438
☐	Street Side of Body Mounted Shovel Bracket Kit		$ 250
☐	Fork Stop Kit - Increases overall height 20" when forks are in the full dump position		$ 263
☐	Cab Protector Extension Raise - Manual Jack		$ 1,210
☐	Steel Cab Protector		$ 2,009
☐	Aluminum Cab Protector Extension For Autocar Chassis		$ 664
☐	Rear Caution Decal		$ 304
☐	Wheel Chock Kit - Dual (Mounted Under Body)		$ 170
☐	Wheel Chock Kit - Dual (Mounted on Curbside Body)		$ 170
☐	Cable Fall Protection Kit		$ 3,610
☐	D-Ring Fall Protection		$ 876
☐	Hydraulic Oil Tank Quick Disconnect Kit - For use with filter buggy		$ 865
☐	Service Loop Plumbing - Butterfly Style Quick Disconnects		$ 625
☐	Hydraulic Raise Cab Protector Kit		$ 5,660
☐	Spill Kit included mounting brackets - (Mounted on Front Head)		$ 361
☐	Spill Kit (In Toolbox) *Requires additional purchase of a tool box*		$ 335
☐	Hydraulic Oil Tank Heater - 500 watts		$ 1,262
☐	Bolt On Fender Extension Kit - Keeps Body Clean of Road Spray		$ 773
☐	California Back Up Alarm		$ 716
☐	Infinity Series Packer/Eject Cylinders with scrapers and hardened rods - Includes Five (5) Year Packer/Eject Cylinder Only Warranty (This Option is Required if purchasing extended warranty's below)		$ 3,245

2020 Half/Pack® Sierra Optimal Payload Front Loader - Sales Order Form - CHASSIS MUST COMFORM WITH HEIL'S MOST CURRENT CHASSIS SPECIFICATIONS AT WWW.HEIL.COM

	CNrG Tailgate Mounted CNG - Includes Installation Fee		
☐	60 DGE CNG System		$ 42,889
☐	75 DGE CNG System		$ 44,676
☐	90 DGE CNG System		$ 50,784
☐	105 DGE CNG System		$ 57,999
	FET Exempt CNrG Tailgate Mounted CNG For 20YD Bodies Only- Includes Installation Fee		
☐	60 DGE CNG System		$ 45,541
☐	75 DGE CNG System		$ 47,329
☐	90 DGE CNG System		$ 53,436
☐	105 DGE CNG System		$ 60,652
	CNrG Options		
☐	Front Bumper Fill with Kill Cap		$ 1,329
☐	Remote Fill, StreetSide Rear Fill Port		$ 2,318
☐	Remote Fill, Curbside Rear Fill Port		$ 2,318
☐	Defuel Transfer Hose - 35 ft.		$ 2,034
	CNG Installation - Top of Body Installation		
☐	CNG Installation Charge - Includes brackets, temporary tank rental, hardware, and mounting of CNG system		$ 5,969
	Extended Warranty		
☐	Two (2) Year (Months 13-24) (Maximum 4,000 hrs. of Operation) Complete Heil Body Warranty Requires additional purchase of Infinity packer/eject cylinders from above		$ 4,671
☐	Three (3) Year (Months 13-36) (Maximum 6,000 hrs. of Operation) Complete Heil Body Warranty Requires additional purchase of Infinity packer/eject cylinders from above		$ 8,013
☐	Four (4) Year (Months 13-48) (Maximum 8,000 hrs. of Operation) Complete Heil Body Warranty Requires additional purchase of Infinity packer/eject cylinders from above		$ 11,284
☐	Five (5) Year (Months 13-60) (Maximum 10,000 hrs. of Operation) Complete Heil Body Warranty Requires additional purchase of Infinity packer/eject cylinders from above		$ 15,126
	Extended Cylinder Warranty Options		
☐	Two (2) Year (Months 13-24) (Maximum 4,000 hrs. of Operation) All other Non-Infinity Cylinder Warranty - Requires additional purchase of Infinity packer/eject cylinders from above		$ 1,030
☐	Three (3) Year (Months 13-36) (Maximum 6,000 hrs. of Operation) All other Non-Infinity Cylinder Warranty - Requires additional purchase of Infinity packer/eject cylinders from above		$ 2,065
☐	Four (4) Year (Months 13-48) (Maximum 8,000 hrs. of Operation) All other Non-Infinity Cylinder Warranty - Requires additional purchase of Infinity packer/eject cylinders from above		$ 3,095
☐	Five (5) Year (Months 13-60) (Maximum 10,000 hrs. of Operation) All other Non-Infinity Cylinder Warranty - Requires additional purchase of Infinity packer/eject cylinders from above		$ 3,605
	Extended Hydraulic Pump and Valve Warranty Options		
☐	Two (2) Year (Months 13-24) (Maximum 4,000 hours of operation) Hydraulic Pump and Valve warranty *Not needed if purchasing extended complete body warranty*		$ 1,246
☐	Three (3) Year (Months 13-36) (Maximum 6,000 hours of operation) Hydraulic Pump and Valve warranty *Not needed if purchasing extended complete body warranty*		$ 2,421
☐	Four (4) Year (Months 13-48) (Maximum 8,000 hours of operation) Hydraulic Pump and Valve warranty *Not needed if purchasing extended complete body warranty*		$ 3,600
☐	Five (5) Year (Months 13-60) (Maximum 10,000 hours of operation) Hydraulic Pump and Valve warranty *Not needed if purchasing extended complete body warranty*		$ 6,232
	Paint Options		
	NOTE: LIST PAINT CODES ON PAINT DIAGRAM		
☐	Customized Paint Color - Paint Color Code NOT included in the Color Smart Brochure		$ 417
☐	Two Tone Paint		$ 1,576
☐	Paint Striping - first stripe		$ 1,329
☐	Paint Striping - each additional stripe		$ 742
☐	Metallic Paint		$ 7,210
☐	Clear coat Finish		$ 1,844
☐	Anti-Graffiti Clear coat Finish		$ 2,652
☐	Prime Paint Only - deduct		$ (1,220)
☐	Heil CleanShield™ by BrandArmor™" Cab protector decal.		$ 1,432
	TOTALS		
	Total from Options Above (MSRP)		$ -
	Additional Options (Custom's, Chassis Mods, Etc.) Total		
	Subtotal		$ -
	Dealer Discount (%)	0%	$ -
	Dealer Net Price		$ -
	Surcharge if Applicable		$ -
	Additional Discount (SPR)		
	Freight		
	Total Price per Unit		$ -

Return to Index Page

Half/Pack® Sierra

Paint Stripe and Accessory Requirements

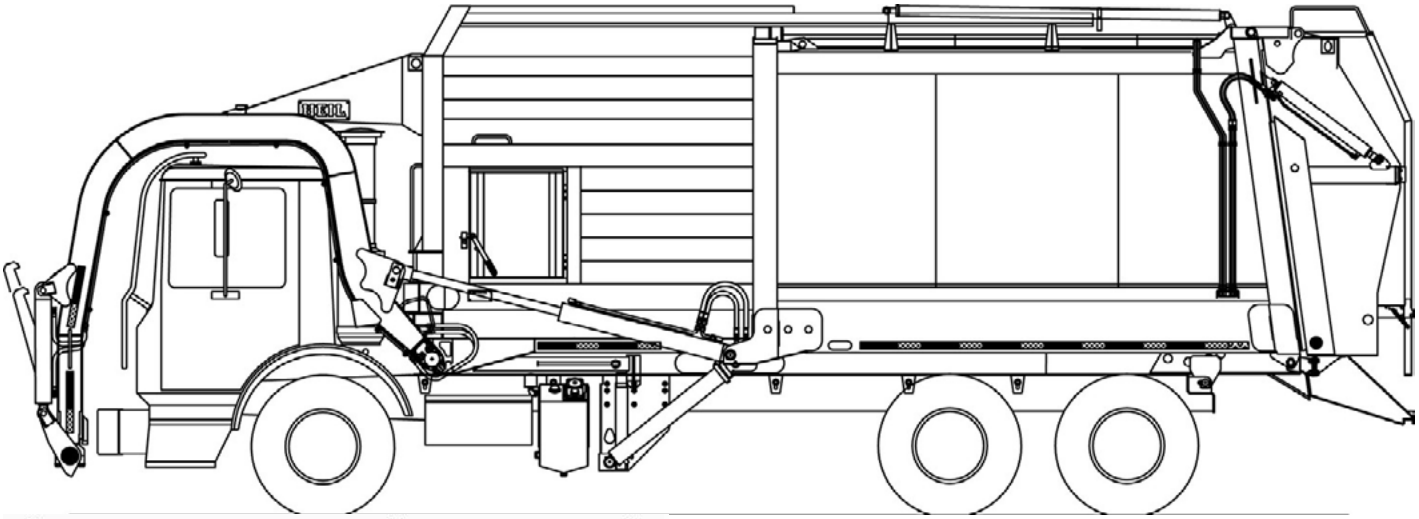

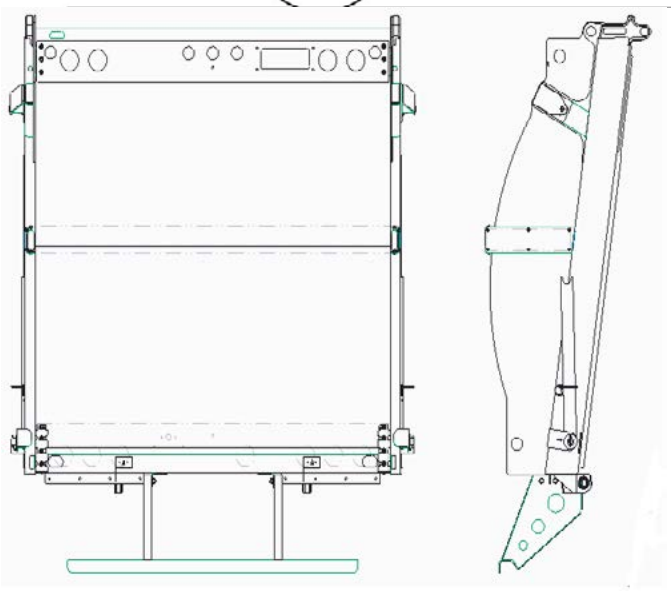

Paint and options layout detail Use this form to describe paint schemes Be specific about dimensions and details

Sales Order #		Submitted by	
Customer			
Paint Color 1			
Paint Color 2			
Paint Color 3			
Chassis Make			
Chassis Model			
Wheelbase			
Body Size		Approved by	

Half/Pack® Freedom

High-Performance, Optimal Payload Front Loader

Standard Equipment Features included in Base Price

- Hinged and completely sealed left-side aluminum body access door with step and grab handle
- Full aluminum cab shield with air cylinder assisted raise
- 3” underbody gate valve on street side for liquid removal
- Front head closure screen
- Body service props
- Tailgate service props
- Fully automatic Shur-Lock™ tailgate locks
- Clamp-on arms
- 8,000 lb. capacity arms - WASTEC WRP 06-1996 rated
- Four arm shaft bearing supports
- Bolt-on rubber arm stops
- Heavy-duty forks - 1” thick x 59” grip length
- Front mount single vane pump
- ANSI Z 245.1-2017 compliant
- Chassis frame-mounted aluminum oil tank with level / temperature gauge and suction shut-off valve
- 3-micron return line filter with magnetic trap and in-cab filter bypass monitor
- Heil Optimum Payload System - HOPS™
- 100-micron suction line strainer
- Abrasion-resistant hydraulic hoses
- Cortex Controller ™ with InSight™ diagnostic display with integrated 3rd Eye camera feed
- Throttle advance / throttle limit kit
- Joystick in-cab air controls
- Complete array of in-cab function indicator lights on in cab display
- Arm rest for operator controls
- 5 lb. in-cab fire extinguisher
- Tailgate lock and closed indicator sensor with in cab indicator and alarm
- Safety triangle
- Arm Hydraulic Tube Covers
- Remote I/O for tailgate valve
- Streetwise Hydraulics™
- Backup alarm
- Hopper flood light
- Low oil level sensor light, buzzer, and pump shut-off
- Severe-duty wear bar kit
- Remote packer lube kit
- Greaseless tailgate hinge and lift cylinders
- Hydraulic oil temperature sensor with alarm
- Body hydraulic pressure sensor
- Shovel kit mounted on back of the packer
- Arm / Fork overweight warning kit
- Backup and license plate light
- LED center-mounted brake light
- LED duplicate high and low mount stop, turn, and tail lights
- LED mid-body turn signals
- Strobe light, amber mounted on lower tailgate - in-cab switch, pump on, and reverse activated
- Front and rear mud flaps - anti-sail / anti-splash
- Rear under ride guard
- 20 lb. fire extinguisher
- FMVSS #108 clearance lights & reflectors
- ICC reflective tape
- Rear camera bracket and flood lights - reverse activated
- Body undercoating
- Customer’s choice of one color finish paint from Color Smart brochure
- Standard 1-year warranty (2,000 Hours of Operation)
- Cavity coat and joint sealer
- Chrome-plated cylinder rods
- Remote lube for center arm bearing blocks
- Push Button controls with expanded system status notification
- Zinc Plated Hydraulic Tubes

Return to Index Page

2020 Half/Pack® Freedom High-Performance, Optimal Payload Front Loader -Sales Order Form		
Base Units Half/Pack® Freedom High-Performance, Optimal Payload Front Loader		
☐ 20 cubic yard		$ 137,210
☐ 23 cubic yard		$ 136,636
☐ 28 cubic yard		$ 137,210
☐ Add Sumps to Body		$ 742
☐ Service Hoist Kit		$ 4,656
Hopper Size		12 yd^3
CHASSIS MUST COMFORM WITH HEIL'S MOST CURRENT CHASSIS SPECIFICATIONS AT WWW.HEIL.COM		
Mounting Options		
☐ Full Factory Mount for Service Hoist or Serviceable Eject - Includes Body Props and Rear Pivot		$ 5,840
☐ Mount at Dealer Destination		$ 783
Power Take Off / Pump Options		
☐ Front Mount Vane Pump		STD
☐ Operate at Idle (OAI) Front Mount Tandem Vane Pump		$ 3,981
☐ Clutch Shift - Extended Shaft PTO with Single Vane Pump		$ 4,300
☐ Constant Drive - Extended Shaft PTO with Single Vane Pump		$ 4,300
Commercial Gripper Option		
☐ Commercial Gripper attachment to the fork cross shaft to service 32-96 gallon residential containers (Commercial Grabbers add 6.5" of overall height when arms are fully raised and forks fully tucked)		$ 7,468
Adjustable Fork's Options		
☐ Hydraulically Adjustable Side Pocket Forks in lieu of standard Fork Cross Shaft *Will not work in conjunction with Curotto Commercial Gripper*		$ 8,240
☐ Hydraulically Adjustable Bottom Pocket Forks in lieu of standard Fork Cross Shaft *Will not work in conjunction with Curotto Can or Curotto Commercial Gripper attachments*		$ 11,845
Control Options		
☐ Left Hand Dual Axis Joystick - Air Controlled		STD
☐ Left Hand 2 Lever In-Cab Air Controls in lieu of Joystick		$ 572
☐ Outside Air Lever Controls Kit (arms, forks and packer) with Throttle Advance		$ 2,477
☐ Outside Electric Push Button Control Kit with 2 Lever Joysticks (Enable, Pump, T/A and Packer)		$ 2,884
☐ Upgrade to **12"** In Cab Display in lieu of **7"** Std (Non- 3rd Eye Camera Units Only) - See 3rd Eye below for 12" Display with camera options)		$ 1,000
Lighting and Electrical Accessories		
☐ Single LED Windscreen Mounted Container Light		$ 628
☐ Multi-Function Lights		$ 649
☐ Body Side Backing Assist Lights - LED		$ 536
☐ Dual Oval Flat LED Strobes Mounted Mid-T/G - in-cab switch, pump on, and reverse activated		$ 1,123
☐ Dual Cab Guard Mounted Flood Lights		$ 525
☐ Preco™ Back Up Alarm		$ 773
☐ Dual LED Cab Mounted Oval Strobe Lights		$ 770
☐ Whelen Strobe Lights Kit		$ 3,750
☐ Cab Shield Mounted LED Light Facing reward toward hopper opening		$ 628
AWTI ™ Radar Systems		
☐ AWTI™ Radar System used in conjunction with 3rd Eye Cameras - Must Select Camera Kit From 3rd Eye Camera Options		$ 2,359
Camera Systems		
All camera systems are mounted with protective camera brackets and twin tailgate flood lights		
Camera Systems		
Note: Camera systems will accommodate a maximum of 6 cameras, not including driver and forward facing cameras included in 3rd Eye Digital system		
☐ Base 3rd Eye® Single Camera System with **7"** Monitor and Single Camera Mounted on Tailgate		$ 2,148
☐ Upgraded base 3rd Eye® Single Camera System with **12"** Monitor and Single Camera Mounted on Tailgate		$ 3,148
☐ Add on 3rd Eye® Camera (LH Cab) - Camera System Price Adder (Only available if base camera is selected)		$ 572
☐ Add on 3rd Eye® Camera (RH Cab) - Camera System Price Adder (Only available if base camera is selected)		$ 572
☐ Add on 3rd Eye® Camera (LH Alley) - Camera System Price Adder (Only available if base camera is selected)		$ 572
☐ Add on 3rd Eye® Camera (RH Alley) - Camera System Price Adder (Only available if base camera is selected)		$ 572
☐ Add on 3rd Eye® Camera (Hopper) - Camera System Price Adder (Only available if base camera is selected)		$ 572
☐ 3rd Eye® Digital System: Includes (Driver and Forward Facing Camera (Window Unit), and Gateway - (**In-Cab Monitor Not Included**) - *Digital monitoring service not included and must be purchased and activated though 3rd Eye post delivery *		$ 3,317

2020 Half/Pack® Freedom High-Performance, Optimal Payload Front Loader -Sales Order Form		
Auxiliary Axles Options		
* NOTE: All axles MUST BE installed with tires so chassis can be re-certified to new GAWR and GVWR ratings		
Watson & Chalin™ Options		
☐ Watson & Chalin™ Self Steering Pusher Axle: 13,500 pound capacity, hub piloted or 20" spoke wheel hubs, automatic slack adjusters, type 16 air chambers, steering stabilizer kit and reverse lift kit -		$ 11,958
☐ Watson & Chalin™ Self Steering Tag Axle: 13,500 pound capacity, hub piloted or 20" spoke wheel hubs, automatic slack adjusters, type 16 air chambers, steering stabilizer kit and reverse lift kit, includes Tag Axle Spill Shield		$ 12,288
☐ Watson & Chalin™ Rigid Pusher Axle: 25,000 pound capacity, hub piloted or 20" spoke wheel hubs, 30/30 brake chambers, automatic slack adjusters, 1,300 cubic inch air tank and regulator kit		$ 15,017
☐ Watson & Chalin™ Rigid Tag Axle: 25,000 pound capacity, hub piloted or 20" spoke wheel hubs, 30/30 brake chambers, automatic slack adjusters, 1,300 cubic inch air tank and regulator kit, includes Tag Axle Spill Shield		$ 15,337
Hendrickson™ Options		
☐ Hendrickson™ Pusher Axle-13.500 pound capacity, Non-Steerable		$ 12,041
☐ Hendrickson™ Pusher Axle-13.500 pound capacity, Steerable		$ 12,360
☐ Hendrickson™ Tag Axle-13.500 pound capacity, Steerable, includes Tag Axle Spill Shield		$ 12,360
☐ Hendrickson™ Tag Axle-13.500 pound capacity, Non- Steerable, includes Tag Axle Spill Shield		$ 12,041
☐ Hendrickson™ Steerable Pusher Axle: 20,000 pound capacity		$ 15,229
☐ Hendrickson™ Steerable Tag Axle: 20,000 pound capacity, includes Tag Axle Spill Shield		$ 15,548
* Note: All auxiliary applications must be approved by Heil prior to order acceptance		
Auxiliary Axle Tire Options		
☐ 255/70R-22.5 - Qty(2) load range H, 5,510 pound single max load at 120 psi with Steel Wheels		$ 2,379
☐ 275/70R-22.5 - Qty(2) load range H, 7,000 pound single max load at 120 psi with Steel Wheels		$ 3,008
☐ Upgrade to Polished Aluminum Wheels (Set of Two)		$ 1,545
Body Options		
☐ Sliding Top Door - Aluminum - May not be compatible with roof mounted CNG system		$ 5,155
☐ Sliding Top Door - Steel - May not be compatible with roof mounted CNG system		$ 4,656
☐ Tailgate Mounted Aluminum Roof Access Ladder (Only one selection allowed) Not Available with CNrG Tailgate option		$ 1,859
☐ CNrG Tailgate Mounted Aluminum Roof Access Ladder (only one selection allowed) * Not Available with STD Tailgate*		$ 1,859
☐ Tailgate Mounted Roof Access Ladder Steel (Only one selection allowed) *Not available with CNrG Tailgate Option*		$ 1,427
☐ Curbside Mounted Roof Access Ladder (Only one selection allowed) *Not Available on 23yd body with Top Door*		$ 1,427
☐ Hopper Floor Liner (3/16" - AR400)		$ 1,906
☐ Hopper Floor Liner (1/4" - AR400)		$ 3,033
☐ Body Floor Liner (3/16" - AR400)		$ 2,163
☐ Body Side Wall Liners (3/16 - AR400)		$ 1,854
☐ Packer Mounted Retainer Teeth		$ 773
☐ Body Roof Retainer Teeth - 2 Rows at the front of the body - Minimizes Spring Back In Cardboard and Recycling Applications		$ 1,107
☐ Packer Follower - Reduces Garbage/Recycle Behind the Packer **(Includes Inverted Style cab protector) Other cab protectors not compatible with this option.**		$ 1,674
☐ High Pressure Filter Kit		$ 958
☐ High Pressure Filter Monitor		$ 711
☐ 60 Gallon Washout Tank - side mounted - Not available with pusher axle		$ 2,153
☐ 60 Gallon Washout Tank - rear mounted - Not available with tag axle		$ 2,153
☐ Second 20 lb. Fire Extinguisher (Will be mounted to Curb side Hopper, if unable will be mounted under body)		$ 525
☐ Tool Box Bumper Mount - Steel - 18"x18"x24"		$ 814
☐ Tool Box Bumper Mount - Aluminum - 18"x18"x24"		$ 963
☐ Tool Box Bumper Mount - Poly - 18"x18"x24"		$ 731
☐ Extendable Broom Kit - Mounted Curbside of Body (Not Available on 20/23 Yd)		$ 438
☐ Extendable Broom Kit - Mounted Under Body		$ 438
☐ Street Side of Body Mounted Shovel Bracket Kit		$ 250
☐ Fork Stop Kit - Increases overall height 20" when forks are in the full dump position		$ 263
☐ Cab Protector Extension Raise - Manual Jack		$ 1,210
☐ Aluminum Cab Protector Extension For Autocar Chassis		$ 664
☐ Rear Caution Decal		$ 304
☐ Wheel Chock Kit - Dual (Mounted Under Body)		$ 170
☐ Wheel Chock Kit - Dual (Mounted on Curbside Body)		$ 170
☐ Cable Fall Protection Kit		$ 3,610
☐ D-Ring Fall Protection		$ 876
☐ Hydraulic Oil Tank Quick Disconnect Kit - For use with filter buggy		$ 865
☐ Service Loop Plumbing - Butterfly Style Quick Disconnects		$ 625
☐ Spill Kit included mounting brackets - (Mounted on Front Head)		$ 361
☐ Spill Kit (In Toolbox) *Requires additional purchase of a tool box*		$ 335
☐ Hydraulic Oil Tank Heater - 500 watts		$ 1,262
☐ Bolt On Fender Extension Kit - Keeps Body Clean of Road Spray		$ 773
☐ California Back Up Alarm		$ 716
☐ Infinity Series Packer/Eject Cylinders with scrapers and hardened rods to 50 HRC - Includes Five (5) Year Packer/Eject Cylinder Only Warranty (This Option is Required if purchasing extended warranty's below)		$ 3,245

2020 Half/Pack® Freedom High-Performance, Optimal Payload Front Loader -Sales Order Form			
	CNrG Tailgate Mounted CNG - Includes Installation Fee		
☐	60 DGE CNG System		$ 42,889
☐	75 DGE CNG System		$ 44,676
☐	90 DGE CNG System		$ 50,784
☐	105 DGE CNG System		$ 57,999
	FET Exempt CNrG Tailgate Mounted CNG For 20YD Bodies Only- Includes Installation Fee		
☐	60 DGE CNG System		$ 45,541
☐	75 DGE CNG System		$ 47,329
☐	90 DGE CNG System		$ 53,436
☐	105 DGE CNG System		$ 60,652
	CNrG Options		
☐	Front Bumper Fill with Kill Cap		$ 1,329
☐	Remote Fill, StreetSide Rear Fill Port		$ 2,318
☐	Remote Fill, Curbside Rear Fill Port		$ 2,318
☐	Defuel Transfer Hose - 35 ft.		$ 2,034
	CNG Installation - Top of Body Installation		
☐	CNG Installation Charge - Includes brackets, temporary tank rental, hardware, and mounting of CNG system		$ 5,969
	Extended Complete Body Warranty Options		
☐	Two (2) Year (Months 13-24) (Maximum 4,000 hrs. of Operation) Complete Heil Body Warranty Requires additional purchase of Infinity packer/eject cylinders from above		$ 4,671
☐	Three (3) Year (Months 13-36) (Maximum 6,000 hrs. of Operation) Complete Heil Body Warranty Requires additional purchase of Infinity packer/eject cylinders from above		$ 8,013
☐	Four (4) Year (Months 13-48) (Maximum 8,000 hrs. of Operation) Complete Heil Body Warranty Requires additional purchase of Infinity packer/eject cylinders from above		$ 11,284
☐	Five (5) Year (Months 13-60) (Maximum 10,000 hrs. of Operation) Complete Heil Body Warranty Requires additional purchase of Infinity packer/eject cylinders from above		$ 15,126
	Extended Cylinder Warranty Options		
☐	Two (2) Year (Months 13-24) (Maximum 4,000 hrs. of Operation) All other Non-Infinity Cylinder Warranty - Requires additional purchase of Infinity packer/eject cylinders from above		$ 1,030
☐	Three (3) Year (Months 13-36) (Maximum 6,000 hrs. of Operation) All other Non-Infinity Cylinder Warranty - Requires additional purchase of Infinity packer/eject cylinders from above		$ 2,065
☐	Four (4) Year (Months 13-48) (Maximum 8,000 hrs. of Operation) All other Non-Infinity Cylinder Warranty - Requires additional purchase of Infinity packer/eject cylinders from above		$ 3,095
☐	Five (5) Year (Months 13-60) (Maximum 10,000 hrs. of Operation) All other Non-Infinity Cylinder Warranty - Requires additional purchase of Infinity packer/eject cylinders from above		$ 3,605
	Extended Hydraulic Pump and Valve Warranty Options		
☐	Two (2) Year (Months 13-24) (Maximum 4,000 hours of operation) Hydraulic Pump and Valve warranty *Not needed if purchasing extended complete body warranty*		$ 1,246
☐	Three (3) Year (Months 13-36) (Maximum 6,000 hours of operation) Hydraulic Pump and Valve warranty *Not needed if purchasing extended complete body warranty*		$ 2,421
☐	Four (4) Year (Months 13-48) (Maximum 8,000 hours of operation) Hydraulic Pump and Valve warranty *Not needed if purchasing extended complete body warranty*		$ 3,600
☐	Five (5) Year (Months 13-60) (Maximum 10,000 hours of operation) Hydraulic Pump and Valve warranty *Not needed if purchasing extended complete body warranty*		$ 6,232
	Paint Options - NOTE: LIST PAINT CODES ON PAINT DIAGRAM		
☐	Customized Paint Color - Paint Color Code NOT included in the Color Smart Brochure		$ 417
☐	Two Tone Paint		$ 1,576
☐	Paint Striping - first stripe		$ 1,329
☐	Paint Striping - each additional stripe		$ 742
☐	Metallic Paint		$ 7,210
☐	Clear coat Finish		$ 1,844
☐	Anti-Graffiti Clear coat Finish		$ 2,652
☐	Prime Paint Only - deduct		$ (1,220)
☐	Heil CleanShield™ by BrandArmor™" Cab protector decal.		$ 1,432
TOTALS			
	Total from Options Above (MSRP)		$ -
	Additional Options (Custom's, Chassis Mods, Etc.) Total		
	Subtotal		$ -
	Dealer Discount (%)	0%	$ -
	Dealer Net Price		$ -
	Surcharge if Applicable		$ -
	Additional Discount (SPR)		
	Freight		
	Total Price per Unit	$	-

Return to Index Page

Half/Pack® Freedom

Paint Stripe and Accessory Requirements

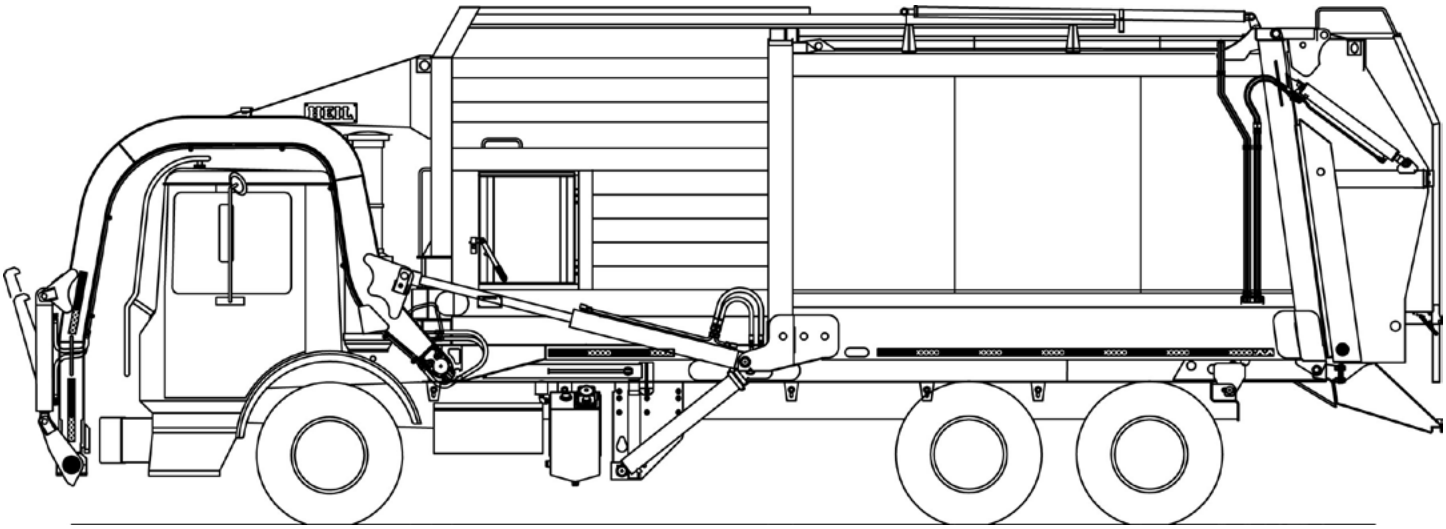

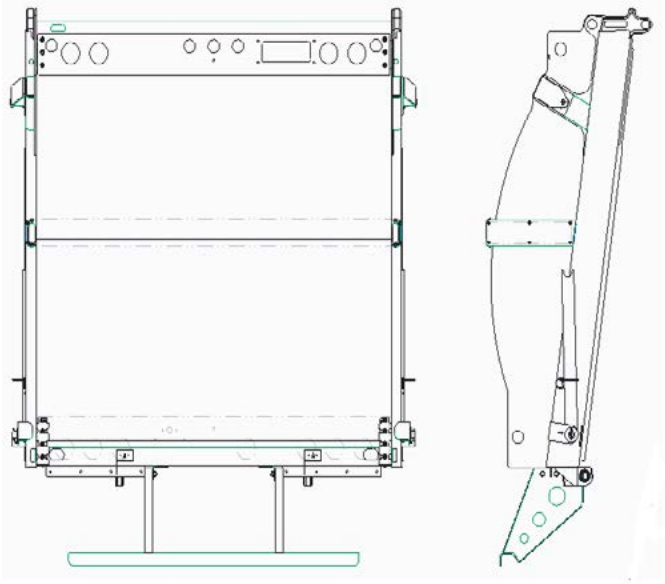

Paint and options layout detail
Use this form to describe paint schemes
Be specific about dimensions and details

Sales Order #		Submitted by	
Customer			
Paint Color 1			
Paint Color 2			
Paint Color 3			
Chassis Make			
Chassis Model			
Wheelbase			
Body Size		Approved by	

Half/Pack ®

Featuring Odyssey™ Controls

WE NEVER STOP WORKING FOR YOU

Curotto-Can automated carry can sold separately

Standard Equipment Features included in Base Price

- Hinged and completely sealed left-side body access door with step and grab handle
- Cab shield with hinged rubber tip extension - steel
- Front head closure screen with splash guard
- 3” underbody gate valve on street side for liquid removal
- Body service props
- Tailgate service props
- Fully automatic Shur-Lock™ tailgate latches
- Clamp-on arms
- 8,000 lb. capacity arms - WASTEC WRP 06-1996 rated
- Four arm shaft bearing supports
- Fork cross shaft rubber bumpers
- Bolt-on rubber arm stops
- Heavy-duty forks - 1 1/2” thick x 63” grip length
- Forward-facing floodlights on cab
- Crossed packing cylinders
- Chassis frame-mounted oil tank with level / temperature gauge and suction shut-off valve
- 3-micron return line filter with magnetic trap and in-cab filter bypass monitor
- 100-micron suction line strainer
- Abrasion-resistant hydraulic hoses
- Cortex Controller ™ with InSight™ diagnostic display with integrated 3rd Eye camera feed
- Throttle advance / throttle limit kit
- Left and right-hand multifunction joystick
- Complete array of in-cab function indicator lights on in cab display
- Streetwise Hydraulics™
- Solid-state control panel
- High-pressure filter kit
- Arm rest for operator controls
- Cavity coat and joint sealer
- 5 lb. in-cab fire extinguisher
- Backup alarm
- LED mid-body turn signals
- Strobe light, amber mounted on lower tailgate - in-cab switch, pump on, and reverse activated
- Front and rear mud flaps - anti-sail / anti-splash
- Rear under ride guard
- Hopper floodlight
- Tailgate lock & closed indicator sensor with in-cab indicator and alarm
- Low oil level sensor with light, buzzer, and pump shut-off
- Severe-duty wear bar kit
- Upper arm reinforcement
- Arm/fork over height warning kit
- PTO mounted load sense piston pump with hot shift PTO
- Hydraulic arm tube covers
- Remote I/O for tailgate valve and Curotto-Can
- Greaseless tailgate hinge and lift cylinders
- Hydraulic oil temperature sensor with alarm
- Body hydraulic pressure sensor
- 20 lb. fire extinguisher
- FMVSS #108 clearance lights and reflectors
- ICC reflective tape
- Rear camera bracket and flood lights - reverse activated
- Body undercoating
- Customer’s choice of one color finish paint from Color Smart brochure
- Standard 1-year warranty (2,000 Hours of Operation)
- ANSI Z 245.1-2017 compliant
- Safety triangle
- Arm guides mounted to front bumper
- Chrome-plated cylinder rods
- Remote lube for center arm bearing blocks
- Push Button controls with expanded system status notification
- Zinc Plated Hydraulic Tubes

Return to Index Page

2020 Half/Pack ® Featuring Odyssey™ Controls Sales Order Form

Base Units Half/Pack ® Featuring Odyssey™ Controls		
☐ 20 cubic yard		$ 137,166
☐ 23 cubic yard		$ 136,499
☐ 28 cubic yard		$ 137,166
☐ 32 cubic yard		$ 140,871
☐ Add Sumps to Body		$ 742
☐ Service Hoist Kit - 187" Wheelbase 5 Axle Units WILL NOT accept the service hoist option*		$ 4,656
*5 Axle 187" Wheelbase - Hendrickson Auxiliary Axles Only with 275/R70/22.5 or smaller tires.		
CHASSIS MUST COMFORM WITH HEIL'S MOST CURRENT CHASSIS SPECIFICATIONS AT WWW.HEIL.COM		
Mounting Options		
☐ Full Factory Mount for Service Hoist or Serviceable Eject - Includes Body Props and Rear Pivot		$ 5,840
☐ Mount at Dealer Destination		$ 783
Power Take Off / Pump Options		
☐ PTO Mounted Load Sense Piston pump - Includes PTO		STD
Automated Option		
☐ Hopper Seal Brush Kit - Includes Sides, Front, and Rear Bristle Hopper Seal Kit - For Curotto Only		$ 2,724
☐ Remote Curbside Curotto Can Controls		$ 1,643
☐ Installation of Auto cover controls - Auto cover must be purchased with the Curotto Can		$ 1,643
☐ In-Cab controls for integrated forward work lamps - Forward Work lamps must be purchased with the Curotto Can		$ 664
☐ Hose Conversion Kit - Must be selected if utilizing a Curotto Can Built prior to 1/1/2018		STD If Needed
Semi/Automated Option		
☐ Curotto Can Control Kit - Must Select to Add Controls to Order		$ -
☐ Bayne Carry Can Control Kit - Must Select to Add Controls to Order		$ -
A complete selection of premium Bayne carry cans to suit any application is provided in this price book for your convenience		
Control Options		
☐ Dual Multifunction Joystick - Left and Right Hand		STD
☐ Left Hand 2-Lever Electric Control in lieu of Multifunction Joystick		$ 572
☐ Left Hand Dual Axis Joystick Electric Control in lieu of Multifunction Joystick		$ 572
☐ StreetSide mounted Outside 4 Button Electric Push Button Controls for Arms, Forks, and Packer circuits. (Throttle Advance Not Included)		$ 2,477
☐ StreetSide mounted Outside Dual Lever controls and 4 Button Electric Push Button Controls for Pump Enable, Arms, Forks, and Packer circuits. Includes Throttle advance.		$ 2,884
☐ Upgrade to **12"** In Cab Display in lieu of **7"** Std (Non- 3rd Eye Camera Units Only) - See 3rd Eye below for 12" Display with camera options)		$ 1,000
Lighting and Electrical Accessories		
☐ Single Led Windscreen Mounted Container Light		$ 628
☐ Multi-Function Lights		$ 649
☐ Body Side Backing Assist Lights - LED		$ 536
☐ Dual Oval Flat LED Strobes Mounted Mid-T/G - in-cab switch, pump on, and reverse activated		$ 1,123
☐ Dual Cab Guard Mounted LED Lights		$ 525
☐ Preco™ Back Up Alarm		$ 773
☐ Dual LED Cab Mounted Oval Strobe Lights		$ 770
☐ Whelen Strobe Lights Kit		$ 3,750
☐ Cab Shield Mounted LED Light Facing reward toward hopper opening		$ 628
AWTI ™ Radar Systems		
☐ AWTI™ Radar System used in conjunction with 3rd Eye Cameras - Must Select Camera Kit From 3rd Eye Camera Options		$ 2,359
Camera Systems		
All camera systems are mounted with protective camera brackets and twin tailgate flood lights.		
CAMERA MONITOR LOCATION WILL BE CAB ROOF MOUNTED - Swivel monitor bracket will be provided for dual drive chassis		
3rd Eye® Camera Systems & 3rd® Eye Digital		
Note: Camera systems will accommodate a maximum of 6 cameras, not including driver and forward facing cameras included in 3rd Eye® Digital system		
☐ Base 3rd Eye® Single Camera System with **7"** Monitor and Single Camera Mounted on Tailgate		$ 2,148
☐ Upgraded base 3rd Eye® Single Camera System with **12"** Monitor and Single Camera Mounted on Tailgate		$ 3,148
☐ Add on 3rd Eye® Camera (LH Cab) - Camera System Price Adder (Only available if base camera is selected)		$ 572
☐ Add on 3rd Eye® Camera (RH Cab) - Camera System Price Adder (Only available if base camera is selected)		$ 572
☐ Add on 3rd Eye® Camera (LH Alley) - Camera System Price Adder (Only available if base camera is selected)		$ 572
☐ Add on 3rd Eye® Camera (RH Alley) - Camera System Price Adder (Only available if base camera is selected)		$ 572
☐ Add on 3rd Eye® Camera (Hopper) - Camera System Price Adder (Only available if base camera is selected)		$ 572
☐ 3rd Eye® Digital System: Includes (Driver and Forward Facing Camera (Window Unit), and Gateway - (In-Cab Monitor Not Included) - *Digital monitoring service not included and must be purchased and activated though 3rd Eye post delivery *		$ 3,317
Load Cell Scale Systems		
☐ Heil Optimum Payload System (HOPS) using Air-Weigh Axle Scales		$ 9,275
☐ Air-Weigh™ Axle Scale System without Interlock		$ 8,652
Auxiliary Axles Options		
* NOTE: All axles MUST BE installed with tires so chassis can be re-certified to new GAWR and GVWR ratings		
Watson & Chalin™ Options		
☐ Watson & Chalin™ Self Steering Pusher Axle: 13,500 pound capacity, hub piloted or 20" spoke wheel hubs, automatic slack adjusters, type 16 air chambers, steering stabilizer kit and reverse lift kit -		$ 11,958
☐ Watson & Chalin™ Self Steering Tag Axle: 13,500 pound capacity, hub piloted or 20" spoke wheel hubs, automatic slack adjusters, type 16 air chambers, steering stabilizer kit and reverse lift kit, includes Tag Axle Spill Shield		$ 12,288
☐ Watson & Chalin™ Rigid Pusher Axle: 25,000 pound capacity, hub piloted or 20" spoke wheel hubs, 30/30 brake chambers, automatic slack adjusters, 1,300 cubic inch air tank and regulator kit		$ 15,017
☐ Watson & Chalin™ Rigid Tag Axle: 25,000 pound capacity, hub piloted or 20" spoke wheel hubs, 30/30 brake chambers, automatic slack adjusters, 1,300 cubic inch air tank and regulator kit, includes Tag Axle Spill Shield		$ 15,337
Hendrickson™ Options		
☐ Hendrickson™ Pusher Axle-13.500 pound capacity, Non-Steerable		$ 12,041
☐ Hendrickson™ Pusher Axle-13.500 pound capacity, Steerable		$ 12,360
☐ Hendrickson™ Tag Axle-13.500 pound capacity, Steerable, includes Tag Axle Spill Shield		$ 12,360
☐ Hendrickson™ Tag Axle-13.500 pound capacity, Non- Steerable, includes Tag Axle Spill Shield		$ 12,041
☐ Hendrickson™ Steerable Pusher Axle: 20,000 pound capacity		$ 15,229
☐ Hendrickson™ Steerable Tag Axle: 20,000 pound capacity, includes Tag Axle Spill Shield		$ 15,548
* Note: All auxiliary applications must be approved by Heil prior to order acceptance		
Auxiliary Axle Tire Options		
☐ 255/70R-22.5 - Qty(2) load range H, 5,510 pound single max load at 120 psi with Steel Wheels		$ 2,379
☐ 275/70R-22.5 - Qty(2) load range H, 7,000 pound single max load at 120 psi with Steel Wheels		$ 3,008
☐ Upgrade to Polished Aluminum Wheels (Set of Two)		$ 1,545

2020 Half/Pack ® Featuring Odyssey™ Controls Sales Order Form

	Body Options	
☐	Sliding Top Door - Aluminum - May not be compatible with roof mounted CNG system	$ 5,155
☐	Sliding Top door - Steel - May not be compatible with roof mounted CNG systems	$ 4,656
☐	Tailgate Mounted Aluminum Roof Access Ladder (Only one selection allowed) Not Available with CNrG Tailgate option	$ 1,859
☐	Tailgate Mounted Roof Access Ladder Steel (Only one selection allowed) *Not available with CNrG Tailgate Option*	$ 1,427
☐	CNrG Tailgate Mounted Aluminum Roof Access Ladder (only one selection allowed) * Not Available with STD Tailgate*	$ 1,859
☐	Curbside Mounted Roof Access Ladder (Only one selection allowed) *Not Available on 23yd body with Top Door*	$ 1,427
☐	Hopper Floor Liner (3/16" - AR400)	$ 1,906
☐	Hopper Floor Liner (1/4" - AR400)	$ 3,033
☐	Body Floor Liner (3/16" - AR400)	$ 2,163
☐	Body Side Wall Liners (3/16 - AR400)	$ 1,854
☐	Packer Mounted Retainer Teeth	$ 773
☐	Body Roof Retainer Teeth - 2 Rows at the front of the body - Minimizes Spring Back In Cardboard and Recycling Applications	$ 1,107
☐	Packer Follower - Reduces Garbage/Recycle Behind the Packer **(Includes Inverted Style cab protector) Other cab protectors not compatible with this option.**	$ 1,674
☐	High Pressure Filter Monitor	$ 711
☐	Second 20 lb. Fire Extinguisher (Will be mounted to Curb side Hopper, if unable will be mounted under body)	$ 525
☐	Tool Box Bumper Mount - Steel 18"x18"x24"	$ 814
☐	Tool Box Bumper Mount - Aluminum 18"x18"x24"	$ 963
☐	Tool Box Bumper Mount - Poly - 18"x18"x24"	$ 731
☐	Extendable Broom Kit - Mounted Curbside of Body (Not Available on 20/23 Yd)	$ 438
☐	Extendable Broom Kit - Mounted Under Body	$ 438
☐	Street Side of Body Mounted Shovel Bracket Kit	$ 250
☐	Cab Protector Extension Raise - Manual Jack - Will Change Cab Protector to Steel	$ 1,210
☐	Hydraulic Raise Cab Protector Kit - Cab Shield Fully Rotates into the Hopper	$ 5,660
☐	Aluminum Cab Protector	$ 2,256
☐	Aluminum Cab Protector Extension For Autocar Chassis	$ 664
☐	Rear Caution Decal	$ 304
☐	Wheel Chock Kit - Dual (Mounted Under Body)	$ 170
☐	Wheel Chock Kit - Dual (Mounted on Curbside Body)	$ 170
☐	Cable Fall Protection Kit	$ 3,610
☐	D-Ring Fall Protection	$ 876
☐	Hydraulic Oil Tank Quick Disconnect Kit - For use with filter buggy	$ 865
☐	Service Loop Plumbing - Butterfly Style Quick Disconnects	$ 625
☐	Spill Kit included mounting brackets - (Mounted on Front Head)	$ 361
☐	Spill Kit (In Toolbox) *Requires additional purchase of a tool box*	$ 335
☐	Hydraulic Oil Tank Heater - 500 watts	$ 1,262
☐	Bolt On Fender Extension Kit - Keeps Body Clean of Road Spray	$ 773
☐	California Back Up Alarm	$ 716
☐	Infinity Series Packer/Eject Cylinders with scrapers and hardened rods to 50 HRC - Includes Five (5) Year Packer/Eject Cylinder Only Warranty that covers dents and dings (This Option is Required if purchasing extended warranty's below)	$ 3,245
☐	Lightning Cylinder Package: reduces front loader arm cycle time by up to 5 seconds and reduces front loader arm lifting capacity to a maximum of 5,500 lbs. This package is available via Custom request only, and also requires an End User signed waiver acknowledging the reduced arm lifting capacity of these cylinders.	(Custom Required)
	CNrG Tailgate Mounted CNG - Includes Installation Fee	
☐	60 DGE CNrG System	$ 42,889
☐	75 DGE CNrG System	$ 44,676
☐	90 DGE CNrG System	$ 50,784
☐	105 DGE CNrG System	$ 57,999
	FET Exempt CNrG Tailgate Mounted CNG For 20YD Bodies Only- Includes Installation Fee	
☐	60 DGE CNG System	$ 45,541
☐	75 DGE CNG System	$ 47,329
☐	90 DGE CNG System	$ 53,436
☐	105 DGE CNG System	$ 60,652
	CNrG Options	
☐	Front Bumper Fill with Kill Cap	$ 1,329
☐	Remote Fill, StreetSide Rear Fill Port	$ 2,318
☐	Remote Fill, Curbside Rear Fill Port	$ 2,318
☐	Defuel Transfer Hose - 35 ft.	$ 2,034
	CNG Installation - Top of Body Installation	$ -
☐	CNG Installation Charge - Includes brackets, temporary tank rental, hardware, and mounting of CNG system	$ 5,969
	Extended Complete Body Warranty Options	
☐	Two (2) Year (Months 13-24) (Maximum 4,000 hrs. of Operation) Complete Heil Body Warranty Requires additional purchase of Infinity packer/eject cylinders from above	$ 4,671
☐	Three (3) Year (Months 13-36) (Maximum 6,000 hrs. of Operation) Complete Heil Body Warranty Requires additional purchase of Infinity packer/eject cylinders from above	$ 8,013
☐	Four (4) Year (Months 13-48) (Maximum 8,000 hrs. of Operation) Complete Heil Body Warranty Requires additional purchase of Infinity packer/eject cylinders from above	$ 11,284
☐	Five (5) Year (Months 13-60) (Maximum 10,000 hrs. of Operation) Complete Heil Body Warranty Requires additional purchase of Infinity packer/eject cylinders from above	$ 15,126
	Extended Cylinder Warranty Options	
☐	Two (2) Year (Months 13-24) (Maximum 4,000 hrs. of Operation) All other Non-Infinity Cylinder Warranty - Requires additional purchase of Infinity packer/eject cylinders from above	$ 1,030
☐	Three (3) Year (Months 13-36) (Maximum 6,000 hrs. of Operation) All other Non-Infinity Cylinder Warranty - Requires additional purchase of Infinity packer/eject cylinders from above	$ 2,065
☐	Four (4) Year (Months 13-48) (Maximum 8,000 hrs. of Operation) All other Non-Infinity Cylinder Warranty - Requires additional purchase of Infinity packer/eject cylinders from above	$ 3,095
☐	Five (5) Year (Months 13-60) (Maximum 10,000 hrs. of Operation) All other Non-Infinity Cylinder Warranty - Requires additional purchase of Infinity packer/eject cylinders from above	$ 3,605
	Extended Hydraulic Pump and Valve Warranty Options	
☐	Two (2) Year (Months 13-24) (Maximum 4,000 hours of operation) Hydraulic Pump and Valve warranty *Not needed if purchasing extended complete body warranty*	$ 1,246
☐	Three (3) Year (Months 13-36) (Maximum 6,000 hours of operation) Hydraulic Pump and Valve warranty *Not needed if purchasing extended complete body warranty*	$ 2,421
☐	Four (4) Year (Months 13-48) (Maximum 8,000 hours of operation) Hydraulic Pump and Valve warranty *Not needed if purchasing extended complete body warranty*	$ 3,600
☐	Five (5) Year (Months 13-60) (Maximum 10,000 hours of operation) Hydraulic Pump and Valve warranty *Not needed if purchasing extended complete body warranty*	$ 6,232

2020 Half/Pack ® Featuring Odyssey™ Controls Sales Order Form			
	Paint Options		
NOTE: LIST PAINT CODES ON PAINT DIAGRAM			
☐	Customized Paint Color - Paint Color Code NOT included in the Color Smart Brochure		$ 417
☐	Two Tone Paint		$ 1,576
☐	Paint Striping - first stripe		$ 1,329
☐	Paint Striping - each additional stripe		$ 742
☐	Metallic Paint		$ 7,210
☐	Clear coat Finish		$ 1,844
☐	Anti-Graffiti Clear coat Finish		$ 2,652
☐	Prime Paint Only - deduct		$ (1,220)
☐	Heil CleanShield™ by BrandArmor™" Cab protector decal.		$ 1,432
	TOTALS		
	Total from Options Above (MSRP)		$ -
	Additional Options (Custom's, Chassis Mods, Etc.) Total		
	Subtotal		$ -
	Dealer Discount (%)	0%	$ -
	Dealer Net Price		$ -
	Surcharge if Applicable		$ -
	Additional Discount (SPR)		
	Freight		
	Total Price per Unit		$ -

Return to Index Page

Half/Pack ® featuring Odyssey™ Controls

Paint Stripe and Accessory Requirements

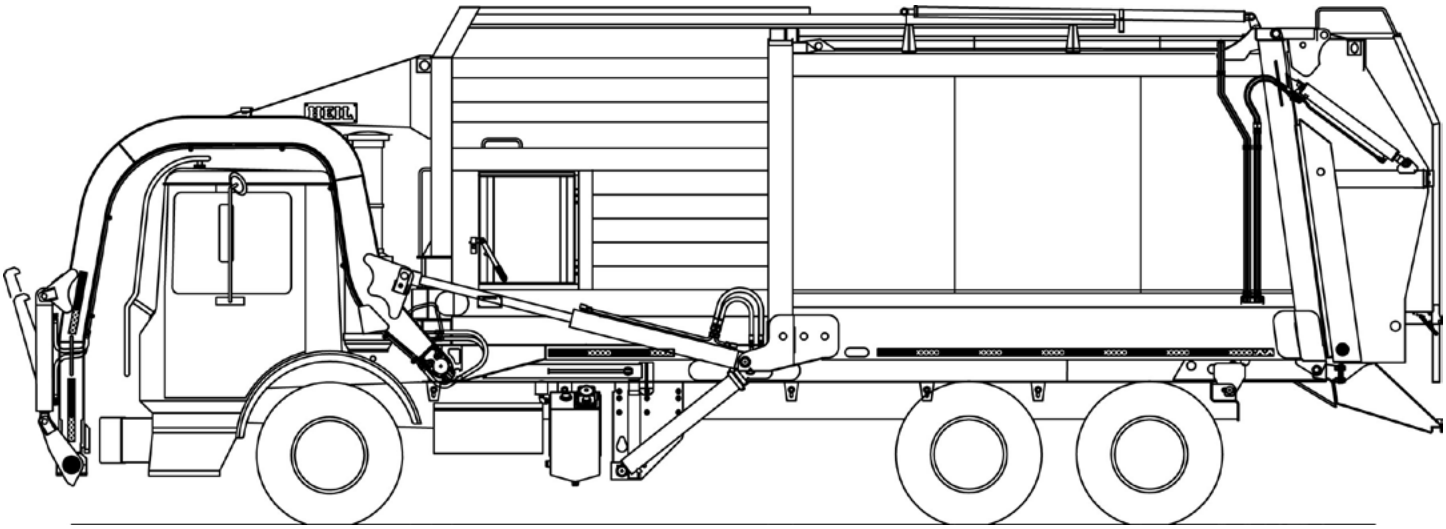

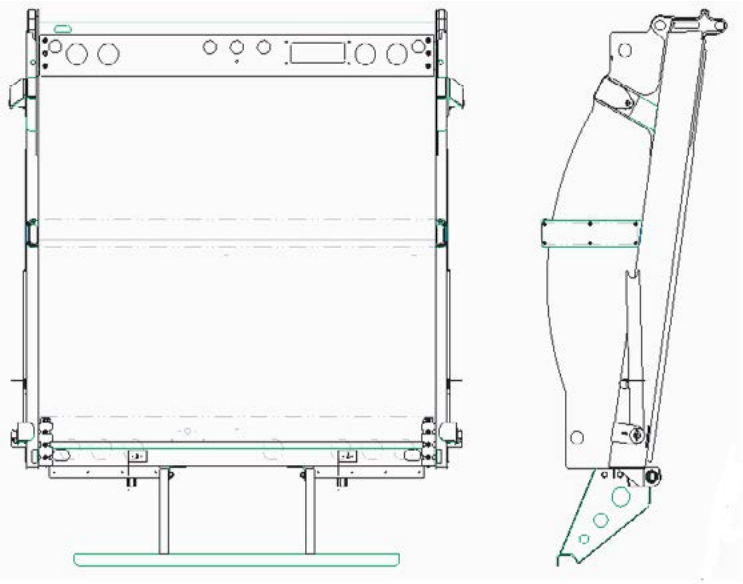

Paint and options layout detail
Use this form to describe paint schemes
Be specific about dimensions and details

Sales Order #		Submitted by	
Customer			
Paint Color 1			
Paint Color 2			
Paint Color 3			
Chassis Make			
Chassis Model			
Wheelbase			
Body Size		Approved by	

Half/Pack® Sierra

Featuring Odyssey ™ Controls

**Curotto-Can automated carry can sold separately

Standard Equipment Features included in Base Price

- Hinged and completely sealed left-side body access door with step and grab handle
- Full aluminum cab shield with air cylinder assisted raise
- 3” underbody gate valve on street side for liquid removal
- Body service props
- Tailgate service props
- Fully automatic Shur-Lock™ tailgate latches
- Clamp-on arms
- 8,000 lb. capacity arms - WASTEC WRP 06-1996 rated
- Four arm shaft bearing supports
- Fork cross shaft rubber bumpers
- Bolt-on rubber arm stops
- Heavy-duty forks - 1 1/2” thick x 63” grip length
- Crossed packing cylinders
- Remote I/O for tailgate valve and Curotto-Can
- Chassis frame-mounted oil tank with level / temperature gauge and suction shut-off valve
- 3-micron return line filter with magnetic trap and in-cab filter bypass monitor
- 100-micron suction line strainer
- Abrasion-resistant hydraulic hoses
- Cortex Controller ™ with InSight™ diagnostic display with integrated 3rd Eye camera feed
- Throttle advance / throttle limit kit
- Left and right-hand multifunction joysticks
- Complete array of in-cab function indicator lights on in cab display
- 5 lb. in-cab fire extinguisher
- Tailgate lock & closed indicator sensor with in-cab indicator and alarm
- PTO mounted load sense piston pump with hot shift PTO
- Hydraulic arm tube covers
- Cavity coat and joint sealer
- Remote lube for center arm bearing blocks
- Push Button controls with expanded system status notification
- Zinc Plated Hydraulic Tubes
- Greaseless tailgate hinge and lift cylinders
- Hydraulic oil temperature sensor with alarm
- Body hydraulic pressure sensor
- Streetwise Hydraulics™
- Backup alarm
- Hopper floodlight
- Severe-duty wear bar kit
- Arm guides mounted on front bumper
- Remote packer lube kit
- Shovel kit mounted on back of the packer
- Arm / fork over height warning kit
- Backup and license plate light
- LED center-mounted brake light
- LED duplicate high and low mount stop, turn, and tail lights
- LED mid-body turn signals
- Strobe light, amber mounted on lower tailgate - in-cab switch, pump on, and reverse activated
- Front and rear mud flaps - anti-sail / anti-splash
- Rear under ride guard
- 20 lb. fire extinguisher
- FMVSS #108 clearance lights and reflectors
- ICC reflective tape
- Rear camera bracket and flood lights - reverse activated
- Body undercoating
- Customer’s choice of one color finish paint from Color Smart brochure
- Standard 1-year warranty (2,000 Hours of Operation)
- ANSI Z 245.1-2017 compliant
- Forward-facing floodlights on cab
- Upper arm reinforcement
- High pressure filter
- Chrome-plated cylinder rods

Return to Index Page

2020 Half/Pack® Sierra Featuring Odyssey ™ Controls - Sales Order Form	
Base Units Half/Pack® Sierra Featuring Odyssey ™ Controls	
20 cubic yard	$ 147,439
23 cubic yard	$ 146,734
28 cubic yard	$ 147,439
Add Sumps to Body	$ 742
Service Hoist Kit - 187" Wheelbase 5 Axle Units WILL NOT accept the service hoist option*	$ 4,656
*5 Axle 187" Wheelbase - Hendrickson Auxiliary Axles Only with 275/R70/22.5 or smaller tires.	
Hopper Size	12 yd³
CHASSIS MUST COMFORM WITH HEIL'S MOST CURRENT CHASSIS SPECIFICATIONS AT WWW.HEIL.COM	
Mounting Options	
Full Factory Mount for Service Hoist or Serviceable Eject - Includes Body Props and Rear Pivot	$ 5,840
Mount at Dealer Destination	$ 783
Power Take Off / Pump Options	
PTO Mounted Load Sense Piston pump - Includes PTO	STD
Automated Option	
Hopper Seal Brush Kit - Includes Sides, Front, and Rear Bristle Hopper Seal Kit - For Curotto Only	$ 2,724
Remote Curbside Curotto Can Controls	$ 1,643
Installation of Auto cover controls - Auto cover must be purchased with the Curotto Can	$ 1,643
In-Cab controls for integrated forward work lamps - Forward Work lamps must be purchased with the Curotto Can	$ 664
Hose Conversion Kit - Must be selected if utilizing a Curotto Can Built prior to 1/1/2018	If Needed
Semi-Automated Option	
Curotto Can Control Kit - Must Select to Add Controls to Order	$ -
Bayne Carry Can Control Kit - Must Select to Add Controls to Order	$ -
A complete selection of premium Bayne carry cans to suit any application is provided in this price book for your convenience	
Control Options	
Dual Multifunction Joystick - Left and Right Hand	STD
Left Hand 2-Lever Electric Control in lieu of Multifunction Joystick	$ 572
Left Hand Dual Axis Joystick Electric Control in lieu of Multifunction Joystick	$ 572
StreetSide mounted Outside 4 Button Electric Push Button for Arms, Forks, and Packer circuits. (Throttle Advance Not Included)	$ 2,477
StreetSide mounted Outside Dual Lever controls and 4 Button Electric Push Button Controls for Pump Enable, Arms, Forks, and Packer circuits. Includes Throttle advance.	$ 2,884
Upgrade to **12"** In Cab Display in lieu of **7"** Std (Non- 3rd Eye Camera Units Only) - See 3rd Eye below for 12" Display with camera options)	$ 1,000
Lighting and Electrical Accessories	
Single LED Windscreen Mounted Container Light	$ 628
Multi-Function LED Strobe / Turn Lamps	$ 649
Body Side Backing Assist Lights - LED	$ 536
Dual Oval Flat LED Strobes Mounted Mid-T/G - in-cab switch, pump on, and reverse activated	$ 1,123
Dual Cab Guard Mounted LED Lights	$ 525
Preco™ Back Up Alarm	$ 773
Dual LED Cab Mounted Oval Strobe Lights	$ 770
Whelen Strobe Lights Kit	$ 3,750
Cab Shield Mounted LED Light Facing reward toward hopper opening	$ 628
AWTI ™ Radar Systems	
AWTI™ Radar System used in conjunction with 3rd Eye Cameras -Must Select Camera Kit From 3rd Eye Camera Options	$ 2,359
3rd Eye® Camera Systems & 3rd® Eye Digital	
Note: Camera systems will accommodate a maximum of 6 cameras, not including driver and forward facing cameras included in 3rd Eye® Digital system	
Base 3rd Eye® Single Camera System with **7"** Monitor and Single Camera Mounted on Tailgate	$ 2,148
Upgraded base 3rd Eye® Single Camera System with **12"** Monitor and Single Camera Mounted on Tailgate	$ 3,148
Add on 3rd Eye® Camera (LH Cab) - Camera System Price Adder (Only available if base camera is selected)	$ 572
Add on 3rd Eye® Camera (RH Cab) - Camera System Price Adder (Only available if base camera is selected)	$ 572
Add on 3rd Eye® Camera (LH Alley) - Camera System Price Adder (Only available if base camera is selected)	$ 572
Add on 3rd Eye® Camera (RH Alley) - Camera System Price Adder (Only available if base camera is selected)	$ 572
Add on 3rd Eye® Camera (Hopper) - Camera System Price Adder (Only available if base camera is selected)	$ 572
3rd Eye® Digital System: Includes (Driver and Forward Facing Camera (Window Unit), and Gateway - (In-Cab Monitor Not Included) - *Digital monitoring service not included and must be purchased and activated though 3rd Eye post delivery *	$ 3,317
Load Cell Scale Systems	
Heil Optimum Payload System (HOPS) using Air-Weigh Axle Scales	$ 9,275
Air-Weigh Axle Scale System without Interlock	$ 8,652
Auxiliary Axles Options	
* NOTE: All axles MUST BE installed with tires so chassis can be re-certified to new GAWR and GVWR ratings	
Watson & Chalin™ Options	
Watson & Chalin™ Steering Pusher Axle: 13,500 pound capacity, hub piloted or 20" spoke wheel hubs, automatic slack adjusters, type 16 air chambers, steering stabilizer kit and reverse lift kit -	$ 11,958
Watson & Chalin™ Self Steering Tag Axle: 13,500 pound capacity, hub piloted or 20" spoke wheel hubs, automatic slack adjusters, type 16 air chambers, steering stabilizer kit and reverse lift kit, includes Tag Axle Spill Shield	$ 12,288
Watson & Chalin™ Rigid Pusher Axle: 25,000 pound capacity, hub piloted or 20" spoke wheel hubs, 30/30 brake chambers, automatic slack adjusters, 1,300 cubic inch air tank and regulator kit	$ 15,017
Watson & Chalin™ Rigid Tag Axle: 25,000 pound capacity, hub piloted or 20" spoke wheel hubs, 30/30 brake chambers, automatic slack adjusters, 1,300 cubic inch air tank and regulator kit, includes Tag Axle Spill Shield	$ 15,337
Hendrickson™ Options	
Hendrickson™ Pusher Axle-13.500 pound capacity, Non-Steerable	$ 12,041
Hendrickson™ Pusher Axle-13.500 pound capacity, Steerable	$ 12,360
Hendrickson™ Tag Axle-13.500 pound capacity, Steerable, includes Tag Axle Spill Shield	$ 12,360
Hendrickson™ Tag Axle-13.500 pound capacity, Non- Steerable, includes Tag Axle Spill Shield	$ 12,041
Hendrickson™ Steerable Pusher Axle: 20,000 pound capacity	$ 15,229
Hendrickson™ Steerable Tag Axle: 20,000 pound capacity, includes Tag Axle Spill Shield	$ 15,548
* Note: All auxiliary applications must be approved by Heil prior to order acceptance	
Auxiliary Axle Tire Options	
255/70R-22.5 - Qty(2) load range H, 5,510 pound single max load at 120 psi with Steel Wheels	$ 2,379
275/70R-22.5 - Qty(2) load range H, 7,000 pound single max load at 120 psi with Steel Wheels	$ 3,008
Upgrade to Polished Aluminum Wheels (Set of Two)	$ 1,545

2020 Half/Pack® Sierra Featuring Odyssey ™ Controls - Sales Order Form

	Body Options	
☐	Sliding Top Door - Aluminum - May not be compatible with roof mounted CNG system	$ 5,155
☐	Sliding Top door - Steel - May not be compatible with roof mounted CNG systems	$ 4,656
☐	Tailgate Mounted Aluminum Roof Access Ladder (Only one selection allowed) Not Available with CNrG Tailgate option	$ 1,859
☐	Tailgate Mounted Roof Access Ladder Steel (Only one selection allowed) *Not available with CNrG Tailgate Option*	$ 1,427
☐	CNrG Tailgate Mounted Aluminum Roof Access Ladder (only one selection allowed) * Not Available with STD Tailgate*	$ 1,859
☐	Curbside Mounted Roof Access Ladder (Only one selection allowed) *Not Available on 23yd body with Top Door*	$ 1,427
☐	Hopper Floor Liner (3/16" - AR400)	$ 1,906
☐	Hopper Floor Liner (1/4" - AR400)	$ 3,033
☐	Body Floor Liner (3/16" - AR400)	$ 2,163
☐	Body Side Wall Liners (3/16 - AR400)	$ 1,854
☐	Packer Mounted Retainer Teeth	$ 773
☐	Body Roof Retainer Teeth - 2 Rows at the front of the body - Minimizes Spring Back In Cardboard and Recycling Applications	$ 1,107
☐	Packer Follower - Reduces Garbage/Recycle Behind the Packer (Includes Inverted Style cab protector) Other cab protectors not compatible with this option.	$ 1,674
☐	High Pressure Filter Monitor	$ 711
☐	Second 20 lb. Fire Extinguisher (Will be mounted to Curb side Hopper, if unable will be mounted under body)	$ 525
☐	Tool Box Bumper Mount - Steel 18"x18"x24"	$ 814
☐	Tool Box Bumper Mount - Aluminum 18"x18"x24"	$ 963
☐	Tool Box Bumper Mount - Poly - 18"x18"x24"	$ 731
☐	Extendable Broom Kit - Mounted Curbside of Body (Not Available on 20/23 Yd)	$ 438
☐	Extendable Broom Kit - Mounted Under Body	$ 438
☐	Street Side of Body Mounted Shovel Bracket Kit	$ 250
☐	Cab Protector Extension Raise - Manual Jack - Will Change Cab Protector to Steel	$ 1,210
☐	Hydraulic Raise Cab Protector Kit - Cab Shield Fully Rotates into the Hopper	$ 5,660
☐	Steel Cab Protector	$ 2,009
☐	Aluminum Cab Protector Extension For Autocar Chassis	$ 664
☐	Rear Caution Decal	$ 304
☐	Wheel Chock Kit - Dual (Mounted Under Body)	$ 170
☐	Wheel Chock Kit - Dual (Mounted on Curbside Body)	$ 170
☐	Cable Fall Protection Kit	$ 3,610
☐	D-Ring Fall Protection	$ 876
☐	Hydraulic Oil Tank Quick Disconnect Kit - For use with filter buggy	$ 865
☐	Service Loop Plumbing - Butterfly Style Quick Disconnects	$ 625
☐	Spill Kit included mounting brackets - (Mounted on Front Head)	$ 361
☐	Spill Kit (In Toolbox) *Requires additional purchase of a tool box*	$ 335
☐	Hydraulic Oil Tank Heater - 500 watts	$ 1,262
☐	Bolt On Fender Extension Kit - Keeps Body Clean of Road Spray	$ 773
☐	California Back Up Alarm	$ 716
☐	Infinity Series Packer/Eject Cylinders with scrapers and hardened rods to 50 HRC - Includes Five (5) Year Packer/Eject Cylinder Only Warranty that covers dents and dings (This Option is Required if purchasing extended warranty's below)	$ 3,245
☐	Lightning Cylinder Package: reduces front loader arm cycle time by up to 5 seconds and reduces front loader arm lifting capacity to a maximum of 5,500 lbs. This package is available via Custom request only, and also requires an End User signed waiver acknowledging the reduced arm lifting capacity of these cylinders.	(Custom Required)
	CNrG Tailgate Mounted CNG - Includes Installation Fee	
☐	60 DGE CNrG System	$ 42,889
☐	75 DGE CNrG System	$ 44,676
☐	90 DGE CNrG System	$ 50,784
☐	105 DGE CNrG System	$ 57,999
	FET Exempt CNrG Tailgate Mounted CNG For 20YD Bodies Only- Includes Installation Fee	
☐	60 DGE CNG System	$ 45,541
☐	75 DGE CNG System	$ 47,329
☐	90 DGE CNG System	$ 53,436
☐	105 DGE CNG System	$ 60,652
	CNrG Options	
☐	Front Bumper Fill with Kill Cap	$ 1,329
☐	Remote Fill, StreetSide Rear Fill Port	$ 2,318
☐	Remote Fill, Curbside Rear Fill Port	$ 2,318
☐	Defuel Transfer Hose - 35 ft.	$ 2,034
	CNG Installation - Top of Body Installation	
☐	CNG Installation Charge - Includes brackets, temporary tank rental, hardware, and mounting of CNG system	$ 5,969
	Extended Complete Body Warranty Options	
☐	Two (2) Year (Months 13-24) (Maximum 4,000 hrs. of Operation) Complete Heil Body Warranty Requires additional purchase of Infinity packer/eject cylinders from above	$ 4,671
☐	Three (3) Year (Months 13-36) (Maximum 6,000 hrs. of Operation) Complete Heil Body Warranty Requires additional purchase of Infinity packer/eject cylinders from above	$ 8,013
☐	Four (4) Year (Months 13-48) (Maximum 8,000 hrs. of Operation) Complete Heil Body Warranty Requires additional purchase of Infinity packer/eject cylinders from above	$ 11,284
☐	Five (5) Year (Months 13-60) (Maximum 10,000 hrs. of Operation) Complete Heil Body Warranty- Requires additional purchase of Infinity packer/eject cylinders from above	$ 15,126
	Extended Cylinder Warranty Options	
☐	Two (2) Year (Months 13-24) (Maximum 4,000 hrs. of Operation) All other Non-Infinity Cylinder Warranty - Requires additional purchase of Infinity packer/eject cylinders from above	$ 1,030
☐	Three (3) Year (Months 13-36) (Maximum 6,000 hrs. of Operation) All other Non-Infinity Cylinder Warranty - Requires additional purchase of Infinity packer/eject cylinders from above	$ 2,065
☐	Four (4) Year (Months 13-48) (Maximum 8,000 hrs. of Operation) All other Non-Infinity Cylinder Warranty - Requires additional purchase of Infinity packer/eject cylinders from above	$ 3,095
☐	Five (5) Year (Maximum 10,000 hrs. of Operation) All other Non-Infinity Cylinder Warranty - Requires purchase of Infinity packer or eject Cylinders from above	$ 3,605
	Extended Hydraulic Pump and Valve Warranty Options	
☐	Two (2) Year (Months 13-24) (Maximum 4,000 hours of operation) Hydraulic Pump and Valve warranty *Not needed if purchasing extended complete body warranty*	$ 1,246
☐	Three (3) Year (Months 13-36) (Maximum 6,000 hours of operation) Hydraulic Pump and Valve warranty *Not needed if purchasing extended complete body warranty*	$ 2,421
☐	Four (4) Year (Months 13-48) (Maximum 8,000 hours of operation) Hydraulic Pump and Valve warranty *Not needed if purchasing extended complete body warranty*	$ 3,600
☐	Five (5) Year (Months 13-60) (Maximum 10,000 hours of operation) Hydraulic Pump and Valve warranty *Not needed if purchasing extended complete body warranty*	$ 6,232
	Paint Options	
NOTE: LIST PAINT CODES ON PAINT DIAGRAM		
☐	Customized Paint Color - Paint Color Code NOT included in the Color Smart Brochure	$ 417
☐	Two Tone Paint	$ 1,576
☐	Paint Striping - first stripe	$ 1,329
☐	Paint Striping - each additional stripe	$ 742
☐	Metallic Paint	$ 7,210
☐	Clear coat Finish	$ 1,844
☐	Anti-Graffiti Clear coat Finish	$ 2,652
☐	Prime Paint Only - deduct	$ (1,220)
☐	Heil CleanShield™ by BrandArmor™,- Cab protector decal.	$ 1,432
	TOTALS	
	Total from Options Above (MSRP)	$ -
	Additional Options (Custom's, Chassis Mods, Etc.) Total	
	Subtotal	$ -
	Dealer Discount (%)	$ -
	Dealer Net Price	$ -
	Surcharge if Applicable	$ -
	Additional Discount (SPR)	
	Freight	
	Total Price per Unit	$ -

Return to Index Page

Half/Pack® Sierra

Featuring Odyssey ™ Controls

Paint Stripe and Accessory Requirements

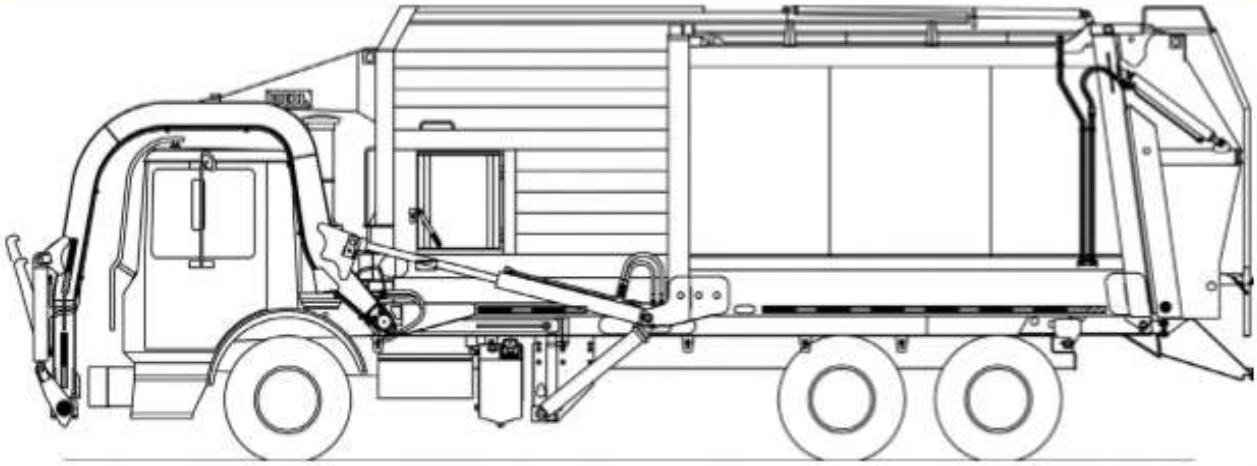

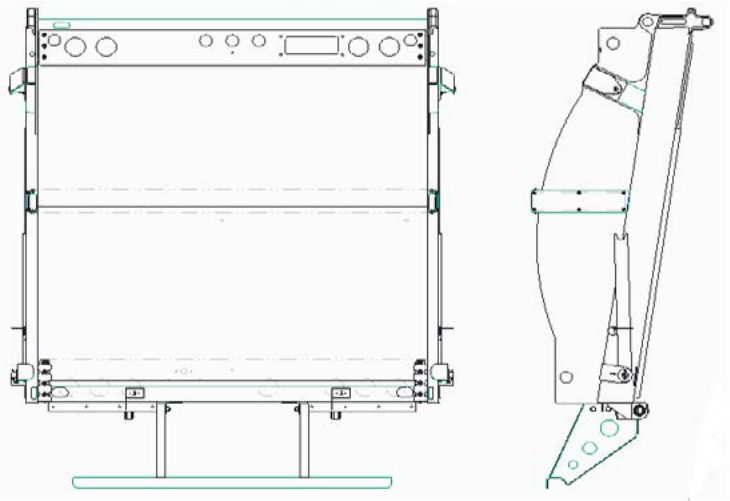

PAINT AND OPTIONS LAYOUT DETAIL
USE THIS FORM TO DESCRIBE PAINT SCHEMES
BE SPECIFIC ABOUT DIMENSIONS AND DETAILS

Sales Order #		Submitted by	
Customer			
Paint Color and Code 1			
Paint Color and Code 2			
Paint Color and Code 3			
Chassis Make			
Chassis Model			
Wheelbase			
Body Size		Approved by	

Half/Pack® Freedom

Featuring Odyssey ™ Controls

**Curotto-Can automated carry can and tag axle sold separately

Standard Equipment Features included in Base Price

- Hinged and completely sealed left-side body access door with step and grab handle
- Full aluminum cab shield with air cylinder assisted raise
- 3” underbody gate valve on street side for liquid removal
- Front head closure screen with splash guard
- Body service props
- Tailgate service props
- Fully automatic Shur-Lock™ tailgate locks
- Clamp-on arms
- 8,000 lb. capacity arms - WASTEC WRP 06-1996 rated
- Four arm shaft bearing supports
- Bolt-on rubber arm stops
- Heavy-duty forks - 1.5” thick x 63” grip length
- Chassis frame-mounted aluminum oil tank with level / temperature gauge and suction shut-off valve
- 3-micron return line filter with magnetic trap and in-cab filter bypass monitor
- Heil Optimum Payload System - HOPS™
- 100-micron suction line strainer
- Abrasion-resistant hydraulic hoses
- Cortex Controller ™ with InSight™ diagnostic display with integrated 3rd Eye camera feed
- Throttle advance / throttle limit kit
- Left and right-hand multifunction joysticks
- Complete array of in-cab function indicator lights on in cab display
- Arm rest for operator controls
- 5 lb. in-cab fire extinguisher
- Solid-state control panel
- Tailgate lock & closed indicator sensor with in cab indicator and alarm
- PTO Mounted Load Sense Piston Pump with Hot Shift PTO
- Cavity coat and joint sealer
- Arm guides mounted to front bumper
- Chrome-plated cylinder rods
- Hydraulic arm tube covers
- Remote I/O for tailgate valve and Curotto-Can
- Greaseless tailgate hinge and lift cylinders
- Hydraulic oil temperature sensor with alarm
- Body hydraulic pressure sensor
- Streetwise Hydraulics™
- Hopper flood light
- Low oil level sensor light, buzzer, and pump shut-off
- Severe-duty wear bar kit
- Remote packer lube kit
- Shovel kit mounted on back of the packer
- Arm / fork overweight warning kit
- Backup alarm, backup light and license plate light
- LED center-mounted brake light
- LED duplicate high and low mount stop, turn, and tail lights
- LED mid-body turn signals
- Strobe light, amber mounted on lower tailgate - in-cab switch, pump on, and reverse activated
- Front and rear mud flaps - anti-sail / anti-splash
- Rear under ride guard
- 20 lb. fire extinguisher
- FMVSS #108 clearance lights & reflectors
- ICC reflective tape
- Rear camera bracket and flood lights - reverse activated
- Body undercoating
- Customer’s choice of one color finish paint from Color Smart brochure
- Standard 1-year warranty (2,000 Hours of Operation)
- ANSI Z 245.1-2017 compliant
- Upper arm reinforcement
- High-pressure filter kit
- Remote lube for center arm bearing blocks
- Push Button controls with expanded system status notification
- Zinc Plated Hydraulic Tubes

Return to Index Page

2020 Half/Pack® Freedom Featuring Odyssey ™ Controls - Sales Order Form		
Base Units Half/Pack® Freedom Featuring Odyssey ™ Controls		
☐	20 cubic yard	$ 152,785
☐	23 cubic yard	$ 152,234
☐	28 cubic yard	$ 152,785
☐	Add Sumps to Body	$ 742
☐	Service Hoist Kit - 187" Wheelbase 5 Axle Units WILL NOT accept the service hoist option*	$ 4,656
	*5 Axle 187" Wheelbase - Hendrickson Auxiliary Axles Only with 275/R70/22.5 or smaller tires.	
Hopper Size		12 yd³
CHASSIS MUST COMFORM WITH HEIL'S MOST CURRENT CHASSIS SPECIFICATIONS AT WWW.HEIL.COM		
Mounting Options		
☐	Full Factory Mount for Service Hoist or Serviceable Eject - Includes Body Props and Rear Pivot	$ 5,840
☐	Mount at Dealer Destination	$ 783
Power Take Off / Pump Options		
☐	PTO Mounted Load Sense Piston pump - Includes PTO	STD
Residential Front Loader Options		
☐	Hopper Seal Brush Kit - Includes Sides, Front, and Rear Bristle Hopper Seal Kit - For Curotto Only	$ 2,724
☐	Remote Curbside Curotto Controls	$ 1,643
☐	Installation of Auto cover controls - Auto cover must be purchased with the Curotto Can	$ 1,643
☐	In-Cab controls for integrated forward work lamps - Forward Work lamps must be purchased with the Curotto Can	$ 664
☐	Hose Conversion Kit - Must be selected if utilizing a Curotto Can Built prior to 1/1/2018	STD if Needed
Semi-Automated Option		
☐	Curotto Can Control Kit - Must Select to Add Controls to Order	$ -
☐	Bayne Carry Can Control Kit - Must Select to Add Controls to Order	$ -
A complete selection of premium Bayne carry cans to suit any application is provided in this price book for your convenience		
Control Options		
☐	Dual Multifunction Joystick - Left and Right Hand	STD
☐	Left Hand 2-Lever Electric Control in lieu of Multifunction Joystick	$ 572
☐	Left Hand Dual Axis Joystick Electric Control in lieu of Multifunction Joystick	$ 572
☐	StreetSide mounted Outside 4 Button Electric Push Button Controls for Arms, Forks, and Packer circuits. (Throttle Advance Not Included)	$ 2,477
☐	StreetSide mounted Outside Dual Lever controls and 4 Button Electric Push Button Controls for Pump Enable, Arms, Forks, and Packer circuits. Includes Throttle advance.	$ 2,884
☐	Upgrade to **12"** In Cab Display in lieu of **7"** Std (Non- 3rd Eye Camera Units Only) - See 3rd Eye below for 12" Display with camera options)	$ 1,000
Lighting and Electrical Accessories		
☐	Single LED Windscreen Mounted Container Light	$ 628
☐	Multi-Function LED Strobe / Turn Lamps	$ 649
☐	Body Side Backing Assist Lights - LED	$ 536
☐	Dual Oval Flat LED Strobes Mounted Mid-T/G - in-cab switch, pump on, and reverse activated	$ 1,123
☐	Preco™ Back up Alarm	$ 773
☐	Dual LED Cab Mounted Oval Strobe Lights	$ 770
☐	Whelen Strobe Lights Kit	$ 3,750
☐	Cab Shield Mounted LED Light Facing reward toward hopper opening	$ 628
AWTI ™ Radar Systems		
☐	AWTI™ Radar System used in conjunction with 3rd Eye Cameras -Must Select Camera Kit From 3rd Eye Camera Options	$ 2,359
3rd Eye® Camera Systems & 3rd® Eye Digital		
Note: Camera systems will accommodate a maximum of 6 cameras, not including driver and forward facing cameras included in 3rd Eye® Digital system		
☐	Base 3rd Eye® Single Camera System with **7"** Monitor and Single Camera Mounted on Tailgate	$ 2,148
☐	Upgraded base 3rd Eye® Single Camera System with **12"** Monitor and Single Camera Mounted on Tailgate	$ 3,148
☐	Add on 3rd Eye® Camera (LH Cab) - Camera System Price Adder (Only available if base camera is selected)	$ 572
☐	Add on 3rd Eye® Camera (RH Cab) - Camera System Price Adder (Only available if base camera is selected)	$ 572
☐	Add on 3rd Eye® Camera (LH Alley) - Camera System Price Adder (Only available if base camera is selected)	$ 572
☐	Add on 3rd Eye® Camera (RH Alley) - Camera System Price Adder (Only available if base camera is selected)	$ 572
☐	Add on 3rd Eye® Camera (Hopper) - Camera System Price Adder (Only available if base camera is selected)	$ 572
☐	3rd Eye® Digital System: Includes (Driver and Forward Facing Camera (Window Unit), and Gateway - (In-Cab Monitor Not Included) *Digital monitoring service not included and must be purchased and activated though 3rd Eye post delivery *	$ 3,317
Load Cell Scale Systems		
☐	Heil Optimum Payload System (HOPS) using Air-Weigh Axle Scales	$ 9,275
☐	Air-Weigh™ Axle Scale System without Interlock	$ 8,652
Auxiliary Axles Options		
*** NOTE: All axles MUST BE installed with tires so chassis can be re-certified to new GAWR and GVWR ratings**		
Watson & Chalin™ Options		
☐	Watson & Chalin™ Self Steering Pusher Axle: 13,500 pound capacity, hub piloted or 20" spoke wheel hubs, automatic slack adjusters, type 16 air chambers, steering stabilizer kit and reverse lift kit -	$ 11,958
☐	Watson & Chalin™ Self Steering Tag Axle: 13,500 pound capacity, hub piloted or 20" spoke wheel hubs, automatic slack adjusters, type 16 air chambers, steering stabilizer kit and reverse lift kit, includes Tag Axle Spill Shield	$ 12,288
☐	Watson & Chalin™ Rigid Pusher Axle: 25,000 pound capacity, hub piloted or 20" spoke wheel hubs, 30/30 brake chambers, automatic slack adjusters, 1,300 cubic inch air tank and regulator kit	$ 15,017
☐	Watson & Chalin™ Rigid Tag Axle: 25,000 pound capacity, hub piloted or 20" spoke wheel hubs, 30/30 brake chambers, automatic slack adjusters, 1,300 cubic inch air tank and regulator kit, includes Tag Axle Spill Shield	$ 15,337
Hendrickson™ Options		
☐	Hendrickson™ Pusher Axle-13.500 pound capacity, Non-Steerable	$ 12,041
☐	Hendrickson™ Pusher Axle-13.500 pound capacity, Steerable	$ 12,360
☐	Hendrickson™ Tag Axle-13.500 pound capacity, Steerable, includes Tag Axle Spill Shield	$ 12,360
☐	Hendrickson™ Tag Axle-13.500 pound capacity, Non- Steerable, includes Tag Axle Spill Shield	$ 12,041
☐	Hendrickson™ Steerable Pusher Axle: 20,000 pound capacity	$ 15,229
☐	Hendrickson™ Steerable Tag Axle: 20,000 pound capacity, includes Tag Axle Spill Shield	$ 15,548
* Note: All auxiliary applications must be approved by Heil prior to order acceptance		
Auxiliary Axle Tire Options		
☐	255/70R-22.5 - Qty(2) load range H, 5,510 pound single max load at 120 psi with Steel Wheels	$ 2,379
☐	275/70R-22.5 - Qty(2) load range H, 7,000 pound single max load at 120 psi with Steel Wheels	$ 3,008
☐	Upgrade to Polished Aluminum Wheels (Set of Two)	$ 1,545

2020 Half/Pack® Freedom Featuring Odyssey ™ Controls - Sales Order Form		
Body Options		
☐ Sliding Top Door - Aluminum - May not be compatible with roof mounted CNG system		$ 5,155
☐ Sliding Top Door - Steel - May not be compatible with roof mounted CNG system		$ 4,656
☐ Tailgate Mounted Aluminum Roof Access Ladder (Only one selection allowed) Not Available with CNrG Tailgate option		$ 1,859
☐ Tailgate Mounted Roof Access Ladder Steel (Only one selection allowed) *Not available with CNrG Tailgate Option*		$ 1,427
☐ CNrG Tailgate Mounted Aluminum Roof Access Ladder (only one selection allowed) * Not Available with STD Tailgate*		$ 1,859
☐ Curbside Mounted Roof Access Ladder (Only one selection allowed) *Not Available on 23yd body with Top Door*		$ 1,427
☐ Hopper Floor Liner (3/16" - AR400)		$ 1,906
☐ Hopper Floor Liner (1/4" - AR400)		$ 3,033
☐ Body Floor Liner (3/16" - AR400)		$ 2,163
☐ Body Side Wall Liners (3/16 - AR400)		$ 1,854
☐ Packer Mounted Retainer Teeth		$ 773
☐ Body Roof Retainer Teeth - 2 Rows at the front of the body - Minimizes Spring Back In Cardboard and Recycling Applications		$ 1,107
☐ Packer Follower - Reduces Garbage/Recycle Behind the Packer **(Includes Inverted Style cab protector) Other cab protectors not compatible with this option.**		$ 1,674
☐ High Pressure Filter Monitor		$ 711
☐ Second 20 lb. Fire Extinguisher (Will be mounted to Curb side Hopper, if unable will be mounted under body)		$ 525
☐ Tool Box Bumper Mount - Steel 18"x18"x24"		$ 814
☐ Tool Box Bumper Mount - Aluminum 18"x18"x24"		$ 963
☐ Tool Box Bumper Mount - Poly - 18"x18"x24"		$ 731
☐ Extendable Broom Kit - Mounted Curbside of Body (Not Available on 20/23 Yd)		$ 438
☐ Extendable Broom Kit - Mounted Under Body		$ 438
☐ Street Side of Body Mounted Shovel Bracket Kit		$ 250
☐ Cab Protector Extension Raise - Manual Jack - Will Change Cab Protector to Steel		$ 1,210
☐ Hydraulic Raise Cab Protector Kit - Cab Shield Fully Rotates into the Hopper		$ 5,660
☐ Steel Cab Protector		$ 2,009
☐ Aluminum Cab Protector Extension For Autocar Chassis		$ 664
☐ Rear Caution Decal		$ 304
☐ Wheel Chock Kit - Dual (Mounted Under Body)		$ 170
☐ Wheel Chock Kit - Dual (Mounted on Curbside Body)		$ 170
☐ Cable Fall Protection Kit		$ 3,610
☐ D-Ring Fall Protection		$ 876
☐ Hydraulic Oil Tank Quick Disconnect Kit - For use with filter buggy		$ 865
☐ Service Loop Plumbing - Butterfly Style Quick Disconnects		$ 625
☐ Spill Kit included mounting brackets - (Mounted on Front Head)		$ 361
☐ Spill Kit (In Toolbox) *Requires additional purchase of a tool box*		$ 335
☐ Hydraulic Oil Tank Heater - 500 watts		$ 1,262
☐ Bolt On Fender Extension Kit - Keeps Body Clean of Road Spray		$ 773
☐ California Back Up Alarm		$ 716
☐ Infinity Series Packer/Eject Cylinders with scrapers and hardened rods to 50 HRC - Includes Five (5) Year Packer/Eject Cylinder Only Warranty that covers dents and dings (This Option is Required if purchasing extended warranty's below)		$ 3,245
☐ Lightning Cylinder Package: reduces front loader arm cycle time by up to 5 seconds and reduces front loader arm lifting capacity to a maximum of 5,500 lbs. This package is available via Custom request only, and also requires an End User signed waiver acknowledging the reduced arm lifting capacity of these cylinders.		(Custom Required)
CNrG Tailgate Mounted CNG - Includes Installation Fee		
☐ 60 DGE CNG System		$ 42,889
☐ 75 DGE CNG System		$ 44,676
☐ 90 DGE CNG System		$ 50,784
☐ 105 DGE CNG System		$ 57,999
FET Exempt CNrG Tailgate Mounted CNG For 20YD Bodies Only- Includes Installation Fee		
☐ 60 DGE CNG System		$ 45,541
☐ 75 DGE CNG System		$ 47,329
☐ 90 DGE CNG System		$ 53,436
☐ 105 DGE CNG System		$ 60,652
CNrG Options		
☐ Front Bumper Fill with Kill Cap		$ 1,329
☐ Remote Fill, StreetSide Rear Fill Port		$ 2,318
☐ Remote Fill, Curbside Rear Fill Port		$ 2,318
☐ Defuel Transfer Hose - 35 ft.		$ 2,034
CNG Installation - Top of Body Installation		
☐ CNG Installation Charge - Includes brackets, temporary tank rental, hardware, and mounting of CNG system		$ 5,969
Extended Complete Body Warranty Options		
☐ Two (2) Year (Months 13-24) (Maximum 4,000 hrs. of Operation) Complete Heil Body Warranty Requires additional purchase of Infinity packer/eject cylinders from above		$ 4,671
☐ Three (3) Year (Months 13-36) (Maximum 6,000 hrs. of Operation) Complete Heil Body Warranty Requires additional purchase of Infinity packer/eject cylinders from above		$ 8,013
☐ Four (4) Year (Months 13-48) (Maximum 8,000 hrs. of Operation) Complete Heil Body Warranty Requires additional purchase of Infinity packer/eject cylinders from above		$ 11,284
☐ Five (5) Year (Months 13-60) (Maximum 10,000 hrs. of Operation) Complete Heil Body Warranty Requires additional purchase of Infinity packer/eject cylinders from above		$ 15,126
Extended Cylinder Warranty Options		
☐ Two (2) Year (Months 13-24) (Maximum 4,000 hrs. of Operation) All other Non-Infinity Cylinder Warranty - Requires additional purchase of Infinity packer/eject cylinders from above		$ 1,030
☐ Three (3) Year (Months 13-36) (Maximum 6,000 hrs. of Operation) All other Non-Infinity Cylinder Warranty - Requires additional purchase of Infinity packer/eject cylinders from above		$ 2,065
☐ Four (4) Year (Months 13-48) (Maximum 8,000 hrs. of Operation) All other Non-Infinity Cylinder Warranty - Requires additional purchase of Infinity packer/eject cylinders from above		$ 3,095
☐ Five (5) Year (Maximum 10,000 hrs. of Operation) All other Non-Infinity Cylinder Warranty - Requires purchase of Infinity packer or eject Cylinders from above		$ 3,605
Extended Hydraulic Pump and Valve Warranty Options		
☐ Two (2) Year (Months 13-24) (Maximum 4,000 hours of operation) Hydraulic Pump and Valve warranty *Not needed if purchasing extended complete body warranty*		$ 1,246
☐ Three (3) Year (Months 13-36) (Maximum 6,000 hours of operation) Hydraulic Pump and Valve warranty *Not needed if purchasing extended complete body warranty*		$ 2,421
☐ Four (4) Year (Months 13-48) (Maximum 8,000 hours of operation) Hydraulic Pump and Valve warranty *Not needed if purchasing extended complete body warranty*		$ 3,600
☐ Five (5) Year (Months 13-60) (Maximum 10,000 hours of operation) Hydraulic Pump and Valve warranty *Not needed if purchasing extended complete body warranty*		$ 6,232
Paint Options		
NOTE: LIST PAINT CODES ON PAINT DIAGRAM		
☐ Customized Paint Color - Paint Color Code NOT included in the Color Smart Brochure		$ 417
☐ Two Tone Paint		$ 1,576
☐ Paint Striping - first stripe		$ 1,329
☐ Paint Striping - each additional stripe		$ 742
☐ Metallic Paint		$ 7,210
☐ Clear coat Finish		$ 1,844
☐ Anti-Graffiti Clear coat Finish		$ 2,652
☐ Prime Paint Only - deduct		$ (1,220)
☐ Heil CleanShield™ by BrandArmor™ Cab protector decal.		$ 1,432
TOTALS		
Total from Options Above (MSRP)		$ -
Additional Options (Custom's, Chassis Mods, Etc.) Total		
Subtotal		$ -
Dealer Discount (%)	0%	$ -
Dealer Net Price		$ -
Surcharge if Applicable		$ -
Additional Discount (SPR)		
Freight		
Total Price per Unit		$ -

Half/Pack® Freedom

Featuring Odyssey ™ Controls

Paint Stripe and Accessory Requirements

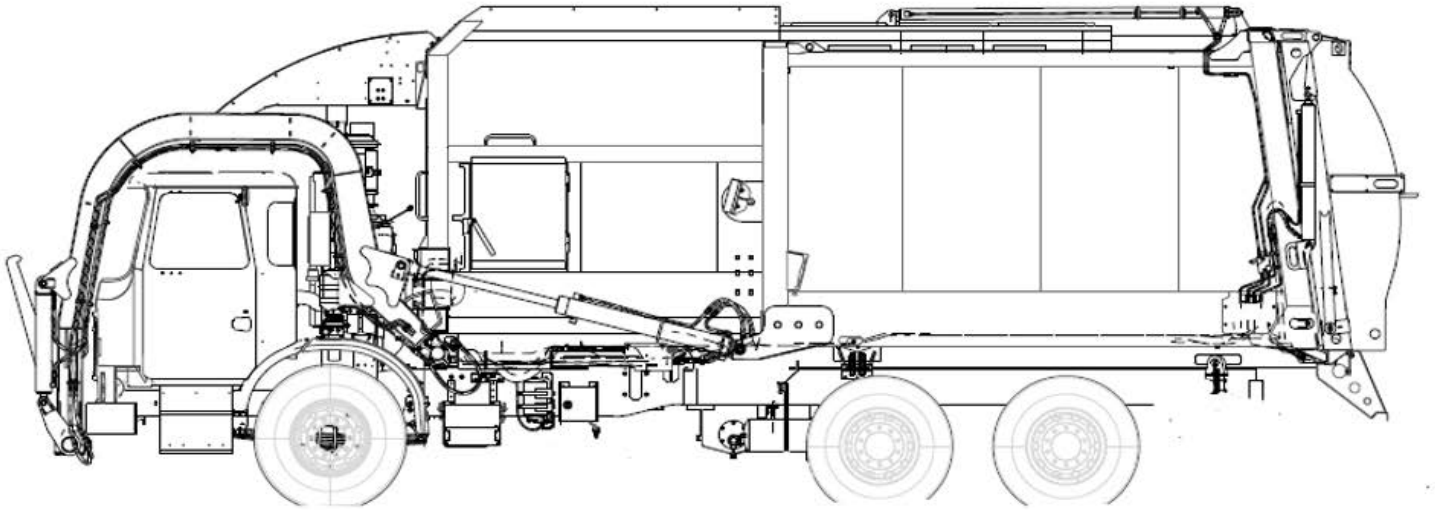

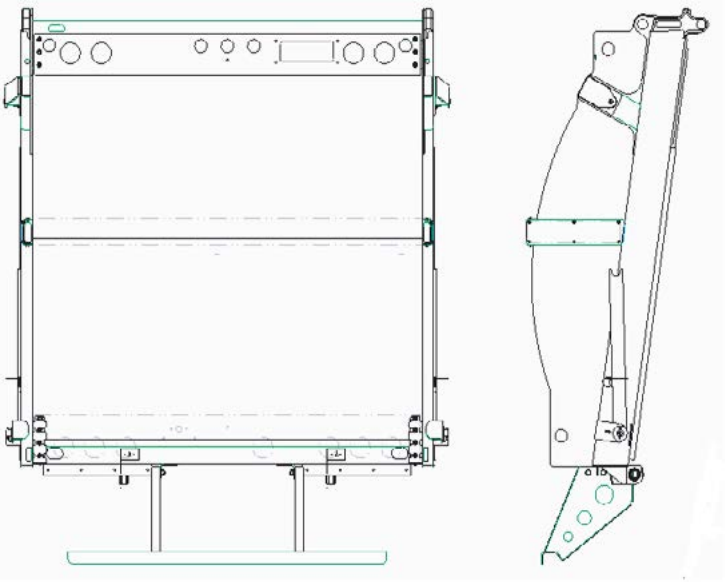

Paint and options layout detail
Use this form to describe paint schemes
Be specific about dimensions and details

Sales Order #		Submitted by	
Customer			
Paint Color 1			
Paint Color 2			
Paint Color 3			
Chassis Make			
Chassis Model			
Wheelbase			
Body Size		Approved by	

Half/Pack® Commercial

Featuring Odyssey ™ Controls

Curotto-Can Commercial Gripper Sold Separately

Standard Equipment Features included in Base Price

- Steel Sliding Top Door
- Hinged and completely sealed left-side body access door with step and grab handle
- Cab shield with hinged rubber tip extension - steel
- Front head closure screen with splash guard
- 3” underbody gate valve on street side for liquid removal
- Body service props
- Tailgate service props
- Fully automatic Shur-Lock™ tailgate latches
- Clamp-on arms
- 8,000 lb. capacity arms - WASTEC WRP 06-1996 rated
- Four arm shaft bearing supports
- Fork cross shaft rubber bumpers
- Bolt-on rubber arm stops
- Heavy-duty forks - 1 1/2” thick x 59” grip length
- PTO mounted load sense piston pump
- Crossed packing cylinders
- Chassis frame-mounted oil tank with level / temperature gauge and suction shut-off valve
- 3-micron return line filter with magnetic trap and in-cab filter bypass monitor
- 100-micron suction line strainer
- Abrasion-resistant hydraulic hoses
- Cortex Controller ™ with InSight™ diagnostic display with integrated 3rd Eye camera feed
- Throttle advance / throttle limit kit
- Left-hand single joystick operation
- Complete array of in-cab function indicator lights on in cab display
- Streetwise Hydraulics™
- Solid-state control panel
- Cavity & Joint sealer
- Arm Hydraulic Tube Covers
- Chrome-plated cylinder rods
- High-pressure filter kit
- 5 lb. in-cab fire extinguisher
- Backup alarm
- Backup and license plate light
- LED center-mounted brake light
- LED duplicate high and low mount stop, turn and tail lights
- LED mid-body turn signals
- Strobe light, amber mounted on lower tailgate - in-cab switch, pump on, and reverse activated
- Front and rear mud flaps - anti-sail / anti-splash
- Rear under ride guard
- Hopper floodlight
- Tailgate lock & closed indicator sensor with in-cab indicator and alarm
- Remote I/O for tailgate valve
- Greaseless tailgate hinge and lift cylinders
- Hydraulic oil temperature sensor with alarm
- Body hydraulic pressure sensor
- Low oil level sensor with light, buzzer, and pump shut-off
- Shovel kit mounted on back of the packer
- Severe-duty wear bar kit
- Arm/fork over height warning kit
- 20 lb. fire extinguisher
- FMVSS #108 clearance lights and reflectors
- ICC reflective tape
- Rear camera bracket and flood lights - reverse activated
- Body undercoating
- Customer’s choice of one color finish paint from Color Smart brochure
- Standard 1-year warranty (2,000 Hours of Operation)
- ANSI Z 245.1-2017 compliant
- Remote lube for center arm bearing blocks
- Push Button controls with expanded system status notification
- Zinc Plated Hydraulic Tubes

Return to Index Page

2020 Half/Pack® Commercial Featuring Odyssey ™ Controls - Sales Order Form		
Base Units Half/Pack® Commercial Featuring Odyssey ™ Controls		
☐ 20 cubic yard		$ 133,470
☐ 23 cubic yard		$ 132,778
☐ 28 cubic yard		$ 133,470
☐ 32 cubic yard		$ 137,104
☐ Add Sumps to Body		$ 742
☐ Service Hoist Kit - 187" Wheelbase 5 Axle Units WILL NOT accept the service hoist option*		$ 4,656
*5 Axle 187" Wheelbase - Hendrickson Auxiliary Axles Only with 275/R70/22.5 or smaller tires.		
Hopper Size		12 yd³
CHASSIS MUST COMFORM WITH HEIL'S MOST CURRENT CHASSIS SPECIFICATIONS AT WWW.HEIL.COM		
Mounting Options		
☐ Full Factory Mount for Service Hoist or Serviceable Eject - Includes Body Props and Rear Pivot		$ 5,840
☐ Mount at Dealer Destination		$ 783
Power Take Off / Pump Options		
☐ PTO Mounted Load Sense Piston pump - Includes PTO		STD
Commercial Gripper		
☐ Commercial Gripper attachment to the fork cross shaft to service 32-96 gallon residential container (Commercial Grabbers add 6.5" of overall height when arms are fully raised and forks fully tucked) *By selection this option you are confirming that understand the unit will be over 13' 6" when the arms are fully raised and the forks are fully tucked*		$ 7,468
Adjustable Fork's Options		
☐ Hydraulically Adjustable Side Pocket Forks in lieu of standard Fork Cross Shaft *Will not work in conjunction with Curotto Commercial Gripper*		$ 8,240
☐ Hydraulically Adjustable Bottom Pocket Forks in lieu of standard Fork Cross Shaft *Will not work in conjunction with Curotto Can or Curotto Commercial Gripper attachments*		$ 11,845
Control Options		
☐ Left Hand Dual Axis Joystick - Electric Controlled		STD
☐ Left Hand 2 Lever In-Cab Electrical Controls in lieu of Joystick		$ 572
☐ StreetSide mounted Outside 4 Button Electric Push Button Controls for Arms, Forks, and Packer circuits (Throttle Advance Not Included)		$ 2,477
☐ StreetSide mounted Outside Dual Lever controls and 4 Button Electric Push Button Controls for Pump Enable, Arms, Forks, and Packer circuits. Includes Throttle advance.		$ 2,884
☐ Upgrade to **12"** In Cab Display in lieu of **7"** Std (Non- 3rd Eye Camera Units Only) - See 3rd Eye below for 12" Display with camera options)		$ 1,000
☐ Heil® Autonomous Lift Option [H.A.L.O.]		$ 3,500
Lighting and Electrical Accessories		
☐ Single LED Windscreen Mounted Container Light		$ 628
☐ Multi-Function LED Strobe / Turn Lamps		$ 649
☐ Body Side Backing Assist Lights - LED		$ 536
☐ Dual Oval Flat LED Strobes Mounted Mid-T/G - in-cab switch, pump on, and reverse activated		$ 1,123
☐ Dual Cab Guard Mounted Flood Lights		$ 525
☐ Preco™ Back Up Alarm		$ 773
☐ Dual LED Cab Mounted Oval Strobe Lights		$ 770
☐ Whelen Strobe Lights Kit		$ 3,750
☐ Cab Shield Mounted LED Light Facing reward toward hopper opening		$ 628
AWTI ™ Radar Systems		
☐ AWTI™ Radar System used in conjunction with 3rd Eye Cameras - Must Select Camera Kit From 3rd Eye Camera Options		$ 2,359
Camera Systems		
All camera systems are mounted with protective camera brackets and twin tailgate flood lights.		
CAMERA MONITOR LOCATION WILL BE CAB ROOF MOUNTED		
Swivel monitor bracket will be provided for dual drive chassis		
3rd Eye® Camera Systems & 3rd® Eye Digital		
Note: Camera systems will accommodate a maximum of 6 cameras, not including driver and forward facing cameras included in 3rd Eye® Digital system		
☐ Base 3rd Eye® Single Camera System with **7"** Monitor and Single Camera Mounted on Tailgate		$ 2,148
☐ Upgraded base 3rd Eye® Single Camera System with **12"** Monitor and Single Camera Mounted on Tailgate		$ 3,148
☐ Add on 3rd Eye® Camera (LH Cab) - Camera System Price Adder (Only available if base camera is selected)		$ 572
☐ Add on3rd Eye® Camera (RH Cab) - Camera System Price Adder (Only available if base camera is selected)		$ 572
☐ Add on 3rd Eye® Camera (LH Alley) - Camera System Price Adder (Only available if base camera is selected)		$ 572
☐ Add on 3rd Eye® Camera (RH Alley) - Camera System Price Adder (Only available if base camera is selected)		$ 572
☐ Add on 3rd Eye® Camera (Hopper) - Camera System Price Adder (Only available if base camera is selected)		$ 572
☐ 3rd Eye® Digital System: Includes (Driver and Forward Facing Camera (Window Unit), and Gateway - (In-Cab Monitor Not Included) *Digital monitoring service not included and must be purchased and activated though 3rd Eye post delivery *		$ 3,317
Load Cell Scale Systems		
☐ Heil Optimum Payload System (HOPS) using Air-Weigh Axle Scales		$ 9,275
☐ Air-Weigh™ Axle Scale System without Interlock		$ 8,652
Auxiliary Axles Options		
*** NOTE: All axles MUST BE installed with tires so chassis can be re-certified to new GAWR and GVWR ratings**		
Watson & Chalin™ Options		
☐ Watson & Chalin™ Self Steering Pusher Axle: 13,500 pound capacity, hub piloted or 20" spoke wheel hubs, automatic slack adjusters, type 16 air chambers, steering stabilizer kit and reverse lift kit -		$ 11,958
☐ Watson & Chalin™ Self Steering Tag Axle: 13,500 pound capacity, hub piloted or 20" spoke wheel hubs, automatic slack adjusters, type 16 air chambers, steering stabilizer kit and reverse lift kit, includes Tag Axle Spill Shield		$ 12,288
☐ Watson & Chalin™ Rigid Pusher Axle: 25,000 pound capacity, hub piloted or 20" spoke wheel hubs, 30/30 brake chambers, automatic slack adjusters, 1,300 cubic inch air tank and regulator kit		$ 15,017
☐ Watson & Chalin™ Rigid Tag Axle: 25,000 pound capacity, hub piloted or 20" spoke wheel hubs, 30/30 brake chambers, automatic slack adjusters, 1,300 cubic inch air tank and regulator kit, includes Tag Axle Spill Shield		$ 15,337
Hendrickson™ Options		
☐ Hendrickson™ Pusher Axle-13.500 pound capacity, Non-Steerable		$ 12,041
☐ Hendrickson™ Pusher Axle-13.500 pound capacity, Steerable		$ 12,360
☐ Hendrickson™ Tag Axle-13.500 pound capacity, Steerable, includes Tag Axle Spill Shield		$ 12,360
☐ Hendrickson™ Tag Axle-13.500 pound capacity, Non- Steerable, includes Tag Axle Spill Shield		$ 12,041
☐ Hendrickson™ Steerable Pusher Axle: 20,000 pound capacity		$ 15,229
☐ Hendrickson™ Steerable Tag Axle: 20,000 pound capacity, includes Tag Axle Spill Shield		$ 15,548
* Note: All auxiliary applications must be approved by Heil prior to order acceptance		
Auxiliary Axle Tire Options		
☐ 255/70R-22.5 - Qty(2) load range H, 5,510 pound single max load at 120 psi with Steel Wheels		$ 2,379
☐ 275/70R-22.5 - Qty(2) load range H, 7,000 pound single max load at 120 psi with Steel Wheels		$ 3,008
☐ Upgrade to Polished Aluminum Wheels (Set of Two)		$ 1,545

Return to Index Page

2020 Half/Pack® Commercial Featuring Odyssey ™ Controls - Sales Order Form		
Body Options		
☐ Sliding Top Door - Aluminum - May not be compatible with roof mounted CNG system		$ 5,155
☐ Tailgate Mounted Aluminum Roof Access Ladder (Only one selection allowed) Not Available with CNrG Tailgate option		$ 1,859
☐ Tailgate Mounted Roof Access Ladder Steel (Only one selection allowed) *Not available with CNrG Tailgate Option*		$ 1,427
☐ CNrG Tailgate Mounted Aluminum Roof Access Ladder (only one selection allowed) * Not Available with STD Tailgate*		$ 1,859
☐ Curbside Mounted Roof Access Ladder (Only one selection allowed) *Not Available on 23yd body with Top Door*		$ 1,427
☐ Hopper Floor Liner (3/16" - AR400)		$ 1,906
☐ Hopper Floor Liner (1/4" - AR400)		$ 3,033
☐ Body Floor Liner (3/16" - AR400)		$ 2,163
☐ Body Side Wall Liners (3/16 - AR400)		$ 1,854
☐ Packer Mounted Retainer Teeth		$ 773
☐ Body Roof Retainer Teeth - 2 Rows at the front of the body - Minimizes Spring Back In Cardboard and Recycling Applications		$ 1,107
☐ Packer Follower - Reduces Garbage/Recycle Behind the Packer **(Includes Inverted Style cab protector) Other cab protectors not compatible with this option.**		$ 1,674
☐ High Pressure Filter Monitor		$ 711
☐ Second 20 lb. Fire Extinguisher (Will be mounted to Curb side Hopper, if unable will be mounted under body)		$ 525
☐ Tool Box Bumper Mount - Steel 18"x18"x24"		$ 814
☐ Tool Box Bumper Mount - Aluminum 18"x18"x24"		$ 963
☐ Tool Box Bumper Mount - Poly - 18"x18"x24"		$ 731
☐ Extendable Broom Kit - Mounted Curbside of Body (Not Available on 20/23 Yd)		$ 438
☐ Extendable Broom Kit - Mounted Under Body		$ 438
☐ Street Side of Body Mounted Shovel Bracket Kit		$ 250
☐ Cab Protector Extension Raise - Manual Jack - Will Receive Steel Cab Shield in Lieu of Aluminum		$ 1,210
☐ Hydraulic Raise Cab Protector Kit - Cab Shield Fully Rotates into the Hopper - Will Receive Steel Cab Shield in Lieu of Aluminum		$ 5,660
☐ Aluminum Cab Protector		$ 2,256
☐ Aluminum Cab Protector Extension For Autocar Chassis		$ 664
☐ Rear Caution Decal		$ 304
☐ Wheel Chock Kit - Dual (Mounted Under Body)		$ 170
☐ Wheel Chock Kit - Dual (Mounted on Curbside Body)		$ 170
☐ Cable Fall Protection Kit		$ 3,610
☐ D-Ring Fall Protection		$ 876
☐ Hydraulic Oil Tank Quick Disconnect Kit - For use with filter buggy		$ 865
☐ Service Loop Plumbing - Butterfly Style Quick Disconnects		$ 625
☐ Spill Kit included mounting brackets - (Mounted on Front Head)		$ 361
☐ Spill Kit (In Toolbox) *Requires additional purchase of a tool box*		$ 335
☐ Hydraulic Oil Tank Heater - 500 watts		$ 1,262
☐ Bolt On Fender Extension Kit - Keeps Body Clean of Road Spray		$ 773
☐ California Back Up Alarm		$ 716
☐ Infinity Series Packer/Eject Cylinders with scrapers and hardened rods to 50 HRC - Includes Five (5) Year Packer/Eject Cylinder Only Warranty that covers dents and dings (This Option is Required if purchasing extended warranty's below)		$ 3,245
☐ Lightning Cylinder Package: reduces front loader arm cycle time by up to 5 seconds and reduces front loader arm lifting capacity to a maximum of 5,500 lbs. This package is available via Custom request only, and also requires an End User signed waiver acknowledging the reduced arm lifting capacity of these cylinders.		Custom Required
CNrG Tailgate Mounted CNG - Includes Installation Fee		
☐ 60 DGE CNG System		$ 42,889
☐ 75 DGE CNG System		$ 44,676
☐ 90 DGE CNG System		$ 50,784
☐ 105 DGE CNG System		$ 57,999
FET Exempt CNrG Tailgate Mounted CNG For 20YD Bodies Only- Includes Installation Fee		
☐ 60 DGE CNG System		$ 45,541
☐ 75 DGE CNG System		$ 47,329
☐ 90 DGE CNG System		$ 53,436
☐ 105 DGE CNG System		$ 60,652
CNrG Options		
☐ Front Bumper Fill with Kill Cap		$ 1,329
☐ Remote Fill, StreetSide Rear Fill Port		$ 2,318
☐ Remote Fill, Curbside Rear Fill Port		$ 2,318
☐ Defuel Transfer Hose - 35 ft.		$ 2,034
CNG Installation - Top of Body Installation		
☐ CNG Installation Charge - Includes brackets, temporary tank rental, hardware, and mounting of CNG system		$ 5,969
Extended Complete Body Warranty Options		
☐ Two (2) Year (Months 13-24) (Maximum 4,000 hrs. of Operation) Complete Heil Body Warranty Requires additional purchase of Infinity packer/eject cylinders from above		$ 4,671
☐ Three (3) Year (Months 13-36) (Maximum 6,000 hrs. of Operation) Complete Heil Body Warranty Requires additional purchase of Infinity packer/eject cylinders from above		$ 8,013
☐ Four (4) Year (Months 13-48) (Maximum 8,000 hrs. of Operation) Complete Heil Body Warranty Requires additional purchase of Infinity packer/eject cylinders from above		$ 11,284
☐ Five (5) Year (Months 13-60) (Maximum 10,000 hrs. of Operation) Complete Heil Body Warranty Requires additional purchase of Infinity packer/eject cylinders from above		$ 15,126
Extended Cylinder Warranty Options		
☐ Two (2) Year (Months 13-24) (Maximum 4,000 hrs. of Operation) All other Non-Infinity Cylinder Warranty - Requires additional purchase of Infinity packer/eject cylinders from above		$ 1,030
☐ Three (3) Year (Months 13-36) (Maximum 6,000 hrs. of Operation) All other Non-Infinity Cylinder Warranty - Requires additional purchase of Infinity packer/eject cylinders from above		$ 2,065
☐ Four (4) Year (Months 13-48) (Maximum 8,000 hrs. of Operation) All other Non-Infinity Cylinder Warranty - Requires additional purchase of Infinity packer/eject cylinders from above		$ 3,095
☐ Five (5) Year (Maximum 10,000 hrs. of Operation) All other Non-Infinity Cylinder Warranty - Requires purchase of Infinity packer or eject Cylinders from above		$ 3,605
Extended Hydraulic Pump and Valve Warranty Options		
☐ Two (2) Year (Months 13-24) (Maximum 4,000 hours of operation) Hydraulic Pump and Valve warranty *Not needed if purchasing extended complete body warranty*		$ 1,246
☐ Three (3) Year (Months 13-36) (Maximum 6,000 hours of operation) Hydraulic Pump and Valve warranty *Not needed if purchasing extended complete body warranty*		$ 2,421
☐ Four (4) Year (Months 13-48) (Maximum 8,000 hours of operation) Hydraulic Pump and Valve warranty *Not needed if purchasing extended complete body warranty*		$ 3,600
☐ Five (5) Year (Months 13-60) (Maximum 10,000 hours of operation) Hydraulic Pump and Valve warranty *Not needed if purchasing extended complete body warranty*		$ 6,232
Paint Options		
NOTE: LIST PAINT CODES ON PAINT DIAGRAM		
☐ Customized Paint Color - Paint Color Code NOT included in the Color Smart Brochure		$ 417
☐ Two Tone Paint		$ 1,576
☐ Paint Striping - first stripe		$ 1,329
☐ Paint Striping - each additional stripe		$ 742
☐ Metallic Paint		$ 7,210
☐ Clear coat Finish		$ 1,844
☐ Anti-Graffiti Clear coat Finish		$ 2,652
☐ Prime Paint Only - deduct		$ (1,220)
☐ Heil CleanShield™ by BrandArmor™ Cab protector decal.		$ 1,432
TOTALS		
Total from Options Above (MSRP)		$ -
Additional Options (Custom's, Chassis Mods, Etc.) Total		
Subtotal		$ -
Dealer Discount (%)	0%	$ -
Dealer Net Price		$ -
Surcharge if Applicable		$ -
Additional Discount (SPR)		
Freight		
Total Price per Unit		$ -

Half/Pack® Commercial

Featuring Odyssey ™ Controls

Paint Stripe and Accessory Requirements

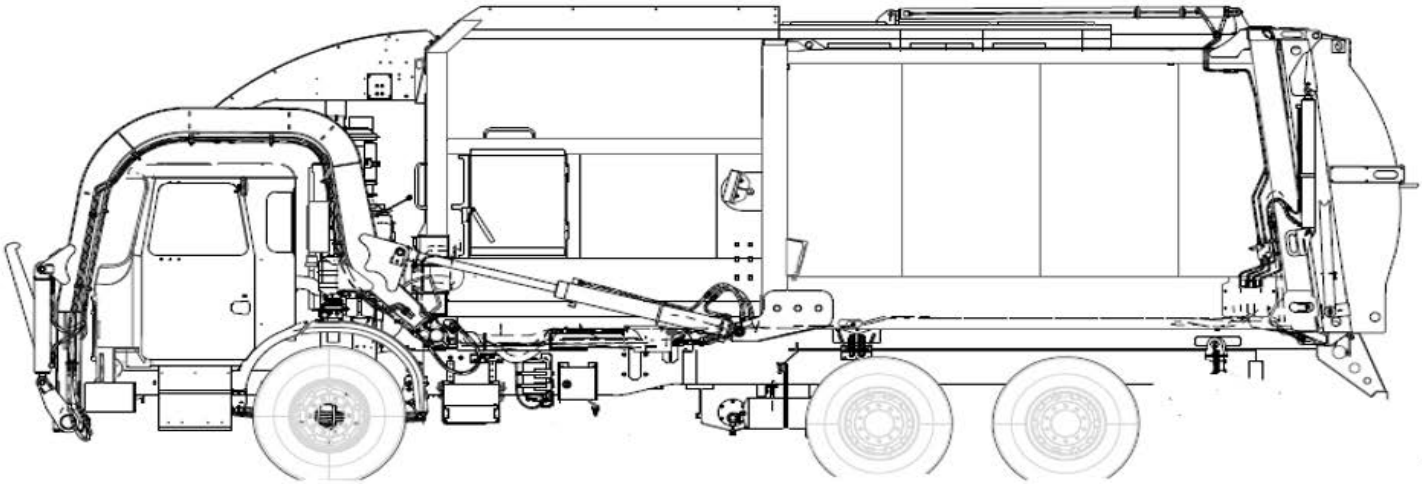

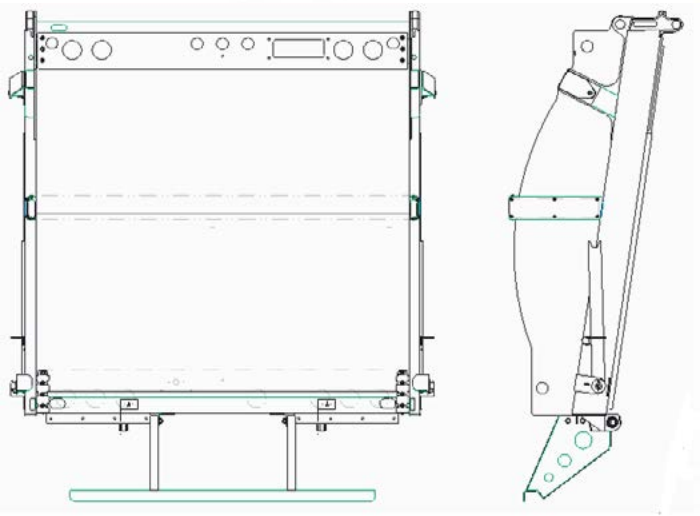

PAINT AND OPTIONS LAYOUT DETAIL
USE THIS FORM TO DESCRIBE PAINT SCHEMES
BE SPECIFIC ABOUT DIMENSIONS AND DETAILS

Sales Order #		Submitted by	
Customer			
Paint Color and Code 1			
Paint Color and Code 2			
Paint Color and Code 3			
Chassis Make			
Chassis Model			
Wheelbase			
Body Size		Approved by	

Half/Pack® Sierra Commercial

Featuring Odyssey ™ Controls

Standard Equipment Features included in Base Price

- Hinged and completely sealed left-side body access door with step and grab handle
- Full aluminum cab shield with air cylinder assisted raise
- 3” underbody gate valve on street side for liquid removal
- Body service props for service hoist models and service lift
- Tailgate service props
- Fully automatic Shur-Lock™ tailgate latches
- Clamp-on arms
- 8,000 lb. capacity arms - WASTEC WRP 06-1996 rated
- Four arm shaft bearing supports
- Fork cross shaft rubber bumpers
- Bolt-on rubber arm stops
- Heavy-duty forks - 1 1/2” thick x 59” grip length
- Crossed packing cylinders
- Remote I/O for tailgate valve
- Chassis frame-mounted oil tank with level / temperature gauge and suction shut-off valve
- 3-micron return line filter with magnetic trap and in-cab filter bypass monitor
- 100-micron suction line strainer
- Abrasion-resistant hydraulic hoses
- Cortex Controller ™ with InSight™ diagnostic display with integrated 3rd Eye camera feed
- Throttle advance / throttle limit kit
- Left-hand single joystick
- Complete array of in-cab function indicator lights on in cab display
- 5 lb. in-cab fire extinguisher
- Solid-state control panel
- Streetwise Hydraulics™
- Tailgate lock & closed indicator sensor with in-cab indicator and alarm
- Remote lube for center arm bearing blocks
- Push Button controls with expanded system status notification
- Zinc Plated Hydraulic Tubes
- Greaseless tailgate hinge and lift cylinders
- Hydraulic oil temperature sensor with alarm
- Body hydraulic pressure sensor
- Backup alarm
- Hopper floodlight
- Low oil sensor light, buzzer and pump shutoff
- Severe-duty wear bar kit
- Sliding Top Door
- Remote packer lube kit
- Shovel kit mounted on back of the packer
- Arm / fork over height warning kit
- Backup and license plate light
- LED center-mounted brake light
- LED duplicate high and low mount stop, turn, and tail lights
- LED mid-body turn signals
- Strobe light, amber mounted on lower tailgate - in-cab switch, pump on, and reverse activated
- Front and rear mud flaps - anti-sail / anti-splash
- Rear under ride guard
- 20 lb. fire extinguisher
- FMVSS #108 clearance lights and reflectors
- ICC reflective tape
- Rear camera bracket and flood lights - reverse activated
- Body undercoating
- Customer’s choice of one color finish paint from Color Smart brochure
- Standard 1-year warranty (2,000 Hours of Operation)
- ANSI Z 245.1-2017 compliant
- Safety triangle
- Cavity coat and joint sealer
- Chrome-plated cylinder rods
- Arm Hydraulic Tube Covers

Return to Index Page

2020 Half/Pack® Sierra Commercial Featuring Odyssey ™ Controls - Sales Order Form	
Base Units Half/Pack® Sierra Commercial Featuring Odyssey ™ Controls	
20 cubic yard	$ 143,994
23 cubic yard	$ 143,288
28 cubic yard	$ 143,994
Add Sumps to Body	$ 742
Service Hoist Kit - 187" Wheelbase 5 Axle Units WILL NOT accept the service hoist option*	$ 4,656
*5 Axle 187" Wheelbase - Hendrickson Auxiliary Axles Only with 275/R70/22.5 or smaller tires.	
Hopper Size	12 yd³
CHASSIS MUST COMFORM WITH HEIL'S MOST CURRENT CHASSIS SPECIFICATIONS AT WWW.HEIL.COM	
Mounting Options	
Full Factory Mount for Service Hoist or Serviceable Eject - Includes Body Props and Rear Pivot	$ 5,840
Mount at Dealer Destination	$ 783
Power Take Off / Pump Options	
PTO Mounted Load Sense Piston pump - Includes PTO	STD
Commercial Gripper	
Commercial Gripper attachment to the fork cross shaft to service 32-96 gallon residential containers (Commercial Grabbers add 6.5" of overall height when arms are fully raised and forks fully tucked) *By selection this option you are confirming that understand the unit will be over 13' 6" when the arms are fully raised and the forks are fully tucked*	$ 7,468
Adjustable Fork's Options	
Hydraulically Adjustable Side Pocket Forks in lieu of standard Fork Cross Shaft *Will not work in conjunction with Curotto Commercial Gripper*	$ 8,240
Hydraulically Adjustable Bottom Pocket Forks in lieu of standard Fork Cross Shaft *Will not work in conjunction with Curotto Can or Curotto Commercial Gripper attachments*	$ 11,845
Control Options	
Left Hand Dual Axis Joystick - Electric Controlled	STD
Left Hand 2 Lever In-Cab Electrical Controls in lieu of Joystick	$ 572
StreetSide mounted Outside 4 Button Electric Push Button Controls for Arms, Forks, and Packer circuits. (Throttle Advance Not Included)	$ 2,477
StreetSide mounted Outside Dual Lever controls and 4 Button Electric Push Button Controls for Pump Enable, Arms, Forks, and Packer circuits. Includes Throttle advance.	$ 2,884
Upgrade to **12"** In Cab Display in lieu of **7"** Std (Non- 3rd Eye Camera Units Only) - See 3rd Eye below for 12" Display with camera options)	$ 1,000
Heil® Autonomous Lift Option [H.A.L.O.]	$ 3,500
Lighting and Electrical Accessories	
Single LED Windscreen Mounted Container Light	$ 628
Multi-Function LED Strobe / Turn Lamps	$ 649
Body Side Backing Assist Lights - LED	$ 536
Dual Oval Flat LED Strobes Mounted Mid-T/G - in-cab switch, pump on, and reverse activated	$ 1,123
Dual Cab Guard Mounted Flood Lights	$ 525
Preco™ Back up Alarm	$ 773
Dual LED Cab Mounted Oval Strobe Lights	$ 770
Whelen Strobe Lights Kit	$ 3,750
Cab Shield Mounted LED Light - Facing reward toward hopper opening	$ 628
AWTI ™ Radar Systems	
AWTI™ Radar System used in conjunction with 3rd Eye Cameras - Must Select Camera Kit From 3rd Eye Camera Options	$ 2,359
3rd Eye® Camera Systems & 3rd® Eye Digital	
Note: Camera systems will accommodate a maximum of 6 cameras, not including driver and forward facing cameras included in 3rd Eye® Digital system	
Base 3rd Eye® Single Camera System with **7"** Monitor and Single Camera Mounted on Tailgate	$ 2,148
Upgraded base 3rd Eye® Single Camera System with **12"** Monitor and Single Camera Mounted on Tailgate	$ 3,148
Add on 3rd Eye® Camera (LH Cab) - Camera System Price Adder (Only available if base camera is selected)	$ 572
Add on 3rd Eye® Camera (RH Cab) - Camera System Price Adder (Only available if base camera is selected)	$ 572
Add on 3rd Eye® Camera (LH Alley) - Camera System Price Adder (Only available if base camera is selected)	$ 572
Add on 3rd Eye® Camera (RH Alley) - Camera System Price Adder (Only available if base camera is selected)	$ 572
Add on 3rd Eye® Camera (Hopper) - Camera System Price Adder (Only available if base camera is selected)	$ 572
3rd Eye® Digital System: Includes (Driver and Forward Facing Camera (Window Unit), and Gateway - (In-Cab Monitor Not Included) - *Digital monitoring service not included and must be purchased and activated though 3rd Eye post delivery *	$ 3,317
Load Cell Scale Systems	
Heil Optimum Payload System (HOPS) using Air-Weigh Axle Scales	$ 9,275
Air-Weigh™ Axle Scale System without Interlock	$ 8,652
Auxiliary Axles Options	
* NOTE: All axles MUST BE installed with tires so chassis can be re-certified to new GAWR and GVWR ratings	
Watson & Chalin™ Options	
Watson & Chalin™ Self Steering Pusher Axle: 13,500 pound capacity, hub piloted or 20" spoke wheel hubs, automatic slack adjusters, type 16 air chambers, steering stabilizer kit and reverse lift kit -	$ 11,958
Watson & Chalin™ Self Steering Tag Axle: 13,500 pound capacity, hub piloted or 20" spoke wheel hubs, automatic slack adjusters, type 16 air chambers, steering stabilizer kit and reverse lift kit, includes Tag Axle Spill Shield	$ 12,288
Watson & Chalin™ Rigid Pusher Axle: 25,000 pound capacity, hub piloted or 20" spoke wheel hubs, 30/30 brake chambers, automatic slack adjusters, 1,300 cubic inch air tank and regulator kit	$ 15,017
Watson & Chalin™ Rigid Tag Axle: 25,000 pound capacity, hub piloted or 20" spoke wheel hubs, 30/30 brake chambers, automatic slack adjusters, 1,300 cubic inch air tank and regulator kit, includes Tag Axle Spill Shield	$ 15,337
Hendrickson™ Options	
Hendrickson™ Pusher Axle-13.500 pound capacity, Non-Steerable	$ 12,041
Hendrickson™ Pusher Axle-13.500 pound capacity, Steerable	$ 12,360
Hendrickson™ Tag Axle-13.500 pound capacity, Steerable, includes Tag Axle Spill Shield	$ 12,360
Hendrickson™ Tag Axle-13.500 pound capacity, Non- Steerable, includes Tag Axle Spill Shield	$ 12,041
Hendrickson™ Steerable Pusher Axle: 20,000 pound capacity	$ 15,229
Hendrickson™ Steerable Tag Axle: 20,000 pound capacity, includes Tag Axle Spill Shield	$ 15,548
* Note: All auxiliary applications must be approved by Heil prior to order acceptance	
Auxiliary Axle Tire Options	
255/70R-22.5 - Qty(2) load range H, 5,510 pound single max load at 120 psi with Steel Wheels	$ 2,379
275/70R-22.5 - Qty(2) load range H, 7,000 pound single max load at 120 psi with Steel Wheels	$ 3,008
Upgrade to Polished Aluminum Wheels (Set of Two)	$ 1,545
Body Options	
Sliding Top Door - Aluminum - May not be compatible with roof mounted CNG system	$ 5,155
Tailgate Mounted Aluminum Roof Access Ladder (Only one selection allowed) Not Available with CNrG Tailgate option	$ 1,859
Tailgate Mounted Roof Access Ladder Steel (Only one selection allowed) *Not available with CNrG Tailgate Option*	$ 1,427
CNrG Tailgate Mounted Aluminum Roof Access Ladder (only one selection allowed) * Not Available with STD Tailgate*	$ 1,859
Curbside Mounted Roof Access Ladder (Only one selection allowed) *Not Available on 23yd body with Top Door*	$ 1,427
Hopper Floor Liner (3/16" - AR400)	$ 1,906
Hopper Floor Liner (1/4" - AR400)	$ 3,033
Body Floor Liner (3/16" - AR400)	$ 2,163
Body Side Wall Liners (3/16 - AR400)	$ 1,854
Packer Mounted Retainer Teeth	$ 773
Body Roof Retainer Teeth - 2 Rows at the front of the body - Minimizes Spring Back In Cardboard and Recycling Applications	$ 1,107
Packer Follower - Reduces Garbage/Recycle Behind the Packer **(Includes Inverted Style cab protector) Other cab protectors not compatible with this option.**	$ 1,674
High Pressure Filter Monitor	$ 711
Second 20 lb. Fire Extinguisher (Will be mounted to Curb side Hopper, if unable will be mounted under body)	$ 525
Tool Box Bumper Mount - Steel 18"x18"x24"	$ 814
Tool Box Bumper Mount - Aluminum 18"x18"x24"	$ 963
Tool Box Bumper Mount - Poly - 18"x18"x24"	$ 731
Extendable Broom Kit - Mounted Curbside of Body (Not Available on 20/23 Yd)	$ 438
Extendable Broom Kit - Mounted Under Body	$ 438
Street Side of Body Mounted Shovel Bracket Kit	$ 250

2020 Half/Pack® Sierra Commercial Featuring Odyssey ™ Controls - Sales Order Form			
☐	Cab Protector Extension Raise - Manual Jack - Will Receive Steel Cab Shield in Lieu of Aluminum		$ 1,210
☐	Hydraulic Raise Cab Protector Kit - Cab Shield Fully Rotates into the Hopper - Will Receive Steel Cab Shield in Lieu of Aluminum		$ 5,660
☐	Steel Cab Protector		$ 2,009
☐	Aluminum Cab Protector Extension For Autocar Chassis		$ 664
☐	Rear Caution Decal		$ 304
☐	Wheel Chock Kit - Dual (Mounted Under Body)		$ 170
☐	Wheel Chock Kit - Dual (Mounted on Curbside Body)		$ 170
☐	Cable Fall Protection Kit		$ 3,610
☐	D-Ring Fall Protection		$ 876
☐	Hydraulic Oil Tank Quick Disconnect Kit - For use with filter buggy		$ 865
☐	Service Loop Plumbing - Butterfly Style Quick Disconnects		$ 625
☐	Spill Kit included mounting brackets - (Mounted on Front Head)		$ 361
☐	Spill Kit (In Toolbox) *Requires additional purchase of a tool box*		$ 335
☐	Hydraulic Oil Tank Heater - 500 watts		$ 1,262
☐	Bolt On Fender Extension Kit - Keeps Body Clean of Road Spray		$ 773
☐	California Back Up Alarm		$ 716
☐	Infinity Series Packer/Eject Cylinders with scrapers and hardened rods to 50 HRC - Includes Five (5) Year Packer/Eject Cylinder Only Warranty that covers dents and dings (This Option is Required if purchasing extended warranty's below)		$ 3,245
☐	Lightning Cylinder Package: reduces front loader arm cycle time by up to 5 seconds and reduces front loader arm lifting capacity to a maximum of 5,500 lbs. This package is available via Custom request only, and also requires an End User signed waiver acknowledging the reduced arm lifting capacity of these cylinders.		(Custom Required)
	CNrG Tailgate Mounted CNG - Includes Installation Fee		
☐	60 DGE CNG System		$ 42,889
☐	75 DGE CNG System		$ 44,676
☐	90 DGE CNG System		$ 50,784
☐	105 DGE CNG System		$ 57,999
	FET Exempt CNrG Tailgate Mounted CNG For 20YD Bodies Only- Includes Installation Fee		
☐	60 DGE CNG System		$ 45,541
☐	75 DGE CNG System		$ 47,329
☐	90 DGE CNG System		$ 53,436
☐	105 DGE CNG System		$ 60,652
	CNrG Options		
☐	Front Bumper Fill with Kill Cap		$ 1,329
☐	Remote Fill, StreetSide Rear Fill Port		$ 2,318
☐	Remote Fill, Curbside Rear Fill Port		$ 2,318
☐	Defuel Transfer Hose - 35 ft.		$ 2,034
	CNG Installation - Top of Body Installation		
☐	CNG Installation Charge - Includes brackets, temporary tank rental, hardware, and mounting of CNG system		$ 5,969
	Extended Complete Body Warranty Options		
☐	Two (2) Year (Months 13-24) (Maximum 4,000 hrs. of Operation) Complete Heil Body Warranty Requires additional purchase of Infinity packer/eject cylinders from above		$ 4,671
☐	Three (3) Year (Months 13-36) (Maximum 6,000 hrs. of Operation) Complete Heil Body Warranty Requires additional purchase of Infinity packer/eject cylinders from above		$ 8,013
☐	Four (4) Year (Months 13-48) (Maximum 8,000 hrs. of Operation) Complete Heil Body Warranty Requires additional purchase of Infinity packer/eject cylinders from above		$ 11,284
☐	Five (5) Year (Months 13-60) (Maximum 10,000 hrs. of Operation) Complete Heil Body Warranty Requires additional purchase of Infinity packer/eject cylinders from above		$ 15,126
	Extended Cylinder Warranty Options		
☐	Two (2) Year (Months 13-24) (Maximum 4,000 hrs. of Operation) All other Non-Infinity Cylinder Warranty - Requires additional purchase of Infinity packer/eject cylinders from above		$ 1,030
☐	Three (3) Year (Months 13-36) (Maximum 6,000 hrs. of Operation) All other Non-Infinity Cylinder Warranty - Requires additional purchase of Infinity packer/eject cylinders from above		$ 2,065
☐	Four (4) Year (Months 13-48) (Maximum 8,000 hrs. of Operation) All other Non-Infinity Cylinder Warranty - Requires additional purchase of Infinity packer/eject cylinders from above		$ 3,095
☐	Five (5) Year (Maximum 10,000 hrs. of Operation) All other Non-Infinity Cylinder Warranty - Requires purchase of Infinity packer or eject Cylinders from above		$ 3,605
	Extended Hydraulic Pump and Valve Warranty Options		
☐	Two (2) Year (Months 13-24) (Maximum 4,000 hours of operation) Hydraulic Pump and Valve warranty *Not needed if purchasing extended complete body warranty*		$ 1,246
☐	Three (3) Year (Months 13-36) (Maximum 6,000 hours of operation) Hydraulic Pump and Valve warranty *Not needed if purchasing extended complete body warranty*		$ 2,421
☐	Four (4) Year (Months 13-48) (Maximum 8,000 hours of operation) Hydraulic Pump and Valve warranty *Not needed if purchasing extended complete body warranty*		$ 3,600
☐	Five (5) Year (Months 13-60) (Maximum 10,000 hours of operation) Hydraulic Pump and Valve warranty *Not needed if purchasing extended complete body warranty*		$ 6,232
	Paint Options		
	NOTE: LIST PAINT CODES ON PAINT DIAGRAM		
☐	Customized Paint Color - Paint Color Code NOT included in the Color Smart Brochure		$ 417
☐	Two Tone Paint		$ 1,576
☐	Paint Striping - first stripe		$ 1,329
☐	Paint Striping - each additional stripe		$ 742
☐	Metallic Paint		$ 7,210
☐	Clear coat Finish		$ 1,844
☐	Anti-Graffiti Clear coat Finish		$ 2,652
☐	Prime Paint Only - deduct		$ (1,220)
☐	Heil CleanShield™ by BrandArmor™ Cab protector decal.		$ 1,432
	TOTALS		
	Total from Options Above (MSRP)		$ -
	Additional Options (SOARs, Chassis Mods, Etc.) Total		
	Subtotal		$ -
	Dealer Discount (%)	0%	$ -
	Dealer Net Price		$ -
	Surcharge if Applicable		$ -
	Additional Discount (SPR)		
	Freight		
	Total Price per Unit		$ -

Return to Index Page

Half/Pack® Sierra Commercial

Featuring Odyssey TM Controls

Paint Stripe and Accessory Requirements

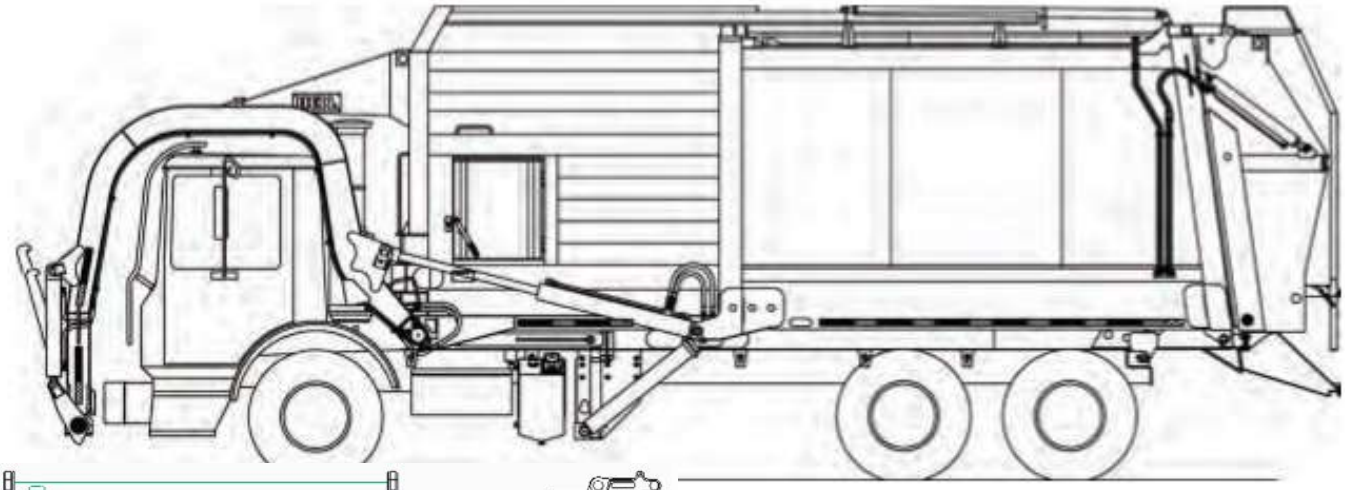

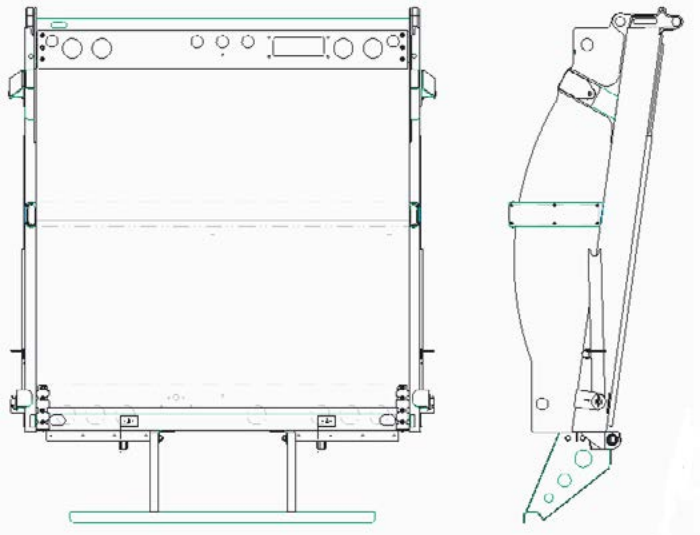

PAINT AND OPTIONS LAYOUT DETAIL

USE THIS FORM TO DESCRIBE PAINT SCHEMES

BE SPECIFIC ABOUT DIMENSIONS AND DETAILS

Sales Order #		Submitted by	
Customer			
Paint Color and Code 1			
Paint Color and Code 2			
Paint Color and Code 3			
Chassis Make			
Chassis Model			
Wheelbase			
Body Size		Approved by	

Half/Pack® Freedom Commercial

Featuring Odyssey™ Controls

Standard Equipment Features included in Base Price

- Hinged and completely sealed left-side body access door with step and grab handle
- Full aluminum cab shield with air cylinder assisted raise
- 3” underbody gate valve on street side for liquid removal
- Front head closure screen with splash guard
- Body service props for service lift
- Tailgate service props
- Fully automatic Shur-Lock™ tailgate locks
- Clamp-on arms
- 8,000 lb. capacity arms - WASTEC WRP 06-1996 rated
- Four arm shaft bearing supports
- Bolt-on rubber arm stops
- Heavy-duty forks - 1” thick x 59” grip length
- PTO mounted load sense piston pump
- Streetwise Hydraulics™
- Chassis frame-mounted aluminum oil tank with level / temperature gauge and suction shut-off valve
- 3-micron return line filter with magnetic trap and in-cab filter bypass monitor
- High-pressure filter kit
- Heil Optimum Payload System - HOPS™
- 100-micron suction line strainer
- Abrasion-resistant hydraulic hoses
- Cortex Controller ™ with InSight™ diagnostic display with integrated 3rd Eye camera feed
- Throttle advance / throttle limit kit
- Left-hand single joystick
- Complete array of in-cab function indicator lights on in cab display
- 5 lb. in-cab fire extinguisher
- Solid-state control panel
- Safety triangle
- Chrome-plated cylinder rods
- Tailgate lock & closed indicator sensor with in cab indicator and alarm
- Remote I/O for tailgate valve
- Greaseless tailgate hinge and lift cylinders
- Hydraulic oil temperature sensor with alarm
- Body hydraulic pressure sensor
- Backup alarm
- Hopper flood light
- Low oil level sensor light, buzzer, and pump shut-off
- Severe-duty wear bar kit
- Remote packer lube kit
- Shovel kit mounted on back of the packer
- Arm / fork overweight warning kit
- Backup light and license plate light
- LED center-mounted brake light
- LED duplicate high and low mount stop, turn, and tail lights
- LED mid-body turn signals
- Strobe light, amber mounted on lower tailgate - in-cab switch, pump on, and reverse activated
- Front and rear mud flaps - anti-sail / anti-splash
- Rear under ride guard
- 20 lb. fire extinguisher
- FMVSS #108 clearance lights & reflectors
- ICC reflective tape
- Rear camera bracket and flood lights - reverse activated
- Body undercoating
- Customer’s choice of one color finish paint from Color Smart brochure
- Standard 1-year warranty (2,000 Hours of Operation)
- ANSI Z 245.1-2017 compliant
- Cavity and joint sealer
- Remote lube for center arm bearing blocks
- Push Button controls with expanded system status notification
- Zinc Plated Hydraulic Tubes

Return to Index Page

2020 Half/Pack® Freedom Commercial Featuring Odyssey ™ Controls - Sales Order Form		
Base Units Half/Pack® Freedom Commercial Featuring Odyssey ™ Controls		
20 Cubic Yard		$ 150,810
23 cubic yard		$ 150,235
28 cubic yard		$ 150,810
Add Sumps to Body		$ 742
Service Hoist Kit - 187" Wheelbase 5 Axle Units WILL NOT accept the service hoist option*		$ 4,656
*5 Axle 187" Wheelbase - Hendrickson Auxiliary Axles Only with 275/R70/22.5 or smaller tires.		
Hopper Size		12 yd³
CHASSIS MUST COMFORM WITH HEIL'S MOST CURRENT CHASSIS SPECIFICATIONS AT WWW.HEIL.COM		
Mounting Options		
Full Factory Mount for Service Hoist or Serviceable Eject - Includes Body Props and Rear Pivot		$ 5,840
Mount at Dealer Destination		$ 783
Power Take Off / Pump Options		
PTO Mounted Load Sense Piston pump - Includes PTO		STD
Commercial Gripper		
Commercial Gripper attachment to the fork cross shaft to service 32-96 gallon residential containers (Commercial Grabbers add 6.5" of overall height when arms are fully raised and forks fully tucked *By selection this option you are confirming that understand the unit will be over 13' 6" when the arms are fully raised and the forks are fully tucked*		$ 7,468
Adjustable Fork's Options		
Hydraulically Adjustable Side Pocket Forks in lieu of standard Fork Cross Shaft *Will not work in conjunction with Curotto Commercial Gripper*		$ 8,240
Hydraulically Adjustable Bottom Pocket Forks in lieu of standard Fork Cross Shaft *Will not work in conjunction with Curotto Can or Curotto Commercial Gripper attachments*		$ 11,845
Control Options		
Left Hand Dual Axis Joystick - Air Controlled		STD
Left Hand 2 Lever In-Cab Air Controls in lieu of Joystick		$ 572
StreetSide mounted Outside 4 Button Electric Push Button Controls for Arms, Forks, and Packer circuits. (Throttle Advance Not Included)		$ 2,477
StreetSide mounted Outside Dual Lever controls and 4 Button Electric Push Button Controls for Pump Enable, Arms, Forks, and Packer circuits. Includes Throttle advance.		$ 2,884
Upgrade to **12"** In Cab Display in lieu of **7"** Std (Non- 3rd Eye Camera Units Only) - See 3rd Eye below for 12" Display with camera options)		$ 1,000
Heil® Autonomous Lift Option [H.A.L.O.]		$ 3,500
Lighting and Electrical Accessories		
Single LED Windscreen Mounted Container Light		$ 628
Multi-Function LED Strobe / Turn Lamps		$ 649
Body Side Backing Assist Lights - LED		$ 536
Dual Oval Flat LED Strobes Mounted Mid-T/G - in-cab switch, pump on, and reverse activated		$ 1,123
Dual Cab Guard Mounted Flood Lights		$ 525
Preco™ Back up Alarm		$ 773
Dual LED Cab Mounted Oval Strobe Lights		$ 770
Whelen Strobe Lights Kit		$ 3,750
Cab Shield Mounted LED Light - Facing reward toward hopper opening		$ 628
AWTI ™ Radar Systems		
AWTI™ Radar System used in conjunction with 3rd Eye Cameras -Must Select Camera Kit From 3rd Eye Camera Options		$ 2,359
3rd Eye® Camera Systems & 3rd® Eye Digital		
Note: Camera systems will accommodate a maximum of 6 cameras, not including driver and forward facing cameras included in 3rd Eye® Digital system		
Base 3rd Eye® Single Camera System with **7"** monitor and Single Camera Mounted on Tailgate		$ 2,148
Upgraded base 3rd Eye® Single Camera System with **12"** Monitor and Single Camera Mounted on Tailgate		$ 3,148
Add on 3rd Eye® Camera (LH Cab) - Camera System Price Adder (Only available if base camera is selected)		$ 572
Add on 3rd Eye® Camera (RH Cab) - Camera System Price Adder (Only available if base camera is selected)		$ 572
Add on 3rd Eye® Camera (LH Alley) - Camera System Price Adder (Only available if base camera is selected)		$ 572
Add on 3rd Eye® Camera (RH Alley) - Camera System Price Adder (Only available if base camera is selected)		$ 572
Add on 3rd Eye® Camera (Hopper) - Camera System Price Adder (Only available if base camera is selected)		$ 572
3rd Eye® Digital System: Includes (Driver and Forward Facing Camera (Window Unit), and Gateway - (In-Cab Monitor Not Included) - *Digital monitoring service not included and must be purchased and activated though 3rd Eye post delivery *		$ 3,317
Load Cell Scale Systems		
Heil Optimum Payload System (HOPS) using Air-Weigh Axle Scales		$ 9,275
Air-Weigh™ Axle Scale System without Interlock		$ 8,652
Auxiliary Axles Options		
* NOTE: All axles MUST BE installed with tires so chassis can be re-certified to new GAWR and GVWR ratings		
Watson & Chalin™ Options		
Watson & Chalin™ Self Steering Pusher Axle: 13,500 pound capacity, hub piloted or 20" spoke wheel hubs, automatic slack adjusters, type 16 air chambers, steering stabilizer kit and reverse lift kit -		$ 11,958
Watson & Chalin™ Self Steering Tag Axle: 13,500 pound capacity, hub piloted or 20" spoke wheel hubs, automatic slack adjusters, type 16 air chambers, steering stabilizer kit and reverse lift kit, includes Tag Axle Spill Shield		$ 12,288
Watson & Chalin™ Rigid Pusher Axle: 25,000 pound capacity, hub piloted or 20" spoke wheel hubs, 30/30 brake chambers, automatic slack adjusters, 1,300 cubic inch air tank and regulator kit		$ 15,017
Watson & Chalin™ Rigid Tag Axle: 25,000 pound capacity, hub piloted or 20" spoke wheel hubs, 30/30 brake chambers, automatic slack adjusters, 1,300 cubic inch air tank and regulator kit, includes Tag Axle Spill Shield		$ 15,337
Hendrickson™ Options		
Hendrickson™ Pusher Axle-13.500 pound capacity, Non-Steerable		$ 12,041
Hendrickson™ Pusher Axle-13.500 pound capacity, Steerable		$ 12,360
Hendrickson™ Tag Axle-13.500 pound capacity, Steerable, includes Tag Axle Spill Shield		$ 12,360
Hendrickson™ Tag Axle-13.500 pound capacity, Non- Steerable, includes Tag Axle Spill Shield		$ 12,041
Hendrickson™ Steerable Pusher Axle: 20,000 pound capacity		$ 15,229
Hendrickson™ Steerable Tag Axle: 20,000 pound capacity, includes Tag Axle Spill Shield		$ 15,548
* Note: All auxiliary applications must be approved by Heil prior to order acceptance		
Auxiliary Axle Tire Options		
255/70R-22.5 - Qty(2) load range H, 5,510 pound single max load at 120 psi with Steel Wheels		$ 2,379
275/70R-22.5 - Qty(2) load range H, 7,000 pound single max load at 120 psi with Steel Wheels		$ 3,008
Upgrade to Polished Aluminum Wheels (Set of Two)		$ 1,545
Body Options		
Sliding Top Door - Aluminum - May not be compatible with roof mounted CNG system		$ 5,155
Tailgate Mounted Aluminum Roof Access Ladder (Only one selection allowed) Not Available with CNrG Tailgate option		$ 1,859
Tailgate Mounted Roof Access Ladder Steel (Only one selection allowed) *Not available with CNrG Tailgate Option*		$ 1,427
Curbside Mounted Roof Access Ladder (Only one selection allowed) *Not Available on 23yd body with Top Door*		$ 1,427
Hopper Floor Liner (3/16" - AR400)		$ 1,906
Hopper Floor Liner (1/4" - AR400)		$ 3,033
Body Floor Liner (3/16" - AR400)		$ 2,163
Body Side Wall Liners (3/16 - AR400)		$ 1,854
Packer Mounted Retainer Teeth		$ 773
Body Roof Retainer Teeth - 2 Rows at the front of the body - Minimizes Spring Back In Cardboard and Recycling Applications		$ 1,107
Packer Follower - Reduces Garbage/Recycle Behind the Packer **(Includes Inverted Style cab protector) Other cab protectors not compatible with this option.**		$ 1,674
High Pressure Filter Monitor		$ 711
Second 20 lb. Fire Extinguisher (Will be mounted to Curb side Hopper, if unable will be mounted under body)		$ 525
Tool Box Bumper Mount - Steel 18"x18"x24"		$ 814
Tool Box Bumper Mount - Aluminum 18"x18"x24"		$ 963
Tool Box Bumper Mount - Poly - 18"x18"x24"		$ 731
Extendable Broom Kit - Mounted Curbside of Body (Not Available on 20/23 Yd)		$ 438
Extendable Broom Kit - Mounted Under Body		$ 438
Street Side of Body Mounted Shovel Bracket Kit		$ 250

2020 Half/Pack® Freedom Commercial Featuring Odyssey ™ Controls - Sales Order Form			
☐	Cab Protector Extension Raise - Manual Jack - Will Receive Steel Cab Shield in Lieu of Aluminum		$ 1,210
☐	Hydraulic Raise Cab Protector Kit - Cab Shield Fully Rotates into the Hopper - Will Receive Steel Cab Shield in Lieu of Aluminum		$ 5,660
☐	Steel Cab Protector		$ 2,009
☐	Aluminum Cab Protector Extension For Autocar Chassis		$ 664
☐	Rear Caution Decal		$ 304
☐	Wheel Chock Kit - Dual (Mounted Under Body)		$ 170
☐	Wheel Chock Kit - Dual (Mounted on Curbside Body)		$ 170
☐	Cable Fall Protection Kit		$ 3,610
☐	D-Ring Fall Protection		$ 876
☐	Hydraulic Oil Tank Quick Disconnect Kit - For use with filter buggy		$ 865
☐	Service Loop Plumbing - Butterfly Style Quick Disconnects		$ 625
☐	Spill Kit included mounting brackets - (Mounted on Front Head)		$ 361
☐	Spill Kit (In Toolbox) *Requires additional purchase of a tool box*		$ 335
☐	Hydraulic Oil Tank Heater - 500 watts		$ 1,262
☐	Bolt On Fender Extension Kit - Keeps Body Clean of Road Spray		$ 773
☐	California Back Up Alarm		$ 716
☐	Infinity Series Packer/Eject Cylinders with scrapers and hardened rods to 50 HRC - Includes Five (5) Year Packer/Eject Cylinder Only Warranty that covers dents and dings (This Option is Required if purchasing extended warranty's below)		$ 3,245
☐	Lightning Cylinder Package: reduces front loader arm cycle time by up to 5 seconds and reduces front loader arm lifting capacity to a maximum of 5,500 lbs. This package is available via Custom request only, and also requires an End User signed waiver acknowledging the reduced arm lifting capacity of these cylinders.		(Custom Required)
CNrG Tailgate Mounted CNG - Includes Installation Fee			
☐	60 DGE CNG System		$ 42,889
☐	75 DGE CNG System		$ 44,676
☐	90 DGE CNG System		$ 50,784
☐	105 DGE CNG System		$ 57,999
FET Exempt CNrG Tailgate Mounted CNG For 20YD Bodies Only- Includes Installation Fee			
☐	60 DGE CNG System		$ 45,541
☐	75 DGE CNG System		$ 47,329
☐	90 DGE CNG System		$ 53,436
☐	105 DGE CNG System		$ 60,652
CNrG Options			
☐	Front Bumper Fill with Kill Cap		$ 1,329
☐	Remote Fill, StreetSide Rear Fill Port		$ 2,318
☐	Remote Fill, Curbside Rear Fill Port		$ 2,318
☐	Defuel Transfer Hose - 35 ft.		$ 2,034
CNG Installation - Top of Body Installation			
☐	CNG Installation Charge - Includes brackets, temporary tank rental, hardware, and mounting of CNG system		$ 5,969
Extended Complete Body Warranty Options			
☐	Two (2) Year (Months 13-24) (Maximum 4,000 hrs. of Operation) Complete Heil Body Warranty Requires additional purchase of Infinity packer/eject cylinders from above		$ 4,671
☐	Three (3) Year (Months 13-36) (Maximum 6,000 hrs. of Operation) Complete Heil Body Warranty Requires additional purchase of Infinity packer/eject cylinders from above		$ 8,013
☐	Four (4) Year (Months 13-48) (Maximum 8,000 hrs. of Operation) Complete Heil Body Warranty Requires additional purchase of Infinity packer/eject cylinders from above		$ 11,284
☐	Five (5) Year (Months 13-60) (Maximum 10,000 hrs. of Operation) Complete Heil Body Warranty Requires additional purchase of Infinity packer/eject cylinders from above		$ 15,126
Extended Cylinder Warranty Options			
☐	Two (2) Year (Months 13-24) (Maximum 4,000 hrs. of Operation) All other Non-Infinity Cylinder Warranty - Requires additional purchase of Infinity packer/eject cylinders from above		$ 1,030
☐	Three (3) Year (Months 13-36) (Maximum 6,000 hrs. of Operation) All other Non-Infinity Cylinder Warranty - Requires additional purchase of Infinity packer/eject cylinders from above		$ 2,065
☐	Four (4) Year (Months 13-48) (Maximum 8,000 hrs. of Operation) All other Non-Infinity Cylinder Warranty - Requires additional purchase of Infinity packer/eject cylinders from above		$ 3,095
☐	Five (5) Year (Months 13-60) (Maximum 10,000 hrs. of Operation) All other Non-Infinity Cylinder Warranty - Requires additional purchase of Infinity packer/eject cylinders from above		$ 3,605
Extended Hydraulic Pump and Valve Warranty Options			
☐	Two (2) Year (Months 13-24) (Maximum 4,000 hours of operation) Hydraulic Pump and Valve warranty *Not needed if purchasing extended complete body warranty*		$ 1,246
☐	Three (3) Year (Months 13-36) (Maximum 6,000 hours of operation) Hydraulic Pump and Valve warranty *Not needed if purchasing extended complete body warranty*		$ 2,421
☐	Four (4) Year (Months 13-48) (Maximum 8,000 hours of operation) Hydraulic Pump and Valve warranty *Not needed if purchasing extended complete body warranty*		$ 3,600
☐	Five (5) Year (Months 13-60) (Maximum 10,000 hours of operation) Hydraulic Pump and Valve warranty *Not needed if purchasing extended complete body warranty*		$ 6,232
Paint Options			
NOTE: LIST PAINT CODES ON PAINT DIAGRAM			
☐	Customized Paint Color - Paint Color Code NOT included in the Color Smart Brochure		$ 417
☐	Two Tone Paint		$ 1,576
☐	Paint Striping - first stripe		$ 1,329
☐	Paint Striping - each additional stripe		$ 742
☐	Metallic Paint		$ 7,210
☐	Clear coat Finish		$ 1,844
☐	Anti-Graffiti Clear coat Finish		$ 2,652
☐	Prime Paint Only - deduct		$ (1,220)
☐	Heil CleanShield™ by BrandArmor™ Cab protector decal.		$ 1,432
TOTALS			
	Total from Options Above (MSRP)		$ -
	Additional Options (SOARs, Chassis Mods, Etc.) Total		$ -
	Subtotal		$ -
	Dealer Discount (%)	0%	$ -
	Dealer Net Price		$ -
	Surcharge if Applicable		$ -
	Additional Discount (SPR)		
	Freight		
	Total Price per Unit		$ -

Return to Index Page

Half/Pack® Freedom Commercial

Featuring Odyssey™ Controls

Paint Stripe and Accessory Requirements

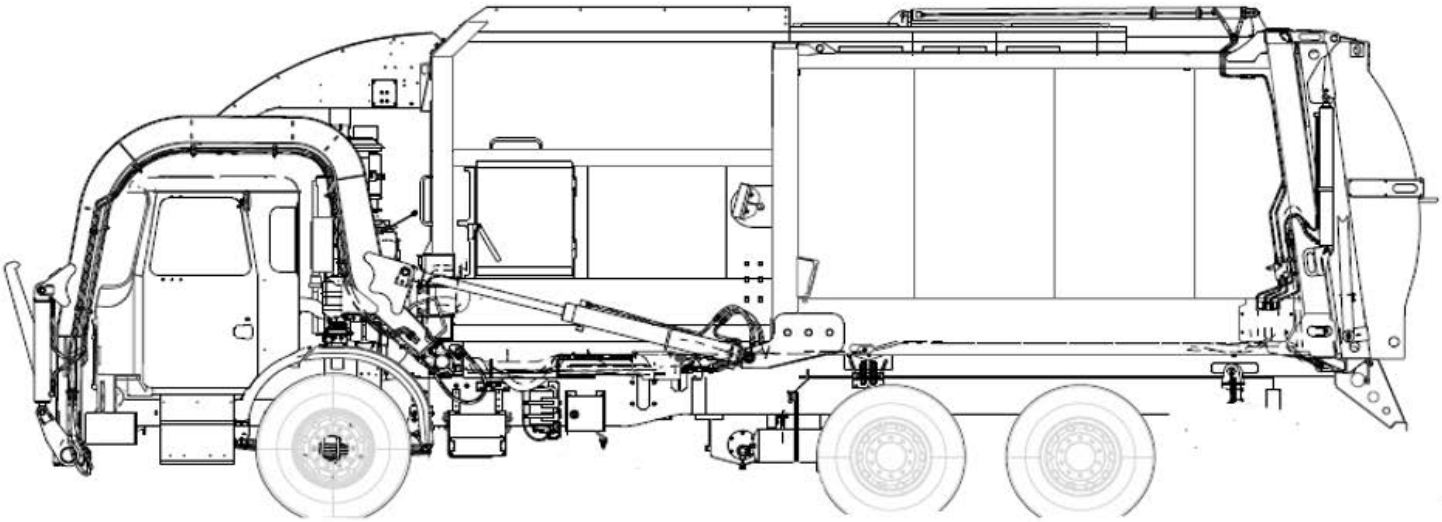

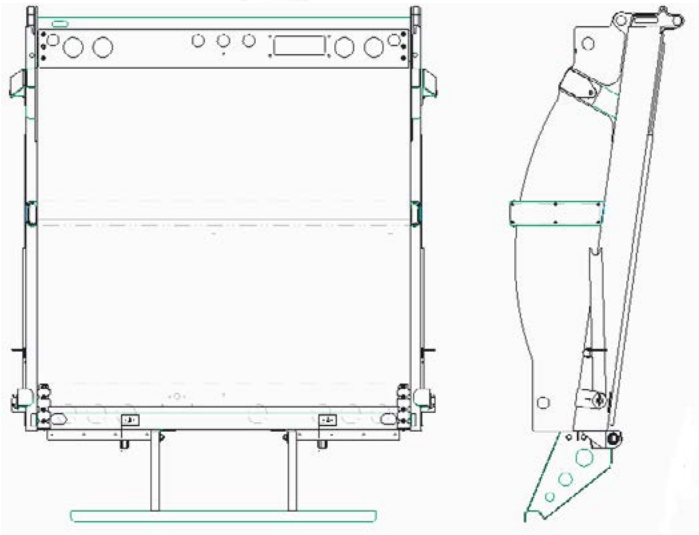

PAINT AND OPTIONS LAYOUT DETAIL
USE THIS FORM TO DESCRIBE PAINT SCHEMES
BE SPECIFIC ABOUT DIMENSIONS AND DETAILS

Sales Order #		Submitted by	
Customer			
Paint Color and Code 1			
Paint Color and Code 2			
Paint Color and Code 3			
Chassis Make			
Chassis Model			
Wheelbase			
Body Size		Approved by	

Half/Pack® LowRider
Commercial

Standard Equipment Features included in Base Price

- Hinged and completely sealed left-side body access door with step and grab handle
- Full aluminum cab shield with air cylinder assisted raise
- 3” underbody gate valve on street side for liquid removal
- Front head closure screen with splash guard
- Body service props for service lift
- Tailgate service props
- Fully automatic Shur-Lock™ tailgate locks
- Clamp-on arms
- 8,000 lb. capacity arms - WASTEC WRP 06-1996 rated
- Four arm shaft bearing supports
- Bolt-on rubber arm stops
- Heavy-duty forks - 1” thick x 59” grip length
- PTO mounted load sense piston pump
- Streetwise Hydraulics™
- Chassis frame-mounted aluminum oil tank with level / temperature gauge and suction shut-off valve
- 3-micron return line filter with magnetic trap and in-cab filter bypass monitor
- High-pressure filter kit
- 100-micron suction line strainer
- Abrasion-resistant hydraulic hoses
- Zinc Plated Hydraulic Tubes
- Cortex Controller ™ with InSight™ diagnostic display with integrated 3rd Eye camera feed
- Throttle advance / throttle limit kit
- Left-hand single joystick
- Complete array of in-cab function indicator lights on in cab display
- 5 lb. in-cab fire extinguisher
- Solid-state control panel
- Safety triangle
- Chrome-plated cylinder rods
- Lightning Arm Cylinder Package
- Aluminum Top Door
- Tailgate lock & closed indicator sensor with in cab indicator and alarm
- Remote I/O for tailgate valve
- Greaseless tailgate hinge and lift cylinders
- Hydraulic oil temperature sensor with alarm
- Body hydraulic pressure sensor
- Backup alarm
- Hopper flood light
- Low oil level sensor light, buzzer, and pump shut-off
- Severe-duty wear bar kit
- Remote packer lube kit
- Shovel kit mounted on back of the packer
- Arm / fork overheight warning kit
- Backup light and license plate light
- LED center-mounted brake light
- LED duplicate high and low mount stop, turn, and tail lights
- LED mid-body turn signals
- Strobe light, amber mounted on lower tailgate - in-cab switch, pump on, and reverse activated
- Front and rear mud flaps - anti-sail / anti-splash
- Rear under ride guard
- 20 lb. fire extinguisher
- FMVSS #108 clearance lights & reflectors
- ICC reflective tape
- Rear camera bracket and flood lights - reverse activated
- Body undercoating
- Customer’s choice of one color finish paint from Color Smart brochure
- Standard 1-year warranty (2,000 Hours of Operation)
- ANSI Z 245.1-2017 compliant
- Cavity and joint sealer
- Remote lube for center arm bearing blocks
- Push Button controls with expanded system status notifications.

Return to Index Page

2020 Half/Pack® LowRider™ - Commercial Sales Order Form		
Base Units Half/Pack® LowRider™ Commercial With Odyssey ™ Controls		
☐ 20 cubic yard CNrG Tailgate Not Available With This Body Size		$ 152,995
☐ 23 cubic yard Note : If chosen CNrG Tailgate Reduces Tailgate Capacity by 2 Cubic Yards - 21 Cubic Yard Unit With CNrG		$ 152,444
☐ 28 cubic yard Note : If chosen CNrG Tailgate Reduces Tailgate Capacity by 2 Cubic Yards - 26 Cubic Yard Unit With CNrG		$ 152,995
☐ Service Hoist Kit - 187" Wheelbase 5 Axle Units WILL NOT accept the service hoist option*		$ 4,656
*5 Axle 187" Wheelbase - Hendrickson Auxiliary Axles Only with 275/R70/22.5 or smaller tires.		
Hopper Size		
CHASSIS MUST COMFORM WITH HEIL'S MOST CURRENT CHASSIS SPECIFICATIONS AT WWW.HEIL.COM		
Mounting Options		
☐ Full Factory Mount for Service Hoist or Serviceable Eject - Includes Body Props and Rear Pivot		$ 5,840
☐ Mount at Dealer Destination		$ 783
Power Take Off / Pump Options		
☐ PTO Mounted Load Sense Piston pump - Includes PTO		
Commercial Gripper Option		
☐ Commercial Gripper attachment to the fork cross shaft to service 32-96 gallon residential containers (Commercial Grabbers add 6.5" of overall height when arms are fully raised and forks fully tucked)		$ 7,468
Adjustable Fork's Options		
☐ Hydraulically Adjustable Side Pocket Forks in lieu of standard Fork Cross Shaft *Will not work in conjunction with Curotto Commercial Gripper*		$ 8,240
☐ Hydraulically Adjustable Bottom Pocket Forks in lieu of standard Fork Cross Shaft *Will not work in conjunction with Curotto Can or Curotto Commercial Gripper attachments*		$ 11,845
Control Options		
☐ Left Hand Dual Axis Joystick - Electric Controlled		STD
☐ Left Hand 2 Lever In-Cab Electric Controls in lieu of Joystick		$ 572
☐ StreetSide mounted Outside 4 Button Electric Push Button Controls for Arms, Forks, and Packer circuits. (Throttle Advance Not Included)		$ 2,477
☐ StreetSide mounted Outside Dual Lever controls and 4 Button Electric Push Button Controls for Pump Enable, Arms, Forks, and Packer circuits. Includes Throttle advance.		$ 2,884
☐ Upgrade to **12"** In Cab Display in lieu of **7"** Std (Non- 3rd Eye Camera Units Only) - See 3rd Eye below for 12" Display with camera options)		$ 1,000
☐ Heil® Autonomous Lift Option [H.A.L.O.]		$ 3,500
Lighting and Electrical Accessories		
☐ Single LED Windscreen Mounted Container Light		$ 628
☐ Multi-Function LED Strobe / Turn Lamps		$ 649
☐ Body Side Backing Assist Lights - LED		$ 536
☐ Dual Oval Flat LED Strobes Mounted Mid-T/G - in-cab switch, pump on, and reverse activated		$ 1,123
☐ Dual Cab Guard Mounted Flood Lights		$ 525
☐ Preco™ Back Up Alarm		$ 773
☐ Dual LED Cab Mounted Oval Strobe Lights		$ 770
☐ Whelen Strobe Lights Kit		$ 3,750
☐ Cab Shield Mounted LED Light Facing reward toward hopper opening		$ 628
AWTI ™ Radar Systems		
☐ AWTI™ Radar System used in conjunction with 3rd Eye Cameras - Must Select Camera Kit From 3rd Eye Camera Options		$ 2,359
Camera Systems		
All camera systems are mounted with protective camera brackets and twin tailgate flood lights.		
CAMERA MONITOR LOCATION WILL BE CAB ROOF MOUNTED		
Swivel monitor bracket will be provided for dual drive chassis		
3rd Eye® Camera Systems & 3rd® Eye Digital		
Note: Camera systems will accommodate a maximum of 6 cameras, not including driver and forward facing cameras included in 3rd Eye® Digital system		
☐ Base 3rd Eye® Single Camera System with **7"** Monitor and Single Camera Mounted on Tailgate		$ 2,148
☐ Upgraded base 3rd Eye® Single Camera System with **12"** Monitor and Single Camera Mounted on Tailgate		$ 3,148
☐ Add on 3rd Eye® Camera (LH Cab) - Camera System Price Adder (Only available if base camera is selected)		$ 572
☐ Add on3rd Eye® Camera (RH Cab) - Camera System Price Adder (Only available if base camera is selected)		$ 572
☐ Add on 3rd Eye® Camera (LH Alley) - Camera System Price Adder (Only available if base camera is selected)		$ 572
☐ Add on 3rd Eye® Camera (RH Alley) - Camera System Price Adder (Only available if base camera is selected)		$ 572
☐ Add on 3rd Eye® Camera (Hopper) - Camera System Price Adder (Only available if base camera is selected)		$ 572
☐ 3rd Eye® Digital System: Includes (Driver and Forward Facing Camera (Window Unit), and Gateway - (In-Cab Monitor Not Included) *Digital monitoring service not included and must be purchased and activated though 3rd Eye post delivery *		$ 3,317
Load Cell Scale Systems		
☐ Heil Optimum Payload System (HOPS) using Air-Weigh Axle Scales		$ 9,275
☐ Air-Weigh™ Axle Scale System without Interlock		$ 8,652

Return to Index Page

	Auxiliary Axles Options		
	*** NOTE: All axles MUST BE installed with tires so chassis can be re-certified to new GAWR and GVWR ratings**		
	Watson & Chalin™ Options		
☐	Watson & Chalin™ Self Steering Pusher Axle: 13,500 pound capacity, hub piloted or 20" spoke wheel hubs, automatic slack adjusters, type 16 air chambers, steering stabilizer kit and reverse lift kit -		$ 11,958
☐	Watson & Chalin™ Self Steering Tag Axle: 13,500 pound capacity, hub piloted or 20" spoke wheel hubs, automatic slack adjusters, type 16 air chambers, steering stabilizer kit and reverse lift kit, includes Tag Axle Spill Shield		$ 12,288
☐	Watson & Chalin™ Rigid Pusher Axle: 25,000 pound capacity, hub piloted or 20" spoke wheel hubs, 30/30 brake chambers, automatic slack adjusters, 1,300 cubic inch air tank and regulator kit		$ 15,017
☐	Watson & Chalin™ Rigid Tag Axle: 25,000 pound capacity, hub piloted or 20" spoke wheel hubs, 30/30 brake chambers, automatic slack adjusters, 1,300 cubic inch air tank and regulator kit, includes Tag Axle Spill Shield		$ 15,337
	Hendrickson™ Options		
☐	Hendrickson™ Pusher Axle-13.500 pound capacity, Non-Steerable		$ 12,041
☐	Hendrickson™ Pusher Axle-13.500 pound capacity, Steerable		$ 12,360
☐	Hendrickson™ Tag Axle-13.500 pound capacity, Steerable, includes Tag Axle Spill Shield		$ 12,360
☐	Hendrickson™ Tag Axle-13.500 pound capacity, Non- Steerable, includes Tag Axle Spill Shield		$ 12,041
☐	Hendrickson™ Steerable Pusher Axle: 20,000 pound capacity		$ 15,229
☐	Hendrickson™ Steerable Tag Axle: 20,000 pound capacity, includes Tag Axle Spill Shield		$ 15,548
	* Note: All auxiliary applications must be approved by Heil prior to order acceptance		
	Auxiliary Axle Tire Options		
☐	255/70R-22.5 - Qty(2) load range H, 5,510 pound single max load at 120 psi with Steel Wheels		$ 2,379
☐	275/70R-22.5 - Qty(2) load range H, 7,000 pound single max load at 120 psi with Steel Wheels		$ 3,008
☐	Upgrade to Polished Aluminum Wheels (Set of Two)		$ 1,545
	Body Options		
☐	Sliding Top Door - Steel - May not be compatible with roof mounted CNG system		$ 4,656
☐	Hopper Windscreen - (Option should be chosen when dumping smaller container such as 2,4, or 6 yard)		$ 2,724
☐	Tailgate Mounted Roof Access Ladder Steel (Only one selection allowed) *Not available with CNrG Tailgate Option*		$ 1,427
☐	Curbside Mounted Roof Access Ladder (Only one selection allowed) *Not Available on 20yd body with Top Door*		$ 1,427
☐	Hopper Floor Liner (3/16" - AR400)		$ 1,906
☐	Hopper Floor Liner (1/4" - AR400)		$ 3,033
☐	Body Floor Liner (3/16" - AR400)		$ 2,163
☐	Packer Mounted Retainer Teeth		$ 773
☐	High Pressure Filter Monitor		$ 711
☐	Second 20 lb. Fire Extinguisher (Will be mounted to Curb side Hopper, if unable will be mounted under body)		$ 525
☐	Tool Box Bumper Mount - Steel 18"x18"x24"		$ 814
☐	Tool Box Bumper Mount - Aluminum 18"x18"x24"		$ 963
☐	Tool Box Bumper Mount - Poly - 18"x18"x24"		$ 731
☐	Extendable Broom Kit - Mounted Curbside of Body (Not Available on 20/23 Yd)		$ 438
☐	Extendable Broom Kit - Mounted Under Body		$ 438
☐	Cab Protector Extension Raise - Manual Jack		$ 1,210
☐	Rear Caution Decal		$ 304
☐	Wheel Chock Kit - Dual (Mounted Under Body)		$ 170
☐	Wheel Chock Kit - Dual (Mounted on Curbside Body)		$ 170
☐	Cable Fall Protection Kit		$ 3,610
☐	D-Ring Fall Protection		$ 876
☐	Hydraulic Oil Tank Quick Disconnect Kit - For use with filter buggy		$ 865
☐	Service Loop Plumbing - Butterfly Style Quick Disconnects		$ 625
☐	Spill Kit included mounting brackets - (Mounted on Front Head)		$ 361
☐	Spill Kit (In Toolbox) *Requires additional purchase of a tool box*		$ 335
☐	Hydraulic Oil Tank Heater - 500 watts		$ 1,262
☐	Bolt On Fender Extension Kit - Keeps Body Clean of Road Spray		$ 773
☐	California Back Up Alarm		$ 716
☐	Infinity Series Packer/Eject Cylinders with scrapers and hardened rods to 50 HRC - Includes Five (5) Year Packer/Eject Cylinder Only Warranty that covers dents and dings (This Option is Required if purchasing extended warranty's below)		$ 3,245
☐	Standard Arm Cylinders for 8000# lift capacity - this option will reduce lift cycle time by 4s		$ 625
	CNrG Tailgate Mounted CNG - Includes Installation Fee		
☐	60 DGE CNG System		$ 42,889
☐	75 DGE CNG System		$ 44,676
☐	90 DGE CNG System		$ 50,784
	FET Exempt CNrG Tailgate Mounted CNG For 20YD Bodies Only- Includes Installation Fee		
☐	60 DGE CNG System		$ 45,541
☐	75 DGE CNG System		$ 47,329
☐	90 DGE CNG System		$ 53,436
	CNrG Options		
☐	Front Bumper Fill with Kill Cap		$ 1,329
☐	Remote Fill, StreetSide Rear Fill Port		$ 2,318
☐	Remote Fill, Curbside Rear Fill Port		$ 2,318
☐	Defuel Transfer Hose - 35 ft.		$ 2,034
	CNG Installation - Top of Body Installation		
☐	CNG Installation Charge - Includes brackets, temporary tank rental, hardware, and mounting of CNG system		$ 5,969

	Extended Complete Body Warranty Options		
☐	Two (2) Year (Months 13-24) (Maximum 4,000 hrs. of Operation) Complete Heil Body Warranty Requires additional purchase of Infinity packer/eject cylinders from above		$ 4,671
☐	Three (3) Year (Months 13-36) (Maximum 6,000 hrs. of Operation) Complete Heil Body Warranty Requires additional purchase of Infinity packer/eject cylinders from above		$ 8,013
☐	Four (4) Year (Months 13-48) (Maximum 8,000 hrs. of Operation) Complete Heil Body Warranty Requires additional purchase of Infinity packer/eject cylinders from above		$ 11,284
☐	Five (5) Year (Months 13-60) (Maximum 10,000 hrs. of Operation) Complete Heil Body Warranty Requires additional purchase of Infinity packer/eject cylinders from above		$ 15,126
	Extended Cylinder Warranty Options		
☐	Two (2) Year (Months 13-24) (Maximum 4,000 hrs. of Operation) All other Non-Infinity Cylinder Warranty - Requires additional purchase of Infinity packer/eject cylinders from above		$ 1,030
☐	Three (3) Year (Months 13-36) (Maximum 6,000 hrs. of Operation) All other Non-Infinity Cylinder Warranty - Requires additional purchase of Infinity packer/eject cylinders from above		$ 2,065
☐	Four (4) Year (Months 13-48) (Maximum 8,000 hrs. of Operation) All other Non-Infinity Cylinder Warranty - Requires additional purchase of Infinity packer/eject cylinders from above		$ 3,095
☐	Five (5) Year (Maximum 10,000 hrs. of Operation) All other Non-Infinity Cylinder Warranty - Requires purchase of Infinity packer or eject Cylinders from above		$ 3,605
	Extended Hydraulic Pump and Valve Warranty Options		
☐	Two (2) Year (Months 13-24) (Maximum 4,000 hours of operation) Hydraulic Pump and Valve warranty *Not needed if purchasing extended complete body warranty*		$ 1,246
☐	Three (3) Year (Months 13-36) (Maximum 6,000 hours of operation) Hydraulic Pump and Valve warranty *Not needed if purchasing extended complete body warranty*		$ 2,421
☐	Four (4) Year (Months 13-48) (Maximum 8,000 hours of operation) Hydraulic Pump and Valve warranty *Not needed if purchasing extended complete body warranty*		$ 3,600
☐	Five (5) Year (Months 13-60) (Maximum 10,000 hours of operation) Hydraulic Pump and Valve warranty *Not needed if purchasing extended complete body warranty*		$ 6,232
	Paint Options		
	NOTE: LIST PAINT CODES ON PAINT DIAGRAM		
☐	Customized Paint Color - Paint Color Code NOT included in the Color Smart Brochure		$ 417
☐	Two Tone Paint		$ 1,576
☐	Paint Striping - first stripe		$ 1,329
☐	Paint Striping - each additional stripe		$ 742
☐	Metallic Paint		$ 7,210
☐	Clear coat Finish		$ 1,844
☐	Anti-Graffiti Clear coat Finish		$ 2,652
☐	Prime Paint Only - deduct		$ (1,220)
	TOTALS		
	Total from Options Above (MSRP)		$ -
	Additional Options (Custom's, Chassis Mods, Etc.) Total		
	Subtotal		$ -
	Dealer Discount (%)	0%	$ -
	Dealer Net Price		$ -
	Surcharge if Applicable		$ -
	Additional Discount (SPR)		
	Freight		
	Total Price per Unit	$	-

Return to Index Page

Half/Pack® LowRider™

With Commerical Odyssey ™ Controls

Paint Stripe and Accessory Requirements

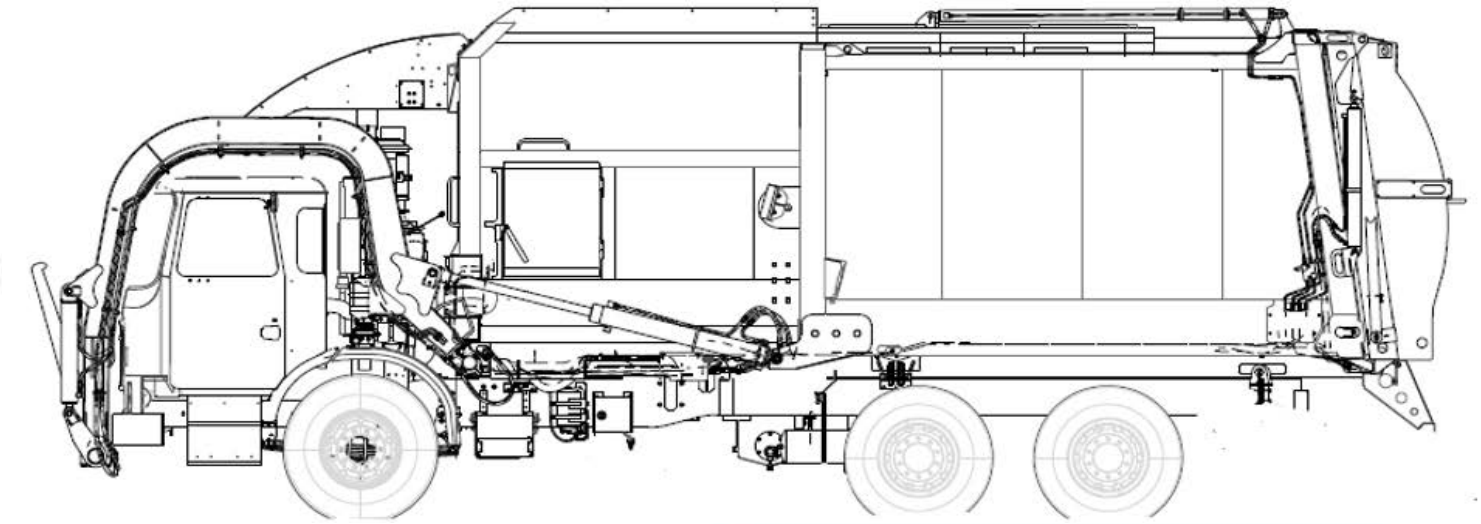

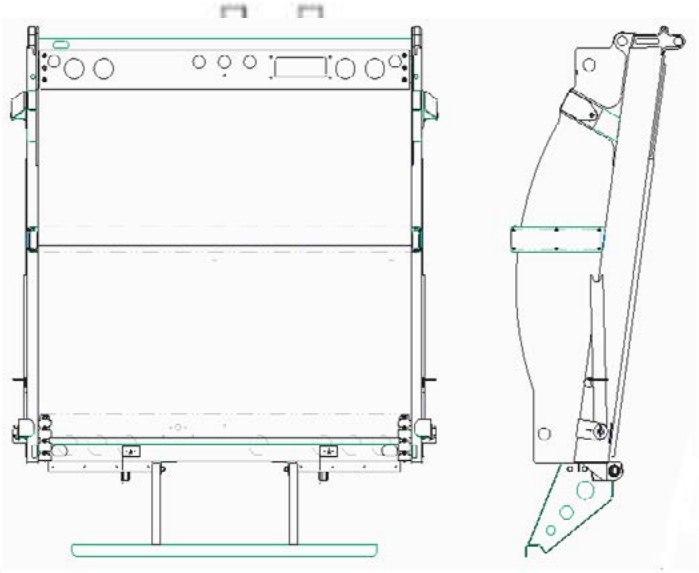

PAINT AND OPTIONS LAYOUT DETAIL
USE THIS FORM TO DESCRIBE PAINT SCHEMES
BE SPECIFIC ABOUT DIMENSIONS AND DETAILS

Sales Order #		Submitted by	
Customer			
Paint Color and Code 1			
Paint Color and Code 2			
Paint Color and Code 3			
Chassis Make			
Chassis Model			
Wheelbase			
Body Size		Approved by	

Half/Pack® LowRider™
Residential

Standard Equipment Features included in Base Price

- Hinged and completely sealed left-side body access door with step and grab handle
- Full aluminum cab shield with air cylinder assisted raise
- 3” underbody gate valve on street side for liquid removal
- Front head closure screen with splash guard
- Body service props
- Tailgate service props
- Fully automatic Shur-Lock™ tailgate locks
- Clamp-on arms
- 8,000 lb. capacity arms - WASTEC WRP 06-1996 rated
- Four arm shaft bearing supports
- Bolt-on rubber arm stops
- Heavy-duty forks - 1.5” thick x 63” grip length
- Chassis frame-mounted aluminum oil tank with level / temperature gauge and suction shut-off valve
- 3-micron return line filter with magnetic trap and in-cab filter bypass monitor
- 100-micron suction line strainer
- Abrasion-resistant hydraulic hoses
- Cortex Controller ™ with InSight™ diagnostic display with integrated 3rd Eye camera feed
- Throttle advance / throttle limit kit
- Left and right-hand multifunction joysticks
- Complete array of in-cab function indicator lights on in cab display
- Arm rest for operator controls
- 5 lb. in-cab fire extinguisher
- Solid-state control panel
- Tailgate lock & closed indicator sensor with in cab indicator and alarm
- PTO Mounted Load Sense Piston Pump with Hot Shift PTO
- Cavity coat and joint sealer
- Arm guides mounted to front bumper
- Lightning Arm Cylinder Package
- Zinc Plated Hydraulic Tubes
- Chrome-plated cylinder rods
- Hydraulic arm tube covers
- Remote I/O for tailgate valve and Curotto-Can
- Greaseless tailgate hinge and lift cylinders
- Hydraulic oil temperature sensor with alarm
- Body hydraulic pressure sensor
- Streetwise Hydraulics™
- Hopper flood light
- Low oil level sensor light, buzzer, and pump shut-off
- Severe-duty wear bar kit
- Remote packer lube kit
- Shovel kit mounted on back of the packer
- Arm / fork overheight warning kit
- Backup alarm, backup light and license plate light
- LED center-mounted brake light
- LED duplicate high and low mount stop, turn, and tail lights
- LED mid-body turn signals
- Strobe light, amber mounted on lower tailgate - in-cab switch, pump on, and reverse activated
- Front and rear mud flaps - anti-sail / anti-splash
- Rear under ride guard
- 20 lb. fire extinguisher
- FMVSS #108 clearance lights & reflectors
- ICC reflective tape
- Rear camera bracket and flood lights - reverse activated
- Body undercoating
- Customer’s choice of one color finish paint from Color Smart brochure
- Standard 1-year warranty (2,000 Hours of Operation)
- ANSI Z 245.1-2017 compliant
- Remote lube for center arm bearing blocks
- Push Button controls with expanded system status notifications.

Return to Index Page

2020 Half/Pack® LowRider™ - Residential Sales Order Form			
Base Units Half/Pack LowRider™ With Odyssey™ Controls			
☐	20 cubic yard CNrG Tailgate Not Available With This Body Size		$ 155,751
☐	23 cubic yard Note : If chosen CNrG Tailgate Reduces Tailgate Capacity by 2 Cubic Yards - 21 Cubic Yard Unit With CNrG		$ 156,305
☐	28 cubic yard Note : If chosen CNrG Tailgate Reduces Tailgate Capacity by 2 Cubic Yards - 26 Cubic Yard Unit With CNrG		$ 155,751
☐	Service Hoist Kit - 187" Wheelbase 5 Axle Units WILL NOT accept the service hoist option*		$ 4,656
	*5 Axle 187" Wheelbase - Hendrickson Auxiliary Axles Only with 275/R70/22.5 or smaller tires.		
CHASSIS MUST COMFORM WITH HEIL'S MOST CURRENT CHASSIS SPECIFICATIONS AT WWW.HEIL.COM			
Mounting Options			
☐	Full Factory Mount for Service Hoist or Serviceable Eject - Includes Body Props and Rear Pivot		$ 5,840
☐	Mount at Dealer Destination		$ 783
Power Take Off / Pump Options			
☐	PTO Mounted Load Sense Piston pump - Includes PTO		STD
Automated Option			
☐	Hopper Seal Brush Kit - Includes Sides and Front For Curotto Only		$ 2,724
☐	Remote Curbside Curotto Can Controls		$ 1,643
☐	Installation of Auto cover controls - Auto cover must be purchased with the Curotto Can		$ 1,643
☐	In-Cab controls for integrated forward work lamps - Forward Work lamps must be purchased with the Curotto Can		$ 664
☐	Hose Conversion Kit - Must be selected if utilizing a Curotto Can Built prior to 1/1/2018		STD if Needed
Semi-Automated Option			
☐	Curotto Can Control Kit - Must Select to Add Controls to Order		$ -
☐	Bayne Carry Can Control Kit - Must Select to Add Controls to Order		$ -
A complete selection of premium Bayne carry cans to suit any application is provided in this price book for your convenience			
Control Options			
☐	Dual Multifunction Joystick - Left and Right Hand		STD
☐	Left Hand 2-Lever Electric Control in lieu of Multifunction Joystick		$ 572
☐	Left Hand Dual Axis Joystick Electric Control in lieu of Multifunction Joystick		$ 572
☐	StreetSide mounted Outside 4 Button Electric Push Button Controls for Arms, Forks, and Packer circuits. (Throttle Advance Not Included)		$ 2,477
☐	StreetSide mounted Outside Dual Lever controls and 4 Button Electric Push Button controls for Pump Enable, Arms, Forks, and Packer circuits. Includes Throttle advance.		$ 2,884
☐	Upgrade to **12"** In Cab Display in lieu of **7"** Std (Non- 3rd Eye Camera Units Only) - See 3rd Eye below for 12" Display with camera options)		$ 1,000
Lighting and Electrical Accessories			
☐	Single Led Windscreen Mounted Container Light		$ 628
☐	Multi-Function Lights		$ 649
☐	Body Side Backing Assist Lights - LED		$ 536
☐	Dual Oval Flat LED Strobes Mounted Mid-T/G - in-cab switch, pump on, and reverse activated		$ 1,123
☐	Preco™ Back Up Alarm		$ 773
☐	Dual LED Cab Mounted Oval Strobe Lights		$ 770
☐	Whelen Strobe Lights Kit		$ 3,750
☐	Cab Shield Mounted LED Light Facing reward toward hopper opening		$ 628
AWTI ™ Radar Systems			
☐	AWTI™ Radar System used in conjunction with 3rd Eye Cameras - Must Select Camera Kit From 3rd Eye Camera Options		$ 2,359
Camera Systems			
All camera systems are mounted with protective camera brackets and twin tailgate flood lights.			
CAMERA MONITOR LOCATION WILL BE CAB ROOF MOUNTED			
Swivel monitor bracket will be provided for dual drive chassis			
3rd Eye® Camera Systems & 3rd® Eye Digital			
Note: Camera systems will accommodate a maximum of 6 cameras, not including driver and forward facing cameras included in 3rd Eye® Digital system			
☐	Base 3rd Eye® Single Camera System with **7"** Monitor and Single Camera Mounted on Tailgate		$ 2,148
☐	Upgraded base 3rd Eye® Single Camera System with **12"** Monitor and Single Camera Mounted on Tailgate		$ 3,148
☐	Add on 3rd Eye® Camera (LH Cab) - Camera System Price Adder (Only available if base camera is selected)		$ 572
☐	Add on 3rd Eye® Camera (RH Cab) - Camera System Price Adder (Only available if base camera is selected)		$ 572
☐	Add on 3rd Eye® Camera (LH Alley) - Camera System Price Adder (Only available if base camera is selected)		$ 572
☐	Add on 3rd Eye® Camera (RH Alley) - Camera System Price Adder (Only available if base camera is selected)		$ 572
☐	Add on 3rd Eye® Camera (Hopper) - Camera System Price Adder (Only available if base camera is selected)		$ 572
☐	3rd Eye® Digital System: Includes (Driver and Forward Facing Camera (Window Unit), and Gateway - (In-Cab Monitor Not Included) - *Digital monitoring service not included and must be purchased and activated though 3rd Eye post delivery *		$ 3,317
Load Cell Scale Systems			
☐	Heil Optimum Payload System (HOPS) using Air-Weigh Axle Scales		$ 9,275
☐	Air-Weigh™ Axle Scale System without Interlock		$ 8,652

Auxiliary Axles Options			
* NOTE: All axles MUST BE installed with tires so chassis can be re-certified to new GAWR and GVWR ratings			
Watson & Chalin™ Options			
☐	Watson & Chalin™ Self Steering Pusher Axle: 13,500 pound capacity, hub piloted or 20" spoke wheel hubs, automatic slack adjusters, type 16 air chambers, steering stabilizer kit and reverse lift kit -		$ 11,958
☐	Watson & Chalin™ Self Steering Tag Axle: 13,500 pound capacity, hub piloted or 20" spoke wheel hubs, automatic slack adjusters, type 16 air chambers, steering stabilizer kit and reverse lift kit, includes Tag Axle Spill Shield		$ 12,288
☐	Watson & Chalin™ Rigid Pusher Axle: 25,000 pound capacity, hub piloted or 20" spoke wheel hubs, 30/30 brake chambers, automatic slack adjusters, 1,300 cubic inch air tank and regulator kit		$ 15,017
☐	Watson & Chalin™ Rigid Tag Axle: 25,000 pound capacity, hub piloted or 20" spoke wheel hubs, 30/30 brake chambers, automatic slack adjusters, 1,300 cubic inch air tank and regulator kit, includes Tag Axle Spill Shield		$ 15,337
Hendrickson™ Options			
☐	Hendrickson™ Pusher Axle-13.500 pound capacity, Non-Steerable		$ 12,041
☐	Hendrickson™ Pusher Axle-13.500 pound capacity, Steerable		$ 12,360
☐	Hendrickson™ Tag Axle-13.500 pound capacity, Steerable, includes Tag Axle Spill Shield		$ 12,360
☐	Hendrickson™ Tag Axle-13.500 pound capacity, Non- Steerable, includes Tag Axle Spill Shield		$ 12,041
☐	Hendrickson™ Steerable Pusher Axle: 20,000 pound capacity		$ 15,229
☐	Hendrickson™ Steerable Tag Axle: 20,000 pound capacity, includes Tag Axle Spill Shield		$ 15,548
* Note: All auxiliary applications must be approved by Heil prior to order acceptance			
Auxiliary Axle Tire Options			
☐	255/70R-22.5 - Qty(2) load range H, 5,510 pound single max load at 120 psi with Steel Wheels		$ 2,379
☐	275/70R-22.5 - Qty(2) load range H, 7,000 pound single max load at 120 psi with Steel Wheels		$ 3,008
☐	Upgrade to Polished Aluminum Wheels (Set of Two)		$ 1,545
Body Options			
☐	Sliding Top Door - Aluminum - May not be compatible with roof mounted CNG system		$ 5,155
☐	Sliding Top door - Steel - May not be compatible with roof mounted CNG systems		$ 4,656
☐	Tailgate Mounted Roof Access Ladder Steel (Only one selection allowed) *Not available with CNrG Tailgate or 20yd body Option*		$ 1,427
☐	Curbside Mounted Roof Access Ladder (Only one selection allowed) *Not Available on 23yd body with Top Door*		$ 1,427
☐	Hopper Floor Liner (3/16" - AR400)		$ 1,906
☐	Hopper Floor Liner (1/4" - AR400)		$ 3,033
☐	Body Floor Liner (3/16" - AR400)		$ 2,163
☐	Packer Mounted Retainer Teeth		$ 773
☐	High Pressure Filter Monitor		$ 711
☐	Second 20 lb. Fire Extinguisher (Will be mounted to Curb side Hopper, if unable will be mounted under body)		$ 525
☐	Tool Box Bumper Mount - Steel 18"x18"x24"		$ 814
☐	Tool Box Bumper Mount - Aluminum 18"x18"x24"		$ 963
☐	Tool Box Bumper Mount - Poly - 18"x18"x24"		$ 731
☐	Extendable Broom Kit - Mounted Curbside of Body (Not Available on 20/23 Yd)		$ 438
☐	Extendable Broom Kit - Mounted Under Body		$ 438
☐	Cab Protector Extension Raise - Manual Jack -		$ 1,210
☐	Rear Caution Decal		$ 304
☐	Wheel Chock Kit - Dual (Mounted Under Body)		$ 170
☐	Wheel Chock Kit - Dual (Mounted on Curbside Body)		$ 170
☐	Cable Fall Protection Kit		$ 3,610
☐	D-Ring Fall Protection		$ 876
☐	Hydraulic Oil Tank Quick Disconnect Kit - For use with filter buggy		$ 865
☐	Service Loop Plumbing - Butterfly Style Quick Disconnects		$ 625
☐	Spill Kit included mounting brackets - (Mounted on Front Head)		$ 361
☐	Spill Kit (In Toolbox) *Requires additional purchase of a tool box*		$ 335
☐	Hydraulic Oil Tank Heater - 500 watts		$ 1,262
☐	Bolt On Fender Extension Kit - Keeps Body Clean of Road Spray		$ 773
☐	California Back Up Alarm		$ 716
☐	Infinity Series Packer/Eject Cylinders with scrapers and hardened rods to 50 HRC - Includes Five (5) Year Packer/Eject Cylinder Only Warranty that covers dents and dings (This Option is Required if purchasing extended warranty's below)		$ 3,245
☐	Standard Arm Cylinders for 8000# lift capacity - this option will reduce lift cycle time by 4s		$ 625
CNrG Tailgate Mounted CNG - Includes Installation Fee			
☐	60 DGE CNrG System		$ 42,889
☐	75 DGE CNrG System		$ 44,676
☐	90 DGE CNrG System		$ 50,784
CNrG Options			
☐	Front Bumper Fill with Kill Cap		$ 1,329
☐	Remote Fill, StreetSide Rear Fill Port		$ 2,318
☐	Remote Fill, Curbside Rear Fill Port		$ 2,318
☐	Defuel Transfer Hose - 35 ft.		$ 2,034
CNG Installation - Top of Body Installation			
☐	CNG Installation Charge - Includes brackets, temporary tank rental, hardware, and mounting of CNG system		$ 5,969

Extended Complete Body Warranty Options			
☐	Two (2) Year (Months 13-24) (Maximum 4,000 hrs. of Operation) Complete Heil Body Warranty Requires additional purchase of Infinity packer/eject cylinders from above		$ 4,671
☐	Three (3) Year (Months 13-36) (Maximum 6,000 hrs. of Operation) Complete Heil Body Warranty Requires additional purchase of Infinity packer/eject cylinders from above		$ 8,013
☐	Four (4) Year (Months 13-48) (Maximum 8,000 hrs. of Operation) Complete Heil Body Warranty Requires additional purchase of Infinity packer/eject cylinders from above		$ 11,284
☐	Five (5) Year (Months 13-60) (Maximum 10,000 hrs. of Operation) Complete Heil Body Warranty Requires additional purchase of Infinity packer/eject cylinders from above		$ 15,126
Extended Cylinder Warranty Options			
☐	Two (2) Year (Months 13-24) (Maximum 4,000 hrs. of Operation) All other Non-Infinity Cylinder Warranty - Requires additional purchase of Infinity packer/eject cylinders from above		$ 1,030
☐	Three (3) Year (Months 13-36) (Maximum 6,000 hrs. of Operation) All other Non-Infinity Cylinder Warranty - Requires additional purchase of Infinity packer/eject cylinders from above		$ 2,065
☐	Four (4) Year (Months 13-48) (Maximum 8,000 hrs. of Operation) All other Non-Infinity Cylinder Warranty - Requires additional purchase of Infinity packer/eject cylinders from above		$ 3,095
☐	Five (5) Year (Months 13-60) (Maximum 10,000 hrs. of Operation) All other Non-Infinity Cylinder Warranty - Requires additional purchase of Infinity packer/eject cylinders from above		$ 3,605
Extended Hydraulic Pump and Valve Warranty Options			
☐	Two (2) Year (Months 13-24) (Maximum 4,000 hours of operation) Hydraulic Pump and Valve warranty *Not needed if purchasing extended complete body warranty*		$ 1,246
☐	Three (3) Year (Months 13-36) (Maximum 6,000 hours of operation) Hydraulic Pump and Valve warranty *Not needed if purchasing extended complete body warranty*		$ 2,421
☐	Four (4) Year (Months 13-48) (Maximum 8,000 hours of operation) Hydraulic Pump and Valve warranty *Not needed if purchasing extended complete body warranty*		$ 3,600
☐	Five (5) Year (Months 13-60) (Maximum 10,000 hours of operation) Hydraulic Pump and Valve warranty *Not needed if purchasing extended complete body warranty*		$ 6,232
Paint Options			
NOTE: LIST PAINT CODES ON PAINT DIAGRAM			
☐	Customized Paint Color - Paint Color Code NOT included in the Color Smart Brochure		$ 417
☑	Two Tone Paint		$ 1,576
☐	Paint Striping - first stripe		$ 1,329
☐	Paint Striping - each additional stripe		$ 742
☐	Metallic Paint		$ 7,210
☐	Clear coat Finish		$ 1,844
☐	Anti-Graffiti Clear coat Finish		$ 2,652
☐	Prime Paint Only - deduct		$ (1,220)
TOTALS			
	Total from Options Above (MSRP)		$ 1,576
	Additional Options (Custom's, Chassis Mods, Etc.) Total		
	Subtotal		$ 1,576
	Dealer Discount (%)	0%	$ -
	Dealer Net Price		$ 1,576
	Surcharge if Applicable		$ -
	Additional Discount (SPR)		
	Freight		
	Total Price per Unit		$ 1,576

Return to Index Page

Half/Pack® LowRider™

With Residential Odyssey ™ Controls

Paint Stripe and Accessory Requirements

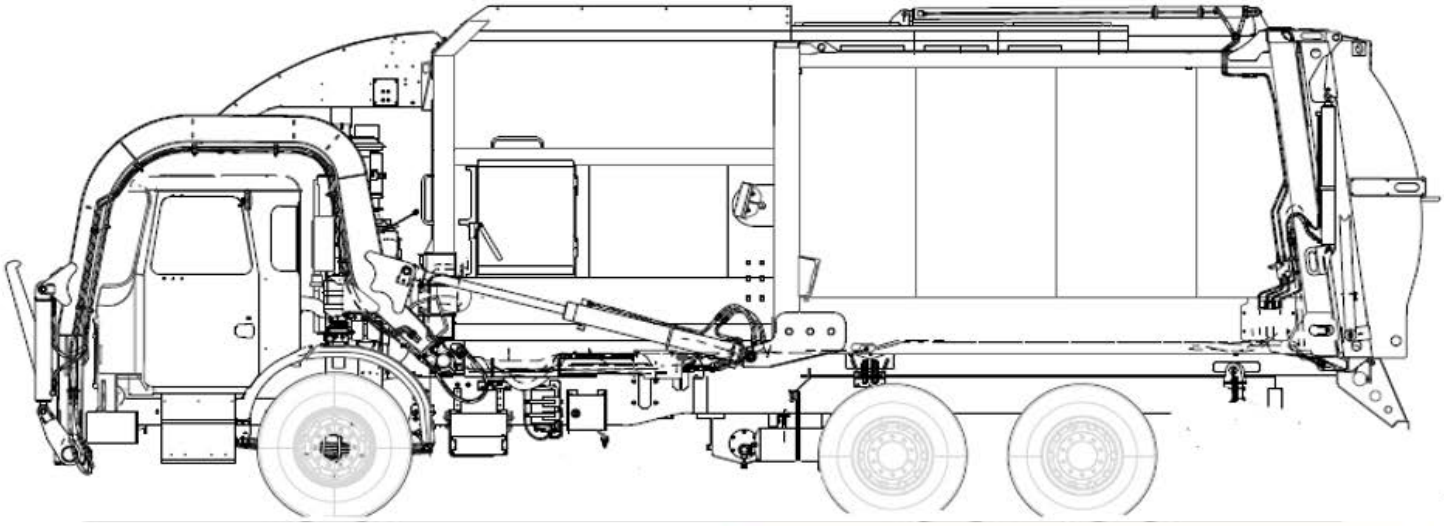

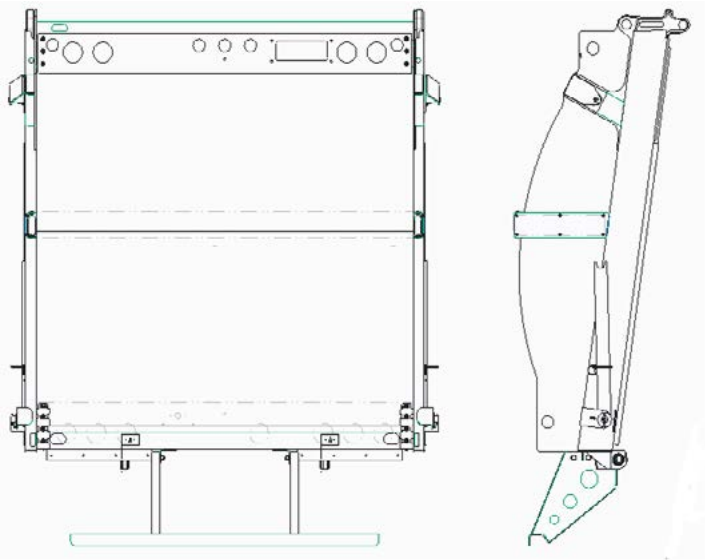

PAINT AND OPTIONS LAYOUT DETAIL
USE THIS FORM TO DESCRIBE PAINT SCHEMES
BE SPECIFIC ABOUT DIMENSIONS AND DETAILS

Sales Order #		Submitted by	
Customer			
Paint Color and Code 1			
Paint Color and Code 2			
Paint Color and Code 3			
Chassis Make			
Chassis Model			
Wheelbase			
Body Size		Approved by	

PT 1000™

High-Performance Rear Loader

Standard Equipment Features included in Base Price

- 3.0 yd3 hopper
- Smooth side body construction
- Bolt-on ANSI Compliant rear riding steps
- Tailgate service props
- Remote mount cast iron roller bearing gear pump (less PTO)
- Chrome-plated ejector cylinder sleeves
- Quick-change UHMW ejector slides
- Wide track easy-change carrier slides
- Underbody mounted oil tank
- Level / temperature / sight gauge for hydraulic oil tank
- Oil suction shut-off valve
- 3-micron return line filter with magnetic trap and in-cab filter bypass monitor
- 100-micron suction line strainer
- Regenerative valve for fast packer and reload times
- Neutral safety switch for automatic transmissions only
- Right side buzzer controls
- Abrasion Resistant Hoses
- Right side packer controls
- Backup alarm
- Backup and license plate light
- LED Center-mounted brake light
- LED Duplicate high and low mount stop, turn, and tail lights
- LED Mid-body turn signals
- Hinged left side body access door with step and grab handle
- LED FMVSS #108 clearance lights and reflectors
- ICC reflective tape
- Rear camera bracket and flood lights - reverse activated
- Body undercoating
- Customer’s choice of one color finish paint from Color Smart brochure
- Standard 1-year (2,000 hours of operation) warranty
- ANSI Z 245.1-2017 compliant
- Cavity coat and joint sealer
- Chrome ejector cylinder
- 5 lb. In-cab Fire Extinguisher
- Safety Triangle

Return to Index Page

2020 PT 1000™ High-Performance Rear Loader - Sales Order Form

Base Units PT 1000™ High-Performance Rear Loader * EJECT ONLY *			
☐	13 cubic yard		$ 55,529
☐	16 cubic yard		$ 57,364
☐	18 cubic yard		$ 58,902
☐	20 cubic yard		$ 60,716
☐	25 cubic yard		$ 64,134
Hopper Size			3.0 yd³
CHASSIS MUST COMFORM WITH HEIL'S MOST CURRENT CHASSIS SPECIFICATIONS FOUND AT WWW.HEIL.COM			
Mounting Options			
☐	Full Factory Mount		$ 3,044
☐	Semi-Mount - consists of frame cut-off, permanent mounting brackets and light electrical wiring only		$ 1,519
☐	Strap Mount - chassis must be suitable for temporary mount when received - Heil will connect lights and provide temporary mounting brackets		$ 870
☐	Mount at Dealer Destination		$ 783
Power Take Off / Pump Options			
☐	Remote Mount Gear Pump		STD
☐	Direct Mount Gear Pump *Requires Custom approval for any chassis with a 3000 Series Allison Transmission*		$ 767
☐	Direct Mount Vane Pump		$ 1,277
☐	Front Mount Vane Pump		$ 4,687
☐	Operate at Idle (OAI) Front Mount Vane Pump		$ 7,328
☐	Clutch Shift PTO		$ 3,130
☐	Clutch Shift - Extended Shaft PTO with Gear Pump		$ 3,966
☐	Constant Drive - Extended Shaft PTO with Gear Pump		$ 3,966
Certain transmission / chassis configurations may not have proper clearance to allow direct mount or live power systems driven off of the transmission			
Lighting and Electrical Accessories			
☐	Hopper Work Light Kit - switch on tailgate		$ 376
☐	Hopper Work Light Kit - switch in cab		$ 376
☐	Dual Hopper Work Light Kit - two lights - switch on tailgate		$ 500
☐	Dual Hopper Work Light Kit - two lights - switch in cab		$ 500
☐	Dual Work Lights Outside of Hopper		$ 500
☐	Body Side Backing Assist Lights - reverse activated		$ 536
☐	Multi-Function LED Strobe / Turn Lamps - includes LED light package for entire unit		$ 649
☐	Municipal Lights with Dual 7" Amber LEDs & Overhead Flood Light		$ 1,200
☐	Strobe Light, Amber - upper LH corner of tailgate - in-cab switch		$ 711
☐	Dual Strobe Lights, Amber - upper LH & RH on tailgate - in-cab switch		$ 1,030
☐	Strobe Light, Amber - mounted left- center, front of body - in-cab switch		$ 711
☐	Dual Front LED Oval Strobe Lights, Amber - in-cab switch		$ 819
☐	Dual Rear LED Oval Strobe Lights, Amber - in-cab switch		$ 819
☐	Left Hand Buzzer Kit		$ 180
☐	Whelen Strobe Lights Kit		$ 3,750
When equipped with dual cart tippers, only upper Multifunction lamps will be provided			
Container Handling / Cart Tipper Options			
☐	12,000 Pound Line Pull Drum Winch with Control Kit *Not available on 13yd Unit*		$ 6,190
☐	15,000 Pound Line Pull Reeving Cylinder with Control Kit * Not available on 13yd Unit*		$ 6,875
☐	Reeving Cylinder Bracket Only * Not available on 13yd Unit*		$ 572
☐	Adjustable Roll Bar with Control Kit		$ 4,372
All of the above mechanisms require the latch kit below			
☐	Lip and Latch Kit - to suit application without cart tipper(s)		$ 1,633
☐	Lip and Latch Kit - to suit application with cart tipper(s)		$ 1,741
	☐ Single Tipper Center Mounted ☐ Single Tipper Offset to Curbside ☐ Dual Tipper		
☐	Single Control Valve Section with Control Handle		$ 1,406
☐	Double Control Valve Section with Control Handles		$ 2,158
☐	Single Cart Tipper Control Valve, Handle, Plumbing and Hose Kit		$ 2,106
☐	Dual Cart Tipper Control Valve, Handle, Plumbing and Hose Kit		$ 3,425
☐	Bayne Cart Tipper - Specify Model - Includes Controls, Valves, Plumbing, and Installation		See Bayne
☐	Customer Installed Single Cart Tipper Kit - Bayne Bracket, Control Valve, Handle, Plumbing and Hose Kit		$ 2,467
☐	Customer Installed Double Cart Tipper Kit - Bayne Bracket, Control Valve, Handle, Plumbing and Hose Kit		$ 3,780
Body Options			
☐	Hopper Floor Kit (1/4" - 150,000 psi in lieu of 3/16" 150,000 psi)		$ 968
☐	Hopper Floor Overlay Kit (3/16" - 150,000 psi)		$ 1,463
☐	Heavy Duty Hopper Overlay Package 3/16" Hopper Bottom and Side liners		$ 2,467
☐	Heavy Duty Tailgate Raise Cylinders (Maybe Required Depending Upon Tailgate Optional Content Ordered)		$ 1,406
☐	1/4" Body Floor Kit		$ 2,549
☐	Body Front Head Closure Kit		$ 400
☐	Hydraulic Pressure Gauge Kit (shipped loose in cab)		$ 324
☐	High Pressure Filter Kit		$ 963
☐	60 Gallon Washout Tank - side mounted		$ 2,153
☐	20 lb. Fire Extinguisher with Bracket		$ 525
☐	Dual 20lb. Fire Extinguisher with Bracket		$ 1,056
☐	Tool Box (18" x 18" x 36") - frame mounted		$ 860
☐	Tool Box (18" x 18" x 24") - frame mounted		$ 814
☐	Broom and Shovel Rack - mounted on tailgate		$ 232
☐	Fender Extension Kit		$ 770
☐	Mud Flaps - anti-sail / anti-splash - mounted ahead of rear tires		$ 242
☐	Mud Flaps - anti-sail / anti-splash - tailgate mounted behind rear tires		$ 330
☐	Mud Guards - steel - mounted ahead of rear tires		$ 350
☐	5 Gallon Cooler and Bracket - frame mounted		$ 376
☐	Side Door Interlock Kit - shuts down pump when open (Requires Clutch Shift PTO)		$ 556
☐	Return Line Check Valve Kit		$ 536
☐	Spill Kit - In Cab		$ 361
☐	Spill Kit - Front of Body		$ 474
☐	Extended Tailgate Seal		$ 330
☐	Automatic Hydraulic Tailgate Locks		$ 4,053
☐	Anti-Back Pack Valve Kit		$ 1,009
☐	California Back Up Alarm		$ 711
☐	Hydraulic Oil Tank Quick Disconnect Kit - For use with filter buggy		$ 865
☐	500 watt in-tank oil heater		$ 1,262
☐	PTO Hour Meter		$ 200

Return to Index Page

2020 PT 1000™ High-Performance Rear Loader - Sales Order Form			
Organics Package Options			
☐	Extended Tailgate Seal - Same as above		$ 330
☐	Side door kit with seal		$ 1,159
☐	Front head splash cover kit		$ 541
☐	Lip extension kit		$ 860
☐	Automatic Hydraulic Tailgate Locks - same as above		$ 4,053
☐	Front head oil tank kit (Not allowed with Front of Body CNG)		$ 1,602
☐	Hopper side drain kit		$ 340
☐	Tailgate side seal		$ 633
☐	Top of body seal		$ 283
Camera Systems			
All camera systems are mounted with protective camera brackets and twin tailgate flood lights			
CAMERA MONITOR LOCATION WILL BE CAB ROOF MOUNTED			
Swivel monitor bracket will be provided for dual drive chassis			
3rd Eye® Camera Systems & 3rd® Eye Digital			
Note: Camera systems will accommodate a maximum of 6 cameras, not including driver and forward facing cameras included in 3rd Eye™ Digital system			
☐	Base 3rd Eye® Single Camera System with 7" STD. monitor and Single Camera Mounted on Tailgate		$ 2,148
☐	Add on 3rd Eye® Camera (LH Cab) - Camera System Price Adder **(Only available if base camera is selected)**		$ 572
☐	Add on 3rd Eye® Camera (RH Cab) - Camera System Price Adder **(Only available if base camera is selected)**		$ 572
☐	Add on 3rd Eye® Camera (LH Alley) - Camera System Price Adder **(Only available if base camera is selected)**		$ 572
☐	Add on 3rd Eye® Camera (RH Alley) - Camera System Price Adder **(Only available if base camera is selected)**		$ 572
☐	3rd Eye® Digital System: Includes (Driver and Forward Facing Camera (Window Unit), and Gateway - (In-Cab Monitor Not Included) - *Digital monitoring service not included and must be purchased and activated though 3rd Eye post delivery *		$ 3,317
AWTI ™ Radar Systems			
☐	AWTI™ Radar System used in conjunction with 3rd Eye Cameras - Must Select Camera from 3rd Eye Camera System Options		$ 2,359
Load Cell Scale Systems			
☐	Heil Optimum Payload System (HOPS) using Air-Weigh Axle Scales		$ 9,275
☐	Air-Weigh™ Axle Scale System without Interlock		$ 8,652
Auxiliary Axle Options			
* NOTE: All axles MUST BE installed with tires so chassis can be re-certified to new GAWR and GVWR ratings			
Watson & Chalin™ Options			
☐	Watson & Chalin™ Rigid Pusher Axle: 25,000 pound capacity, hub piloted or 20" spoke wheel hubs, 30/30 brake chambers, automatic slack adjusters, 1,300 cubic inch air tank and regulator kit		$ 15,017
Hendrickson™ Options			
☐	Hendrickson™ Steerable Pusher Axle: 20,000 pound capacity		$ 15,229
Auxiliary Axles Tire Options			
☐	255/70R-22.5 - load range H, 5,510 pound single max load at 120 psi with rim - 2 tires installed		$ 2,379
☐	275/70R-22.5 - load range H, 7,000 pound single max load at 120 psi with rim - 2 tires installed		$ 3,008
☐	Upgrade to Polished Aluminum Wheels (Set of Two)		$ 1,545
* Note: All auxiliary applications must be approved by Heil prior to order acceptance			
CNG Installation -			
☐	Top Of Body -CNG Installation Charge - Includes brackets, hardware, and mounting of approved CNG system		$ 5,969
☐	Front Of Body -CNG Installation Charge - Includes brackets, hardware, and mounting of approved CNG system		$ 5,969
Extended Complete Body Warranty Options			
☐	Two (2) Year (Months 13-24) (Maximum 4,000 hrs. of Operation) Complete Heil Body Warranty		$ 2,704
☐	Three (3) Year (Months 13-36) (Maximum 6,000 hrs. of Operation) Complete Heil Body Warranty		$ 5,402
☐	Four (4) Year (Months 13-48) (Maximum 8,000 hrs. of Operation) Complete Heil Body Warranty		$ 8,004
☐	Five (5) Year (Months 13-60) (Maximum 10,000 hrs. of Operation) Complete Heil Body Warranty		$ 10,707
Extended Cylinder Warranty Options			
☐	Two (2) Year (Months 13-24) (Maximum 4,000 hrs. of Operation) All Cylinder Warranty -		$ 1,030
☐	Three (3) Year (Months 13-36) (Maximum 6,000 hrs. of Operation) All Cylinder Warranty -		$ 1,833
☐	Four (4) Year (Months 13-48) (Maximum 8,000 hrs. of Operation) All Cylinder Warranty -		$ 2,754
☐	Five (5) Year) (Months 13-60) (Maximum 10,000 hrs. of Operation) All Cylinder Warranty-		$ 3,533
Extended Hydraulic Pump and Valve Warranty Options			
☐	Two (2) Year (Months 13-24) (Maximum 4,000 hours of operation) Hydraulic Pump and Valve warranty *Not needed if purchasing extended complete body warranty*		$ 1,030
☐	Three (3) Year (Months 13-36) (Maximum 6,000 hours of operation) Hydraulic Pump and Valve warranty *Not needed if purchasing extended complete body warranty*		$ 1,833
☐	Four (4) Year (Months 13-48) (Maximum 8,000 hours of operation) Hydraulic Pump and Valve warranty *Not needed if purchasing extended complete body warranty*		$ 2,755
☐	Five (5) Year (Months 13-60) (Maximum 10,000 hours of operation) Hydraulic Pump and Valve warranty *Not needed if purchasing extended complete body warranty*		$ 3,533
Paint Options			
NOTE: LIST PAINT CODES ON PAINT DIAGRAM			
☐	Customized Paint Color - Paint Color Code NOT included in the Color Smart Brochure		$ 417
☐	Two Tone Paint		$ 1,581
☐	Paint Striping - first stripe		$ 1,329
☐	Paint Striping - each additional stripe		$ 742
☐	Metallic Paint		$ 7,210
☐	Clear coat Finish		$ 1,844
☐	Anti-Graffiti Clear coat Finish		$ 2,647
☐	Prime Paint Only - deduct		$ (970)
TOTALS			
	Total from Options Above (MSRP)		**$ -**
	Additional Options (Custom's, Chassis Mods, Etc.) Total		
	Subtotal		**$ -**
	Dealer Discount (%)	**0%**	**$ -**
	Dealer Net Price		**$ -**
	Surcharge if Applicable		
	Additional Discount (SPR)		
	Freight		
	Total Price per Unit		**$ -**

PT 1000™

High-Performance Rear Loader

Paint Stripe and Accessory Requirements

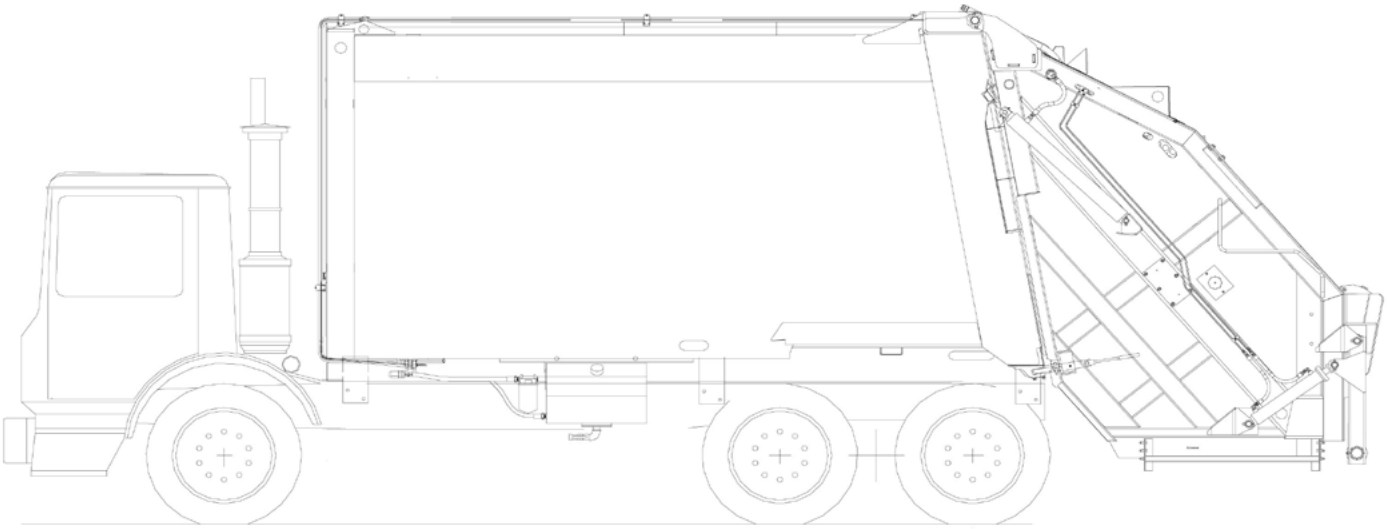

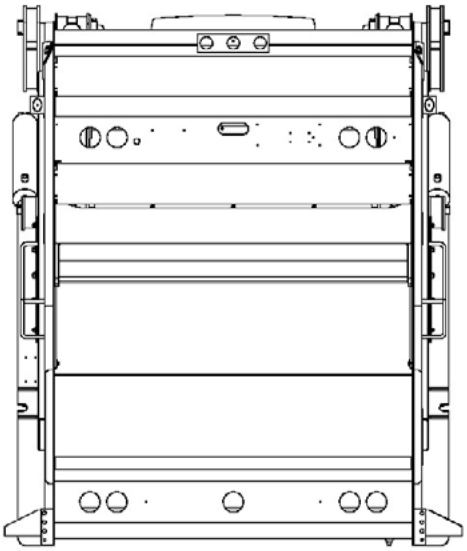

Paint and options layout detail
Use this form to describe paint schemes
Be specific about dimensions and details

Sales Order #		Submitted by	
Customer			
Paint Color 1			
Paint Color 2			
Paint Color 3			
Chassis Make			
Chassis Model			
Wheelbase			
Body Size		Approved by	

DuraPack® 5000

High-Compaction Rear Loader

Standard Equipment Features included in Base Price

- 3.94 yd3 hopper
- Smooth body side construction
- Extra-duty 80,000 psi body
- Bolt-on ANSI compliant rear riding steps
- Tailgate service props
- Remote mount cast iron roller bearing gear pump (less PTO)
- Chrome-plated cylinder rods
- Chrome-plated ejector cylinder sleeves
- Underbody mounted oil tank
- Level/temperature/sight gauge for hydraulic oil tank
- Oil suction shut-off valve
- 3-micron return line filter with magnetic trap and in-cab filter bypass monitor
- 100-micron suction line strainer
- Regenerative valve for fast packer and reload times
- Neutral safety switch for automatic transmissions only
- Abrasion resistant hydraulic hoses
- Body side access door with step and grab handle
- Right side buzzer controls
- Right side packer controls
- Backup alarm
- Backup and license plate light
- LED Center-mounted brake light
- LED Duplicate high and low mount stop, turn, and tail lights
- LED Mid-body turn signals
- LED FMVSS #108 clearance lights and reflectors
- ICC reflective tape
- Rear camera bracket and flood lights - reverse activated
- Body undercoating
- Customer’s choice of one color finish paint from Color Smart brochure
- Standard 1-year (2,000 hours of operation) warranty
- ANSI Z 245.1-2017 compliant
- Cavity coat and joint sealer
- 5 lb. In-cab Fire Extinguisher
- Safety Triangle

Return to Index Page

2020 DuraPack® 5000 High-Compaction Rear Loader - Sales Order Form		
Base Units DuraPack® 5000 High-Compaction Rear Loader - EJECT ONLY		
	18 cubic yard - Custom and Weight Distribution Required Prior To Order	
	20 cubic yard - Custom and Weight Distribution Required Prior To Order	
☐	25 cubic yard	$ 72,473
☐	27 cubic yard	$ 74,149
☐	32 cubic yard	$ 77,295
Hopper Size		3.94 yd³
CHASSIS MUST COMFORM WITH HEIL'S MOST CURRENT CHASSIS SPECIFICATIONS FOUND AT WWW.HEIL.COM		
Mounting Options		
☐	Full Factory Mount for Eject Models	$ 3,044
☐	Semi-Mount - consists of frame cut-off, permanent mounting brackets and light electrical wiring only	$ 1,519
☐	Strap Mount - chassis must be suitable for temporary mount when received - Heil will connect lights and provide temporary mounting brackets	$ 870
☐	Mount at Dealer Destination	$ 783
Power Take Off / Pump Options		
☐	Remote Mount Gear Pump	STD
☐	Remote Mount Vane Pump - Fast Cycle - (Fast Cycle Pumps gives 16-18 sec Cycle Times)	$ 572
☐	Direct Mount Gear Pump - Requires Custom approval for any 3000 Series Allison Transmission Equipped Chassis'	$ 767
☐	Direct Mount Vane Pump	$ 1,277
☐	Front Mount Vane Pump	$ 4,687
☐	Front Mount Vane Pump - Fast Cycle - (Fast Cycle Pumps gives 16-18 sec Cycle Times)	$ 5,263
☐	Operate at Idle (OAI) Front Mount Vane Pump	$ 7,328
☐	Clutch Shift PTO	$ 3,130
☐	Clutch Shift - Extended Shaft PTO with Gear Pump	$ 3,966
☐	Constant Drive - Extended Shaft PTO with Gear Pump	$ 3,966
Certain transmission / chassis configurations may not have proper clearance to allow direct mount or live power systems driven off of the transmission		
Lighting and Electrical Accessories		
☐	Hopper Work Light Kit - switch on tailgate	$ 376
☐	Hopper Work Light Kit - switch in-cab	$ 376
☐	Dual Hopper Work Light Kit - two lights - switch on tailgate	$ 500
☐	Dual Hopper Work Light Kit - two lights - switch in cab	$ 500
☐	Dual Work Lights Outside of Hopper	$ 500
☐	Body Side Backing Assist Lights - reverse activated	$ 536
☐	LED Body Side Backing Assist Lights - reverse activated	$ 819
☐	Multi-Function LED Strobe / Turn Lamps - includes LED light package for entire unit	$ 649
☐	Municipal Lights with Dual 7" Amber LEDs & Overhead Flood Light	$ 1,530
☐	Strobe Light, Amber - upper LH corner of tailgate - in-cab switch	$ 711
☐	Dual Strobe Lights, Amber - upper LH & RH on tailgate - in-cab switch	$ 1,030
☐	Strobe Light, Amber - mounted right-center, front of body - in-cab switch	$ 711
☐	Dual Front LED Oval Strobe Lights, Amber - in-cab switch	$ 819
☐	Dual Rear LED Oval Strobe Lights, Amber - in-cab switch	$ 819
☐	Dual Rear LED Oval Strobe Lights, Amber - pump activated	$ 819
☐	Strobe Light bracket on upper tailgate	$ 216
☐	Left Hand Buzzer Kit	$ 180
☐	Whelen Strobe Lights Kit	$ 3,750
Container Handling / Cart Tipper Options		
☐	12,000 Pound Line Pull Drum Winch with Control Kit	$ 6,190
☐	15,000 Pound Line Pull Reeving Cylinder with Control Kit	$ 6,875
☐	15,000 Pound Line Pull Recessed Reeving Cylinder with Control Kit	$ 8,611
☐	Recessed Reeving kits are not applicable on units less than 25 yard	
☐	Adjustable Roll Bar with Control Kit	$ 4,372
☐	Arm Mechanism with Control Kit	$ 6,195
☐	Bolt-on Reeving Cylinder Bracket Only	$ 572
All of the above mechanisms require the latch kit listed below, except for Arm Mechanism		
Riding steps cannot be supplied with Arm Mechanism option		
☐	Lip and Latch Kit - with short sill extension - to suit application without cart tipper(s) - Can't be used with Roll Bar	$ 1,360
☐	Lip and Latch Kit - with 20°, 7 inch sill extension with cutouts for cart tippers	$ 1,741
	☐ **Single Tipper Center Mounted** ☐ **Single Tipper Offset to Curbside** ☐ **Dual Tipper**	
☐	Lip and Latch Kit - with 20°, 7 inch sill extension - to suit application without cart tipper(s)	$ 1,633
Suitable for aftermarket install of cart tippers		
☐	Single Control Valve Section with Control Handle	$ 1,406
☐	Double Control Valve Section with Control Handles	$ 2,158
☐	Triple Control Valve Section with Control Handles	$ 3,425
☐	Single Cart Tipper Control Valve, Handle, Plumbing and Hose Kit	$ 2,106
☐	Dual Cart Tipper Control Valve, Handle, Plumbing and Hose Kit	$ 3,425
☐	Bayne Cart Tipper - Specify Model - Includes Controls, Valves, Plumbing, and Installation	
☐	Customer Installed Single Cart Tipper Kit - Bayne Bracket, Control Valve, Handle, Plumbing and Hose Kit	$ 2,467
☐	Customer Installed Double Cart Tipper Kit - Bayne Bracket, Control Valve, Handle, Plumbing and Hose Kit	$ 3,780
Body Options		
☐	Hopper Floor Kit (1/4" - 150,000 psi in lieu of standard 3/16" 150,000 psi)	$ 968
☐	Hopper Floor Overlay Kit (3/16" - 150,000 psi)	$ 1,463
☐	DP 5000 H.D. Contractors Package (includes 1/4" hopper floor, 3/16" hopper front face liner and tailgate spill troughs)	$ 1,602
☐	4" Hopper Lip Extension *Not available with any Container Handling/Cart Tipper options*	$ 927
☐	Hopper Lip Reinforcement Kit	$ 536
☐	Tailgate Side Spill Troughs	$ 762
☐	Automatic Hydraulic Tailgate Locks	$ 4,053
☐	Extended Tailgate Seal Kit	$ 330
☐	Body Front Head Closure Kit	$ 814
☐	Body Front Head Splash Guard (Extends the front head an extra 11.5")	$ 350
☐	Side Door Interlock Kit - shuts down pump when open (Requires Clutch Shift PTO)	$ 556
☐	Hydraulic Pressure Gauge Kit (shipped loose in cab)	$ 324
☐	High Pressure Filter Kit	$ 963
☐	Hydraulic Oil Tank Heater - 500 watt	$ 1,262
☐	Hydraulic Tank Low Oil Level Warning Kit	$ 1,154
☐	In-Body Oil Tank	$ 1,308
☐	60 Gallon Wash-Out Tank	$ 2,153
☐	20 lb. Fire Extinguisher with Bracket	$ 525
☐	Dual 20 lb. Fire Extinguisher with Bracket	$ 1,056
☐	Tool Box (18" x 18" x 36") - frame mounted	$ 860
☐	Tool Box (18" x 18" x 24") - frame mounted	$ 814
☐	Broom and Shovel Rack - mounted on tailgate	$ 232
☐	Dual Broom and Shovel Rack - mounted on both sides of tailgate	$ 448
☐	Mud Flaps - anti-sail / anti-splash - mounted ahead of rear tires	$ 242
☐	Mud Flaps - anti-sail / anti-splash - tailgate mounted behind rear tires	$ 330
☐	Mud Guards - steel - mounted ahead of rear tires	$ 350
☐	5 Gallon Cooler and Bracket - frame mounted	$ 376
☐	Return Line Check Valve Kit	$ 536
☐	Upper Panel Cover Kit	$ 453
☐	1/4" Body Floor Kit	$ 2,549
☐	Roof Tube Cover Kit	$ 1,107
☐	Fender Extension Kit	$ 773
☐	Roadway Sign Frames	$ 2,148
☐	Spill Kit - In Cab	$ 361
☐	Spill Kit - Front of Body	$ 474
☐	Hydraulic Oil Tank Quick Disconnect Kit - For use with filter buggy	$ 865
☐	Anti-Back Pack Valve Kit	$ 1,009
☐	PTO Hour Meter *available only if PTO is selected*	$ 200

2020 DuraPack® 5000 High-Compaction Rear Loader - Sales Order Form

Camera Systems - All camera systems are mounted with protective camera brackets and twin tailgate flood lights			
CAMERA MONITOR LOCATION WILL BE CAB ROOF MOUNTED - Swivel monitor bracket will be provided for dual drive chassis			
3rd Eye® Camera Systems & 3rd® Eye Digital			
Note: Camera systems will accommodate a maximum of 6 cameras, not including driver and forward facing cameras included in 3rd Eye® Digital system			
☐	Base 3rd Eye® Single Camera System with 7" STD. monitor and Single Camera Mounted on Tailgate		$ 2,148
☐	Add on 3rd Eye® Camera (LH Cab) - Camera System Price Adder **(Only available if base camera is selected)**		$ 572
☐	Add on 3rd Eye® Camera (RH Cab) - Camera System Price Adder **(Only available if base camera is selected)**		$ 572
☐	Add on 3rd Eye® Camera (LH Alley) - Camera System Price Adder **(Only available if base camera is selected)**		$ 572
☐	Add on 3rd Eye® Camera (RH Alley) - Camera System Price Adder **(Only available if base camera is selected)**		$ 572
☐	3rd Eye® Digital System: Includes (Driver and Forward Facing Camera (Window Unit), and Gateway - (In-Cab Monitor Not Included) - *Digital monitoring service not included and must be purchased and activated though 3rd Eye post delivery *		$ 3,317
AWTI ™ Radar Systems			
☐	AWTI™ Radar System used in conjunction with 3rd Eye Cameras - Must Select Camera from above 3rd Eye Camera Options		$ 2,359
Load Cell Scale Systems			
☐	Heil Optimum Payload System (HOPS) using Air-Weigh Axle Scales		$ 9,275
☐	Air-Weigh™ Axle Scale System without Interlock		$ 8,652
Auxiliary Axles Options * Note: All auxiliary applications must be approved by Heil prior to order acceptance			
* NOTE: All axles MUST BE installed with tires so chassis can be re-certified to new GAWR and GVWR ratings			
Watson & Chalin™ Options			
☐	Watson & Chalin™ Rigid Pusher Axle: 25,000 pound capacity, hub piloted or 20" spoke wheel hubs, 30/30 brake chambers, automatic slack adjusters, 1,300 cubic inch air tank and regulator kit		$ 15,017
Hendrickson™ Options			
☐	Hendrickson™ Steerable Pusher Axle: 20,000 pound capacity		$ 15,229
Auxiliary Axle Tire Options			
☐	255/70R-22.5 - load range H, 5,510 pound single max load at 120 psi with rim - 2 tires installed		$ 2,379
☐	275/70R-22.5 - load range H, 7,000 pound single max load at 120 psi with rim - 2 tires installed		$ 3,008
☐	Upgrade to Polished Aluminum Wheels (Set of Two)		$ 1,545
CNG Installation -			
☐	Top Of Body -CNG Installation Charge - Includes brackets, hardware, and mounting of approved CNG system		$ 5,969
☐	Front Of Body -CNG Installation Charge - Includes brackets, hardware, and mounting of approved CNG system		$ 5,969
Extended Complete Body Warranty Options			
☐	Two (2) Year (Months 13-24) (Maximum 4,000 hrs. of Operation) Complete Heil Body Warranty		$ 2,704
☐	Three (3) Year (Months 13-36) (Maximum 6,000 hrs. of Operation) Complete Heil Body Warranty		$ 5,402
☐	Four (4) Year (Months 13-48) (Maximum 8,000 hrs. of Operation) Complete Heil Body Warranty		$ 8,044
☐	Five (5) Year (Months 13-60) (Maximum 10,000 hrs. of Operation) Complete Heil Body Warranty		$ 10,707
Extended Cylinder Warranty Options			
☐	Two (2) Year (Months 13-24) (Maximum 4,000 hrs. of Operation) All Cylinder Warranty -		$ 1,030
☐	Three (3) Year (Months 13-36) (Maximum 6,000 hrs. of Operation) All Cylinder Warranty -		$ 1,833
☐	Four (4) Year (Months 13-48) (Maximum 8,000 hrs. of Operation) All Cylinder Warranty -		$ 2,755
☐	Five (5) Year) (Months 13-60) (Maximum 10,000 hrs. of Operation) All Cylinder Warranty-		$ 3,533
Extended Hydraulic Pump and Valve Warranty Options			
☐	Two (2) Year (Months 13-24) (Maximum 4,000 hours of operation) Hydraulic Pump and Valve warranty *Not needed if purchasing extended complete body warranty*		$ 1,030
☐	Three (3) Year (Months 13-36) (Maximum 6,000 hours of operation) Hydraulic Pump and Valve warranty *Not needed if purchasing extended complete body warranty*		$ 1,833
☐	Four (4) Year (Months 13-48) (Maximum 8,000 hours of operation) Hydraulic Pump and Valve warranty *Not needed if purchasing extended complete body warranty*		$ 2,755
☐	Five (5) Year (Months 13-60) (Maximum 10,000 hours of operation) Hydraulic Pump and Valve warranty *Not needed if purchasing extended complete body warranty*		$ 3,533
Paint Options			
NOTE: LIST PAINT CODES ON PAINT DIAGRAM			
☐	Customized Paint Color - Paint Color Code NOT included in the Color Smart Brochure		$ 417
☐	Two Tone Paint		$ 1,581
☐	Paint Striping - first stripe		$ 1,329
☐	Paint Striping - each additional stripe		$ 742
☐	Metallic Paint		$ 7,210
☐	Clear coat Finish		$ 1,844
☐	Anti-Graffiti Clear coat Finish		$ 2,647
☐	Prime Paint Only - deduct		$ (970)
TOTALS			
	Total from Options Above (MSRP)		**$ -**
	Additional Options (Custom's, Chassis Mods, Etc.) Total		
	Subtotal		**$ -**
	Dealer Discount (%)	**0%**	**$ -**
	Dealer Net Price		**$ -**
	Surcharge if Applicable		**$ -**
	Additional Discount (SPR)		
	Freight		
	Total Price per Unit		**$ -**

Return to Index Page

DuraPack® 5000

High-Compaction Rear Loader

Paint Stripe and Accessory Requirements

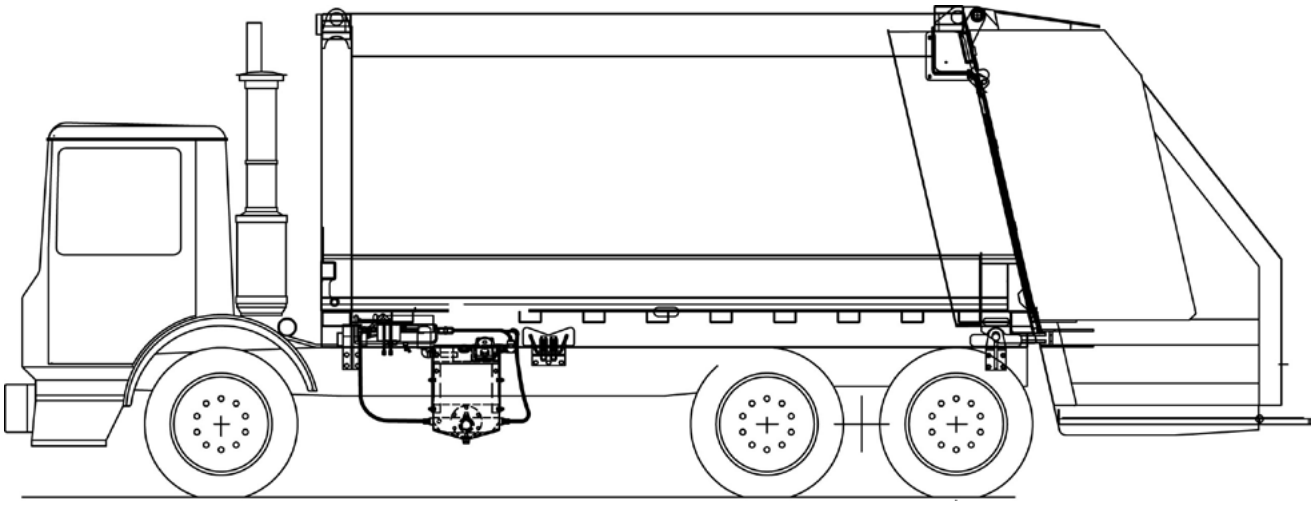

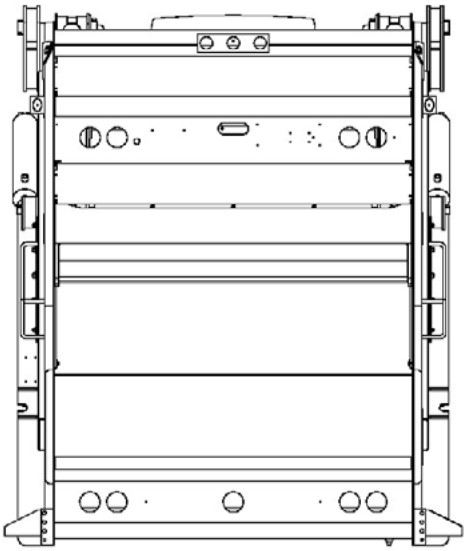

Paint and options layout detail
Use this form to describe paint schemes
Be specific about dimensions and details

Sales Order #		Submitted by	
Customer			
Paint Color 1			
Paint Color 2			
Paint Color 3			
Chassis Make			
Chassis Model			
Wheelbase			
Body Size		Approved by	

PowerTrak® Commercial

High-Compaction Rear Loader

Standard Equipment Features included in Base Price

- 3.64 yd3 hopper
- Smooth side body construction
- Extra-duty 80,000 psi body
- Bolt-on ANSI compliant rear riding steps
- Tailgate service props
- Remote mount cast iron roller bearing gear pump (less PTO)
- Chrome-plated cylinder rods
- Chrome-plated ejector cylinder sleeves
- Underbody mounted oil tank
- Level/temperature/sight gauge for hydraulic oil tank
- Oil suction shut-off valve
- 3-micron return line filter with magnetic trap and in-cab filter bypass monitor
- 100-micron suction line strainer
- Regenerative valve for fast packer and reload times
- Neutral safety switch for automatic transmissions only
- Body side access door with step and grab handle
- 5 lb. In-cab Fire Extinguisher
- Right side buzzer controls
- Right side packer controls
- Backup alarm
- Backup and license plate light
- LED Center-mounted brake light
- LED Duplicate high and low mount stop, turn, and tail lights
- LED Mid-body turn signals
- LED FMVSS #108 clearance lights and reflectors
- ICC reflective tape
- Rear camera bracket and flood lights - reverse activated
- Body undercoating
- Customer’s choice of one color finish paint from Color Smart brochure
- Standard 1-year (2,000 hours of operation) warranty
- ANSI Z 245.1-2017 compliant
- Cavity coat and joint sealer
- Safety Triangle
- Abrasion resistant hydraulic hoses

Return to Index Page

2020 PowerTrak® Commercial High-Compaction Rear Loader - Sales Order Form			
Base Units PowerTrak® Commercial High-Compaction Rear Loader- EJECT ONLY			
☐	20 cubic yard - Custom and Weight Distribution Required Prior To Order		
☐	25 cubic yard		$ 79,586
☐	27 cubic yard		$ 81,236
☐	32 cubic yard		$ 84,301
Hopper Size			3.64 yd^3
CHASSIS MUST COMFORM WITH HEIL'S MOST CURRENT CHASSIS SPECIFICATIONS AT WWW.HEIL.COM			
Mounting Options			
☐	Full Factory Mount for Eject Models		$ 3,044
☐	Semi-Mount - consists of frame cut-off, permanent mounting brackets and light electrical wiring only		$ 1,519
☐	Strap Mount - chassis must be suitable for temporary mount when received - Heil will connect lights and provide temporary mounting brackets		$ 870
☐	Mount at Dealer Destination		$ 783
Power Take Off / Pump Options			
☐	Remote Mount Gear Pump		STD
☐	Direct Mount Gear Pump Requires Custom approval for any 3000 Series Allison Transmission Equipped Chassis'		$ 767
☐	Direct Mount Vane Pump		$ 1,277
☐	Front Mount Vane Pump		$ 4,687
☐	Operate at Idle (OAI) Remote Mount Vane Pump with Transmission Driven, Constant Drive PTO		$ 8,667
☐	Operate at Idle (OAI) Front Mount Tandem Vane Pump		$ 7,328
☐	Clutch Shift PTO		$ 3,130
☐	Clutch Shift - Extended Shaft PTO with Gear Pump		$ 3,966
☐	Constant Drive - Extended Shaft PTO with Gear Pump		$ 3,966
Certain transmission / chassis configurations may not have proper clearance to allow direct mount or live power systems driven off of the transmission			
Lighting and Electrical Accessories			
☐	Hopper Work Light Kit - switch on tailgate		$ 376
☐	Hopper Work Light Kit - switch in cab		$ 376
☐	Dual Hopper Work Light Kit - two lights - switch on tailgate		$ 500
☐	Dual Hopper Work Light Kit - two lights - switch in cab		$ 500
☐	Dual Work Lights Outside of Hopper		$ 500
☐	Body Side Backing Assist Lights - reverse activated		$ 536
☐	LED Body Side Backing Assist Lights - reverse activated		$ 819
☐	Multi-Function LED Strobe / Turn Lamps - includes LED light package for entire unit		$ 649
☐	Municipal Lights with Dual 7" Amber LEDs & Overhead Flood Light		$ 1,530
☐	Strobe Light, Amber - upper LH corner of tailgate - in-cab switch		$ 711
☐	Dual Strobe Lights, Amber - upper LH & RH on tailgate - in-cab switch		$ 1,030
☐	Strobe Light, Amber - mounted right-center, front of body - in-cab switch		$ 711
☐	Dual Front LED Oval Strobe Lights, Amber - in-cab switch		$ 819
☐	Dual Rear LED Oval Strobe Lights, Amber - in-cab switch		$ 819
☐	Dual Rear LED Oval Strobe Lights, Amber - pump activated		$ 819
☐	Strobe Light bracket on upper tailgate		$ 216
☐	Left Hand Buzzer Kit		$ 180
☐	Whelen Strobe Lights Kit		$ 3,750
Container Handling / Cart Tipper Options - CUSTOMER SUPPLIED CART TIPPERS ARE NOT ADMISSIBLE			
☐	12,000 Pound Line Pull Drum Winch with Control Kit		$ 6,190
☐	15,000 Pound Line Pull Reeving Cylinder with Control Kit		$ 6,875
☐	15,000 Pound Line Pull Recessed Reeving Cylinder with Control Kit		$ 8,611
	Recessed Reeving kits are not applicable on units less than 25 yard without custom approval		$ -
☐	Roll Bar Adjustable with Control Kit		$ 4,372
☐	Lip and Latch Kit - to suit application without cart tipper(s)		$ 1,633
☐	Lip and Latch Kit - to suit application with cart tipper(s)		$ 1,741
	☐ Single Tipper Center Mounted ☐ Single Tipper Offset to Curbside ☐ Dual Tippers		$ -
☐	Single Control Valve Section with Control Handle		$ 1,406
☐	Double Control Valve Section with Control Handles		$ 2,158
☐	Single Cart Tipper Control Valve, Handle, Plumbing and Hose Kit		$ 2,106
☐	Dual Cart Tipper Control Valve, Handle, Plumbing and Hose Kit		$ 3,425
☐	Bayne Cart Tipper - Specify Model - Includes Controls, Valves, Plumbing, and Installation		SEE BAYNE
☐	Customer Installed Single Cart Tipper Kit - Bayne Bracket, Control Valve, Handle, Plumbing and Hose Kit		$ 2,467
☐	Customer Installed Double Cart Tipper Kit - Bayne Bracket, Control Valve, Handle, Plumbing and Hose Kit		$ 3,780
Body Options			
☐	Hopper Floor Overlay Kit (3/16" - 150,000 psi)		$ 1,463
☐	PowerTrak Comm. H.D. Contractors Package (incl. 3/16" hopper floor overlay liner and 10 ga hopper wall overlay liners @ 400 BHN - 145,000 psi)		$ 2,323
☐	Body Front Head Closure Kit		$ 814
☐	Body Front Head Splash Guard (Extends the front head an extra 11.5")		$ 350
☐	Side Door Interlock Kit - shuts down pump when open (Requires Clutch Shift PTO)		$ 556
☐	Shur-Lock™ Hydraulic Tailgate Locks		$ 4,341
☐	Hydraulic Pressure Gauge Kit (shipped loose in cab)		$ 324
☐	High Pressure Filter Kit		$ 963
☐	Hydraulic Oil Tank Heater - 500 watt		$ 1,262
☐	Hydraulic Tank Low Oil Level Warning Kit		$ 1,148
☐	In-Body Oil Tank		$ 1,308
☐	60 Gallon Washout Tank		$ 2,153
☐	20 lb. Fire Extinguisher with Bracket		$ 525
☐	Dual 20 lb. Fire Extinguisher with Bracket		$ 1,056

Return to Index Page

2020 PowerTrak® Commercial High-Compaction Rear Loader - Sales Order Form			
☐	Tool Box (18" x 18" x 36") - frame mounted		$ 860
☐	Tool Box (18" x 18" x 24") - frame mounted		$ 814
☐	Broom and Shovel Rack - mounted on tailgate		$ 232
☐	Mud Flaps - anti-sail / anti-splash - mounted ahead of rear tires		$ 242
☐	Mud Flaps - anti-sail / anti-splash - tailgate mounted behind rear tires		$ 330
☐	Mud Guards - steel - mounted ahead of rear tires		$ 350
☐	5 Gallon Cooler and Bracket - frame mounted		$ 376
☐	Return Line Check Valve Kit		$ 536
☐	1/4" Body Floor Kit		$ 2,549
☐	Roof Tube Cover Kit		$ 1,107
☐	Fender Extension Kit		$ 773
☐	Roadway Sign Frames		$ 2,148
☐	Spill Kit - In Cab		$ 361
☐	Spill Kit - Front of Body		$ 474
☐	Hydraulic Oil Tank Quick Disconnect Kit - For use with filter buggy		$ 865
☐	Anti-Back Pack Valve Kit		$ 1,009
☐	PTO Hour Meter *available only if PTO is selected*		$ 200
Camera Systems			
All camera systems are mounted with protective camera brackets and twin tailgate flood lights			
CAMERA MONITOR LOCATION WILL BE CAB ROOF MOUNTED			
Swivel monitor bracket will be provided for dual drive chassis			
3rd Eye® Camera Systems & 3rd® Eye Digital			
Note: Camera systems will accommodate a maximum of 6 cameras, not including driver and forward facing cameras included in 3rd Eye® Digital system			
☐	Base 3rd Eye® Single Camera System with 7" STD. monitor and Single Camera Mounted on Tailgate		$ 2,148
☐	Add on 3rd Eye® Camera (LH Cab) - Camera System Price Adder **(Only available if base camera is selected)**		$ 572
☐	Add on 3rd Eye® Camera (RH Cab) - Camera System Price Adder **(Only available if base camera is selected)**		$ 572
☐	Add on 3rd Eye® Camera (LH Alley) - Camera System Price Adder **(Only available if base camera is selected)**		$ 572
☐	Add on 3rd Eye® Camera (RH Alley) - Camera System Price Adder **(Only available if base camera is selected)**		$ 572
☐	3rd Eye® Digital System: Includes (Driver and Forward Facing Camera (Window Unit), and Gateway - (In-Cab Monitor Not Included) - *Digital monitoring service not included and must be purchased and activated though 3rd Eye post delivery *		$ 3,317
AWTI ™ Radar Systems			
☐	AWTI™ Radar System used in conjunction with 3rd Eye Cameras - Must Select Camera from above 3rd Eye Camera Options		$ 2,359
Load Cell Scale Systems			
☐	Heil Optimum Payload System (HOPS) using Air-Weigh Axle Scales		$ 9,275
☐	Air-Weigh™ Axle Scale System without Interlock		$ 8,652
Auxiliary Axle Options			
* NOTE: All axles MUST BE installed with tires so chassis can be re-certified to new GAWR and GVWR ratings			
Watson & Chalin™ Options			
☐	Watson & Chalin™ Rigid Axle: 25,000 pound capacity, hub piloted or 20" spoke wheel hubs, 30/30 brake chambers, automatic slack adjusters, 1,300 cubic inch air tank and regulator kit - for pusher applications		$ 15,017
Hendrickson™ Options			
☐	Hendrickson™ Steerable Pusher Axle: 20,000 pound capacity		$ 15,229
Auxiliary Axle Tire Options			
☐	255/70R-22.5 - load range H, 5,510 pound single max load at 120 psi with rim - 2 tires installed		$ 2,379
☐	275/70R-22.5 - load range H, 7,000 pound single max load at 120 psi with rim - 2 tires installed		$ 3,008
☐	Upgrade to Polished Aluminum Wheels (Set of Two)		$ 1,545
* Note: All auxiliary applications must be approved by Heil prior to order acceptance			
CNG Installation -			
☐	Top Of Body -CNG Installation Charge - Includes brackets, hardware, and mounting of approved CNG system		$ 5,969
☐	Front Of Body -CNG Installation Charge - Includes brackets, hardware, and mounting of approved CNG system		$ 5,969
Extended Complete Body Warranty Options			
☐	Two (2) Year (Months 13-24) (Maximum 4,000 hrs. of Operation) Complete Heil Body Warranty		$ 3,543
☐	Three (3) Year (Months 13-36) (Maximum 6,000 hrs. of Operation) Complete Heil Body Warranty		$ 7,153
☐	Four (4) Year (Months 13-48) (Maximum 8,000 hrs. of Operation) Complete Heil Body Warranty		$ 10,707
☐	Five (5) Year (Months 13-60) (Maximum 10,000 hrs. of Operation) Complete Heil Body Warranty		$ 14,250
Extended Cylinder Warranty Options			
☐	Two (2) Year (Months 13-24) (Maximum 4,000 hrs. of Operation) All Cylinder Warranty -		$ 1,200
☐	Three (3) Year (Months 13-36) (Maximum 6,000 hrs. of Operation) All Cylinder Warranty -		$ 2,477
☐	Four (4) Year (Months 13-48) (Maximum 8,000 hrs. of Operation) All Cylinder Warranty -		$ 3,687
☐	Five (5) Year) (Months 13-60) (Maximum 10,000 hrs. of Operation) All Cylinder Warranty-		$ 4,738
Extended Hydraulic Pump and Valve Warranty Options			
☐	Two (2) Year (Months 13-24) (Maximum 4,000 hours of operation) Hydraulic Pump and Valve warranty *Not needed if purchasing extended complete body warranty*		$ 1,179
☐	Three (3) Year (Months 13-36) (Maximum 6,000 hours of operation) Hydraulic Pump and Valve warranty *Not needed if purchasing extended complete body warranty*		$ 2,431
☐	Four (4) Year (Months 13-48) (Maximum 8,000 hours of operation) Hydraulic Pump and Valve warranty *Not needed if purchasing extended complete body warranty*		$ 3,615
☐	Five (5) Year (Months 13-60) (Maximum 10,000 hours of operation) Hydraulic Pump and Valve warranty *Not needed if purchasing extended complete body warranty*		$ 4,645
Paint Options			
NOTE: LIST PAINT CODES ON PAINT DIAGRAM			
☐	Customized Paint Color - Paint Color Code NOT included in the Color Smart Brochure		$ 417
☐	Two Tone Paint		$ 1,581
☐	Paint Striping - first stripe		$ 1,329
☐	Paint Striping - each additional stripe		$ 742
☐	Metallic Paint		$ 7,210
☐	Clear coat Finish		$ 1,844
☐	Anti-Graffiti Clear coat Finish		$ 2,647
☐	Prime Paint Only - deduct		$ (970)
TOTALS			
	Total from Options Above (MSRP)		**$ -**
	Additional Options (Custom's, Chassis Mods, Etc.) Total		
	Subtotal		**$ -**
	Dealer Discount (%)	**0%**	**$ -**
	Dealer Net Price		**$ -**
	Surcharge if Applicable		**$ -**
	Additional Discount (SPR)		**$ -**
	Freight		**$ -**
	Total Price per Unit		**$ -**

PowerTrak® Commercial

High-Compaction Rear Loader

Paint Stripe and Accessory Requirements

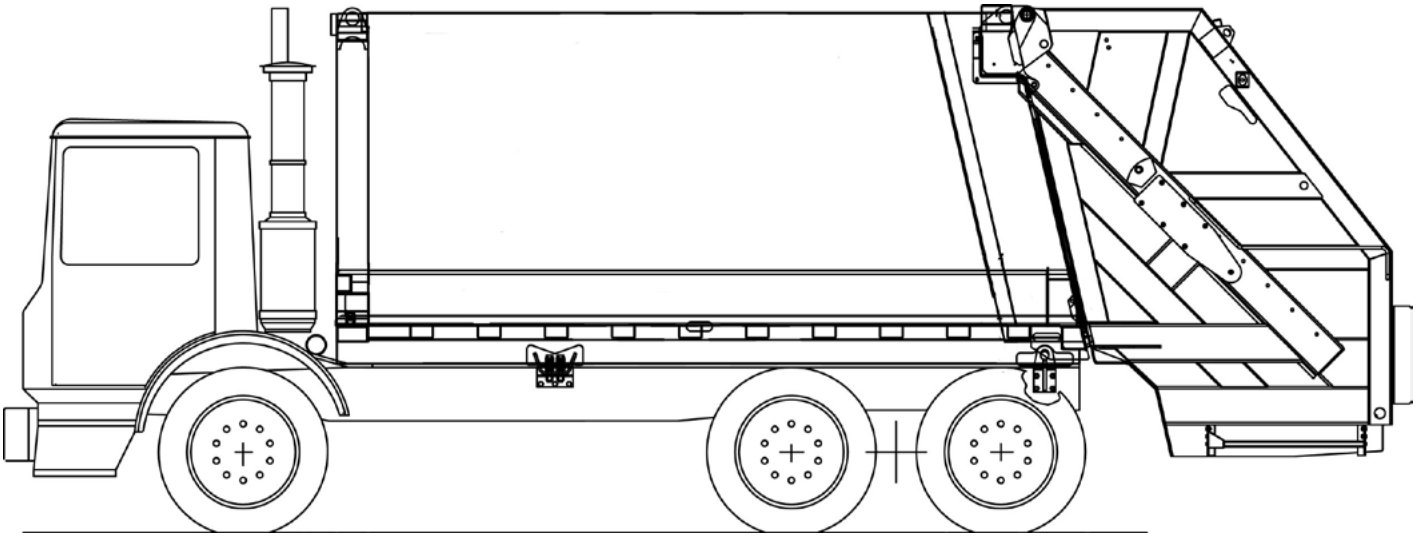

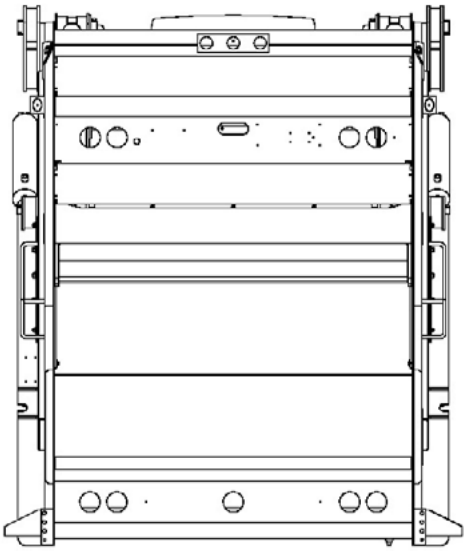

Paint and options layout detail
Use this form to describe paint schemes
Be specific about dimensions and details

Sales Order #		Submitted by	
Customer			
Paint Color 1			
Paint Color 2			
Paint Color 3			
Chassis Make			
Chassis Model			
Wheelbase			
Body Size		Approved by	

PowerTrak® Commercial PLUS

High-Compaction Tag Axle Rear Loader

Standard Equipment Features included in Base Price

- 3.64 YD3 HOPPER
- NON-STEER 14,000 POUND CAPACITY TAG AXLE - TIRES NOT INCLUDED
- SMOOTH SIDE BODY CONSTRUCTION
- EXTRA-DUTY 80,000 PSI BODY
- BOLT-ON ANSI COMPLIANT REAR RIDING STEPS
- TAILGATE SERVICE PROPS
- REMOTE MOUNT CAST IRON ROLLER BEARING GEAR PUMP (LESS PTO)
- CHROME-PLATED CYLINDER RODS
- CHROME-PLATED EJECTOR CYLINDER SLEEVES
- UNDERBODY MOUNTED OIL TANK
- LEVEL/TEMPERATURE/SIGHT GAUGE FOR HYDRAULIC OIL TANK
- OIL SUCTION SHUT-OFF VALVE
- 3-MICRON RETURN LINE FILTER WITH MAGNETIC TRAP AND IN-CAB FILTER BYPASS MONITOR
- 100-MICRON SUCTION LINE STRAINER
- REGENERATIVE VALVE FOR FAST PACKER AND RELOAD TIMES
- NEUTRAL SAFETY SWITCH FOR AUTOMATIC TRANSMISSIONS ONLY
- BODY SIDE ACCESS DOOR WITH STEP AND GRAB HANDLE
- 5 LB. IN-CAB FIRE EXTINGUISHER
- RIGHT SIDE BUZZER CONTROLS
- RIGHT SIDE PACKER CONTROLS
- BACKUP ALARM
- BACKUP AND LICENSE PLATE LIGHT
- LED CENTER-MOUNTED BRAKE LIGHT
- LED DUPLICATE HIGH AND LOW MOUNT STOP, TURN, AND TAIL LIGHTS
- LED MID-BODY TURN SIGNALS
- LED FMVSS #108 CLEARANCE LIGHTS AND REFLECTORS
- ICC REFLECTIVE TAPE
- REAR CAMERA BRACKET AND FLOOD LIGHTS - REVERSE ACTIVATED
- BODY UNDERCOATING
- CUSTOMER'S CHOICE OF ONE COLOR FINISH PAINT FROM COLOR SMART BROCHURE
- STANDARD 1-YEAR (2,000 HOURS OF OPERATION) WARRANTY
- ANSI Z 245.1-2017 COMPLIANT
- CAVITY COAT AND JOINT SEALER
- ABRASION RESISTANT HYDRAULIC HOSES
- SAFETY TRIANGLE

Return to Index Page

2020 PowerTrak® Commercial PLUS High-Compaction Tag Axle Rear Loader - Sales Order Form

Base Units PowerTrak® Commercial PLUS High-Compaction Tag Axle Rear Loader - EJECT ONLY			
☐	25 cubic yard - Includes Silent Drive Tag Axle*		$ 96,365
☐	27 cubic yard - Includes Silent Drive Tag Axle*		$ 98,021
☐	32 cubic yard - Includes Silent Drive Tag Axle*		$ 99,676
Hopper Size			3.64 yd³
*Tag Axle does not include Tires			
CHASSIS MUST COMFORM WITH HEIL'S MOST CURRENT CHASSIS SPECIFICATIONS AT WWW.HEIL.COM			
Mounting Options			
☐	Full Factory Mount for Eject Models		$ 3,105
☐	Semi-Mount - consists of frame cut-off, permanent mounting brackets and light electrical wiring only		$ 1,550
☐	Strap Mount - chassis must be suitable for temporary mount when received - Heil will connect lights and provide temporary mounting brackets		$ 891
☐	Mount at Dealer Destination		$ 798
Power Take Off / Pump Options			
☐	Remote Mount Gear Pump		STD
☐	Direct Mount Gear Pump *Requires Custom approval for 3000 Series Allison Transmission Equipped Chassis*		$ 767
☐	Direct Mount Vane Pump		$ 1,277
☐	Front Mount Vane Pump		$ 4,687
☐	Operate at Idle (OAI) Front Mount Vane Pump		$ 7,328
☐	Clutch Shift PTO		$ 3,130
☐	Clutch Shift - Extended Shaft PTO with Gear Pump		$ 3,966
☐	Constant Drive - Extended Shaft PTO with Gear Pump		$ 3,966
Certain transmission / chassis configurations may not have proper clearance to allow direct mount or live power systems driven off of the transmission			
Lighting and Electrical Accessories			
☐	Hopper Work Light Kit - switch on tailgate		$ 376
☐	Hopper Work Light Kit - switch in cab		$ 376
☐	Dual Hopper Work Light Kit - two lights - switch on tailgate		$ 500
☐	Dual Hopper Work Light Kit - two lights - switch in cab		$ 500
☐	Dual Work Lights Outside of Hopper		$ 500
☐	Body Side Backing Assist Lights - reverse activated		$ 536
☐	LED Body Side Backing Assist Lights - reverse activated		$ 819
☐	Multi-Function LED Strobe / Turn Lamps - includes LED light package for entire unit		$ 649
☐	Municipal Lights with Dual 7" Amber LEDs & Overhead Flood Light		$ 1,530
☐	Strobe Light, Amber - upper LH corner of tailgate - in-cab switch		$ 711
☐	Dual Strobe Lights, Amber - upper LH & RH on tailgate - in-cab switch		$ 1,030
☐	Strobe Light, Amber - mounted right-center, front of body - in-cab switch		$ 711
☐	Dual Front LED Oval Strobe Lights, Amber - in-cab switch		$ 819
☐	Dual Rear LED Oval Strobe Lights, Amber - in-cab switch		$ 819
☐	Dual Rear LED Oval Strobe Lights, Amber - pump activated		$ 819
☐	Strobe Light bracket on upper tailgate		$ 216
☐	Left Hand Buzzer Kit		$ 180
☐	Whelen Strobe Lights Kit		$ 3,750
Container Handling / Cart Tipper Options			
☐	12,000 Pound Line Pull Drum Winch with Control Kit		$ 6,190
☐	15,000 Pound Line Pull Reeving Cylinder with Control Kit		$ 6,875
☐	15,000 Pound Line Pull Recessed Reeving Cylinder with Control Kit		$ 8,611
	Recessed Reeving kits are not applicable on units less than 25 yard		$ -
☐	Standard Roll Bar with Control Kit - Latch Pivot		$ 4,372
☐	Roll Bar with Control Kit - Mid-Latch Pivot		$ 4,372
☐	Roll Bar with Control Kit - Bolster Pivot		$ 4,372
All of the above mechanisms require the latch kit below, except for Arm Mechanism			
☐	Lip and Latch Kit - to suit application without cart tipper(s)		$ 1,633
☐	Lip and Latch Kit - to suit application with cart tipper(s)		$ 1,741
	☐ Single Tipper Center Mounted ☐ Single Tipper Offset to Curbside ☐ Dual Tippers		
☐	Single Control Valve Section with Control Handle		$ 1,406
☐	Double Control Valve Section with Control Handles		$ 2,158
☐	Single Cart Tipper Control Valve, Handle, Plumbing and Hose Kit		$ 2,106
☐	Dual Cart Tipper Control Valve, Handle, Plumbing and Hose Kit		$ 3,425
☐	Bayne Cart Tipper - Specify Model - Includes Controls, Valves, Plumbing, and Installation		See Bayne
☐	Customer Installed Single Cart Tipper Kit - Bayne Bracket, Control Valve, Handle, Plumbing and Hose Kit		$ 2,467
☐	Customer Installed Double Cart Tipper Kit - Bayne Bracket, Control Valve, Handle, Plumbing and Hose Kit		$ 3,780
CUSTOMER SUPPLIED CART TIPPERS ARE NOT ADMISSIBLE			
Body Options			
☐	PowerTrak Comm. H.D. Contractors Package (incl. 3/16" hopper floor overlay liner and 10 ga hopper wall overlay liners @ 400 BHN - 180,000 psi)		$ 2,323
☐	Body Front Head Closure Kit		$ 814
☐	Body Front Head Splash Guard (Extends the front head an extra 11.5")		$ 350
☐	Side Door Interlock Kit - shuts down pump when open (Requires Clutch Shift PTO)		$ 556
☐	Hydraulic Pressure Gauge Kit (shipped loose in cab)		$ 324
☐	High Pressure Filter Kit		$ 963
☐	Hydraulic Oil Tank Heater - 500 watt		$ 1,262
☐	Hydraulic Tank Low Oil Level Warning Kit		$ 1,148
☐	In-Body Oil Tank		$ 1,308
☐	60 Gallon Washout Tank		$ 2,153
☐	20 lb. Fire Extinguisher with Bracket		$ 525
☐	Dual 20 lb. Fire Extinguisher with Bracket		$ 1,056
☐	Tool Box (18" x 18" x 36") - frame mounted		$ 860
☐	Tool Box (18" x 18" x 24") - frame mounted		$ 814
☐	Broom and Shovel Rack - mounted on tailgate		$ 232
☐	Mud Flaps - anti-sail / anti-splash - mounted ahead of rear tires		$ 242
☐	Mud Flaps - anti-sail / anti-splash - tailgate mounted behind rear tires		$ 330
☐	Mud Guards - steel - mounted ahead of rear tires		$ 350
☐	5 Gallon Cooler and Bracket - frame mounted		$ 376
☐	Return Line Check Valve Kit		$ 536
☐	1/4" Body Floor Kit		$ 2,549
☐	Roof Tube Cover Kit		$ 1,107
☐	Fender Extension Kit		$ 773
☐	Roadway Sign Frames		$ 2,148
☐	Spill Kit - In Cab		$ 361
☐	Spill Kit - Front of Body		$ 474
☐	Hydraulic Oil Tank Quick Disconnect Kit - For use with filter buggy		$ 865
☐	Anti-Back Pack Valve Kit		$ 1,009
☐	PTO Hour Meter *available only if PTO is selected*		$ 200

Return to Index Page

2020 PowerTrak® Commercial PLUS High-Compaction Tag Axle Rear Loader - Sales Order Form			
Camera Systems			
All camera systems are mounted with protective camera brackets and twin tailgate flood lights			
CAMERA MONITOR LOCATION WILL BE CAB ROOF MOUNTED			
Swivel monitor bracket will be provided for dual drive chassis			
3rd Eye® Camera Systems & 3rd® Eye Digital			
Note: Camera systems will accommodate a maximum of 6 cameras, not including driver and forward facing cameras included in 3rd Eye® Digital system			
☐	Base 3rd Eye® Single Camera System with 7" STD. monitor and Single Camera Mounted on Tailgate		$ 2,148
☐	Add on 3rd Eye® Camera (LH Cab) - Camera System Price Adder **(Only available if base camera is selected)**		$ 572
☐	Add on 3rd Eye® Camera (RH Cab) - Camera System Price Adder **(Only available if base camera is selected)**		$ 572
☐	Add on 3rd Eye® Camera (LH Alley) - Camera System Price Adder **(Only available if base camera is selected)**		$ 572
☐	Add on 3rd Eye® Camera (RH Alley) - Camera System Price Adder **(Only available if base camera is selected)**		$ 572
☐	3rd Eye® Digital System: Includes (Driver and Forward Facing Camera (Window Unit), and Gateway - (In-Cab Monitor Not Included) - *Digital monitoring service not included and must be purchased and activated though 3rd Eye post delivery *		$ 3,317
AWTI ™ Radar Systems			
☐	AWTI™ Radar System used in conjunction with 3rd Eye Cameras - Must Select Camera from above 3rd Eye Camera Options		$ 2,359
Load Cell Scale Systems			
☐	Heil Optimum Payload System (HOPS) using Air-Weigh Axle Scales		$ 9,275
☐	Air-Weigh™ Axle Scale System without Interlock		$ 8,652
Auxiliary Axle Options			
* NOTE: All axles MUST BE installed with tires so chassis can be re-certified to new GAWR and GVWR ratings			
Watson & Chalin™ Options			
☐	Watson & Chalin™ Rigid Axle: 25,000 pound capacity, hub piloted or 20" spoke wheel hubs, 30/30 brake chambers, automatic slack adjusters, 1,300 cubic inch air tank and regulator kit - for pusher applications		$ 15,017
Hendrickson™ Options			
☐	Hendrickson™ Steerable Pusher Axle: 20,000 pound capacity		$ 15,229
Auxiliary Axle Tire Options			
☐	255/70R-22.5 - load range H, 5,510 pound single max load at 120 psi with rim - 2 tires installed		$ 2,379
☐	275/70R-22.5 - load range H, 7,000 pound single max load at 120 psi with rim - 2 tires installed		$ 3,008
☐	255/70R-22.5 - load range H, 5,510 pound single max load at 120 psi with rim - 4 tires installed, Pusher and Tag		$ 4,846
☐	275/70R-22.5 - load range H, 7,000 pound single max load at 120 psi with rim - 4 tires installed, Pusher and Tag		$ 6,129
☐	Upgrade to Polished Aluminum Wheels (Set of Two)		$ 1,545
* Note: All auxiliary applications must be approved by Heil prior to order acceptance			
CNG Installation -			
☐	Top Of Body -CNG Installation Charge - Includes brackets, hardware, and mounting of approved CNG system		$ 5,969
☐	Front Of Body -CNG Installation Charge - Includes brackets, hardware, and mounting of approved CNG system		$ 5,969
Extended Complete Body Warranty Options			
☐	Two (2) Year (Months 13-24) (Maximum 4,000 hrs. of Operation) Complete Heil Body Warranty		$ 3,543
☐	Three (3) Year (Months 13-36) (Maximum 6,000 hrs. of Operation) Complete Heil Body Warranty		$ 7,153
☐	Four (4) Year (Months 13-48) (Maximum 8,000 hrs. of Operation) Complete Heil Body Warranty		$ 10,707
☐	Five (5) Year (Months 13-60) (Maximum 10,000 hrs. of Operation) Complete Heil Body Warranty		$ 14,250
Extended Cylinder Warranty Options			
☐	Two (2) Year (Months 13-24) (Maximum 4,000 hrs. of Operation) All Cylinder Warranty -		$ 1,200
☐	Three (3) Year (Months 13-36) (Maximum 6,000 hrs. of Operation) All Cylinder Warranty -		$ 2,477
☐	Four (4) Year (Months 13-48) (Maximum 8,000 hrs. of Operation) All Cylinder Warranty -		$ 3,687
☐	Five (5) Year) (Months 13-60) (Maximum 10,000 hrs. of Operation) All Cylinder Warranty-		$ 4,738
Extended Hydraulic Pump and Valve Warranty Options			
☐	Two (2) Year (Months 13-24) (Maximum 4,000 hours of operation) Hydraulic Pump and Valve warranty *Not needed if purchasing extended complete body warranty*		$ 1,179
☐	Three (3) Year (Months 13-36) (Maximum 6,000 hours of operation) Hydraulic Pump and Valve warranty *Not needed if purchasing extended complete body warranty*		$ 2,431
☐	Four (4) Year (Months 13-48) (Maximum 8,000 hours of operation) Hydraulic Pump and Valve warranty *Not needed if purchasing extended complete body warranty*		$ 3,615
☐	Five (5) Year (Months 13-60) (Maximum 10,000 hours of operation) Hydraulic Pump and Valve warranty *Not needed if purchasing extended complete body warranty*		$ 4,645
Paint Options			
NOTE: LIST PAINT CODES ON PAINT DIAGRAM			
☐	Customized Paint Color - Paint Color Code NOT included in the Color Smart Brochure		$ 417
☐	Two Tone Paint		$ 1,581
☐	Paint Striping - first stripe		$ 1,329
☐	Paint Striping - each additional stripe		$ 742
☐	Metallic Paint		$ 7,210
☐	Clear coat Finish		$ 1,844
☐	Anti-Graffiti Clear coat Finish		$ 2,647
☐	Prime Paint Only - deduct		$ (970)
TOTALS			
	Total from Options Above (MSRP)		**$ -**
	Additional Options (Custom's, Chassis Mods, Etc.) Total		
	Subtotal		**$ -**
	Dealer Discount (%)	**0%**	**$ -**
	Dealer Net Price		**$ -**
	Surcharge if Applicable		**$ -**
	Additional Discount (SPR)		**$ -**
	Freight		**$ -**
	Total Price per Unit		**$ -**

Return to Index Page

PowerTrak® Commercial PLUS

High-Compaction Tag Axle Rear Loader

Paint Stripe and Accessory Requirements

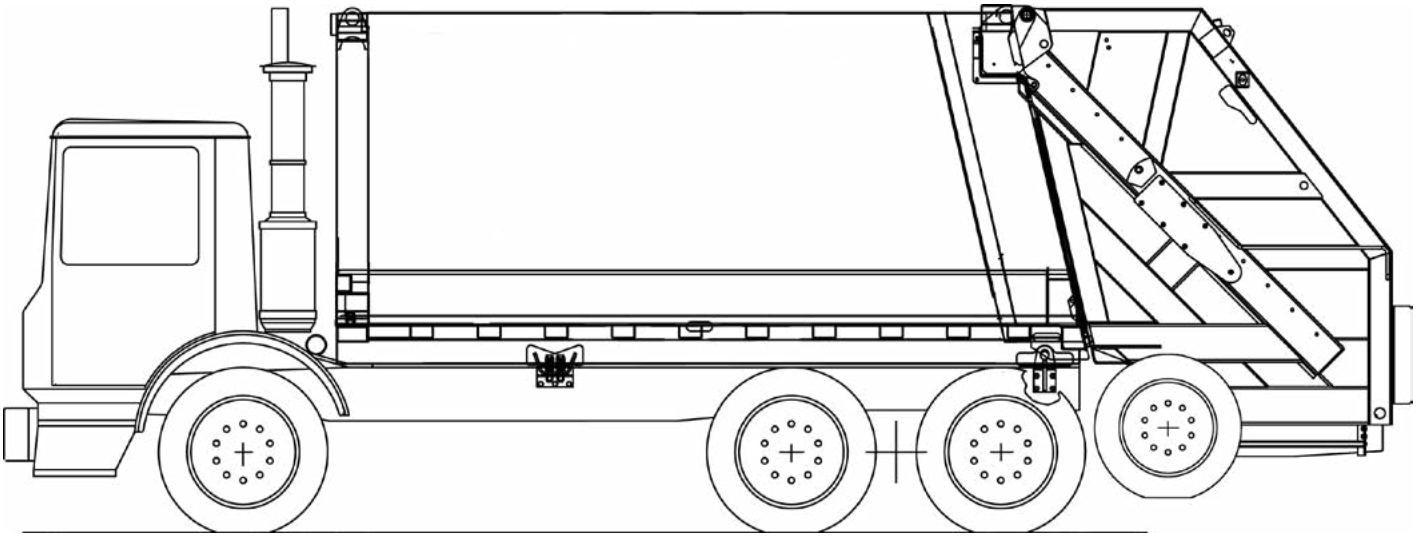

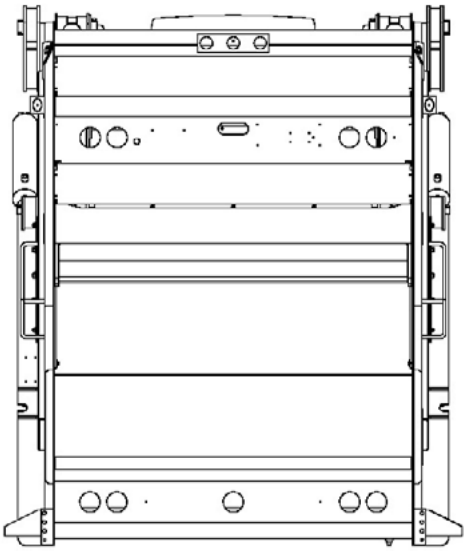

Paint and options layout detail
Use this form to describe paint schemes
Be specific about dimensions and details

Sales Order #		Submitted by	
Customer			
Paint Color 1			
Paint Color 2			
Paint Color 3			
Chassis Make			
Chassis Model			
Wheelbase			
Body Size		Approved by	

DuraPack® Rapid Rail®

High-Performance Automated Side Loader

Standard Equipment Features included in Base Price

- 4.7 yd3 hopper
- 96 in. Lift reach
- Standard 1-year (2,000 hours of operation) warranty
- Lift capacity up to 1,600 lbs.
- Street side door with step and grab handle (includes side door interlock)
- Under hopper liquid sump with 2 clean-out doors and steel rake
- Body service props for service hoist models
- Tailgate service props
- Fully automatic Shur-Lock™ tailgate locks
- O.I.G.A.I. Front mount tandem vane pump system
- Chassis frame mounted oil tank with level/temperature gauge and oil suction shut-off valve
- 3-micron return line filter with magnetic trap and in-cab filter bypass monitor - in microns
- Abrasion-resistant hydraulic hoses
- In-cab packing controls, electric/air
- In-cab lift controls, electric, 5-button joystick
- In-cab tailgate controls, air
- 100-micron suction line strainer
- Cortex Controller™ with InSight™ diagnostic display and standard lift cycle counter
- Lift feathering kit
- 6-roller carriage
- Severe-duty packer wear bar kit - hopper only
- Safety triangle
- Solid-state control panel
- Grabber interlock kit - prevents lift raise with grabbers in the open position/grabbers opening in the lift raise position
- In-cab function and indicator lights
- Select-O-Pack
- AutoLiftTM
- Arm rest
- Lift reach warning
- Backup alarm
- Backup and license plate lights
- LED center-mounted brake light
- LED duplicate high and low mount stop, turn, and tail lights
- LED Mid-body turn signals
- LED FMVSS #108 clearance lights and reflectors
- ICC reflective tape
- Rear mud flaps - anti-sail/anti-splash
- Rear under ride guard
- Rear camera bracket and flood lights - reverse activated
- Customer’s choice of one color finish paint from Color Smart brochure
- ANSI Z 245.1-2017 compliant
- Cavity coat and joint sealer
- Remote packer lube kit
- 5 lb. in-cab fire extinguisher

Return to Index Page

2020 DuraPack® Rapid Rail® High-Performance Automated Side Loader - Sales Order Form			
Base Units DuraPack® Rapid Rail® High-Performance Automated Side Loader			
☐	22 cubic yard - CNrG Tailgate Not Available With This Body Size		$ 130,996
☐	24 cubic yard - CNrG Tailgate Not Available With This Body Size		$ 132,077
☐	26 cubic yard - CNrG Tailgate Reduces Tailgate Capacity by **2** Cubic Yards - **24 Cubic Yard Unit With CNrG**		$ 134,239
☐	28 cubic yard - CNrG Tailgate Reduces Tailgate Capacity by **2** Cubic Yards - **26 Cubic Yard Unit With CNrG**		$ 135,320
☐	33 cubic yard - CNrG Tailgate Reduces Tailgate Capacity by **2** Cubic Yards - **31 Cubic Yard Unit With CNrG**		$ 138,573
☐	EJECT		STD
☐	Service Hoist Kit		$ 4,656
☐	Serviceable Eject		$ 2,451
Hopper Size			4.7 yd³
CHASSIS MUST COMFORM WITH HEIL'S MOST CURRENT CHASSIS SPECIFICATIONS AT WWW.HEIL.COM			
Mounting Options			
☐	Full Factory Mount for Service Hoist, Eject Models, and Serviceable Eject		$ 5,840
☐	Mount at Dealer Destination		$ 783
Grabber and Lift Options			
☐	TriCuff Grabber - handles a variety of 30 to 110 gallon square, rectangular and round semi-automated and automated barrels		$ 1,396
☐	TriCuff Grip Rite Grabber - handles a variety of 30 to 110 gallon square, rectangular and round semi-automated and automated barrels. No Spring Tensioner		$ 1,667
☐	Belt Grabbers with Spring Loaded Inner Arm - to accommodate 60/90 gallon round automated barrels		$ 1,396
☐	Universal Belt Grabbers with Spring Loaded Inner Arm - to accommodate 90 - 300 gallon round automated barrels		$ 1,396
☐	Changeable Spring Steel Grabbers - for 60 and 90 gallon round automated barrels with 26" - 27" grab diameter		$ 1,396
☐	Changeable Spring Steel Grabbers - for 300 gallon round automated barrels with 41" - 43" grab diameter		$ 1,396
☐	Grabber storage bracket supplied at no charge when any TWO sets of spring steel grabbers are ordered		$ -
Power Take Off / Pump Options			
☐	Operate-in-gear-at-idle (OIGAI) Front Mount Tandem Vane Pump		STD
☐	Operate-in-gear-at-idle (OIGAI) Remote Mount Tandem Vane Pump with Transmission Driven, Constant Duty PTO		$ 3,131
☐	Clutch Shift - Extended Shaft PTO with Single Vane Pump		$ 4,300
☐	Constant Drive - Extended Shaft PTO with Single Vane Pump		$ 4,300
Lighting and Electrical Accessories			
☐	Hopper and Lift Work Light Kit - LED - two lights - in-cab switch		$ 773
☐	Multi-Function LED Strobe / Turn Lamps		$ 649
☐	Body Side Backing Assist Lights mounted front body bolster - reverse activated		$ 536
☐	Strobe Light, Amber - in-cab switch, pump on, and reverse activated - mounted lower tailgate		$ 711
☐	Dual Oval Flat LED Strobes - in-cab switch - mounted mid-tailgate		$ 1,123
☐	Dual Oval Flat LED Strobes - in-cab switch, pump on, and reverse activated - mounted mid-tailgate		$ 1,123
☐	Dual Front Oval LED Strobes		$ 819
☐	Strobe Light, Amber - in-cab switch - mounted on cab		$ 711
Lift Controls, Options and Accessories			
☐	Lift Cycle Counter In Addition to the Counter Provided with the Standard In Sight Display		$ 685
☐	Remote Lift Controls - mounted under seat on right hand side		$ 1,638
☐	Rapid Rail Style Control Box with paddle switches		$ 1,633
Body Options			
☐	Hopper and Body Floor Liner (3/16" - 150,000 psi)		$ 1,463
☐	1/4" AR400 Body Floor in lieu of standard 3/16" AR400		$ 1,360
☐	3" Hopper Drain Valve		$ 366
☐	Mud Guards - steel - mounted ahead of tires		$ 350
☐	Mud Flaps - anti-sail / anti-splash - ahead of rear tires		$ 242
☐	Hopper Hood		$ 2,096
☐	Manual Hopper Cover - Standard Cover - mesh expanded metal with extended handle accessible from ground		$ 1,288
☐	Manual Hopper Cover for use with Hopper Hood		$ 1,288
☐	Hydraulic Sliding Top Door with Lift Interlock and indicator light in cab - Cannot be used in conjunction with hopper hood		$ 7,086
☐	Triple Cart Holder - mounted on tailgate for transporting empty carts - Not Available with CNrG Tailgate CNG System		$ 386
☐	20 lb. Fire Extinguisher with Bracket		$ 530
☐	Dual 20 lb. Fire Extinguishers with Bracket		$ 1,056
☐	Tool Box (18" x 18" x 36") - frame mounted - available on Eject Models Only		$ 860
☐	Tool Box (18" x 18" x 24") - frame mounted - available on Eject Models Only		$ 814
☐	Tool Box (18" x 18" x 24") - bumper mounted		$ 814
☐	Hydraulic Pressure Gauge Kit (shipped loose in cab)		$ 324
☐	Hydraulic Oil Tank Heater - 500 watts		$ 1,262
☐	Hydraulic Tank Low Oil Level Warning Kit		$ 1,154
☐	Dual High Pressure Filter Kit		$ 1,906
☐	Rear Caution Decal		$ 304
☐	Return Line Check Valve Kit		$ 536
☐	Broom and Shovel Kit - Mounted Underbody - Includes Broom and Shovel		$ 227
☐	Hydraulic Oil Tank Quick Disconnect Kit - For use with filter buggy		$ 865
☐	Spill Kit		$ 474
☐	Fender Extension Kit		$ 773
☐	Sump Chutes		$ 494
☐	Tapered Roof Kit - Only Available in 28 cubic yard units - Helps reduce trash from blowing out		$ 1,586
☐	Low Profile Shur Lock Tailgate Locks MUST be used with Tag Axle Applications - Does not have T/G closed indicator flag		$ 386
☐	Infinity Series Packer/Eject Cylinders with scrapers and hardened rods to 50 HRC - Includes Five (5) Year Packer/Eject Cylinder Only Warranty that covers dents and dings (This Option is Required if purchasing extended warranty's below)		$ 3,245
Note: Hopper hood may not be ordered in conjunction with a sliding top door			
CNrG Tailgate Mounted CNG - Includes Installation Fee - Reduces Yardage Capacity 2 Cubic Yards			
☐	60 DGE CNG System -		$ 42,889
☐	75 DGE CNG System -		$ 44,676
☐	90 DGE CNG System -		$ 50,784
CNrG Options			
☐	Front Bumper Fill with Kill Cap		$ 1,329
☐	Remote Fill, StreetSide Rear Fill Port		$ 2,318
☐	Remote Fill, Curbside Rear Fill Port		$ 2,318
☐	Defuel Transfer Hose - 35 ft.		$ 2,034

2020 DuraPack® Rapid Rail® High-Performance Automated Side Loader - Sales Order Form			
AWTI ™ Radar Systems			
☐	AWTI™ Radar System used in conjunction with 3rd Eye Cameras - Must Select Camera from 3rd Eye Camera Options		$ 2,359
Camera Systems			
All camera systems are mounted with protective camera brackets and twin tailgate flood lights			
CAMERA MONITOR LOCATION WILL BE CAB ROOF MOUNTED			
Swivel monitor bracket will be provided for dual drive chassis			
3rd Eye® Camera Systems & 3rd® Eye Digital			
Note: Camera systems will accommodate a maximum of 6 cameras, not including driver and forward facing cameras included in 3rd Eye® Digital system			
☐	Base 3rd Eye® Single Camera System with monitor and Single Camera Mounted on Tailgate		$ 2,148
☐	Add on 3rd Eye® Camera (LH Cab) - Camera System Price Adder **(Only available if base camera is selected)**		$ 572
☐	Add on 3rd Eye® Camera (RH Cab) - Camera System Price Adder **(Only available if base camera is selected)**		$ 572
☐	Add on 3rd Eye® Camera (LH Alley) - Camera System Price Adder **(Only available if base camera is selected)**		$ 572
☐	Add on 3rd Eye® Camera (RH Alley) - Camera System Price Adder **(Only available if base camera is selected)**		$ 572
☐	Add on 3rd Eye® Camera (Hopper) - Camera System Price Adder **(Only available if base camera is selected)**		$ 572
☐	Add on 3rd Eye® Camera (Grabber) - Camera System Price Adder **(Only available if base camera is selected)**		$ 572
☐	3rd Eye® Digital System: Includes (Driver and Forward Facing Camera (Window Unit), and Gateway - (In-Cab Monitor Not Included) - *Digital monitoring service not included and must be purchased and activated though 3rd Eye post delivery *		$ 3,317
Load Cell Scale Systems			
☐	Heil Optimum Payload System (HOPS) using Air-Weigh Axle Scales		$ 9,275
☐	Air-Weigh™ Axle Scale System without Interlock		$ 8,652
Auxiliary Axle			
* NOTE: All axles MUST BE installed with tires so chassis can be re-certified to new GAWR and GVWR ratings. applications will automatically receive the low profile Shur Lock tailgate lock kit at the price listed below.			Tag Axle
Hendrickson™ Options			
☐	Hendrickson™ Pusher Axle-13,000 pound capacity, Non Steer - Narrow Track		$ 12,360
Auxiliary Axle Tire Options			
☐	255/70R-22.5 - load range H, 5,510 pound single max load at 120 psi with rim - 2 tires installed		$ 2,379
☐	275/70R-22.5 - load range H, 7,000 pound single max load at 120 psi with rim - 2 tires installed		$ 3,008
☐	Upgrade to Polished Aluminum Wheels (Set of Two)		$ 1,545
☐	Low profile Shur Lock tailgate lock kit.		$ 386
* Note: All auxiliary applications must be approved by Heil prior to order acceptance			
CNG Installation - Top of Body Installation			
☐	CNG Installation Charge - Includes brackets, hardware, and mounting of CNG system		$ 5,969
Extended Complete Body Warranty Options			
☐	Two (2) Year (Months 13-24) (Maximum 4,000 hrs. of Operation) Complete Heil Body & Lift Warranty Requires additional purchase of Infinity packer/eject cylinders from above		$ 4,352
☐	Three (3) Year (Months 13-36) (Maximum 6,000 hrs. of Operation) Complete Heil Body & Lift Warranty Requires additional purchase of Infinity packer/eject cylinders from above		$ 8,698
☐	Four (4) Year (Months 13-48) (Maximum 8,000 hrs. of Operation) Complete Heil Body & Lift Warranty Requires additional purchase of Infinity packer/eject cylinders from above		$ 13,004
☐	Five (5) Year (Months 13-60) (Maximum 10,000 hrs. of Operation) Complete Heil Body & Lift Warranty Requires additional purchase of Infinity packer/eject cylinders from above		$ 17,356
Extended Cylinder Warranty Options			
☐	Two (2) Year (Months 13-24) (Maximum 4,000 hrs. of Operation) All other Non-Infinity Cylinder Warranty - Requires additional purchase of Infinity packer/eject cylinders from above		$ 3,502
☐	Three (3) Year (Months 13-36) (Maximum 6,000 hrs. of Operation) All other Non-Infinity Cylinder Warranty - Requires additional purchase of Infinity packer/eject cylinders from above		$ 6,190
☐	Four (4) Year (Months 13-48) (Maximum 8,000 hrs. of Operation) All other Non-Infinity Cylinder Warranty - Requires additional purchase of Infinity packer/eject cylinders from above		$ 9,260
☐	Five (5) Year (Maximum 10,000 hrs. of Operation) All other Non-Infinity Cylinder Warranty - Requires purchase of Infinity packer or eject Cylinders from above		$ 11,827
Extended Hydraulic Pump and Valve Warranty Options			
☐	Two (2) Year (Months 13-24) (Maximum 4,000 hours of operation) Hydraulic Pump and Valve warranty *Not needed if purchasing extended complete body warranty*		$ 3,502
☐	Three (3) Year (Months 13-36) (Maximum 6,000 hours of operation) Hydraulic Pump and Valve warranty *Not needed if purchasing extended complete body warranty*		$ 6,190
☐	Four (4) Year (Months 13-48) (Maximum 8,000 hours of operation) Hydraulic Pump and Valve warranty *Not needed if purchasing extended complete body warranty*		$ 9,260
☐	Five (5) Year (Months 13-60) (Maximum 10,000 hours of operation) Hydraulic Pump and Valve warranty *Not needed if purchasing extended complete body warranty*		$ 11,827
Paint Options			
NOTE: LIST PAINT CODES ON PAINT DIAGRAM			
☐	Customized Paint Color - Paint Color Code NOT included in the Color Smart Brochure		$ 417
☐	Customized Lift Paint - Any color other than Visibility Yellow (Standard)		$ 345
☐	Two Tone Paint		$ 1,576
☐	Paint Striping - first stripe		$ 1,329
☐	Paint Striping - each additional stripe		$ 742
☐	Metallic Paint		$ 7,210
☐	Clear coat Finish		$ 1,844
☐	Anti-Graffiti Clear coat Finish		$ 2,652
☐	Prime Paint Only - deduct		$ (1,220)
☐	Heil ASL CleanShield™ by BrandArmor™" Hopper Side Protector		$ 1,535
TOTALS			
	Total from Options Above (MSRP)		$ -
	Additional Options (Custom's, Chassis Mods, Etc.) Total		$ -
	Subtotal		$ -
	Dealer Discount (%)	0%	$ -
	Dealer Net Price		$ -
	Surcharge if applicable		$ -
	Additional Discount (SPR)		$ -
	Freight		$ -
	Total Price per Unit		$ -

Return to Index Page

DuraPack® Rapid Rail®

High-Performance Automated Side Loader

Paint Stripe and Accessory Requirements

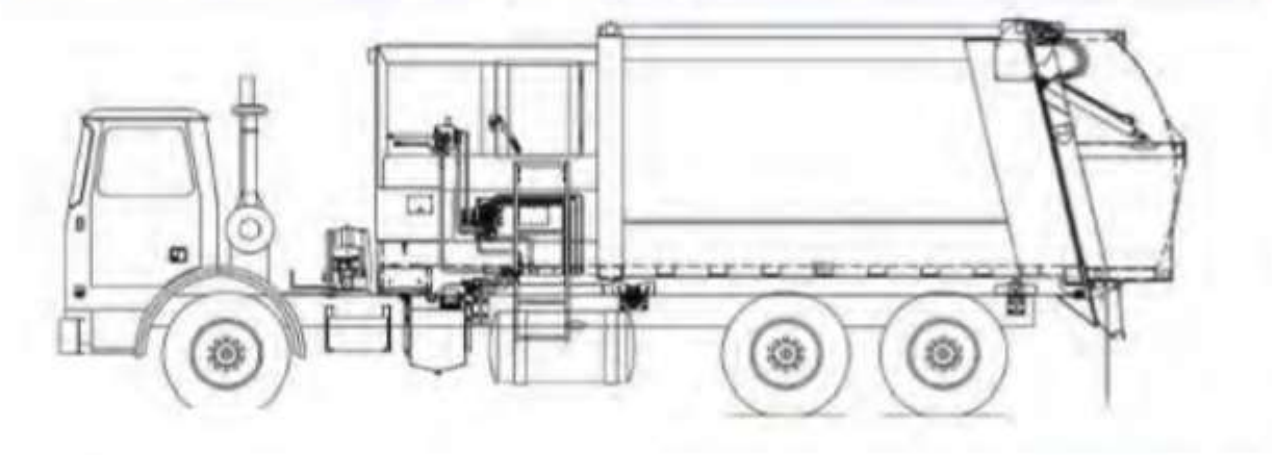

PAINT AND OPTIONS LAYOUT DETAIL
USE THIS FORM TO DESCRIBE PAINT SCHEMES
BE SPECIFIC ABOUT DIMENSIONS AND DETAILS

Sales Order #		Submitted by	
Customer			
Paint Color 1			
Paint Color 2			
Paint Color 3			
Chassis Make			
Chassis Model			
Wheelbase			
Body Size		Approved by	

DuraPack® Python®

High-Performance Automated Side Loader

Standard Equipment Features included in Base Price

- 5.2 yd3 hopper
- 108 in. lift reach
- Python Lift - 2-year limited structural warranty
- Lift capacity up to 800 lbs.
- Street side access door with step and grab (includes Interlocks)
- Under hopper liquid sump with 2 clean-out doors and steel rake
- Body service props for service hoist models
- Tailgate service props
- Fully automatic Shur-Lock™ tailgate locks
- O.I.G.A.I. front mount tandem vane pump system
- Cushioned up and down with chrome-plated rods
- Chassis frame-mounted oil tank with level/temperature gauge and oil suction shut-off valve
- 3-micron return line filter with magnetic trap and in-cab filter bypass monitor
- 100-micron suction line strainer
- Abrasion resistant hydraulic hoses
- In-cab packing controls, electric/air
- In-cab lift controls, air/electric, joystick
- In-cab controls for eject models, electric/air
- In-cab tailgate controls, air
- Cortex Controller™ with InSight™ diagnostic display and standard lift cycle counter
- Severe Duty Packer wear bar kit -Hopper only
- Safety triangle
- In-cab function and indicator lights
- Select-O-Pack
- AutoLift™
- Arm rest
- Lift reach warning
- Backup alarm
- Backup and license plate lights
- LED Center mounted brake light
- LED Duplicate high and low mount stop, turn, and tail lights
- LED Mid-body turn signals
- LED FMVSS #108 clearance lights and reflectors
- ICC reflective tape
- Rear mud flaps - anti-sail/anti-splash
- Rear underride guard
- Rear camera bracket and flood lights - reverse activated
- Body undercoating
- Customer’s choice of one color finish paint from Color Smart brochure
- Standard 1-year (2,000 hours of operation) warranty
- ANSI Z 245.1-2012 compliant
- Cavity coat and joint sealer
- Remote packer lube kit
- 5 lb. in-cab fire extinguisher

Return to Index Page

2020 DuraPack® Python® High-Performance Automated Side Loader - Sales Order Form			
Base Units DuraPack® Python® High-Performance Automated Side Loader			
☐	22 cubic yard - CNrG Tailgate Not Available With This Body Size		$ 122,473
☐	24 cubic yard - CNrG Tailgate Not Available With This Body Size		$ 123,553
☐	26 cubic yard - CNrG Tailgate Reduces Tailgate Capacity by **2** Cubic Yards - **24 Cubic Yard Unit With CNrG**		$ 125,684
☐	28 cubic yard - CNrG Tailgate Reduces Tailgate Capacity by **2** Cubic Yards - **26 Cubic Yard Unit With CNrG**		$ 126,765
☐	33 cubic yard - CNrG Tailgate Reduces Tailgate Capacity by **2** Cubic Yards - **31 Cubic Yard Unit With CNrG**		$ 129,962
☐	EJECT		STD
☐	Service Hoist Kit		$ 4,656
☐	Serviceable Eject		$ 2,451
Hopper Size			5.2 yd³
CHASSIS MUST COMFORM WITH HEIL'S MOST CURRENT CHASSIS SPECIFICATIONS AT WWW.HEIL.COM			
Mounting Options			
☐	Full Factory Mount for Service Hoist, Eject Models, and Serviceable Eject		$ 5,840
☐	Mount at Dealer Destination		$ 783
Grabber and Lift Options			
☐	TriCuff Grabber - handles a variety of 30 to 110 gallon square, rectangular and round semi-automated and automated barrels		$ 1,396
☐	TriCuff Grip Rite Grabber - handles a variety of 30 to 110 gallon square, rectangular and round semi-automated and automated barrels. No Spring Tensioner		$ 1,667
☐	Belt Grabbers with Spring Loaded Inner Arm - to accommodate 60/90 gallon round automated barrels		$ 1,396
☐	Universal Belt Grabbers with Spring Loaded Inner Arm - to accommodate 90 - 300 gallon round automated barrels		$ 1,396
☐	Changeable Spring Steel Grabbers - for 60 and 90 gallon round automated barrels with 26" - 27" grab diameter		$ 1,396
☐	Changeable Spring Steel Grabbers - for 300 * gallon round automated barrels with 41" - 43" grab diameter		$ 1,396
☐	Grabber Interlock Kit - prevents lift raise with grabbers in open position and grabbers opening in the lift raised position		$ 1,267
☐	Grabber storage bracket supplied at no charge when any TWO sets of spring steel grabbers are ordered		$ -
Power Take Off / Pump Options			
☐	Operate-in-gear-at-idle (OIGAI) Front Mount Tandem Vane Pump		STD
☐	Operate-in-gear-at-idle (OIGAI) Remote Mount Tandem Vane Pump with Transmission Driven, Constant Duty PTO		$ 3,131
☐	Clutch Shift - Extended Shaft PTO with Single Vane Pump		$ 4,300
☐	Constant Drive - Extended Shaft PTO with Single Vane Pump		$ 4,300
Lighting and Electrical Accessories			
☐	Hopper and Lift Work Light Kit - LED - two lights - One Mounted in the Hopper and mounted under body facing the grabber		$ 390
☐	Hopper Work Light Kit Only		$ 390
☐	Multi-Function LED Strobe / Turn Lamps		$ 649
☐	Body Side Backing Assist Lights mounted front body bolster - reverse activated		$ 536
☐	Strobe Light, Amber - in-cab switch, pump on, and reverse activated - mounted lower tailgate		$ 711
☐	Dual Oval Flat LED Strobes - in-cab switch - mounted mid-tailgate		$ 1,123
☐	Dual Oval Flat LED Strobes - in-cab switch, pump on, and reverse activated - mounted mid-tailgate		$ 1,123
☐	Dual Front Oval LED Strobes		$ 819
☐	Strobe Light, Amber - in-cab switch - mounted on cab		$ 711
☐	Whelen Strobe Lights Kit		$ 3,750
Lift Controls, Options and Accessories			
☐	Lift Cycle Counter In Addition to the Counter Provided with the Standard In Sight Display		$ 685
☐	Remote Lift Controls - mounted under seat on right hand side*		$ 1,638
☐	Additional Joystick Control for Lift - mounted in-cab		$ 1,895
Body Options			
☐	Retainer Teeth in Body		$ 1,354
☐	Hopper and Body Floor Liner (3/16" - 150,000 psi)		$ 1,463
☐	1/4" AR400 Body Floor in lieu of standard 3/16" AR400		$ 1,360
☐	3" Hopper Drain Valve		$ 366
☐	Mud Guards - steel - mounted ahead of tires		$ 350
☐	Mud Flaps - anti-sail / anti-splash - ahead of rear tires		$ 242
☐	Hopper Hood		$ 2,096
☐	Manual Hopper Cover - Standard Cover - mesh expanded metal with extended handle accessible from ground		$ 1,288
☐	Manual Hopper Cover for use with Hopper Hood		$ 1,288
☐	Hydraulic Sliding Top Door with Lift Interlock and indicator light in cab - Not available for if hopper hood if selected		$ 7,086
☐	Single Cary Holder - mounted on tailgate for transporting empty carts - Not Available with CNrG Tailgate CNG System		$ 125
☐	Triple Cart Holder - mounted on tailgate for transporting empty carts - Not Available with CNrG Tailgate CNG System		$ 386
☐	20 lb. Fire Extinguisher with Bracket		$ 530
☐	Dual 20 lb. Fire Extinguishers with Bracket		$ 1,056
☐	Tool Box (18" x 18" x 36") - frame mounted - available on Eject Models Only		$ 860
☐	Tool Box (18" x 18" x 24") - frame mounted - available on Eject Models Only		$ 814
☐	Tool Box (18" x 18" x 24") - bumper mounted		$ 814
☐	Hydraulic Pressure Gauge Kit (shipped loose in cab)		$ 324
☐	Hydraulic Oil Tank Heater - 500 watts		$ 1,262
☐	Hydraulic Tank Low Oil Level Warning Kit		$ 1,154
☐	Dual High Pressure Filter Kit		$ 1,906
☐	Rear Caution Decal		$ 304
☐	Return Line Check Valve Kit		$ 536
☐	Broom and Shovel Kit - Mounted Underbody - Includes Broom and Shovel		$ 227
☐	Hydraulic Oil Tank Quick Disconnect Kit - For use with filter buggy		$ 865
☐	Spill Kit		$ 474
☐	Fender Extension Kit		$ 773
☐	Sump Chutes		$ 494
☐	Tapered Roof Kit - Only Available in 28 cubic yard units - Helps reduce trash from blowing out		$ 1,586
☐	Low Profile Shur Lock Tailgate Locks MUST be used with Tag Axle Applications - Does not have T/G closed indicator flag		$ 386
☐	Infinity Series Packer/Eject Cylinders with scrapers and hardened rods to 50 HRC - Includes Five (5) Year Packer/Eject Cylinder Only Warranty that covers dents and dings (This Option is Required if purchasing extended warranty's below)		$ 3,245
Note: Hopper hood may not be ordered in conjunction with a sliding top door			

2020 DuraPack® Python® High-Performance Automated Side Loader - Sales Order Form			
CNrG Tailgate Mounted CNG - Includes Installation Fee - Reduces Yardage Capacity 2 Cubic Yards			
☐	60 DGE CNG System -		$ 42,889
☐	75 DGE CNG System -		$ 44,676
☐	90 DGE CNG System -		$ 50,784
CNrG Options			
☐	Front Bumper Fill with Kill Cap		$ 1,329
☐	Remote Fill, StreetSide Rear Fill Port		$ 2,318
☐	Remote Fill, Curbside Rear Fill Port		$ 2,318
☐	Defuel Transfer Hose - 35 ft.		$ 2,034
AWTI ™ Radar Systems			
☐	AWTI™ Radar System used in conjunction with 3rd Eye Cameras - Must Select Camera from 3rd Eye Camera Options		$ 2,359
3rd Eye® Camera Systems & 3rd® Eye Digital			
Note: Camera systems will accommodate a maximum of 6 cameras, not including driver and forward facing cameras included in 3rd Eye® Digital system			
☐	Base 3rd Eye® Single Camera System with monitor and Single Camera Mounted on Tailgate		$ 2,148
☐	Upgraded Base 3rd Eye® Dual Camera System with 9" monitor which includes digital grabber guidelines, Dual Cameras, One mounted Rear View and one Grabber Camera Mounted On The Side Of The Hopper. This Kit Also Includes the Integrated grabber work light kit. Hopper work light not included and must be ordered from the electrical options is needed.		$ 4,250
☐	Add on 3rd Eye® Camera (LH Cab) - Camera System Price Adder **(Only available if base camera is selected)**		$ 572
☐	Add on 3rd Eye® Camera (RH Cab) - Camera System Price Adder **(Only available if base camera is selected)**		$ 572
☐	Add on 3rd Eye® Camera (LH Alley) - Camera System Price Adder **(Only available if base camera is selected)**		$ 572
☐	Add on 3rd Eye® Camera (RH Alley) - Camera System Price Adder **(Only available if base camera is selected)**		$ 572
☐	Add on 3rd Eye® Camera (Hopper) - Camera System Price Adder **(Only available if base camera is selected)**		$ 572
☐	Add on 3rd Eye® Camera (Grabber) (Mounted Under Body) - Camera System Price Adder **(Only available if base camera is selected)**(Not Available with Upgraded Base Kit)		$ 572
☐	3rd Eye® Digital System: Includes (Driver and Forward Facing Camera (Window Unit), and Gateway - (In-Cab Monitor Not Included) - *Digital monitoring service not included and must be purchased and activated though 3rd Eye post delivery *		$ 3,317
Load Cell Scale Systems			
☐	Heil Optimum Payload System (HOPS) using Air-Weigh Axle Scales		$ 9,275
☐	Air-Weigh™ Axle Scale System without Interlock		$ 8,652
Auxiliary Axles and Tires			
* NOTE: All axles MUST BE installed with tires so chassis can be re-certified to new GAWR and GVWR ratings. Tag Axle applications will automatically receive the low profile Shur Lock tailgate lock kit at the price listed below.			
Hendrickson™ Options			
☐	Hendrickson™ Pusher Axle-13,000 pound capacity, non Steer - Narrow Track		$ 12,360
* Note: All auxiliary applications must be approved by Heil prior to order acceptance			
Auxiliary Axle Tire Options			
☐	255/70R-22.5 - load range H, 5,510 pound single max load at 120 psi with rim - 2 tires installed		$ 2,379
☐	275/70R-22.5 - load range H, 7,000 pound single max load at 120 psi with rim - 2 tires installed		$ 3,008
☐	Upgrade to Polished Aluminum Wheels (Set of Two)		$ 1,545
☐	Low profile Shur Lock tailgate lock kit.		$ 386
CNG Installation - Top of Body Installation			
☐	CNG Installation Charge - Includes brackets, hardware, and mounting of CNG system		$ 5,969
Extended Complete Body Warranty Options			
☐	Two (2) Year (Months 13-24) (Maximum 4,000 hrs. of Operation) Complete Heil Body Warranty Requires additional purchase of Infinity packer/eject cylinders from above		$ 2,802
☐	Three (3) Year (Months 13-36) (Maximum 6,000 hrs. of Operation) Complete Heil Body & Lift Warranty Requires additional purchase of Infinity packer/eject cylinders from above		$ 8,698
☐	Four (4) Year (Months 13-48) (Maximum 8,000 hrs. of Operation) Complete Heil Body & Lift Warranty Requires additional purchase of Infinity packer/eject cylinders from above		$ 13,004
☐	Five (5) Year (Months 13-60) (Maximum 10,000 hrs. of Operation) Complete Heil Body & Lift Warranty Requires additional purchase of Infinity packer/eject cylinders from above		$ 17,350
Extended Cylinder Warranty Options			
☐	Two (2) Year (Months 13-24) (Maximum 4,000 hrs. of Operation) All other Non-Infinity Cylinder Warranty - Requires additional purchase of Infinity packer/eject cylinders from above		$ 3,502
☐	Three (3) Year (Months 13-36) (Maximum 6,000 hrs. of Operation) All other Non-Infinity Cylinder Warranty - Requires additional purchase of Infinity packer/eject cylinders from above		$ 6,190
☐	Four (4) Year (Months 13-48) (Maximum 8,000 hrs. of Operation) All other Non-Infinity Cylinder Warranty - Requires additional purchase of Infinity packer/eject cylinders from above		$ 9,260
☐	Five (5) Year (Maximum 10,000 hrs. of Operation) All other Non-Infinity Cylinder Warranty - Requires purchase of Infinity packer or eject Cylinders from above		$ 11,827
Extended Hydraulic Pump and Valve Warranty Options			
☐	Two (2) Year (Months 13-24) (Maximum 4,000 hours of operation) Hydraulic Pump and Valve warranty *Not needed if purchasing extended complete body warranty*		$ 3,502
☐	Three (3) Year (Months 13-36) (Maximum 6,000 hours of operation) Hydraulic Pump and Valve warranty *Not needed if purchasing extended complete body warranty*		$ 6,190
☐	Four (4) Year (Months 13-48) (Maximum 8,000 hours of operation) Hydraulic Pump and Valve warranty *Not needed if purchasing extended complete body warranty*		$ 9,260
☐	Five (5) Year (Months 13-60) (Maximum 10,000 hours of operation) Hydraulic Pump and Valve warranty *Not needed if purchasing extended complete body warranty*		$ 11,827
Paint Options			
NOTE: LIST PAINT CODES ON PAINT DIAGRAM			
☐	Customized Paint Color - Paint Color Code NOT included in the Color Smart Brochure		$ 417
☐	Customized Lift Paint - Any color other than Visibility Yellow (Standard)		$ 345
☐	Two Tone Paint		$ 1,576
☐	Paint Striping - first stripe		$ 1,329
☐	Paint Striping - each additional stripe		$ 742
☐	Metallic Paint		$ 7,210
☐	Clear coat Finish		$ 1,844
☐	Anti-Graffiti Clear coat Finish		$ 2,652
☐	Prime Paint Only - deduct		$ (1,220)
☐	Heil ASL CleanShield™ by BrandArmor™" Hopper Side Protector		$ 1,535
TOTALS			
	Total from Options Above (MSRP)		$ -
	Additional Options (Custom's, Chassis Mods, Etc.) Total		$ -
	Surcharge if applicable		$ -
	Subtotal		$ -
	Dealer Discount (%)	0%	$ -
	Dealer Net Price		$ -
	Additional Discount (SPR)		
	Freight		
	Total Price per Unit		$ -

Return to Index Page

DuraPack® Python®

High-Performance Automated Side Loader

Paint Stripe and Accessory Requirements

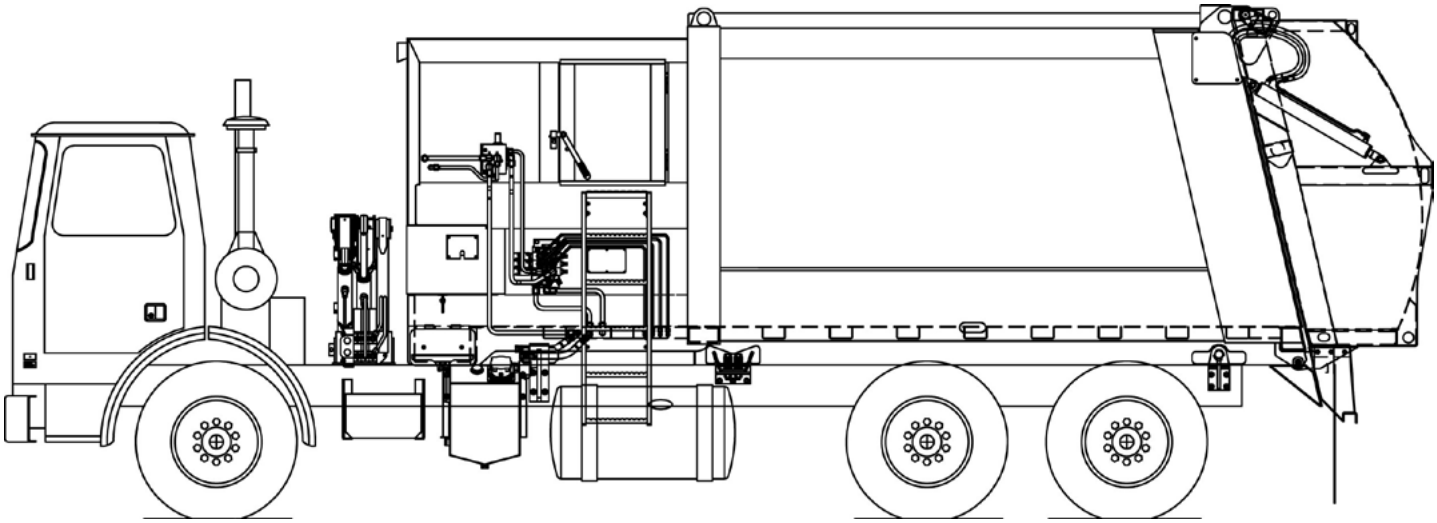

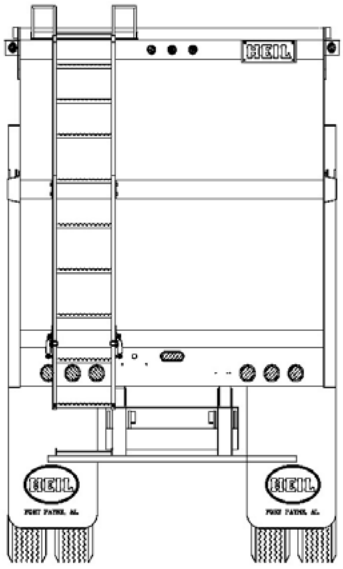

Paint and options layout detail
Use this form to describe paint schemes
Be specific about dimensions and details

Sales Order #		Submitted by	
Customer			
Paint Color 1			
Paint Color 2			
Paint Color 3			
Chassis Make			
Chassis Model			
Wheelbase			
Body Size		Approved by	

Liberty

Continuous-Pack Automated Side Loader

Standard Equipment Features included in Base Price

- Python Lift - 2-year limited structural warranty
- Lift capacity up to 800 lbs.
- Body service props
- Tailgate service props
- Fully automatic tailgate locks
- Grease zerks - for entire system only
- O.I.G.A.I. Front mount front mount tandem vane pump system
- Cushioned up and down with chrome-plated rods
- Chassis frame mounted oil tank with level/temperature gauge and oil suction shut-off valve
- 3-micron return line filter with magnetic trap and in-cab filter bypass monitor - in microns
- 100-micron suction line strainer
- Abrasion resistant hydraulic hoses
- In-cab packing controls, electric
- In-cab lift controls, air/electric, Joystick
- In-cab hoist controls, electric
- In-cab tailgate controls, electric
- In-cab function and indicator lights
- Cortex Controller ™ with InSight™ diagnostic display and Standard Lift Cycle Counter
- Observation Ladder
- Heavy duty packer paddle with liquid containment shaft seals
- Lift reach warning
- Backup alarm
- Backup and license plate lights
- LED Center-mounted brake light
- LED Duplicate high and low mount stop, turn, and tail lights
- LED Mid-body turn signals
- LED FMVSS #108 clearance lights and reflectors
- ICC reflective tape
- Rear mud flaps - anti-sail/anti-splash
- Rear under ride guard
- Rear camera bracket and flood lights - reverse activated
- Customer’s choice of one color finish paint from Color Smart brochure
- Standard 1-year (2,000 hours of operation) warranty
- ANSI Z 245.1-2017 compliant
- Cavity coat and joint sealer
- Inside-body front closure
- Outside mounted upper packer lube line
- 5 lb. in-cab fire extinguisher
- Safety triangle

Return to Index Page

2020 Liberty Continuous-Pack Automated Side Loader - Sales Order Form			
Base Units Liberty Continuous-Pack Automated Side Loader - DUMP ONLY			
☐	16 cubic yard		$ 115,887
☐	20 cubic yard		$ 118,157
☐	22 cubic yard		$ 119,341
☐	24 cubic yard		$ 120,412
☐	26 cubic yard		$ 121,555
☐	30 cubic yard		$ 123,815
☐	32 cubic yard		$ 124,968
CHASSIS MUST COMFORM WITH HEIL'S MOST CURRENT CHASSIS SPECIFICATIONS AT WWW.HEIL.COM			
Mounting Options			
☐	Full Factory Mount for Dump Models		$ 6,278
☐	Mount at Dealer Destination		$ 783
Grabber and Lift Options			
☐	TriCuff Grabber - handles a variety of 30 to 110 gallon square, rectangular and round semi-automated and automated barrels		$ 1,396
☐	TriCuff Grip Rite Grabber - handles a variety of 30 to 110 gallon square, rectangular and round semi-automated and automated barrels. No Spring Tensioner		$ 1,560
☐	Belt Grabbers with Spring Loaded Inner Arm - to accommodate 60/90 gallon round automated barrels		$ 1,396
☐	Universal Belt Grabbers with Spring Loaded Inner Arm - to accommodate 90 - 300 * gallon round automated barrels		$ 1,396
☐	Changeable Spring Steel Grabbers - for 60 and 90 gallon round automated barrels with 26" - 27" grab diameter		$ 1,396
Power Take Off / Pump Options			
☐	Operate-in-gear-at-idle (OIGAI) Front Mount Tandem Vane Pump		STD
☐	Operate-in-gear-at-idle (OIGAI) Remote Mount Tandem Vane Pump with Transmission Driven, Constant Duty PTO		$ 3,131
☐	Clutch Shift - Extended Shaft PTO with Single Vane Pump		$ 4,300
☐	Constant Drive - Extended Shaft PTO with Single Vane Pump		$ 4,300
Lighting and Electrical Accessories			
☐	Hopper and Lift Work Light Kit - in-cab switch		$ 780
☐	Multi-Function LED Strobe / Turn Lamps		$ 649
☐	Body Side Backing Assist Lights - reverse activated		$ 536
☐	Dual Flashing 7" Amber LED Lights on Tailgate - mounted top		$ 1,123
☐	Strobe Light, Amber - in-cab switch - mounted mid-tailgate		$ 711
☐	Strobe Light, Amber - in-cab switch, pump on, and reverse activated - mounted mid-tailgate		$ 711
☐	Dual Strobe Lights, Amber - in-cab switch - mounted mid-tailgate		$ 1,025
Lift Controls, Options and Accessories			
☐	Lift Cycle Counter		$ 685
☐	Remote Lift Controls - mounted under seat on right hand side		$ 1,638
Body Options			
☐	Reinforced Tailgate Hinge		$ 541
☐	Heavy Duty Overlay Package - hopper, floor and sides, 48" into body (3/16" - 100,000 psi)		$ 3,466
☐	3" Hopper Drain Valve		$ 366
☐	Mud Guards - steel - mounted ahead of rear tires		$ 350
☐	Mud Flaps - anti-sail / anti-splash - ahead of rear tires		$ 242
☐	Manual Hopper Cover - mesh expanded metal		$ 1,288
☐	Pneumatic Hopper Cover		$ 4,470
☐	Rear Fenders for Single Rear Tire		$ 711
☐	Rear Fenders for Tandem Rear Tires		$ 1,190
☐	Continuously Welded Body Interior		$ 427
☐	20 lb. Fire Extinguisher with Bracket		$ 530
☐	Tool Box (18" x 18" x 36") - frame mounted - available on 30 and 32 yard bodies ONLY		$ 860
☐	Tool Box (18" x 18" x 24") - frame mounted - available on 24, 26, 30, and 32 yard bodies ONLY		$ 814
☐	Tool Box (18" x 18" x 24") - bumper mounted - available on 22, 26, 30 and 32 yard bodies ONLY		$ 814
☐	Hydraulic Pressure Gauge Kit (shipped loose in cab)		$ 324
☐	Hydraulic Oil Tank Heater - 500 watts		$ 1,262
☐	Oil Temperature Gauge Kit		$ 711
☐	Dual High Pressure Filter Kit		$ 1,906
☐	Rear Caution Decal		$ 304
☐	Extended Tailgate Seal		$ 386
☐	Remote Lubrication System with Manifold for Packer		STD
☐	Broom & Shovel Rack Located on the street side hopper		$ 309
☐	Sign Frame - J-Channel - 36" x 48"		$ 407
☐	Sign Frame - J-Channel - 36" x 72"		$ 484
☐	Sign Frame - J-Channel - 48" x 72" - not available on 16 and 20 yd. bodies		$ 515
☐	Sign Frame - Roadway - 31.5" x 95.5" - only available on 30 and 32 yd. bodies		$ 2,230
☐	Sign Frame - Structural Channel - 48" x 96" - only available on 30 and 32 yd. bodies		$ 649
☐	Rear Tow Hooks		$ 474
☐	Spill Kit		$ 474
☐	Hydraulic Oil Tank Quick Disconnect Kit - For use with filter buggy		$ 865
☐	Hydraulic Tank Low Oil Level Warning Kit		$ 1,154
Camera Systems			
All camera systems are mounted with protective camera brackets and twin tailgate flood lights			
CAMERA MONITOR LOCATION WILL BE CAB ROOF MOUNTED			
Swivel monitor bracket will be provided for dual drive chassis			
3rd Eye® Camera Systems & 3rd® Eye Digital			
Note: Camera systems will accommodate a maximum of 6 cameras, not including driver and forward facing cameras included in 3rd Eye® Digital system			
☐	Base 3rd Eye® Single Camera System with monitor and Single Camera Mounted on Tailgate		$ 2,148
☐	Add on 3rd Eye® Camera (LH Cab) - Camera System Price Adder **(Only available if base camera is selected)**		$ 572
☐	Add on 3rd Eye® Camera (RH Cab) - Camera System Price Adder **(Only available if base camera is selected)**		$ 572
☐	Add on 3rd Eye® Camera (LH Alley) - Camera System Price Adder **(Only available if base camera is selected)**		$ 572
☐	Add on 3rd Eye® Camera (RH Alley) - Camera System Price Adder **(Only available if base camera is selected)**		$ 572
☐	Add on 3rd Eye® Camera (Hopper) - Camera System Price Adder **(Only available if base camera is selected)**		$ 572
☐	Add on 3rd Eye® Camera (Grabber) - Camera System Price Adder **(Only available if base camera is selected)**		$ 572
☐	3rd Eye® Digital System: Includes (Driver and Forward Facing Camera (Window Unit), and Gateway - (In-Cab Monitor Not Included) - *Digital monitoring service not included and must be purchased and activated though 3rd Eye post delivery *		$ 3,317

2020 Liberty Continuous-Pack Automated Side Loader - Sales Order Form			
AWTI™ Radar Systems			
☐	AWTI™ Radar System used in conjunction with 3rd Eye Cameras - Must Select Camera from above 3rd Eye Camera Options		$ 2,359
	* Other radar systems may be available via Custom Option Request *		
Load Cell Scale Systems			
☐	Heil Optimum Payload System (HOPS) using Air-Weigh Axle Scales		$ 9,275
☐	Air-Weigh™ Axle Scale System without Interlock		$ 8,652
Auxiliary Axles and Tires			
* NOTE: All axles MUST BE installed with tires so chassis can be re-certified to new GAWR and GVWR ratings			
☐	Watson & Chalin™ Self Steering Axle: 13,500 pound capacity, hub piloted or 20" spoke wheel hubs, automatic slack adjusters, type 16 air chambers, steering stabilizer kit and reverse lift kit - for pusher applications		$ 11,958
☐	Watson & Chalin™ Rigid Axle: 25,000 pound capacity, hub piloted or 20" spoke wheel hubs, 30/30 brake chambers, automatic slack adjusters, 1,300 cubic inch air tank and regulator kit - for pusher applications		$ 15,017
☐	Tag Axle Spill Shield - Prevents debris from collecting on the tag axle - If applicable with body chassis combination		$ 330
Hendrickson™ Options			
☐	Hendrickson™ Pusher Axle-13.500 pound capacity, Steerable		$ 12,360
☐	Hendrickson™ Steerable Pusher Axle: 20,000 pound capacity		$ 15,229
* Note: All auxiliary applications must be approved by Heil prior to order acceptance			
Auxiliary Axle Tire Options			
☐	255/70R-22.5 - load range H, 5,510 pound single max load at 120 psi with rim - 2 tires installed		$ 2,379
☐	275/70R-22.5 - load range H, 7,000 pound single max load at 120 psi with rim - 2 tires installed		$ 3,008
☐	Upgrade to Polished Aluminum Wheels (Set of Two)		$ 1,545
CNG Installation - Top of Body Installation			
☐	CNG Installation Charge - Includes brackets, hardware, and mounting of CNG system		$ 5,969
Extended Complete Body Warranty Options			
☐	Two (2) Year (Months 13-24) (Maximum 4,000 hrs. of Operation) Complete Heil Body Warranty		$ 2,802
☐	Three (3) Year (Months 13-36) (Maximum 6,000 hrs. of Operation) Complete Heil Body Warranty		$ 8,698
☐	Four (4) Year (Months 13-48) (Maximum 8,000 hrs. of Operation) Complete Heil Body Warranty		$ 13,004
☐	Five (5) Year (Months 13-60) (Maximum 10,000 hrs. of Operation) Complete Heil Body Warranty		$ 17,356
Extended Cylinder Warranty Options			
☐	Two (2) Year (Months 13-24) (Maximum 4,000 hrs. of Operation) All Cylinder Warranty -		$ 3,131
☐	Three (3) Year (Months 13-36) (Maximum 6,000 hrs. of Operation) All Cylinder Warranty -		$ 6,190
☐	Four (4) Year (Months 13-48) (Maximum 8,000 hrs. of Operation) All Cylinder Warranty -		$ 9,260
☐	Five (5) Year) (Months 13-60) (Maximum 10,000 hrs. of Operation) All Cylinder Warranty-		$ 11,827
Extended Hydraulic Pump and Valve Warranty Options			
☐	Two (2) Year (Months 13-24) (Maximum 4,000 hours of operation) Hydraulic Pump and Valve warranty *Not needed if purchasing extended complete body warranty*		$ 3,131
☐	Three (3) Year (Months 13-36) (Maximum 6,000 hours of operation) Hydraulic Pump and Valve warranty *Not needed if purchasing extended complete body warranty*		$ 6,190
☐	Four (4) Year (Months 13-48) (Maximum 8,000 hours of operation) Hydraulic Pump and Valve warranty *Not needed if purchasing extended complete body warranty*		$ 9,260
☐	Five (5) Year (Months 13-60) (Maximum 10,000 hours of operation) Hydraulic Pump and Valve warranty *Not needed if purchasing extended complete body warranty*		$ 11,827
Paint Options			
NOTE: LIST PAINT CODES ON PAINT DIAGRAM			
☐	Customized Paint Color - Paint Color Code NOT included in the Color Smart Brochure		$ 417
☐	Customized Lift Paint - Any color other than Visibility Yellow (Standard)		$ 345
☐	Two Tone Paint		$ 1,576
☐	Paint Striping - first stripe		$ 1,329
☐	Paint Striping - each additional stripe		$ 742
☐	Metallic Paint		$ 7,210
☐	Clear coat Finish		$ 1,844
☐	Anti-Graffiti Clear coat Finish		$ 2,652
☐	Prime Paint Only - deduct		$ (1,220)
TOTALS			
	Total from Options Above (MSRP)		$ -
	Additional Options (Custom's, Chassis Mods, Etc.) Total		
	Subtotal		$ -
	Dealer Discount (%)		$ -
	Dealer Net Price		$ -
	Surcharge if applicable		
	Additional Discount (SPR)		
	Freight		
	Total Price per Unit		$ -

Return to Index Page

Liberty

Continuous-Pack Automated Side Loader

Paint Stripe and Accessory Requirements

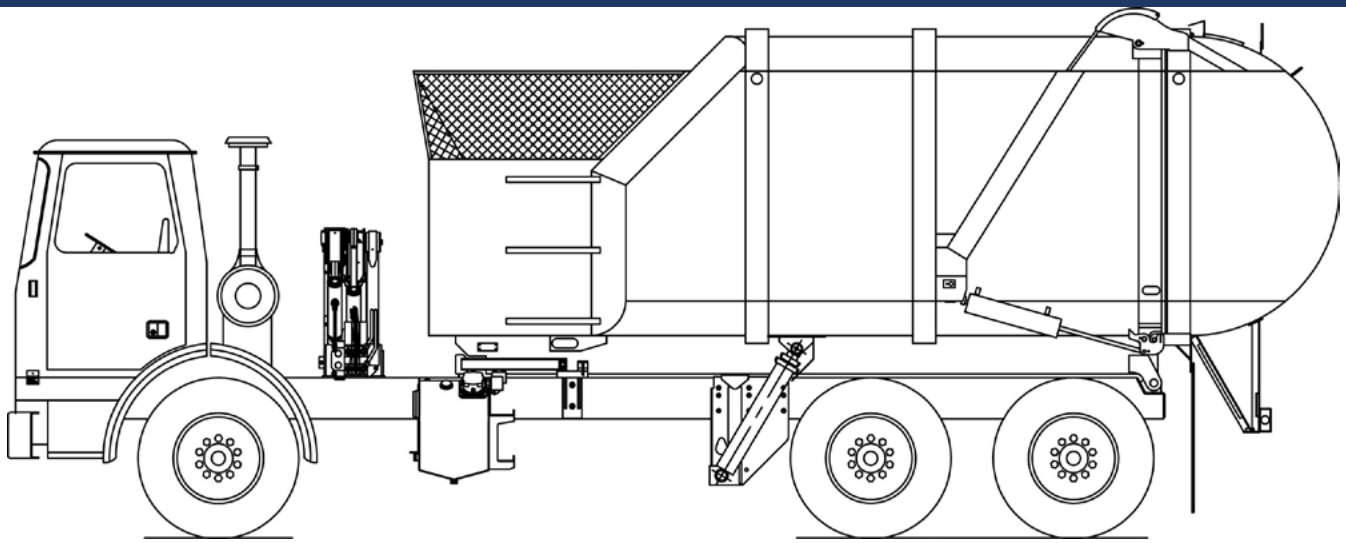

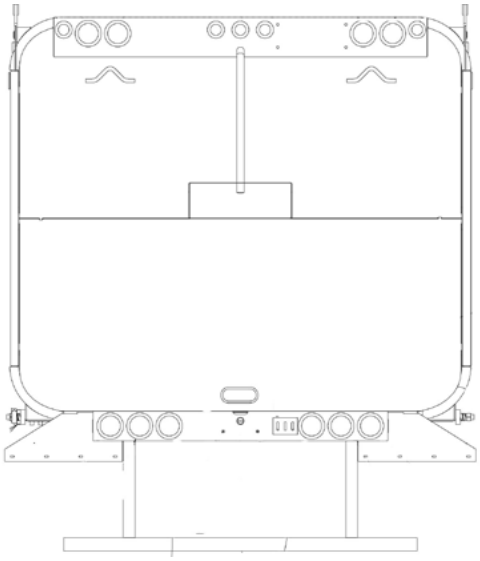

Paint and options layout detail
Use this form to describe paint schemes
Be specific about dimensions and details

Sales Order #		Submitted by	
Customer			
Paint Color 1			
Paint Color 2			
Paint Color 3			
Chassis Make			
Chassis Model			
Wheelbase			
Body Size		Approved by	

MultiPack®

High-Performance Rear / Automated Side Loader

Standard Equipment Features included in Base Price

- 3.94 yd3 rear hopper
- 5.2 yd3 front hopper
- 108 in. Lift reach
- Python Lift - 2-year limited structural warranty
- Lift capacity up to 800 lbs.
- DuraPack® 5000 tailgate
- Street side access door with step and grab handle
- Under hopper liquid sump with 2 clean-out doors and steel rake
- Tailgate service props
- Tailgate turnbuckle kit
- O.I.G.A.I. Front mount tandem vane pump system
- Cushioned up and down with chrome plated rods
- Chassis frame-mounted oil tank with level/temperature gauge and oil suction shut-off valve
- 3-micron return line filter with magnetic trap & in-cab filter bypass monitor
- 100-micron suction line strainer
- Abrasion resistant hydraulic hoses
- In-cab packing controls, electric/air
- In-cab lift controls, air/electric, joystick
- In-cab eject controls, electric/air
- In-cab tailgate controls, air
- Remote Packer Lube Kit
- RH Buzzer Kit
- Severe Duty Packer wear bar kit -Hopper only
- Cortex Controller™ with InSight™ diagnostic display
- In-cab function and indicator lights
- Select-O-Pack
- AutoLift™
- Arm rest
- Lift reach warning
- Backup alarm
- Backup and license plate lights
- LED Center mounted brake light
- LED Duplicate high and low mount stop, turn, and tail lights
- LED Mid-body turn signals
- LED FMVSS #108 clearance lights and reflectors
- ICC reflective tape
- Rear under ride guard
- Rear camera bracket and flood lights - reverse activated
- Cavity coat and joint sealer
- Body undercoating
- Customer’s choice of one color finish paint from Color Smart brochure
- Standard 1-year (2,000 hours of operation) warranty
- ANSI Z 245.1-2017 compliant
- 5 lb. in-cab fire extinguisher

Return to Index Page

2020 MultiPack® High-Performance Rear Automated Side Loader - Sales Order Form			
Base Units MultiPack® High-Performance Rear Automated Side Loader			
☐	24 cubic yard		$ 167,506
	EJECT		
Hopper Size			5.2 yd³
CHASSIS MUST COMFORM WITH HEIL'S MOST CURRENT CHASSIS SPECIFICATIONS AT WWW.HEIL.COM			
Mounting Options			
☐	Full Factory Mount		$ 6,278
☐	Mount at Dealer Destination		$ 783
Grabber and Lift Options			
☐	TriCuff Grabber - handles a variety of 30 to 110 gallon square, rectangular and round semi-automated and automated barrels		$ 1,396
☐	TriCuff Grip Rite Grabber - handles a variety of 30 to 110 gallon square, rectangular and round semi-automated and automated barrels. No Spring Tensioner		$ 1,667
☐	Belt Grabbers with Spring Loaded Inner Arm - to accommodate 60/90 gallon round automated barrels		$ 1,396
☐	Universal Belt Grabbers with Spring Loaded Inner Arm - to accommodate 90 - 300 gallon round automated barrels		$ 1,396
☐	Changeable Spring Steel Grabbers - for 60 and 90 gallon round automated barrels with 26" - 27" grab diameter		$ 1,396
☐	Changeable Spring Steel Grabbers - for 300 gallon round automated barrels with 41" - 43" grab diameter		$ 1,396
☐	Grabber Interlock Kit - prevents lift raise with grabbers in open position and grabbers opening in the lift raised position		$ 1,267
Grabber storage bracket supplied at no charge when any TWO sets of spring steel grabbers are ordered			
Reduces hopper capacity by 1.2 yd3			
Power Take Off / Pump Options			
☐	Operate-in-gear-at-idle (OIGAI) Front Mount Vane Pump		STD
Lift Controls, Options and Accessories			
☐	Remote Lift Controls - air toggles - mounted under seat on right hand side		$ 1,638
☐	Additional Joystick Control for Lift - mounted in-cab		$ 1,895
Lighting and Electrical Accessories			
☐	Front Hopper and Lift Work Light Kit - two lights - in-cab switch		$ 773
☐	Tailgate Hopper Work Light Kit - in-cab switch		$ 376
☐	Multi-Function LED Strobe / Turn Lamps		$ 649
☐	Dual Work Lights Outside of Tailgate Hopper		$ 500
☐	Body Side Backing Assist Lights - reverse activated		$ 536
☐	Strobe Light, Amber - upper LH corner of tailgate - in-cab switch		$ 711
☐	Strobe Light, Amber - in-cab switch - Front of Body		$ 711
☐	Dual Front Oval LED Strobes		$ 819
☐	Left Hand Buzzer Kit		$ 180
Container Handling / Cart Tipper Options			
☐	12,000 Pound Line Pull Drum Winch with Control Kit *		$ 6,190
☐	15,000 lb. Line Pull Reeving Cylinder with Control Kit - non-recessed		$ 6,875
☐	Adjustable Roll Bar with Control Kit		$ 4,372
☐	Arm Mechanism with Control Kit		$ 6,195
All of the above mechanisms require the latch kit below			
Riding steps cannot be supplied with Arm Mechanism option			
☐	Lip and Latch Kit - with short sill extension - to suit application without cart tipper(s) - Can't be used with Roll Bar		$ 1,360
☐	Lip and Latch Kit - with 20°, 7 inch sill extension with cutouts for cart tippers		$ 1,741
	☐ Single Tipper Center Mounted ☐ Single Tipper Offset to Curbside ☐ Dual Tipper		
☐	Lip and Latch Kit - with 20°, 7 inch sill extension - to suit application without cart tipper(s) €		$ 1,741
€ Suitable for aftermarket install of cart tippers			
☐	Single Control Valve Section with Control Handle		$ 1,406
☐	Double Control Valve Section with Control Handles		$ 2,158
☐	Triple Control Valve Section with Control Handles		$ 3,425
☐	Single Cart Tipper Control Valve, Handle, Plumbing and Hose Kit		$ 2,106
☐	Dual Cart Tipper Control Valve, Handle, Plumbing and Hose Kit		$ 3,425
☐	Bayne Cart Tipper - Specify Model - Includes Controls, Valves, Plumbing, and Installation		See Bayne
☐	Customer Installed Single Cart Tipper Kit - Bayne Bracket, Control Valve, Handle, Plumbing and Hose Kit		$ 2,467
☐	Customer Installed Double Cart Tipper Kit - Bayne Bracket, Control Valve, Handle, Plumbing and Hose Kit		$ 3,780
CUSTOMER SUPPLIED CART TIPPERS ARE NOT ADMISSIBLE			
Body Options			
☐	Front Hopper and Body Floor Liner (3/16" - 150,000 psi)		$ 1,463
☐	3" Hopper Drain Valve		$ 366
☐	Mud Guards - steel - mounted ahead of rear tires		$ 350
☐	Mud Flaps - anti-sail / anti-splash - ahead of rear tires		$ 242
☐	Manual Hopper Cover - mesh expanded metal		$ 1,288
☐	Manual Hopper Cover for use with Hopper Hood		$ 1,288
☐	Hopper Hood - not available with 300 gallon grabbers		$ 2,096
☐	20 lb. Fire Extinguisher with Bracket		$ 530
☐	Dual 20 lb. Fire Extinguishers with Bracket		$ 1,056
☐	Tool Box (18" x 18" x 36") - frame mounted		$ 860
☐	Tool Box (18" x 18" x 24") - frame mounted		$ 814
☐	Hydraulic Pressure Gauge Kit (shipped loose in cab)		$ 324
☐	Hydraulic Oil Tank Heater - 500 watts		$ 1,262
☐	Hydraulic Tank Low Oil Level Warning Kit		$ 1,154
☐	Dual High Pressure Filter Kit		$ 1,906
☐	DP 5000 H.D. Contractors Package (includes 1/4" hopper floor, 3/16" hopper front face liner and tailgate spill troughs)		$ 1,602
☐	Tailgate Side Spill Troughs		$ 762
☐	Hydraulic Oil Tank Quick Disconnect Kit - For use with filter buggy		$ 865
☐	Spill Kit		$ 474
☐	Fender Extension Kit		$ 773
☐	Sump Chutes		$ 494
☐	Infinity Series Packer/Eject Cylinders with scrapers and hardened rods to 50 HRC - Includes Five (5) Year Packer/Eject Cylinder Only Warranty that covers dents and dings (This Option is Required if purchasing extended warranty's below)		$ 3,245
Note: Hopper hood may not be ordered in conjunction with a sliding top door			

2020 MultiPack® High-Performance Rear Automated Side Loader - Sales Order Form

Camera Systems			
All camera systems are mounted with protective camera brackets and twin tailgate flood lights			
CAMERA MONITOR LOCATION WILL BE CAB ROOF MOUNTED			
Swivel monitor bracket will be provided for dual drive chassis			
3rd Eye® Camera Systems & 3rd® Eye Digital			
Note: Camera systems will accommodate a maximum of 6 cameras, not including driver and forward facing cameras included in 3rd Eye Digital system			
☐	Base 3rd Eye® Single Camera System with monitor and Single Camera Mounted on Tailgate		$ 2,148
☐	Add on 3rd Eye® Camera (LH Cab) - Camera System Price Adder **(Only available if base camera is selected)**		$ 572
☐	Add on 3rd Eye® Camera (RH Cab) - Camera System Price Adder **(Only available if base camera is selected)**		$ 572
☐	Add on 3rd Eye® Camera (LH Alley) - Camera System Price Adder **(Only available if base camera is selected)**		$ 572
☐	Add on 3rd Eye® Camera (RH Alley) - Camera System Price Adder **(Only available if base camera is selected)**		$ 572
☐	Add on 3rd Eye® Camera (Hopper) - Camera System Price Adder **(Only available if base camera is selected)**		$ 572
☐	Add on 3rd Eye® Camera (Grabber) - Camera System Price Adder **(Only available if base camera is selected)**		$ 572
☐	3rd Eye® Digital System: Includes (Driver and Forward Facing Camera (Window Unit), and Gateway - (In-Cab Monitor Not Included) - *Digital monitoring service not included and must be purchased and activated though 3rd Eye post delivery *		$ 3,317
Load Cell Scale Systems			
☐	Heil Optimum Payload System (HOPS) using Air-Weigh Axle Scales		$ 9,275
☐	Air-Weigh™ Axle Scale System without Interlock		$ 8,652
Auxiliary Axles and Tires			
* NOTE: All axles MUST BE installed with tires so chassis can be re-certified to new GAWR and GVWR ratings			
☐	Watson & Chalin™ Rigid Axle: 25,000 pound capacity, hub piloted or 20" spoke wheel hubs, 30/30 brake chambers, automatic slack adjusters, 1,300 cubic inch air tank and regulator kit - for pusher applications		$ 15,017
Hendrickson™ Options			
☐	Hendrickson™ Steerable Pusher Axle: 20,000 pound capacity		$ 15,229
Auxiliary Axle Tire Options			
* Note: All auxiliary applications must be approved by Heil prior to order acceptance			
☐	255/70R-22.5 - load range H, 5,510 pound single max load at 120 psi with rim - 2 tires installed		$ 2,379
☐	275/70R-22.5 - load range H, 7,000 pound single max load at 120 psi with rim - 2 tires installed		$ 3,008
☐	Upgrade to Polished Aluminum Wheels (Set of Two)		$ 1,545
CNG Installation - Top of Body Installation			
☐	CNG Installation Charge - Includes brackets, hardware, and mounting of CNG system		$ 5,969
Extended Complete Body Warranty Options			
☐	Two (2) Year (Months 13-24) (Maximum 4,000 hrs. of Operation) Complete Heil Body Warranty Requires additional purchase of Infinity packer/eject cylinders from above		$ 2,802
☐	Three (3) Year (Months 13-36) (Maximum 6,000 hrs. of Operation) Complete Heil Body & Lift Warranty Requires additional purchase of Infinity packer/eject cylinders from above		$ 8,698
☐	Four (4) Year (Months 13-48) (Maximum 8,000 hrs. of Operation) Complete Heil Body & Lift Warranty Requires additional purchase of Infinity packer/eject cylinders from above		$ 13,004
☐	Five (5) Year (Months 13-60) (Maximum 10,000 hrs. of Operation) Complete Heil Body & Lift Warranty Requires additional purchase of Infinity packer/eject cylinders from above		$ 17,356
Extended Cylinder Warranty Options			
☐	Two (2) Year (Months 13-24) (Maximum 4,000 hrs. of Operation) All other Non-Infinity Cylinder Warranty - Requires additional purchase of Infinity packer/eject cylinders from above		$ 3,502
☐	Three (3) Year (Months 13-36) (Maximum 6,000 hrs. of Operation) All other Non-Infinity Cylinder Warranty - Requires additional purchase of Infinity packer/eject cylinders from above		$ 6,190
☐	Four (4) Year (Months 13-48) (Maximum 8,000 hrs. of Operation) All other Non-Infinity Cylinder Warranty - Requires additional purchase of Infinity packer/eject cylinders from above		$ 9,260
☐	Five (5) Year (Maximum 10,000 hrs. of Operation) All other Non-Infinity Cylinder Warranty - Requires purchase of Infinity packer or eject Cylinders from above		$ 11,827
Extended Hydraulic Pump and Valve Warranty Options			
☐	Two (2) Year (Months 13-24) (Maximum 4,000 hours of operation) Hydraulic Pump and Valve warranty *Not needed if purchasing extended complete body warranty*		$ 3,502
☐	Three (3) Year (Months 13-36) (Maximum 6,000 hours of operation) Hydraulic Pump and Valve warranty *Not needed if purchasing extended complete body warranty*		$ 6,190
☐	Four (4) Year (Months 13-48) (Maximum 8,000 hours of operation) Hydraulic Pump and Valve warranty *Not needed if purchasing extended complete body warranty*		$ 9,260
☐	Five (5) Year (Months 13-60) (Maximum 10,000 hours of operation) Hydraulic Pump and Valve warranty *Not needed if purchasing extended complete body warranty*		$ 11,827
Paint Options			
NOTE: LIST PAINT CODES ON PAINT DIAGRAM			
☐	Customized Paint Color - Paint Color Code NOT included in the Color Smart Brochure		$ 417
☐	Customized Lift Paint - Any color other than Visibility Yellow (Standard)		$ 345
☐	Two Tone Paint		$ 1,576
☐	Paint Striping - first stripe		$ 1,329
☐	Paint Striping - each additional stripe		$ 742
☐	Metallic Paint		$ 7,210
☐	Clear coat Finish		$ 1,844
☐	Anti-Graffiti Clear coat Finish		$ 2,652
☐	Prime Paint Only - deduct		$ (1,220)
TOTALS			
	Total from Options Above (MSRP)		**$ -**
	Additional Options (Custom's, Chassis Mods, Etc.) Total		
	Subtotal		**$ -**
	Dealer Discount (%)	**0%**	**$ -**
	Dealer Net Price		**$ -**
	Surcharge if applicable		
	Additional Discount (SPR)		
	Freight		
	Total Price per Unit		**$ -**

Return to Index Page

MultiPack®

High-Performance Rear / Automated Side Loader

Paint Stripe and Accessory Requirements

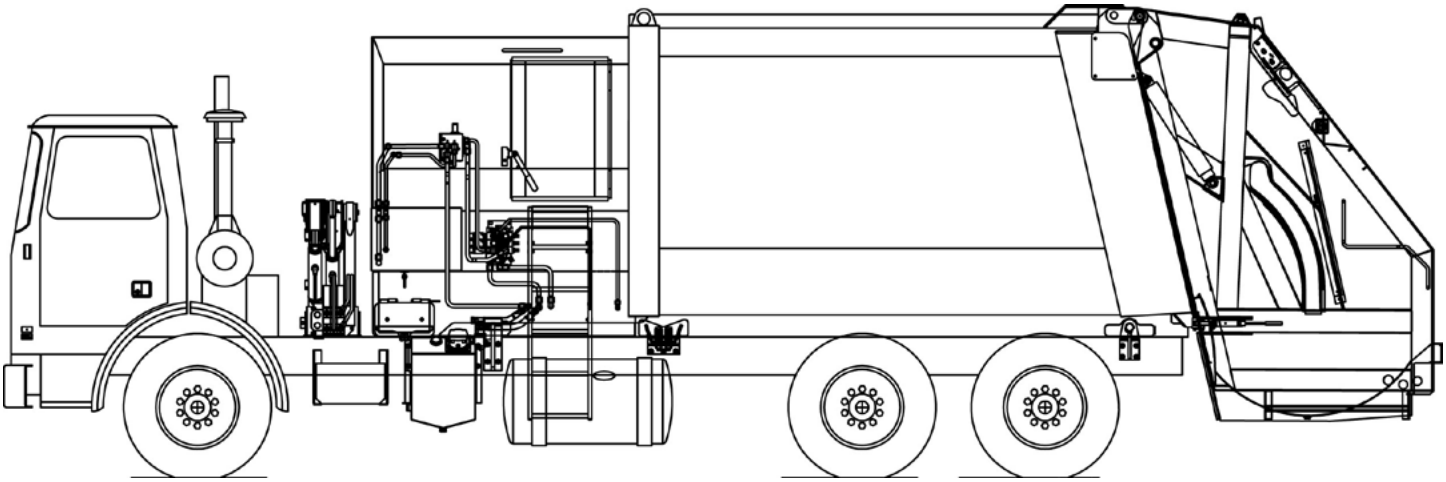

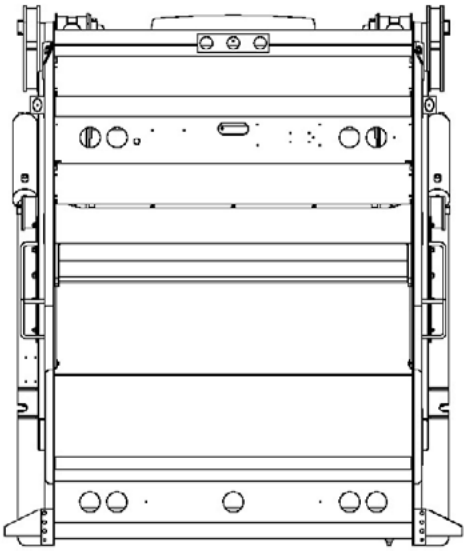

Paint and options layout detail
Use this form to describe paint schemes
Be specific about dimensions and details

Sales Order #		Submitted by	
Customer			
Paint Color 1			
Paint Color 2			
Paint Color 3			
Chassis Make			
Chassis Model			
Wheelbase			
Body Size		Approved by	

Rapid Rail®

Continuous-Pack Automated Side Loader

Standard Equipment Features included in Base Price

- 3.0 yd3 hopper (self-cleaning)
- 96 in. Lift reach
- 1,600 lb. lift capacity
- Body service props
- Tailgate service props
- Fully automatic tailgate latches
- Grease zerks - for entire system only
- O.I.G.A.I. Front mount tandem vane pump system
- Lift cylinders cushioned up and down with chrome plated rods
- Chassis frame mounted oil tank with level/temperature gauge and oil suction shut-off valve
- 3-micron return line filter with magnetic trap and in-cab filter bypass monitor
- 100-micron suction line strainer
- Abrasion resistant hydraulic hoses
- In-cab packing controls, electric
- Electric in-cab lift controls, rocker switch style
- Electric in-cab hoist controls
- Cortex Controller™ with InSight™ diagnostic display
- Observation Ladder
- Heavy duty packer paddle with liquid containment shaft seals
- 6-roller carriage
- Safety triangle
- In-cab tailgate controls, electric
- In-cab function and indicator lights
- Lift reach warning
- Backup alarm
- Backup and license plate lights
- LED Center-mounted brake light
- LED Duplicate high and low mount stop, turn, and tail lights
- LED Mid-body turn signals
- LED FMVSS #108 clearance lights and reflectors
- ICC reflective tape
- Rear mud flaps - anti-sail/anti-splash
- Rear under ride guard
- Rear camera bracket and flood lights - reverse activated
- Customer's choice of one color finish paint from Color Smart brochure
- Standard 1-year (2,000 hours of operation) warranty
- ANSI Z 245.1-2017 compliant
- Cavity coat and joint sealer
- Inside-body front closure
- Outside mounted upper packer lube line
- 5 lb. in-cab fire extinguisher

Return to Index Page

2020 Rapid Rail® Continuous-Pack Automated Side Loader - Sales Order Form

Base Units Rapid Rail® Continuous-Pack Automated Side Loader - DUMP ONLY			
☐	16 cubic yard		$ 114,356
☐	20 cubic yard		$ 116,514
☐	22 cubic yard		$ 117,590
☐	24 cubic yard		$ 118,677
☐	26 cubic yard		$ 119,768
☐	30 cubic yard		$ 121,926
☐	32 cubic yard		$ 124,300
Hopper Size			3 yd³
CHASSIS MUST COMFORM WITH HEIL'S MOST CURRENT CHASSIS SPECIFICATIONS AT WWW.HEIL.COM			
Mounting Options			
☐	Full Factory Mount		$ 6,278
☐	Mount at Dealer Destination		$ 783
Grabber and Lift Options			
☐	TriCuff Grabber - handles a variety of 30 to 110 gallon square, rectangular and round semi-automated and automated barrels		$ 1,396
☐	TriCuff Grip Rite Grabber - handles a variety of 30 to 110 gallon square, rectangular and round semi-automated and automated barrels. No Spring Tensioner		$ 1,560
☐	Belt Grabbers with Spring Loaded Inner Arm - to accommodate 60/90 gallon round automated barrels		$ 1,396
☐	Universal Belt Grabbers with Spring Loaded Inner Arm - to accommodate 90 - 300 * gallon round automated barrels		$ 1,396
☐	Changeable Spring Steel Grabbers - for 60 and 90 gallon round automated barrels with 26" - 27" grab diameter		$ 1,396
☐	Changeable Spring Steel Grabbers - for 300 * gallon round automated barrels with 41" - 43" grab diameter		$ 1,396
Grabber storage bracket supplied at no charge when any TWO sets of spring steel grabbers are ordered			
Not available on 16 yard bodies			
Power Take Off / Pump Options			
☐	Operate-in-gear-at-idle (OIGAI) Front Mount Tandem Vane Pump		STD
☐	Operate-in-gear-at-idle (OIGAI) Remote Mount Tandem Vane Pump with Transmission Driven, Constant Duty PTO		$ 3,131
☐	Clutch Shift - Extended Shaft PTO with Single Vane Pump		$ 4,300
☐	Constant Drive - Extended Shaft PTO with Single Vane Pump		$ 4,300
Lighting and Electrical Accessories			
☐	Hopper and Lift Work Light Kit - two lights - in-cab switch		$ 773
☐	Multi-Function LED Strobe / Turn Lamps		$ 649
☐	Body Side Backing Assist Lights - reverse activated		$ 536
☐	Dual Flashing 7" Amber LED Lights on Tailgate - mounted top		$ 1,123
☐	Strobe Light, Amber - in-cab switch - mounted mid-tailgate		$ 711
☐	Strobe Light, Amber - in-cab switch, pump on, and reverse activated - mounted mid-tailgate		$ 711
☐	Dual Strobe Lights, Amber - in-cab switch - mounted mid-tailgate		$ 1,025
☐	Whelen Strobe Lights Kit		$ 3,750
Lift Controls, Options and Accessories			
☐	Lift Cycle Counter		$ 685
☐	Electronic In-cab mounted rocker switch controls Mounted LH on Console		STD
☐	Joystick Control with Rocker Switch for Lift Only in addition to standard 4-button rocker switch controls (LH Mounted on Console)		$ 1,293
☐	In-Cab Remote Rocker Switch Control Kit for Lift Only (Under Seat)		$ 1,293
☐	In-Cab Remote Rocker Switch Control Kit for Lift Only (Door Mounted)		$ 1,293
☐	Lift Feathering Kit - for O.I.G.A.I. only		$ 855
Body Options			
☐	Reinforced Tailgate Hinge		$ 541
☐	Heavy Duty Overlay Package - hopper floor and sides, 48" into body (3/16" - 100,000 psi)		$ 3,466
☐	3" Hopper Drain Valve		$ 366
☐	Mud Guards - steel - mounted ahead of rear tires		$ 350
☐	Mud Flaps - anti-sail / anti-splash - ahead of rear tires		$ 242
☐	Manual Hopper Cover - mesh expanded metal		$ 1,288
☐	Pneumatic Hopper Cover		$ 4,470
☐	Solid Hopper Upper Extension - available on 30 and 32 yard bodies ONLY		$ 752
☐	Rear Fenders for Single Rear Tire		$ 711
☐	Rear Fenders for Tandem Rear Tires		$ 1,190
☐	Fully Enclosed Fenders for Single Rear Tire		$ 1,087
☐	Fully Enclosed Fenders for Tandem Rear Tires		$ 1,236
☐	Continuously Welded Body Interior		$ 427
☐	20 lb. Fire Extinguisher with Bracket		$ 530
☐	Tool Box (18" x 18" x 36") - frame mounted - available on 30 and 32 yard bodies ONLY		$ 860
☐	Tool Box (18" x 18" x 24") - frame mounted - available on 24, 26, 30, and 32 yard bodies ONLY		$ 814
☐	Tool Box (18" x 18" x 24") - bumper mounted - available on 22, 26, 30 and 32 yard bodies ONLY		$ 814
☐	Hydraulic Pressure Gauge Kit (shipped loose in cab)		$ 324
☐	Hydraulic Oil Tank Heater - 500 watts		$ 1,262
☐	Oil Temperature Gauge Kit		$ 711
☐	Dual High Pressure Filter Kit		$1,905.50
☐	Extended Tailgate Seal		$ 386
☐	Remote Lubrication System with Manifold for Packer		$0.00
☐	Broom & Shovel Rack Located on the street side hopper		$ 309
☐	Sign Frame - J-Channel - 36" x 48"		$ 407
☐	Sign Frame - J-Channel - 36" x 72"		$ 484
☐	Sign Frame - J-Channel - 48" x 72" - not available on 16 and 20 yd. bodies		$ 515
☐	Sign Frame - Roadway - 31.5" x 95.5" - only available on 30 and 32 yd. bodies		$ 2,230
☐	Sign Frame - Structural Channel - 48" x 96" - only available on 30 and 32 yd. bodies		$ 649
☐	Rear Tow Hooks		$ 474
☐	Rear Caution Decal		$ 304
☐	Spill Kit		$ 474
☐	Battery Box mounted behind grabbers		$ 994
☐	Hydraulic Oil Tank Quick Disconnect Kit - For use with filter buggy		$ 865
☐	Hydraulic Tank Low Oil Level Warning Kit		$ 1,154
Organics Option			
☐	Reduced Pack Cycle Programming for Organics Collection		$0.00
☐	Extended Tailgate Seal		$ 386
Camera Systems			
All camera systems are mounted with protective camera brackets and twin tailgate flood lights			
CAMERA MONITOR LOCATION WILL BE CAB ROOF MOUNTED			
Swivel monitor bracket will be provided for dual drive chassis			
3rd Eye® Camera Systems & 3rd® Eye Digital			
Note: Camera systems will accommodate a maximum of 6 cameras, not including driver and forward facing cameras included in 3rd Eye® Digital system			
☐	Base 3rd Eye® Single Camera System with monitor and Single Camera Mounted on Tailgate		$ 2,148
☐	Add on 3rd Eye® Camera (LH Cab) - Camera System Price Adder **(Only available if base camera is selected)**		$ 572
☐	Add on 3rd Eye® Camera (RH Cab) - Camera System Price Adder **(Only available if base camera is selected)**		$ 572
☐	Add on 3rd Eye® Camera (LH Alley) - Camera System Price Adder **(Only available if base camera is selected)**		$ 572
☐	Add on 3rd Eye® Camera (RH Alley) - Camera System Price Adder **(Only available if base camera is selected)**		$ 572
☐	Add on 3rd Eye® Camera (Hopper) - Camera System Price Adder **(Only available if base camera is selected)**		$ 572
☐	Add on 3rd Eye® Camera (Grabber) - Camera System Price Adder **(Only available if base camera is selected)**		$ 572
☐	3rd Eye® Digital System: Includes (Driver and Forward Facing Camera (Window Unit), and Gateway - (In-Cab Monitor Not Included) - *Digital monitoring service not included and must be purchased and activated though 3rd Eye post delivery *		$ 3,317

2020 Rapid Rail® Continuous-Pack Automated Side Loader - Sales Order Form			
AWTI ™ Radar Systems			
☐	AWTI™ Radar System used in conjunction with 3rd Eye Cameras - Must Select Camera from above 3rd Eye Camera Options		$ 2,359
	* Other radar systems may be available via Custom Option Request *		
Load Cell Scale Systems			
☐	Heil Optimum Payload System (HOPS) using Air-Weigh Axle Scales		$ 9,275
☐	Air-Weigh™ Axle Scale System without Interlock		$ 8,652
Auxiliary Axles and Tires			
* NOTE: All axles MUST BE installed with tires so chassis can be re-certified to new GAWR and GVWR ratings			
☐	Watson & Chalin™ Self Steering Axle: 13,500 pound capacity, hub piloted or 20" spoke wheel hubs, automatic slack adjusters, type 16 air chambers, steering stabilizer kit and reverse lift kit - for pusher applications,		$ 11,958
☐	Watson & Chalin™ Rigid Axle: 20,000 pound capacity, hub piloted or 20" spoke wheel hubs, 30/30 brake chambers, automatic slack adjusters, 1,300 cubic inch air tank and regulator kit - for pusher applications		$ 15,017
Hendrickson™ Options			
☐	Hendrickson™ Pusher Axle-13.500 pound capacity, Steerable		$ 12,360
☐	Hendrickson™ Steerable Pusher Axle: 20,000 pound capacity		$ 15,229
* Note: All auxiliary applications must be approved by Heil prior to order acceptance			
Auxiliary Axle Tire Options			
☐	255/70R-22.5 - load range H, 5,510 pound single max load at 120 psi with rim - 2 tires installed		$ 2,379
☐	275/70R-22.5 - load range H, 7,000 pound single max load at 120 psi with rim - 2 tires installed		$ 3,008
☐	Upgrade to Polished Aluminum Wheels (Set of Two)		$ 1,545
CNG Installation - Top of Body Installation			
☐	CNG Installation Charge - Includes brackets, hardware, and mounting of CNG system		$ 5,969
Extended Complete Body Warranty Options			
☐	Two (2) Year (Months 13-24) (Maximum 4,000 hrs. of Operation) Complete Heil Body Warranty		$ 4,352
☐	Three (3) Year (Months 13-36) (Maximum 6,000 hrs. of Operation) Complete Heil Body Warranty		$ 8,698
☐	Four (4) Year (Months 13-48) (Maximum 8,000 hrs. of Operation) Complete Heil Body Warranty		$ 13,004
☐	Five (5) Year (Months 13-60) (Maximum 10,000 hrs. of Operation) Complete Heil Body Warranty		$ 17,356
Extended Cylinder Warranty Options			
☐	Two (2) Year (Months 13-24) (Maximum 4,000 hrs. of Operation) All Cylinder Warranty -		$ 3,131
☐	Three (3) Year (Months 13-36) (Maximum 6,000 hrs. of Operation) All Cylinder Warranty -		$ 6,190
☐	Four (4) Year (Months 13-48) (Maximum 8,000 hrs. of Operation) All Cylinder Warranty -		$ 9,260
☐	Five (5) Year) (Months 13-60) (Maximum 10,000 hrs. of Operation) All Cylinder Warranty-		$ 11,827
Extended Hydraulic Pump and Valve Warranty Options			
☐	Two (2) Year (Months 13-24) (Maximum 4,000 hours of operation) Hydraulic Pump and Valve warranty *Not needed if purchasing extended complete body warranty*		$ 3,131
☐	Three (3) Year (Months 13-36) (Maximum 6,000 hours of operation) Hydraulic Pump and Valve warranty *Not needed if purchasing extended complete body warranty*		$ 6,190
☐	Four (4) Year (Months 13-48) (Maximum 8,000 hours of operation) Hydraulic Pump and Valve warranty *Not needed if purchasing extended complete body warranty*		$ 9,260
☐	Five (5) Year (Months 13-60) (Maximum 10,000 hours of operation) Hydraulic Pump and Valve warranty *Not needed if purchasing extended complete body warranty*		$ 11,827
Paint Options			
NOTE: LIST PAINT CODES ON PAINT DIAGRAM			
☐	Customized Paint Color - Paint Color Code NOT included in the Color Smart Brochure		$ 417
☐	Customized Lift Paint - Any color other than Visibility Yellow (Standard)		$ 345
☐	Two Tone Paint		$ 1,576
☐	Paint Striping - first stripe		$ 1,329
☐	Paint Striping - each additional stripe		$ 742
☐	Metallic Paint		$ 7,210
☐	Clear coat Finish		$ 1,844
☐	Anti-Graffiti Clear coat Finish		$ 2,652
☐	Prime Paint Only - deduct		$ (1,220)
TOTALS			
	Total from Options Above (MSRP)		**$ -**
	Additional Options (Custom's, Chassis Mods, Etc.) Total		
	Subtotal		**$ -**
	Dealer Discount (%)	**0%**	**$ -**
	Dealer Net Price		**$ -**
	Surcharge if applicable		
	Additional Discount (SPR)		
	Freight		
	Total Price per Unit		**$ -**

Return to Index Page

Rapid Rail®

Continuous-Pack Automated Side Loader

Paint Stripe and Accessory Requirements

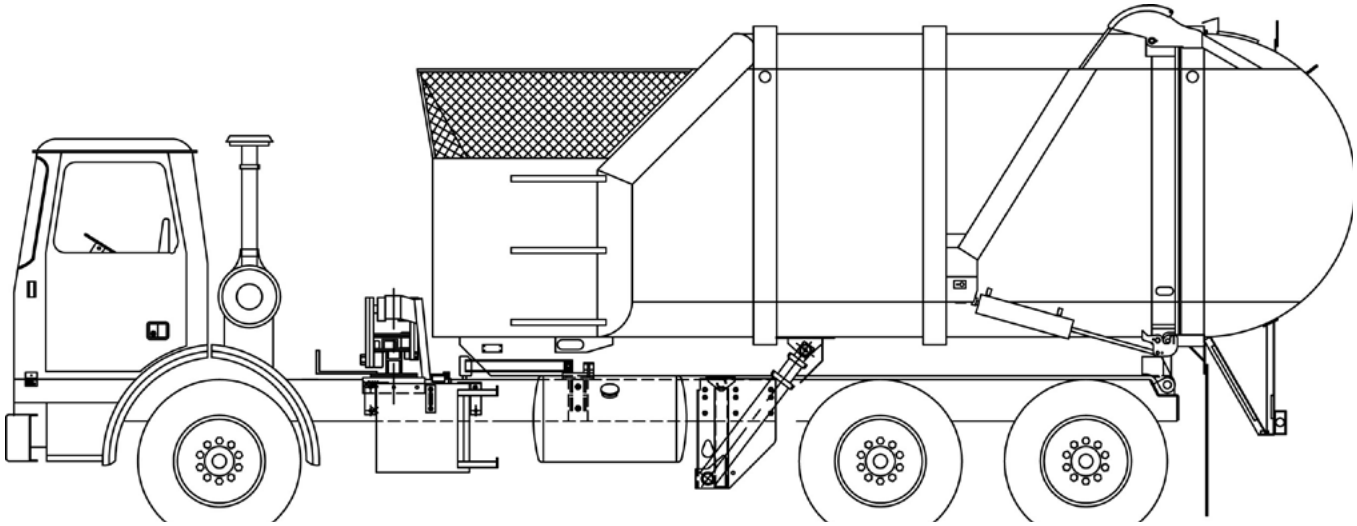

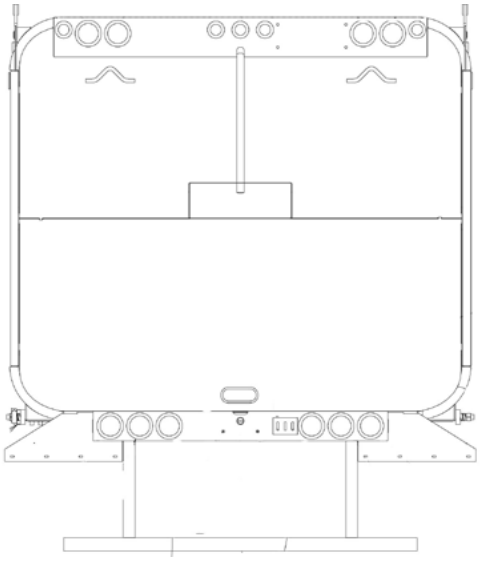

Paint and options layout detail
Use this form to describe paint schemes
Be specific about dimensions and details

Sales Order #		Submitted by	
Customer			
Paint Color 1			
Paint Color 2			
Paint Color 3			
Chassis Make			
Chassis Model			
Wheelbase			
Body Size		Approved by	

Commander™

Automated Side Loader

Standard Equipment Features included in Base Price

- 5.2 yd3 hopper
- 84 inch lift reach
- Commander Lift - 2-year limited structural warranty
- Lift capacity up to 600 lbs.
- Street side access door with step and grab (includes Interlocks)
- Under hopper liquid sump with 2 clean-out doors and steel rake
- Body service props for service hoist models
- Tailgate service props
- Fully automatic Shur-Lock™ tailgate locks
- PTO Mounted Load sense Piston Pump with Clutch Shift PTO
- Chassis frame-mounted oil tank with level/temperature gauge and oil suction shut-off valve
- 3-micron return line filter with magnetic trap and in-cab filter bypass monitor
- 100-micron suction line strainer
- Abrasion resistant hydraulic hoses
- In-cab packing controls, electric/air
- In-cab lift controls, air/electric, joystick
- In-cab controls for eject models, electric/air
- In-cab tailgate controls, air
- Cortex Controller™ with InSight™ diagnostic display and standard lift cycle counter
- Severe Duty Packer wear bar kit -Hopper only •
- In-cab controls for eject models, electric/air
- High Pressure Filter Kit

.

- Safety triangle
- In-cab function and indicator lights
- Select-O-Pack
- AutoLift™
- Arm rest
- Lift reach warning
- Backup alarm
- Backup and license plate lights
- LED Center mounted brake light
- LED Duplicate high and low mount stop, turn, and tail lights
- LED Mid-body turn signals
- LED FMVSS #108 clearance lights and reflectors
- ICC reflective tape
- Rear mud flaps - anti-sail/anti-splash
- Rear underride guard
- Rear camera bracket and flood lights - reverse activated
- Body undercoating
- Customer's choice of one color finish paint from Color Smart brochure
- Standard 1-year (2,000 hours of operation) warranty
- ANSI Z 245.1-2017 compliant
- Cavity coat and joint sealer
- Remote packer lube kit
- 5 lb. in-cab fire extinguisher
- Proportional Grabber Buttons with intergrated spear fuction.

Return to Index Page

2020 - Commander™- Automated Side Loader - Sales Order Form			
Base Unit Commander™ Automated Side Loader			
☐	24 cubic yard - CNrG Tailgate **Not Available** With This Body Size		$ 133,552
☐	28 cubic yard - CNrG Tailgate Reduces Tailgate Capacity by **2** Cubic Yards - **26 Cubic Yard Unit With CNrG™™**		$ 136,761
☐	33 cubic yard - CNrG Tailgate Reduces Tailgate Capacity by **2** Cubic Yards - **31 Cubic Yard Unit With CNrG**		$ 139,961
☐	EJECT		STD
☐	Service Hoist Kit		$ 4,656
☐	Serviceable Eject		$ 2,451
Mounting Options			
☐	Full Factory Mount for Service Hoist, Eject Models, and Serviceable Eject		$ 5,840
☐	Mount at Dealer Destination		$ 783
Grabber and Lift Options			
☐	TriCuff Grabber - handles a variety of 30 to 110 gallon square, rectangular and round semi-automated and automated barrels		$ 1,396
☐	TriCuff Grip Rite Grabber - handles a variety of 30 to 110 gallon square, rectangular and round semi-automated and automated barrels. No Spring Tensioner		$ 1,667
☐	Curotto-style Grippers		$ 1,396
Power Take Off / Pump Options			
☐	Clutch Shift - Extended Shaft PTO with Load Sense Piston Pump		STD
Lighting and Electrical Accessories			
☐	Hopper Work Light Kit - LED - (Hopper Only)		$ 390
☐	Integrated Grabber Work Light Kit mounted on the side of the hopper (not needed if ordering the base 3rd Eye camera kit below)		$ 390
☐	Multi-Function LED Strobe / Turn Lamps		$ 649
☐	Body Side Backing Assist Lights mounted front body bolster - reverse activated		$ 536
☐	Strobe Light, Amber - in-cab switch, pump on, and reverse activated - mounted lower tailgate		$ 711
☐	Dual Oval Flat LED Strobes - in-cab switch - mounted mid-tailgate		$ 1,123
☐	Dual Oval Flat LED Strobes - in-cab switch, pump on, and reverse activated - mounted mid-tailgate		$ 1,123
☐	Dual Front Oval LED Strobes		$ 819
☐	Strobe Light, Amber - in-cab switch - mounted on cab		$ 711
Lift Controls, Options and Accessories			
☐	Remote Lift Controls - mounted under seat on right hand side*		$ 1,638
☐	Additional Joystick Control for Lift - mounted in-cab (NOTE: I ASSUME THIS IS FOR DUAL_DRIVE)		$ 1,895
Body Options			
☐	Retainer Teeth in Body		$ 1,354
☐	Hopper and Body Floor Liner (3/16" - 150,000 psi)		$ 1,463
☐	1/4" AR400 Body Floor in lieu of standard 3/16" AR400		$ 1,360
☐	3" Hopper Drain Valve		$ 366
☐	Mud Guards - steel - mounted ahead of tires		$ 350
☐	Mud Flaps - anti-sail / anti-splash - ahead of rear tires		$ 242
☐	Hopper Hood		$ 2,096
☐	Manual Hopper Cover - Standard Cover - mesh expanded metal with extended handle accessible from ground		$ 1,288
☐	Manual Hopper Cover for use with Hopper Hood		$ 1,288
☐	Hydraulic Sliding Top Door with Lift Interlock and indicator light in cab - Not available for if hopper hood if selected		$ 7,086
☐	20 lb. Fire Extinguisher with Bracket		$ 530
☐	Dual 20 lb. Fire Extinguishers with Bracket		$ 1,056
☐	Tool Box (18" x 18" x 24") - frame mounted - available on Eject Models Only		$ 814
☐	Tool Box (18" x 18" x 24") - bumper mounted		$ 814
☐	Hydraulic Pressure Gauge Kit (shipped loose in cab)		$ 324
☐	Hydraulic Tank Low Oil Level Warning Kit		$ 1,154
☐	Rear Caution Decal		$ 304
☐	Broom and Shovel Kit - Mounted Underbody - Includes Broom and Shovel		$ 227
☐	Hydraulic Oil Tank Quick Disconnect Kit - For use with filter buggy		$ 865
☐	Spill Kit		$ 474
☐	Fender Extension Kit		$ 773
☐	Sump Chutes		$ 494
☐	Tapered Roof Kit - Only Available in 28 cubic yard units - Helps reduce trash from blowing out		$ 1,586
☐	Low Profile Shur Lock Tailgate Locks MUST be used with Tag Axle Applications - Does not have T/G closed indicator flag		$ 386
☐	Infinity Series Packer/Eject Cylinders with scrapers and hardened rods to 50 HRC - Includes Five (5) Year Packer/Eject Cylinder Only Warranty that covers dents and dings (This Option is Required if purchasing extended warranty's below)		$ 3,245
Note: Hopper hood may not be ordered in conjunction with a sliding top door			

CNrG Tailgate Mounted CNG - Includes Installation Fee - Reduces Yardage Capacity by 2 Cubic Yards			
☐	75 DGE CNG System -		$ 44,676
☐	90 DGE CNG System -		$ 50,784
CNrG Options			
☐	Front Bumper Fill with Kill Cap		$ 1,329
☐	Remote Fill, StreetSide Rear Fill Port		$ 2,318
3rd Eye® Camera Systems & 3rd® Eye Digital			
Note: Camera systems will accommodate a maximum of 6 cameras, not including driver and forward facing cameras included in 3rd Eye® **Digital system**			
☐	Base 3rd Eye® Dual Camera System with 9" monitor which includes digital grabber guidelines, Dual Cameras, One mounted Rear View and one Grabber Camera Mounted On The Side Of The Hopper. This Kit Also Includes the Integrated grabber work light kit. Hopper work light not included and must be ordered from the electrical options is needed.		$ 4,250
☐	Add on 3rd Eye® Camera (LH Cab) - Camera System Price Adder **(Only available if base camera is selected)**		$ 572
☐	Add on 3rd Eye® Camera (RH Cab) - Camera System Price Adder **(Only available if base camera is selected)**		$ 572
☐	Add on 3rd Eye® Camera (LH Alley) - Camera System Price Adder **(Only available if base camera is selected)**		$ 572
☐	Add on 3rd Eye® Camera (RH Alley) - Camera System Price Adder **(Only available if base camera is selected)**		$ 572
☐	Add on 3rd Eye® Camera (Inside Hopper) - Camera System Price Adder **(Only available if base camera is selected)**		$ 572
☐	3rd Eye® Digital System: Includes (Driver and Forward Facing Camera (Window Unit), and Gateway - (In-Cab Monitor Not Included) - *Digital monitoring service not included and must be purchased and activated though 3rd Eye post delivery *		$ 3,317
Backup Sensors			
☐	AWTI Radar System		$ 2,359
Extended Complete Body Warranty Options			
☐	Two (2) Year (Months 13-24) (Maximum 4,000 hrs. of Operation) Complete Heil Body Warranty Requires additional purchase of Infinity packer/eject cylinders from above		$ 2,802
☐	Three (3) Year (Months 13-36) (Maximum 6,000 hrs. of Operation) Complete Heil Body & Lift Warranty Requires additional purchase of Infinity packer/eject cylinders from above		$ 8,698
☐	Four (4) Year (Months 13-48) (Maximum 8,000 hrs. of Operation) Complete Heil Body & Lift Warranty Requires additional purchase of Infinity packer/eject cylinders from above		$ 12,999
☐	Five (5) Year (Months 13-60) (Maximum 10,000 hrs. of Operation) Complete Heil Body & Lift Warranty Requires additional purchase of Infinity packer/eject cylinders from above		$ 17,350
Extended Cylinder Warranty Options			
☐	Two (2) Year (Months 13-24) (Maximum 4,000 hrs. of Operation) All other Non-Infinity Cylinder Warranty - Requires additional purchase of Infinity packer/eject cylinders from above		$ 3,131
☐	Three (3) Year (Months 13-36) (Maximum 6,000 hrs. of Operation) All other Non-Infinity Cylinder Warranty - Requires additional purchase of Infinity packer/eject cylinders from above		$ 6,190
☐	Four (4) Year (Months 13-48) (Maximum 8,000 hrs. of Operation) All other Non-Infinity Cylinder Warranty - Requires additional purchase of Infinity packer/eject cylinders from above		$ 9,260
☐	Five (5) Year (Maximum 10,000 hrs. of Operation) All other Non-Infinity Cylinder Warranty - Requires purchase of Infinity packer or eject Cylinders from above		$ 11,827
Extended Hydraulic Pump and Valve Warranty Options			
☐	Two (2) Year (Months 13-24) (Maximum 4,000 hours of operation) Hydraulic Pump and Valve warranty *Not needed if purchasing extended complete body warranty*		$ 3,131
☐	Three (3) Year (Months 13-36) (Maximum 6,000 hours of operation) Hydraulic Pump and Valve warranty *Not needed if purchasing extended complete body warranty*		$ 6,190
☐	Four (4) Year (Months 13-48) (Maximum 8,000 hours of operation) Hydraulic Pump and Valve warranty *Not needed if purchasing extended complete body warranty*		$ 9,260
☐	Five (5) Year (Months 13-60) (Maximum 10,000 hours of operation) Hydraulic Pump and Valve warranty *Not needed if purchasing extended complete body warranty*		$ 11,827
Paint Options			
NOTE: LIST PAINT CODES ON PAINT DIAGRAM			
☐	Customized Paint Color - Paint Color Code NOT included in the Color Smart Brochure		$ 417
☐	Customized Lift Paint - Any color other than Visibility Yellow (Standard)		$ 345
☐	Two Tone Paint		$ 1,576
☐	Paint Striping - first stripe		$ 1,329
☐	Paint Striping - each additional stripe		$ 742
☐	Metallic Paint		$ 7,210
☐	Clear coat Finish		$ 1,844
☐	Anti-Graffiti Clear coat Finish		$ 2,652
☐	Prime Paint Only - deduct		$ (1,220)
TOTALS			
	Total from Options Above (MSRP)		**$ -**
	Additional Options (Custom's, Chassis Mods, Etc.) Total		**$ -**
	Surcharge if applicable		**$ -**
	Subtotal		**$ -**
	Dealer Discount (%)	**0%**	**$ -**
	Dealer Net Price		**$ -**
	Additional Discount (SPR)		
	Freight		
	Total Price per Unit		**$ -**

Return to Index Page

Commander®

Automated Side Loader

Paint Stripe and Accessory Requirements

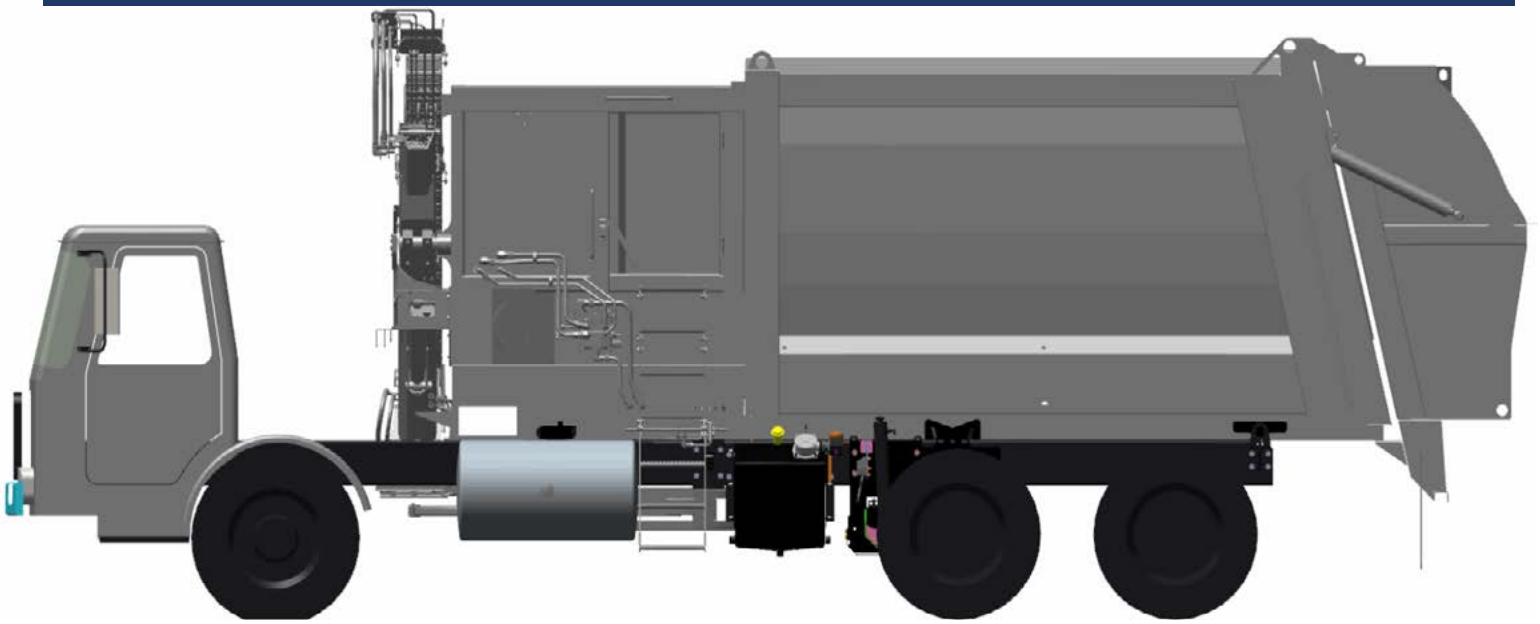

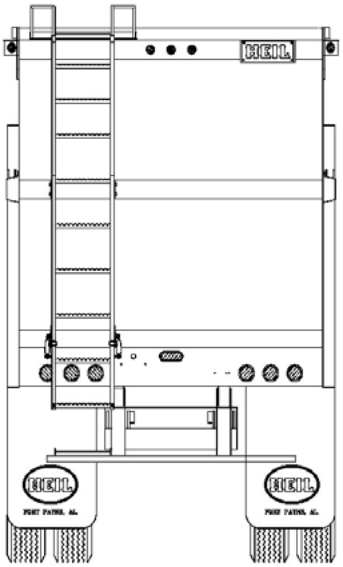

PAINT AND OPTIONS LAYOUT DETAIL
USE THIS FORM TO DESCRIBE PAINT SCHEMES
BE SPECIFIC ABOUT DIMENSIONS AND DETAILS

Sales Order #		Submitted by	
Customer			
Paint Color 1			
Paint Color 2			
Paint Color 3			
Chassis Make			
Chassis Model			
Wheelbase			
Body Size		Approved by	

DuraPack® 4060

Split-Body Rear Loader

Standard Equipment Features included in Base Price

- Bolt-on ANSI compliant rear riding steps
- Street and curb side access doors with step and grab handle
- Tailgate service props
- Automatic tailgate latches
- Front mount tandem vane pump system
- • Chrome plated ejector cylinder sleeves
- Underbody oil tank with level / temperature gauge and oil suction shut-off valve
- 3-micron return line filter with magnetic trap and in-cab filter bypass monitor
- 100-micron suction line strainer
- Abrasion resistant hydraulic hoses
- Regenerative valve for fast packer cycle and reload times
- Dual side tailgate buzzer
- Neutral safety switch on automatic transmissions only
- Fully sealed, electric left and right side tailgate mounted packer controls
- ANSI Z 245.1-2017 compliant
- Side Door Interlock
- Body Side fender extensions
- Backup alarm
- Backup and license plate lights
- LED Center-mounted brake light
- LED Duplicate high and low mount stop, turn, and tail lights
- LED Mid-body turn signals
- LED FMVSS #108 clearance lights and reflectors
- ICC reflective tape
- Rear camera bracket and flood lights - reverse activated
- Dual emergency stop buttons - one on each side of the tailgate
- Cavity coat and joint sealer
- Body undercoating
- Customer’s choice of one color finish paint from Color Smart brochure
- Standard 1-year (2,000 hours of operation) warranty

Return to Index Page

2020 DuraPack® 4060 Split-Body Rear Loader - Sales Order Form			
Base Units DuraPack® 4060 Split-Body Rear Loader			
☐	25 cubic yard		$ 174,570
	EJECT		
	Hopper Size	Street	1.1 yd^3
	Hopper Size	Curb	1.5 yd^3
CHASSIS MUST COMFORM WITH HEIL'S MOST CURRENT CHASSIS SPECIFICATIONS AT WWW.HEIL.COM			
Mounting Options			
☐	Full Factory Mount		$ 4,764
☐	Mount at Dealer Destination		$ 798
Power Take Off / Pump Options			
☐	Front Mount Tandem Vane Pump		STD
☐	Remote Mount Tandem Vane Pump with Transmission Driven, Constant Drive PTO		$ 3,131
☐	Clutch Shift - Extended Shaft PTO with Tandem Vane Pump		$ 3,966
Lighting and Electrical Accessories			
☐	Hopper Work Lights Kit - two lights (1 per hopper) - switch on tailgate		$ 500
☐	Multi-Function LED Strobe / Turn Lamps - includes LED light package for entire unit		$ 649
☐	LED Body Side Backing Assist Lights - reverse activated		$ 819
☐	Strobe Light, Amber - in-cab switch - mounted front of body		$ 711
☐	Strobe Light, Amber - in-cab switch - mounted upper tailgate		$ 711
☐	Dual Front LED Oval Strobe Lights, Amber - in-cab switch		$ 834
☐	Municipal Lights with Dual 7" Amber incandescent & Overhead Flood Light		$ 1,530
Container Handling / Cart Tipper Options			
☐	Left hand Tailgate Single Cart Tipper Control Valve, Handle, Plumbing and Hose Kit		$ 2,148
☐	Right hand Tailgate Single Cart Tipper Control Valve, Handle, Plumbing and Hose Kit		$ 2,148
☐	Bayne Cart Tipper - Specify Model - Includes Controls, Valves, Plumbing, and Installation		See Bayne
☐	Customer Installed Left hand Tailgate Single Cart Tipper Kit - Bayne Bracket, Control Valve, Handle, Plumbing and Hose Kit		$ 2,467
☐	Customer Installed Right hand Tailgate Single Cart Tipper Kit - Bayne Bracket, Control Valve, Handle, Plumbing and Hose Kit		$ 2,467
CUSTOMER SUPPLIED CART TIPPERS ARE NOT ADMISSIBLE			
Body Options and Accessories			
☐	Mud Flaps - anti-sail / anti-splash - ahead of rear tires		$ 242
☐	Hydraulic Oil Tank Heater - 500 watts		$ 1,262
☐	Hydraulic Pressure Gauge Kit (shipped loose in cab)		$ 324
☐	Dual High Pressure Filter Kit		$ 1,906
☐	20 lb. Fire Extinguisher with Bracket		$ 525
☐	Tool Box (18" x 18" x 24") - frame mounted		$ 814
☐	5 Gallon Cooler and Bracket - frame mounted		$ 376
☐	Broom and Shovel Rack - mounted on tailgate		$ 232
☐	Manual Tailgate Controls on Street side and Curbside Tailgates		$ 1,509
☐	Oil Tank - Mounted on Front Head		$ 1,215
☐	Spill Kit		$ 474
☐	Hydraulic Oil Tank Quick Disconnect Kit - For use with filter buggy		$ 865
☐	1/4 " Tailgate Hopper Floor Liner and 3/16" Tailgate Side Liners on both Tailgates		$ 1,622
☐	PTO Hour Meter *available only if PTO is selected*		$ 200
Camera Systems			
All camera systems are mounted with protective camera brackets and twin tailgate flood lights			
CAMERA MONITOR LOCATION WILL BE CAB ROOF MOUNTED			
Swivel monitor bracket will be provided for dual drive chassis			
3rd Eye® Camera Systems & 3rd® Eye Digital			
Note: Camera systems will accommodate a maximum of 6 cameras, not including driver and forward facing cameras included in 3rd Eye® Digital system			
☐	Base 3rd Eye® Single Camera System with monitor and Single Camera Mounted on Tailgate		$ 2,148
☐	Add on 3rd Eye® Camera (LH Cab) - Camera System Price Adder **(Only available if base camera is selected)**		$ 572
☐	Add on 3rd Eye® Camera (RH Cab) - Camera System Price Adder **(Only available if base camera is selected)**		$ 572
☐	Add on 3rd Eye® Camera (LH Alley) - Camera System Price Adder **(Only available if base camera is selected)**		$ 572
☐	Add on 3rd Eye® Camera (RH Alley) - Camera System Price Adder **(Only available if base camera is selected)**		$ 572
☐	3rd Eye® Digital System: Includes (Driver and Forward Facing Camera (Window Unit), and Gateway - (In-Cab Monitor Not Included *Digital monitoring service not included and must be purchased and activated though 3rd Eye post delivery *		$ 3,317
Load Cell Scale Systems			
☐	Heil Optimum Payload System (HOPS) using Air-Weigh Axle Scales		$ 9,275
☐	Air-Weigh™ Axle Scale System without Interlock		$ 8,652

2020 DuraPack® 4060 Split-Body Rear Loader - Sales Order Form			
CNG Installation -			
☐	Top Of Body -CNG Installation Charge - Includes brackets, hardware, and mounting of approved CNG system		$ 5,969
☐	Front Of Body -CNG Installation Charge - Includes brackets, hardware, and mounting of approved CNG system		$ 5,969
Extended Warranty - Complete Body Options			
☐	Two (2) Year (Months 13-24) (Maximum 4,000 hrs. of Operation) Complete Heil Body Warranty		$ 4,887
☐	Three (3) Year (Months 13-36) (Maximum 6,000 hrs. of Operation) Complete Heil Body Warranty		$ 9,821
☐	Four (4) Year (Months 13-48) (Maximum 8,000 hrs. of Operation) Complete Heil Body Warranty		$ 14,678
☐	Five (5) Year (Months 13-60) (Maximum 10,000 hrs. of Operation) Complete Heil Body Warranty		$ 19,596
Extended Warranty - Cylinder's Options			
☐	Two (2) Year (Months 13-24) or (Maximum 4,000 hrs. of Operation) All Cylinder Warranty - *Not needed if purchasing extended complete body warranty*		$ 1,906
☐	Three (3) Year (Months 13-36) or (Maximum 6,000 hrs. of Operation) All Cylinder Warranty - *Not needed if purchasing extended complete body warranty*		$ 3,430
☐	Four (4) Year (Months 13-48) or (Maximum 8,000 hrs. of Operation) All Cylinder Warranty - *Not needed if purchasing extended complete body warranty*		$ 5,639
☐	Five (5) Year) (Months 13-60) or (Maximum 10,000 hrs. of Operation) All Cylinder Warranty- *Not needed if purchasing extended complete body warranty*		$ 7,050
Extended Warranty - Hydraulic Pump and Valve Options			
☐	Two (2) Year (Months 13-24) or (Maximum 4,000 hours of operation) Hydraulic Pump and Valve warranty *Not needed if purchasing extended complete body warranty*		$ 1,906
☐	Three (3) Year (Months 13-36) or (Maximum 6,000 hours of operation) Hydraulic Pump and Valve warranty *Not needed if purchasing extended complete body warranty*		$ 3,430
☐	Four (4) Year (Months 13-48) or (Maximum 8,000 hours of operation) Hydraulic Pump and Valve warranty *Not needed if purchasing extended complete body warranty*		$ 5,639
☐	Five (5) Year (Months 13-60) or (Maximum 10,000 hours of operation) Hydraulic Pump and Valve warranty *Not needed if purchasing extended complete body warranty*		$ 7,050
Paint Options			
NOTE: LIST PAINT CODES ON PAINT DIAGRAM			
☑	Customized Paint Color - Paint Color Code NOT included in the Color Smart Brochure		$ 417
☐	Two Tone Paint		$ 1,581
☐	Paint Striping - first stripe		$ 1,329
☐	Paint Striping - each additional stripe		$ 742
☐	Metallic Paint		$ 7,210
☐	Clear coat Finish		$ 1,844
☐	Anti-Graffiti Clear coat Finish		$ 2,647
☐	Prime Paint Only - deduct		$ (970)
TOTALS			
	Total from Options Above (MSRP)		**$ -**
	Additional Options (Custom's, Chassis Mods, Etc.) Total		
	Subtotal		**$ -**
	Dealer Discount (%)	**0%**	**$ -**
	Dealer Net Price		**$ -**
	Surcharge if applicable		
	Additional Discount (SPR)		**$ -**
	Freight		
	Total Price per Unit		**$ -**

Return to Index Page

DuraPack® 4060

Split-Body Rear Loader

Paint Stripe and Accessory Requirements

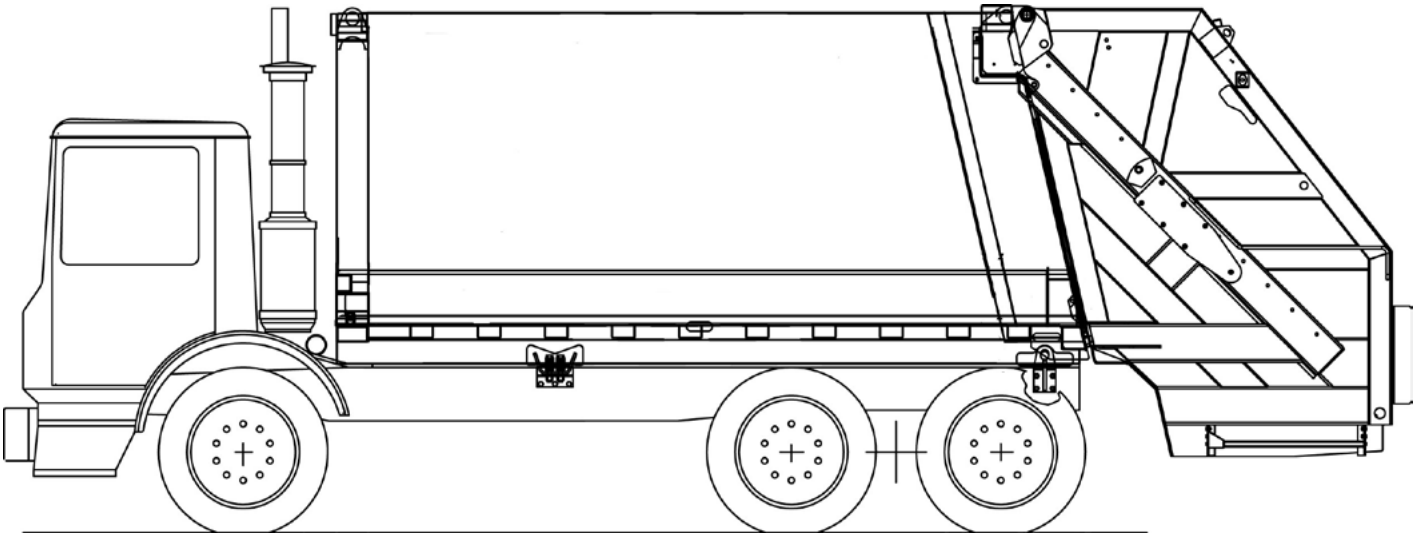

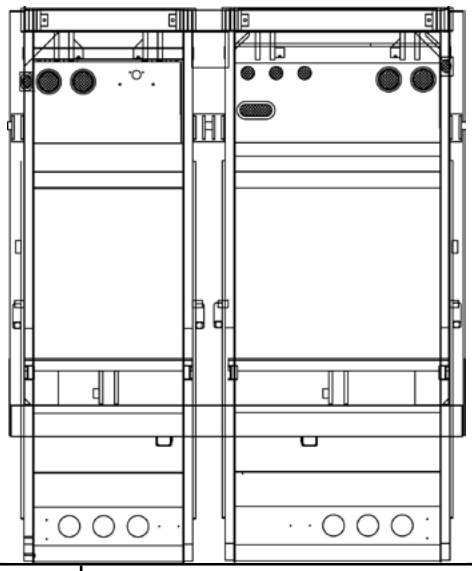

Paint and options layout detail
Use this form to describe paint schemes
Be specific about dimensions and details

Sales Order #		Submitted by	
Customer			
Paint Color 1			
Paint Color 2			
Paint Color 3			
Chassis Make			
Chassis Model			
Wheelbase			
Body Size		Approved by	

2020 Bayne Sales Order Form

BAYNE CART TIPPERS AND CARRY CANS

Bayne Cart Tippers

MODEL	DESCRIPTION	NOTES	ONE PER TRUCK	Price	TWO PER TRUCK	Price
BTL1110 *	Rotary Actuated	Use for rear loading	☐	$ 6,319	☐	$ 11,485
BTL1112	Rotary Actuated	Use for rear loading	☐	$ 6,319	☐	$ 11,485
BTL208-12	Rotary Actuated	Use for rear loading	☐	$ 6,438	☐	$ 11,721
MBTL180	Rotary Actuated	Use for rear loading - no packer blade interference with proper installation	☐	$ 5,711	☐	$ 10,269
TL1116	Rotary Actuated	Use for rear loading	☐	$ 6,396	☐	$ 11,639
Revolution HD	Rotary Actuated	Use for rear loading	☐	$ 6,139	☐	$ 11,124
TL1120	Rotary Actuated	Use for side or rear loading	☐	$ 6,396	☐	$ 11,639
Taskmaster	Direct Cylinder Actuated	Use for rear loading - modifications may be required for operation with commercial container mechanisms	☐	$ 4,202	☐	$ 7,251
GRL1110	Rotary Actuated	Grabber model for rear loading - can be used with roll bar	☐	$ 7,967		N/A
GTL1110 **	Rotary Actuated	Grabber model for side or rear loading	☐	$ 10,903		N/A

All Tippers above include Bayne Bracket, Control Valve, Handle, Plumbing and Hose Kit -

** The Taskmaster Hi-Lift and GTL series may not be used with commerci Heil

Note: For non-traditional dumping heights, vertical lifts are available on most models

Bayne Carry Cans

MODEL	DESCRIPTION	NOTES		Price
1910-0010	3 yard Carry Can with right side mounted cart tipper (single pin)	Includes single BTL208-12 (Bayne Can Only) Does not include body hydraulics and must be selected from the price guide	☐	$ 8,817
Safety Yellow Paint			☐	STD
Special Color Paint			☐	$ 417

Totals

Total from Options Above (MSRP)		$ -
Additional Options (SOARs, Chassis Mods, Etc.) Total		
Surcharge if applicable		$ -
Subtotal		$ -
Dealer Discount (%)	0%	$ -
Dealer Net Price		$ -
Additional Discount (SPR)		
Freight		
Total Price per Unit		$ -

Return to Index Page

2020 Training, Ready Truck and Chassis Mods Sales Order Form			
TRAINING, READY TRUCK AND CHASSIS MODIFICATION OPTIONS			
Training Options			
☐	Nexteligence Maintenance, Adjustment, and Troubleshooting (MAT) Product Training – 2 days Onsite Training; **Up To 20 People Per Day**		$ 4,788
☐	Nexteligence Maintenance, Adjustment, and Troubleshooting (MAT) Product Training – 2.5 days at Fort Payne; **Price Per Person**		$ 834
☐	Nexteligence Connected-Tech Silver or Gold Level Online Training (General Technical Training For Technicians; Not Product Specific) **Price Per Person**		$ 1,074
Chassis Modification Options - All Makes			
☐	Wheelbase Shortening		$ 2,730
☐	Wheelbase Lengthening		$ 3,966
☐	Customer's Choice of One Color Finish Paint for Cab		$ 4,120
☐	Telma Frictionless Braking System - installed		$ 19,055
☐	Roof Mounted Air Conditioning System - Red Dot Model 6100 - Installed		$ 7,725
☐	Bumper Extension Modification		$ 3,090
Chassis Component Relocation Charges			
☐	Relocation of Chassis Coolant Tube		$ 644
☐	Relocation of Air Dryer to Heil Specifications		$ 515
☐	Relocation of Air Tanks to Heil Specifications		$ 695
☐	Relocation of Battery Box to Heil Specifications		$ 464
☐	Relocation of Fuel Tank to Heil Specifications		$ 670
☐	Relocation of Oil Cooler to Heil Specifications		$ 412
☐	Relocation of Muffler to Heil Specifications - muffler will only be moved under the guidelines obtained from the chassis vendor by the distributor and forwarded to customer service. Additional materials required will be added to the relocation charge		$ 979
Chassis Handling Charges			
☐	Chassis Tow Away Prep - condition whereby a chassis is checked in, fueled, stored, and then towed from the premises for any reason. Towing charge is not included		$ 309
☐	Chassis Drive Away Prep - condition whereby a chassis is checked in, fueled, stored, installed with drive away lights and mud flaps, and then driven away from the premises for any reason. Drive away charge is not included		$ 515
☐	Alternative Fuel (CNG/LNG) Handling Fee - Tank and Gas for internal transport		$ 876
TOTALS			
	Total from Options Above (MSRP)		**$ -**
	Additional Options (SOARs, Chassis Mods, Etc.) Total		
	Subtotal		**$ -**
	Dealer Discount (%)	**0%**	**$ -**
	Dealer Net Price		**$ -**
	Additional Discount (SPR)		
	Freight		
	Total Price per Unit		**$ -**

Return to Index Page

Terms & Conditions of Sale

1. **ORDERS.** All orders are subject to acceptance or rejection by Environmental Solutions Group, its subsidiaries, or affiliates including but not limited to: Heil Environmental, Marathon Equipment Company, The Curotto-Can, LLC, and Bayne Machine Works (collectively, "ESG"). NO ORDERS MAY BE CHANGED IN ANY MANNER WITHIN THIRTY DAYS OF THE SCHEDULED PRODUCTION DATE. ANY CHANGES REQUIRED BY THE CUSTOMER WITHIN THIS 30-DAY TIME FRAME MAY INCUR ADDITIONAL CHARGES AND WILL CAUSE THE ORDER TO BE REMOVED FROM THE PRODUCTION SCHEDULE AND RESCHEDULED AS DEEMED NECESSARY BY ESG IN ITS SOLE JUDGMENT.

2. **ORDER CANCELLATION.** After acceptance, orders for solid waste management and/or recycling Products ("Products") cannot be cancelled except upon terms that will compensate ESG fully for all inconvenience, cost, loss or damage sustained.

3. **ORDER ACKNOWLEDGEMENTS.** An Order Acknowledgment ("OA") must be reviewed, signed and returned to the applicable ESG subsidiary or affiliate to indicate Purchaser's verification the order is accurate. ESG reserves the right to hold an order from being slotted in the Production Schedule until a signed OA has been received. Regardless of whether an Order Acknowledgement has been executed, Purchaser expressly waives any claims of error or loss for orders that are produced in accordance with an OA transmitted to Purchaser that Purchaser does not correct and transmit in writing to ESG before production begins.

4. **CUSTOM ORDER REQUESTS.** Orders for Products with components not regularly carried in stock or requiring special engineering, special parts ordering or special manufacture are in every case subject to approval by the Product Management department of ESG and shall be subject to the procedures and qualifications set forth in ESG's *Custom Order Policy* as published by ESG and/or posted on the respective ESG website. Work performed at Purchaser's request such as sketches, drawings, design, testing, fabrication and materials shall be charged at then-current rates.

5. **PERFORMANCE.** ESG shall not be liable for damages of any kind whatsoever arising from failure to complete the contract in accordance with its items if such changes are due to Acts of God, wars, severe weather, strikes, fires, floods, accidents, material shortages, delays in transportation and other acts of force majeure or other causes beyond its reasonable control.

6. **INTELLECTUAL PROPERTY.** Sketches, engineering drawings, specifications, models, mock-ups, manuals, marketing materials, and all preparatory work submitted to, created or furnished by ESG shall remain its exclusive property. No other customer use of these materials is authorized, nor may derivations, alternatives or modifications created there from be used or disclosed to anyone except with the prior written consent of ESG.

7. **SHIPMENT AND F.O.B. POINT.** All shipments will be made after completion of manufacture unless otherwise agreed to in writing. In the event that agreement is reached for ESG to store completed items, the Purchaser will be invoiced immediately upon completion of manufacture, and such invoice shall be due and payable according to these terms. Storage shall be at the risk of the Purchaser and ESG shall be liable only for the ordinary care of the property. Unless otherwise stated in writing, all prices quoted or otherwise listed are F.O.B. point of manufacture. In all cases, in-transit liability and risk of loss transfers to the Purchaser at the time of delivery to the Purchaser, their employees, agents, or a delivery service or common carrier – whichever occurs first. Unless otherwise provided, with respect to the attachment or affixing of ESG Products to the Purchaser's property (e.g. truck chassis), title and risk of loss with respect to such Products are transferred to Purchaser upon initiation of such attachment.

8. **PURCHASER'S PROPERTY.** ESG may charge the Purchaser at current rates, for handling and storing Purchaser's property (e.g. truck chassis or Purchaser-supplied accessories) when held for more than thirty days. All Purchasers' property, or third parties' property, that is stored by ESG or its employees, agents or assigns (whether on or off ESG facilities) is at the Purchaser's or other party's risk. ESG shall only provide for ordinary care of the property and shall not be liable for any loss or damage thereto caused by fire, water, corrosion, vandalism, theft, negligence, or any cause whatsoever. It is the Purchaser's unconditional obligation to insure its property and/or accept the risk of loss.

9. **TRAINING.** It is the Purchaser's responsibility to provide these *Terms & Conditions of Sale* to the Product owner and to specifically notify the Product owner that it is the Product owner's responsibility to ensure that the *Operators Manual* remains with each unit and the *Parts & Service Manual* is available for use. Additionally, regardless of whether or not the manufacturer or its designee provides training at the time of Product delivery, the Product owner is responsible for training their operators and maintenance personnel and shall ensure that every person who operates or maintains the Product has been trained on the proper operation, service, storage, service hoist use, battery disconnect use, lock out/tag out procedures and the Product owner's company work rules for each Product.

10. **PRICES.** All orders are subject to current prices in effect at the time of shipment, including any applicable surcharges. Purchaser must exclusively assign the qualified alternative motor vehicle credit to ESG or its designee. Purchaser expressly understands and agrees that the pricing quoted for qualified alternative motor vehicles includes a discount predicated on ESG obtaining a stipulated tax credit and Purchaser agrees to fully compensate ESG for any reduction or recapture of said qualified alternative motor vehicle tax credit for any reason whatsoever. It is understood that recapture of the tax credit may be caused by converting a Compressed Natural Gas ("CNG") engine to a diesel engine.

11. **PAYMENT AND COLLECTION.** ESG's standard domestic payment terms are Net 30 days from the date of invoice unless modified by a separate written agreement with your company. For non-domestic shipments, a Letter of Credit or other ESG approved surety of payment may be required prior to shipment. Notwithstanding the foregoing, ESG reserves the right to administer credit in accordance with its Credit Department's sole judgment at any time to any order and its decision shall be final, non-appealable, and binding. If for any reason the Purchaser defaults on any monies owed to ESG, said Purchaser shall be responsible for all costs incurred by ESG in the collection of outstanding monies including but not limited to: collection agency fees, filing fees, judgment, interest expense, settlement, Court and/or administration costs, attorney's fees, etc. ESG reserves the right to charge and collect late fees for overdue payments.

12. **TAXES.** Unless specifically stated on your quotation and invoice, prices charged by ESG do not include Federal, State, City or other excise, occupation, sales, use, VAT or similar taxes which are extra and are the customers' obligation to pay to the applicable taxing authority at rates in effect at time of shipment. If Federal Excise Taxes are included and listed on the order acknowledgement or invoice, they are stated at the rates and regulations in effect at the time this order is written, and are subject to revision in accordance with rates and regulations in effect at time of shipment. If Federal Excise Taxes are not included on ESG's invoice, this shall not be construed as ESG offering an opinion on taxability of our product(s) or providing tax or legal advice. ESG does not provide tax advice. Customers are encouraged to consult with a tax professional to determine the potential for any tax liabilities beyond those reflected on the invoice from ESG.

13. **PRODUCT IMPROVEMENT.** ESG reserves the right to change its solid waste management & recycling Product offerings (collectively, "Products"), Product specifications, material or component suppliers, Product design, and/or Production procedures at any time in its sole judgment.

14. **MOUNTING PRICES.** For mobile equipment Products, it is the Purchaser's responsibility to provide or purchase from ESG a new chassis that meets the specifications published by ESG on the website of its applicable subsidiary or affiliate for the specific Product model & size ordered. Used chassis will not be factory mounted. Mounting prices assume normal factory installation on a fully functional truck chassis suitable for the unit purchased. Repair of chassis, relocation or installation of batteries, gas tanks, mufflers, air tanks etc. will be made at an additional charge, to be billed at the standard factory parts and labor rates. It is expressly understood that ESG is not authorized to modify exhaust systems on engines that comply with EPA emission standards which became effective in 2007. Chassis delivered to ESG requiring modification of such an exhaust system to enable body mounting will be returned to the Purchaser or a designated chassis dealer at the Purchaser's expense.

15. **WARRANTY.** ESG warrants its Products in accordance with the applicable ESG subsidiary or affiliate's *Warranty Statement* (the "Warranty Statement") provided with the Product or published on the respective website unless you have a contract with ESG providing specific terms and conditions of warranty. A copy of the *Warranty Statement* is available from your Dealer and is posted on ESG's applicable website for the Product. While the text in the *Warranty Statement* for each respective ESG entity is more specific and shall prevail, ESG's Product warranty is expressly limited to repair or replacement of any component or part thereof, for any such Product that is determined by ESG to be defective in materials or workmanship. The component or part shall be repaired or replaced without cost to the first purchaser for materials and labor provided such unit is returned for such repair or replacement to an authorized ESG Dealer within six months from the unit's in-service date to such first purchaser. Any Product warranty is not transferable, except for sales demonstration units. No warranty claims will be processed on any ESG Product unless the warranty registration was submitted timely to the ESG Customer Support Department applicable to the Product. Any service parts sold by ESG carry a six month warranty for part replacement only, due to a defect in material or workmanship. Troubleshooting time, component removal and installation labor cost is excluded from ESG's service part warranty.

16. **CHASSIS AND ACCESSORY WARRANTY.** ESG makes no warranty of Products or component parts manufactured by others and supplied or installed by us, except to the extent there is a defect in workmanship solely related to the installation at ESG's factory. Chassis, component parts and accessories are solely subject to the warranties, if any, as provided by their respective manufacturers. This expressly applies to any chassis-related issues and/or accessory components – regardless of whether said chassis or accessory was provided by ESG at the time of sale. Additionally, unless there is a defect in workmanship solely related to the installation at ESG's factory, ESG shall not administer any chassis, component or accessory manufacturer's warranty directly or as a third party liaison for the Product owner or Dealer. The Product owner shall address any such "non-ESG body" warranty issues directly with their local chassis dealer and/or the manufacturer of the specific accessory, component or equipment with no further liability to ESG.

17. **WE MAKE NO OTHER WARRANTY, EXPRESS OR IMPLIED, AND MAKE NO WARRANTY OF MERCHANTABILITY OR FITNESS FOR ANY PARTICULAR PURPOSE.** Any improper use, operation beyond rated capacity, substitution of non-OEM parts not specifically approved by us in writing, or any alteration or repair by others in such manner as in our judgment affects the Product materially and adversely shall void this Warranty. NO EMPLOYEE OR REPRESENTATIVE OF ESG IS AUTHORIZED TO CHANGE THIS WARRANTY IN ANY WAY OR GRANT ANY OTHER WARRANTY, except as part of a definitive written agreement between the manufacturer and purchaser. The above warranty supersedes and is in lieu of all other warranties whether express or implied.

18. **NO DIRECT OR CONSEQUENTIAL DAMAGES.** ESG hereby disclaims and does not assume any liability whatsoever for costs or expenses related to the use or unavailability of its Product for any reason, including but not limited to accidents, injury, death, late delivery penalties, chassis flooring cost or charges, Product down time, fire damage, loss of Product, in-transit damage or loss, opportunity cost, lost profits, or any other direct, indirect or consequential losses, damages or delay, property damage or injuries or death to persons.

19. **OFF-SITE LOSS DISCLAIMER.** The Purchaser shall bear all risk for damage or loss to the purchaser-owned Product, chassis, accessories, or injury to property or persons, while the Product and/or chassis is either at ESG facilities, enroute to ESG facilities, at or enroute to/from a third party subcontractor of ESG's, in transit to or from Purchaser's or the chassis manufacturer's location, or to/from any third party Dealer or a component supplier's location.

20. **CHOICE OF LAW AND VENUE.** This agreement shall be interpreted according to the laws of the State of Tennessee. Any claims lodged against ESG involving this order in any way must be filed and adjudicated in the Circuit or Federal Court located in Hamilton County, Tennessee, and in the case of appeal, at the situs of their respective appellate Courts.

21. **NON-WAIVER.** Our failure at anytime to exercise any right we may have under this agreement shall not constitute a waiver thereof nor prejudice our right to enforce same thereafter.

22. **SECURITY INTEREST.** The Purchaser hereby grants a first priority purchase money security interest and lien to ESG in and to all Products and goods sold to Purchaser and to which these *Terms & Conditions of Sale* relate, to all chassis and trucks to which any such Products or goods become accessions, and to all Products, proceeds and accessions thereto, from time to time (collectively, the "Product Collateral") to secure all obligations of the Purchaser or any person or entity related to Purchaser, under any agreement, arrangement or financing with or provided by the Company, including without limitation, the obligation to pay the unpaid purchase price of all Products and goods from time to time sold by ESG to Purchaser (collectively, the "Obligations"). The Purchaser represents and warrants that none of the Product Collateral is subject to any other lien, security interest or claim of any type or nature, and covenants that it: (i) will not create or permit to exist any lien, security interest or claim in any portion of the Product Collateral in favor of any other person, (ii) will pay, prior to any delinquency, all taxes (including all property taxes), charges or other obligations which may be owing with respect to the Product Collateral from time to time, (iii) will not change its name, place of incorporation or creation, address or location of the Product Collateral without first providing ESG with not less than 30 days prior written notice, (iv) will take all steps requested by ESG to obtain and maintain the perfection of the security interests granted hereunder, (v) will keep the Product Collateral fully insured against destruction or damage in an amount up to its full insurable value, and will name ESG as additional insured and loss payee under all such insurance policies, and (vi) will cooperate with ESG upon any default of any of the Obligations and will, at the request of ESG, turn over and deliver all Product Collateral to or at the direction of ESG. Purchaser will, at ESG's request, execute such additional security agreements and amendments and additions thereto or hereto as ESG requests in order that it may have at all times a first priority purchase money security interest and lien securing the Obligations. Purchaser hereby authorizes ESG to file financing statements and amendments thereto in all relevant jurisdictions naming Purchaser as debtor and describing the Product Collateral as collateral.

23. **ENTIRE AGREEMENT.** Unless a prevailing purchase contract is in place between the parties hereto, this order, including the above Terms & Conditions of Sale, contains the complete and final agreement between the parties hereto and no Purchaser-supplied purchase order terms, verbal agreement, or other document in any way modifying or supplementing any of these terms and conditions will be binding on ESG unless agreed to in writing by an authorized representative of ESG.

Return to Index Page

WE NEVER STOP WORKING FOR YOU

HEIL ENVIRONMENTAL WARRANTY STATEMENT

The Heil Co. d/b/a Heil Environmental ("Heil") warrants its waste collection equipment to be free from defects in material and workmanship under normal single-shift use for a period of Twelve (12) months or 2000 hours of operation (whichever comes first) from the date of equipment In-Service or during the period of coverage offered by an extended warranty program, when operated in accordance with its *Operator's Manual* and proper service and maintenance as described in Heil *Service Bulletins* and *Parts & Service Manuals* are performed. The standard or extended equipment warranty is not transferable except for sales demonstration units.

This warranty is expressly limited to the repair or replacement of any component or part thereof, of any such collection body manufactured by Heil that is proven to Heil's satisfaction to have been defective in material or workmanship. Such components or parts shall be repaired or replaced at Heil's option without cost to the original purchaser for parts and labor provided such unit is returned to an authorized Heil Dealer for replacement or repair. The repair or replacement must be made during the standard or extended warranty coverage period.

Before any warranty can be allowed on new equipment, a validated warranty registration form must be on file with Heil's Customer Service Department within sixty (60) days of the equipment's In-Service date. Wear items are excluded from warranty coverage.

All OEM service parts sold by Heil have a six (6) month warranty from the date of purchase. Aftermarket parts purchased from Heil are supported by a 90-day warranty. The parts warranty covers parts only, providing that factory inspection reveals a defect in material or workmanship. Labor, troubleshooting, equipment downtime, etc. is not covered under the parts warranty policy.

HEIL MAKES NO OTHER WARRANTY, EXPRESSED OR IMPLIED, AND MAKES NO WARRANTY OF MERCHANTABILITY OR OF FITNESS FOR ANY PARTICULAR PURPOSE. HEIL DOES NOT ASSUME ANY LIABILITY OR ACCEPT CLAIMS FOR LOSS OF PROFITS, PRODUCT DOWN TIME OR ANY OTHER DIRECT, INCIDENTAL OR INDIRECT CONSEQUENTIAL LOSSES, COSTS, DAMAGES, OR DELAYS.

Any improper use, operation beyond rated equipment or component capacity, substitution of parts that are not Heil approved, or any alteration or repair by others in such a manner as in Heil's sole judgment affect the product operation or integrity shall void the warranty. Other than the extension of the standard warranty period purchased under a supplemental *Heil Extended Warranty Program*, no employee or representative is authorized to modify this warranty in any way nor shall any other warranties be granted. No dealer-supplied warranty program is endorsed or supported by Heil. Heil retains the right to modify its factory warranty program at any time.

HEIL SALES ORDER COVER PAGE

SF0377Y (9-1-17)

Submission Date:	Requested Delivery Date:	Order Submitted By:	Telephone #:

Pre-Approved Delivery Commitment Attached:	Curotto Can to be Ordered? / Curotto PO #	Heil Model:	Body Size: Cubic Yard / Roll Off: Length	Number of Units:

Customer P.O. No:	Regional Manager/KAM:	Discount:	Body Paint Code (DuPont Only):

Pilot Inspection or Unit Review? Date	Freight:	Ship Via:	NJPA:	HGAC:	Terms:

Unit Review? Date	Custom Form?	SPR Form Attached?	Customer Class:	NJPA Member ID #:

Heil Dealer Information		End-User Information	
Company Name:		Company Name:	
Contact Person:		Contact Person:	
Telephone:	Extension:	Telephone:	Extension:
e-mail Address:		e-mail Address:	
"Bill To" Address		**End User Address**	
Street / P.O. Box:		Street / P.O. Box:	
City:		City:	
State:	Zip:	State:	Zip:

Shipping Information		Chassis Dealer	
Delivery Location:		Company Name:	
Contact Person:		Contact Person:	
Telephone:	Extension:	Telephone:	Extension:
Street / P.O. Box:		Street / P.O. Box:	
City:		City:	
State:	Zip:	State:	Zip:

Expected Chassis Delivery Date:		Is This a Shipper Unit?	Match Cab and Body Paint?	Chassis Paint Code (DuPont Only):
Chassis Make:	Chassis Model/Year: /	Drive Type:	FRONT GAWR: REAR GAWR: GVWR: Usable CA/CT: Wheelbase:	Chassis Axle Type Required of Air Weigh Scales Install:
Engine Make: Engine Model:	Transmission Make: Transmission Model:	Engine Torque @ Idle: Operate @ Idle?		Chassis VIN : *Submit Full 17 Digit VIN # to Heil before Chassis Manufacturing Completion
Alternative Fuel? Yes Fuel Type CNrG Tailgate *Is FMM pre-installed on the chassis? No		Auxiliary Axle? Axle Configuration?	Exhaust Configuration: Note: Odyssey FEL Hydraulics Requires RHS Fuel & DEF Tanks. Automated Side Loaders Lift Location Requires LHS Fuel & DEF Tanks.	Is this a Heil Ready Truck Consignment Chassis? Shipment required within 30 days?

Please E-mail orders to Orders@doveresg.com

Return to Index Page

Environmental Solutions Group
A DOVER COMPANY

2019 - Rovver X System, Accessory, & Component Price List		
		Price
E-RX-SYS-Truck-Basic-18	Rovver X Basic Truck Package	**$76,226.50**
E-RX-SYS-PRO-18	Rovver X Pro Truck Package	**$83,230.00**
~~E-RX-SYS-PRO500-18~~	~~Rovver X Truck Pro Package with RAX500 Cable Reel~~	**~~$105,560.00~~**
E-RX-SYS-Portable-18	Rovver X Portable Package with RMX200 Cable Reel	**$60,392.50**
E-RX-SYS-Industrial-18	Rovver X Portable Package with RMX100 Cable Reel	**$60,900.00**
E-RX-SYS-Basic-400-18	Rovver X Basic Truck Package with RX400 Crawler	**$101,500.00**
E-RX-SYS-PRO-400-18	Rovver X Pro Truck Package with RX400 Crawler	**$134,995.00**
E-RX-SYS-SAT-ADD-Basic-18	Add on SAT System for Existing RX Pro Systems	**$98,455.00**
E-RX-SYS-SAT-ADD-PRO-18	Add on SAT System for Existing RX Basic Systems	**$81,200.00**
E-RX-SYS-SAT-18	Stand Alone RXSAT System with RAX300 Cable Reel	**$118,247.50**
E-RX-SYS-SAT-Combo-18	Combination RX Mainline and SAT System	**$149,205.00**
564-0900-04	RX Camera Elevator Kit, QCD	**$13,195.00**
559-0900-03	RX Aux Light w/ Rear Camera, QCD	**$3,755.50**
569-0900-00	RX Carriage	**$10,454.50**
080-0701-00	Wheel D85x18 / d12 QCD (small rubber)	**$228.38**
080-0702-00	Wheel D120x31 / d12 QCD (Med rubber)	**$268.98**
080-0703-00	Wheel D150x52 / d12 QCD (Lg rubber)	**$268.98**
080-0704-00	Wheel D175x88 / d12 QCD (XXL Rubber)	**$532.88**
080-0705-00	ELKA Wheel D85x18 / d12 QCD (Sm Grease)	**$258.83**
080-0706-00	ELKA Wheel D120x31 / d12 QCD (Med Grease)	**$329.88**
080-0707-00	ELKA Wheel D150x52 / d12 QCD (Lg Grease)	**$375.55**
080-0709-00	HMS Wheel D85x18 / d12 QCD (Sm Aggressive)	**$431.38**
080-0710-00	HMS Wheel D145x52 / d12 QCD (Lg Aggressive)	**$583.63**
080-0711-00	HMS Wheel D120x31 / d12 QCD (Md Aggressive)	**$568.40**
080-0712-00	Climbing (Middle Wheel)	**$157.33**
586-0920-00	DCX5000 Controller incl. CCUI	**$21,315.00**
598-0900-00	VC500 with Vision Report Software	**$11,926.25**
536-0900-05	RX140SAT Crawler QCD	**$42,630.00**
555-0900-03	RX95 Crawler QCD	**$13,195.00**
560-0900-06	RX130 Crawler QCD	**$18,777.50**
585-0900-04	RX400 Crawler QCD incl 2 sets wheels	**$53,795.00**
554-0900-03	Axial Camera RAC50	**$5,075.00**
561-0900-04	RCX90 Camera	**$24,360.00**
581-0900-05	PTP70II Camera (does not include spring or crawler connector)	**$14,210.00**
558-0200-02	Camera to Crawler adaptor for PTP70II	**$1,903.13**
581-0800-04	Spring Connector for PTP70II for SAT / Agilios	**$2,233.00**
592-0900-02	AC52 Camera	**$7,308.00**
595-0900-00	PTP50 SAT/Agilios Camera	**$13,195.00**
595-0960-00	PTP50 RX Camera	**$13,195.00**
596-0900-02	AC40 Camera	**$4,872.00**
551-0900-01	RMX100 Manual Reel w/ 100M Cable	**$13,398.00**
562-0900-03	RAX300 Cable Reel w/ 300M Cable	**$27,405.00**
563-0900-01	RMX200 Manual Reel w/ 200M Cable	**$14,210.00**

589-0900-01	RAXSAT150 Cable Reel	**$37,555.00**
590-0900-02	RAX500 Cable Reel w/ 500M Cable	**$42,630.00**
573-0902-00	Laser Shape Scanner LSS RCX90	**$10,150.00**
RX-Digisewer	DigiSewer Camera & Software Package	**$38,062.50**
571-0900-00	Ring laser DS3 for RX DigiSewer	**$7,612.50**
597-0900-01	Camera Adapeter RCC90 QCD	**$5,582.50**
E-V-SYS-SPP-009	Verisight Pro Push Camera 200'	**$9,986.25**
E-V-SYS-SPP-109	Verisight Pro Push Camera 330'	**$10,911.25**
E-QV-SYS-AIRHD	Quickview Air HD Camera	**$15,225.00**
E-JET-SYS-8	JetScan HD Video Nozzle	**$12,941.25**
E-030-0900-00	CleverScan Manhole Camera	**$71,050.00**

U.S.A.

TRACKLESS SERIES MT7

August 01, 2018

Suggested H-GAC U.S. Retail Price

5% Discount Applies off of the List Price

MT7	74 hp Tractor with 16" Radials (LT245/75R)	LIST PRICE	$	132,403.00

Air conditioning, heat, cab pressurizer, climate control,
8 Amber strobes w/ branch guard, Extra pump & valve,
Reversing engine fan, LED tail & marker lights, F-N-R joystick,
Intermittent front wiper, Backup camera, Battery disconnect swtich
Articulation lock, Remote Battery terminal, Low hyd. oil warning,
Ride control, Cruise control, Hi/low beam headlights, Rear wiper/washer

All of the above is standard on the MT7

TIRE OPTIONS FOR TRACTOR

OPTW02	Summer tires (31 x 13.5 x 15)	add to list price	$	897.00
OPTW01	Dual loader lug tires	add to list price	$	3,524.00
OPTW03	Single loader lug tires of front w/ dual on rear only (L.L.)	add to list price	$	1,762.00
OPTW11	Calcium filled tires	add to list price	$	306.00
OPTW11-1	Calcium filled tires in tubes	add to list price	$	306.00

TRACTOR OPTIONS

OPB05	Rear PTO	$	6,203.00
Z3PT	Rear three point hitch (crated)	$	3,877.00
OPB02	Deep reduction transfer case (only avail if ordered with tractor)	$	8,757.00
OPDT13-2	Locking differentials	$	2,163.00
OPL02-1	Additional high mount tail lights on rear of cab	$	390.00
OPEC49	Automatic night time white noise backup alarm	$	359.00
OPM70	WIFI Diagnostic package. No monthly or annual fees	$	628.00
OPB04-7	Rear dump body with front counterweights (requires Opt 16 AND Opt 4 OR Opt 5)	$	7,754.00
OPM39	Data collectin / GPS connector	$	633.00
OPCE08	Rear license plate bracket and light	$	253.00
OPM08	Tow behind sander pkg includes hitch, electric brake control, trailer connector	$	1,846.00
OPB06-2	Break-in filter kit	$	426.00
OPCI15-2	2 1/2lb. Fire extinguisher	$	195.00
OPEC13	Locking hoods	$	422.00
OPCI04	Sun visor	$	274.00
OPL24	LED headlights & work light	$	570.00
OPCI16	First aid kit	$	100.00
OPL17-3	LED work light	$	343.00
OPL21	Guards on all lights	$	501.00
OPH02	Dust caps on all couplers	$	158.00
OPH04	Reversing motor spool	$	897.00
OPCEI13-1	Roof guard	$	422.00
OPCI03	Extra keys	$	11.00

TRACKLESS SERIES MT7

Suggested H-GAC U.S. Retail Price
5% Discount Applies off of the List Price

TIRES & RIMS PURCHASED SEPARATELY FROM TRACTOR

ZTW5R	Radial tire (LT245/75R)		$	311.00
ZWW5RTD	16" rim for radial tire		$	148.00
ZTW510GI	Loader lug tire 10.00 x 16.5 6-ply		$	243.00
ZWW5R	16.5" rim for loader lug		$	148.00
ZTS5C	Summer tire 31 x 13.5 x 15		$	396.00
ZSW5	15" rim for summer tire		$	232.00
OPTW17	Dual loader lug tires & rims (8 tires with rims and hardware)		$	5,381.00

WINTER ATTACHMENTS

Z51B	51" snowblower with sidewalk chute		$	10,418.00
Z51GRB	51" ribbon snow blower w/ sidewalk chute		$	17,059.00
Z60B	60" snowblower with sidewalk chute		$	10,582.00
Z60GRB	60" ribbon snowblower w/ sidewalk chute		$	18,278.00
Z75RB	75" ribbon snowblower w/telescopic chute		$	28,221.00
Z70B	70" snowblower with sidewalk chute		$	10,793.00
Z80B	80" snowblower with sidewalk chute		$	12,581.00
	Truck chute in lieu of sidewalk chute	add	$	739.00
ZLCH	Truck loading chute complete		$	1,772.00
ZTLCH	Telescopic Truck loading chute complete (MT7 only)		$	5,381.00
ZAB5	5 ft angle plow	less attaching kit	$	2,543.00
ZABDT	5 ft double trip plow	less attaching kit	$	3,756.00
ZAB6	6 ft angle plow	less attaching kit	$	2,769.00
ZAB7	7 ft angle plow	less attaching kit	$	3,576.00
ZAB8	8 ft angle plow	less attaching kit	$	3,840.00
ZAK	Angle plow attaching kit		$	3,292.00
ZFSPA	Front sander/plow	complete	$	10,128.00
ZVP	Sidewalk V plow	complete	$	4,906.00
ZVPH	5 position folding plow	complete	$	7,237.00
ZHS	Rear salt & sand spreader with single agitator		$	7,353.00
ZHSDI	Rear salt & sand spreader with triple agitator		$	8,625.00
ZTBS	Tow behind sander with brakes 1-1/4 yd capacity (requires Opt 44)		$	16,142.00
ZWTBR	Rear brine spray tank with pump and spray bar		$	4,357.00

TRACKLESS SERIES MT7

Suggested H-GAC U.S. Retail Price
5% Discount Applies off of the List Price

MOWING ATTACHMENTS

ZFM	74" front flail mower	$	11,246.00
ZB457-1	Boom flail (requires dual loader lug tires)	$	32,863.00
ZRM6	72" rotary finishing mower	$	7,200.00
ZRM10	120" rotary finishing mower	$	18,674.00
ZRM14	168" rotary finishing mower	$	21,628.00
ZRM14P	168" Progressive mower	$	26,270.00

ASPHALT ATTACHMENTS

ZCP	Cold planer w/ standard drum	$	24,712.00
ZCPR	Cold planer w/ Ranjo drum	$	30,215.00
	(both cold planers require: Opt 9 deep reduction)		

SWEEPERS AND SPRAY SYSTEMS

ZPAS	60" x 32" dia angle sweeper	$	7,491.00
ZPAS6	72" x 32" dia angle sweeper	$	7,913.00
ZPAS7	84" x 32" dia angle sweeper	$	8,335.00
ZPAS8	96" x 32" dia angle sweeper	$	10,297.00
ZPUS	48" pickup sweeper	$	8,387.00
ZWT	Water tank and pump kit for all sweepers	$	3,877.00
ZPASB-1	Spray bar kit for angle sweeper	$	243.00
ZPUSB-1	Spray bar kit for pickup sweeper	$	159.00
	14 ft rear mounted spray boom	$	1,372.00

AERATOR, FRONT END LOADER, LEAF LOADER

ZAER	Aerator	$	11,922.00
ZFL49	Front end loader with 49" wide bucket	$	10,867.00
ZFL77	Front end loader with 77" wide bucket	$	10,867.00
ZSG	Stump Grinder	$	14,084.00
ZLFL	Leaf loader complete	$	43,572.00
	(requires 1/2 set of dual tire, loader lugs tires on front & reversing motor spool valve)		
ZASPH	Infrared asphalt heater (requires generator)	$	18,278.00
ZGEN	Generator with security fence	$	14,876.00
	Buffalo Turbine Debris Blower	$	7,280.00

Notes:

- Freight charges apply to options purchased without base tractor.
- PDI charges may apply to options purchased without base tractor if installation is needed.
- 5% discount applies off of list price

SPARTAN 2020 PRICE LIST

			List Price
BASE PRICE			$ 68,804.0
	CAPACITY OPTIONS	(select only one)	$ -
[ ] 40100	**Standard 15 Yard Capacity**		$ -
[ ] 40110	20 Yard Capacity		$ 2,285.0
[ ] 40111	25 Yard Capacity		$ 4,633.0
[ ] 40112	30 Yard Capacity		$ 7,004.0
			$ -
	JACK OPTIONS	(select only one)	$ -
[ ] 40150	**Manual Jack**		
[ ] 40152	Hydraulic Jack		$ 1,406.9
			$ -
	ENGINE OPTIONS	(select only one)	$ -
[ ] 40205	**74 HP Kubota V3800 Tier 4 Diesel Engine**		
[ ] 40201	74 HP Kohler 2504 Tier 4 Diesel Engine		$ 1,399.6
[ ] 40204	120 HP Kohler 3404 Tier 4 Diesel Engine		$ 15,451.2
			$ -
	FUEL TANK	(select only one)	$ -
[ ] 40251	**50 Gallon Aluminum Tank**		
			$ -
	FAN OPTIONS	(select only one)	$ -
[ ] 40300	**Standard Fan**		
			$ -
	ENGINE COUPLER OPTIONS	(select only one)	$ -
[ ] 40350	**Heavy Duty Hand Clutch**		
[ ] 40351	KFBD Transfluid Coupler		$ 3,220.1
			$ -
	COLLECTION HOSE OPTIONS	(select only one)	$ -
[ ] 40501	**Flx-Thane VHD Clear Urethane Hose (.06" Thick)**		
[ ] 40500	Heavy Duty Industrial Rubber Hose		$ 566.1
			$ -
	Additonal Options	(select only one)	$ -
[ ] 40703	Directional Light Bar		$ 1,372.0
[ ] 40705	Wireless Camera System, not installed		$ 890.0
	Additional Camera @ $389 each QTY [ ] x		$ 389.0
[ ] 40706	Dust Control System (95 gallon)		$ 2,310.0
[ ] 40706-190	Dust Control System (190 gallon)		$ 3,133.7
[ ] 40707	Fuel Sending Unit with Gauge		$ 139.0
[ ] 40708	Tool Rack		$ 355.0
[ ] 40710	Spare Tire		$ 514.9
[ ] 40711	Elbow Liner		$ 653.0
[ ] 40713	Clean-Out Door		$ 458.0

[ ] 40714	Operator's Hood Installed	$ 356.
[ ] 40715	Complete Containment Hood Installed (15 Yard)	$ 2,940.
[ ] 40716	Complete Containment Hood Installed (20 Yard)	$ 3,276.
[ ] 40717	Complete Containment Hood Installed (25 yard)	$ 3,535.
[ ] 40718	Complete Containment Hood Installed (30 Yard)	$ 4,260.
[ ] 40719	Tarp Rods only Installed	$ 574.
[ ] 40720	Tarp Rods and Tarp Installed	$ 785.
		$ -
	Boom Options (select only one)	$ -
[ ] 40800	**Underslung Boom**	
[ ] 40801	Overhead Boom pro	$ -
[ ] 4080*	Overhead Boom pro+	$ -
	PRO+ HYDRAULIC PICKUP OPTIONS (select only one)	$ -
[ ] 40907	Proportional Controls With Seat	$ 13,986.
[ ] 40908	Wireless Proportional Controls With Seat	$ 17,853.
		$ -
	SEAT OPTIONS (select only one)	$ -

TITAN 2020 COST SHEET

			List Price
BASE PRICE			$ 45,557.60
	TONGUE OPTIONS	(select only one)	
[ ] 10100	Standard Telescoping Tongue		
[ ] 10120	Drivers Side Pickup		$ 2,600.00
	JACK OPTIONS	(select only one)	
[ ] 10150	Manual Jack		
[ ] 10151	Manual Jack with Caster Wheel		$ 360.00
[ ] 10152	Hydraulic Jack with Caster Wheel		$ 1,393.00
	ENGINE OPTIONS	(select only one)	
[ ] 10205	74 HP Kubota V3800 Tier 4 Diesel Engine		
[ ] 10201	74 HP Kohler 2504 Tier 4 Diesel Engine		$ 1,405.44
[ ] 10203	99 HP John Deere Tier 4 Diesel Engine		$ 16,894.80
[ ] 10204	120 HP Kohler 3404 Tier 4 Diesel Engine		$ 15,312.00
	FUEL TANK	(select only one)	
[ ] 10251	50 Gallon Aluminum Tank		
	FAN OPTIONS	(select only one)	
[ ] 10300	30" Fan		
[ ] 10301	32" Fan		$ 237.00
	ENGINE COUPLER OPTIONS	(select only one)	
[ ] 10350	Heavy Duty Hand Clutch		
[ ] 10351	KFBD Transfluid Coupler		$ 3,251.71
	DISCHARGE NOZZLE OPTIONS	(select only one)	
[ ] 10400	Rigid with 4' HD Rubber Hose		
[ ] 10401	Swivel Discharge- All Steel		$ 1,510.00
[ ] 10402	Swivel Discharge- with 4' HD Rubber Hose		$ 1,950.00
[ ] 10403	Rigid with 4' Flx-Thane VHD .06" Hose	Deduct	$ (225.00)
	COLLECTION HOSE OPTIONS	(select only one)	
[ ] 10501	Flx-Thane VHD Clear Urethane Hose (.06" Thick)		
[ ] 10500	Heavy Duty Industrial Rubber Hose		$ 566.10
	Additional Options	(select only one)	
[ ] 10703	Directional Light Bar		$ 1,372.00
[ ] 10704	Strobe Light		$ 389.00
[ ] 10705	Wireless Camera System, not Installed		$ 890.00
	Additional Camera @ $389 each QTY [ ] x		$ 389.00
[ ] 10706	Dust Control System		$ 1,950.00
[ ] 10707	Fuel Sending Unit with Gauge		$ 139.00
[ ] 10708	Tool Rack		$ 355.00
[ ] 10710	Spare Tire		$ 490.00
[ ] 10711	Elbow Liner		$ 327.00
[ ] 10713	Clean-Out Door		$ 458.00
	Boom Options	(select only one)	
[ ] 10800	Underslung Boom		
[ ] 10801	Overhead Boom		
	PRO+ HYDRAULIC PICKUP OPTIONS	(select only one)	
[ ] 20905	Wireless Proportional Controls With Seat		$ 17,853.00
[ ] 20907	Proportional Controls With Seat		$ 13,986.00
	SEAT OPTIONS	(select only one)	

ACCUBRINE®
automated brine maker
NXT

ACCUBRINE®
blending system

New Unit Name	NJPA Price
Accubrine NXT	$ 59,000.00
NXT w/Truck Fill	$ 81,500.00
NXT w/Truck Fill & 1 Additive	$ 94,000.00
NXT w/Truck Fill & 2 Additives	$101,000.00
NXT w/Truck Fill & 3 Additives	$108,000.00
OffLoad Option	$ 1,750.00
Stand Alone Truck Fill	$ 46,000.00

Stand Alone Truck Fill with Blending System

	NJPA Price
SATF & 1 Additive	$53,000.00
SATF & 2 Additives	$60,000.00
SATF & 3 Additives	$67,500.00

****** The AccuBrine NXT-Gen brine maker, truck fill and blending systems come standard with 3 phase electric.*** **Please see options page if interested in single phase electric system.**

Freight: FOB Hebron, KY

All Accubrine NXT systems and options must be installed by a Cargill Representative or a Factory Trained Representative

Installation Costs will be quoted by a Cargill Representative or a Cargill dealer Representative

Important: The customer will also be given a list of pre-installation guidelines. These are things the customer needs to have in place before an Accubrine system can be installed. The guidelines on this list are the sole responsibility of the customer.

Options

Quantity	Item Description	Part Number	Description	Price
	Single Phase Electrical Option Kit for NXT GEN Brinemaker Only		Single to three phase electrical convertor	$ 4,020.00
	Single Phase Electrical Option Kit for NXT GEN Brinemaker and Truck Fill/blending Unit		Single to three phase electrical convertor	$ 8,800.00
	Single Phase Electrical Option Kit Stand Alone NXT GEN Truck Fill/blending Unit		Single to three phase electrical convertor	$ 4,800.00
	Off Load Kit for Truck Fill Unit			$ 1,734.00
	Salt Tank	100011548 (BM-001)	Fiberglass salt tank	$ 20,000.00
	2" Storage Tank Fitting Kit	100011584 (BM-018)	2" tank flange, 2" ball valve, manifold hose barbs *Clamps and gaskets included.	$ 330.00
	3" Storage Tank Fitting Kit	100011737 (BM-079)	3" tank flange, 3" ball valve, manifold hose barbs *Clamps and gaskets included.	$ 612.00
	300 GPM Pump Kit - Price does not inlcude installation - (see below*)	100011741 (BM-083)	Pump, motor control with overload, starter, and circuit breaker 3 phase	$ 7,000.00
	Single phase electric Recycled Water Kit and Dilute Isolation Kit (Price does not include installation)		Pump, motor starter circuitry, 3-way valve, level sensor, hose barbs and logic control, fittings for splitting dilute water	$ 9,155.00
	Three phase electric Recycled Water Kit and Dilute Isolation Kit (Price does not include installation)		Pump, motor starter circuitry, 3-way valve, level sensor, hose barbs and logic control, fittings for splitting dilute water	$ 8,211.00

Quantity	Item Description	Part Number	Description	Price
	Accubatch™	110008945	Single phase electric system with salt tank, brine tank and stainless steel deflector shield.	$ 29,000.00

Freight: FOB Hebron, KY

STATE OF MICHIGAN
CENTRAL PROCUREMENT SERVICES

Department of Technology, Management, and Budget
525 W. ALLEGAN ST., LANSING, MICHIGAN 48913
P.O. BOX 30026 LANSING, MICHIGAN 48909

CONTRACT CHANGE NOTICE

Change Notice Number **3**

to

Contract Number **071B7700091**

CONTRACTOR	
	BELL EQUIPMENT CO
	78 Northpointe Drive
	Lake Orion, MI 48359
	James Bell
	248-370-0000
	jbell@bellequip.com
	CV0022702

STATE			
	Program Manager	Scott Poyer	SW
		517-284-6448	
		poyers@Michigan.gov	
	Contract Administrator	Yvon Dufour	DTMB
		(517) 249-0455	
		dufoury@michigan.gov	

CONTRACT SUMMARY

CONSTRUCTION EQUIPMENT PURCHASE & RENTAL

INITIAL EFFECTIVE DATE	INITIAL EXPIRATION DATE	INITIAL AVAILABLE OPTIONS	EXPIRATION DATE BEFORE
January 13, 2017	January 12, 2021	2 - 1 Year	January 12, 2021

PAYMENT TERMS	DELIVERY TIMEFRAME

ALTERNATE PAYMENT OPTIONS			EXTENDED PURCHASING	
☐ P-Card	☐ PRC	☐ Other	☒ Yes	☐ No

MINIMUM DELIVERY REQUIREMENTS

DESCRIPTION OF CHANGE NOTICE

OPTION	LENGTH OF OPTION	EXTENSION	LENGTH OF EXTENSION	REVISED EXP. DATE
☐		☐		January 12, 2021

CURRENT VALUE	VALUE OF CHANGE NOTICE	ESTIMATED AGGREGATE CONTRACT VALUE
$2,500,000.00	$1,000,000.00	$3,500,000.00

DESCRIPTION

Effective 2/18/2020, this contract is hereby increased by $1,000,000. All other terms, conditions, specifications, and pricing remain the same. Per agency request, DTMB Procurement approval, and State Administrative Board approval on 2/11/2020.

STATE OF MICHIGAN
CENTRAL PROCUREMENT SERVICES

Department of Technology, Management, and Budget

525 W. ALLEGAN ST., LANSING, MICHIGAN 48913
P.O. BOX 30026 LANSING, MICHIGAN 48909

CONTRACT CHANGE NOTICE

Change Notice Number **2**

to

Contract Number **071B7700091**

CONTRACTOR	
	BELL EQUIPMENT CO
	78 Northpointe Drive
	Lake Orion, MI 48359
	James Bell
	248-370-0000
	jbell@bellequip.com
	CV0022702

STATE			
	Program Manager	Scott Poyer	SW
		517-284-6448	
		poyers@Michigan.gov	
	Contract Administrator	Yvon Dufour	DTMB
		(517) 249-0455	
		dufoury@michigan.gov	

CONTRACT SUMMARY

CONSTRUCTION EQUIPMENT PURCHASE & RENTAL

INITIAL EFFECTIVE DATE	INITIAL EXPIRATION DATE	INITIAL AVAILABLE OPTIONS	EXPIRATION DATE BEFORE
January 13, 2017	January 12, 2021	2 - 1 Year	January 12, 2021

PAYMENT TERMS	DELIVERY TIMEFRAME

ALTERNATE PAYMENT OPTIONS			EXTENDED PURCHASING	
☐ P-Card	☐ PRC	☐ Other	☒ Yes	☐ No

MINIMUM DELIVERY REQUIREMENTS

DESCRIPTION OF CHANGE NOTICE

OPTION	LENGTH OF OPTION	EXTENSION	LENGTH OF EXTENSION	REVISED EXP. DATE
☐		☐		January 12, 2021

CURRENT VALUE	VALUE OF CHANGE NOTICE	ESTIMATED AGGREGATE CONTRACT VALUE
$2,500,000.00	$0.00	$2,500,000.00

DESCRIPTION

Effective 5/30/2019, pricing on this contract hereby updated, per revised Schedules C3, E1, and E4 (attached). All other terms, conditions, specifications and pricing remain the same. Per contractor request, and DTMB Procurement approval.

Spaulding Mfg., Inc.

5366 East Road Saginaw, MI 48601 Phone: 989-777-4550 Fax: 989-777-7430

Crack Sealer Technical Datasheet

Technical Data

- 125 and 225 Gallon Kettle
- 125,000 Minimum BTU Diesel or Propane Fuel Source
- Automatic Temperature Control
- Material / Oil / Hose All Seperate Digital Control Temperature
- On Demand Pumping System
- 12 Volt Battery
- 110 Volt Heated Hose
- Diesel Motor Powered Hydraulics
- Full 360 Degree Hydraulic Powered Floor Sweep Agitator
- Splash Proof Kettle Loading Door
- Tandem Axles
- Trailer Frame Steel - 5" Channel
- 8 Bolt Commercial Wheels
- Torsion Axles
- Kettle - Fully Insulated and Oil Jacketed
- Triple Wall Construction
- Kettle Floor 1/4" Steel
- Heated Rear Cabinet
- All Wiring External to Hopper
- Paint: Sandblasted with Two Coats of Epoxy Primer and Urethane Finish
- 125 Gallon 7,000 lbs. GVWR
- 225 Gallon 9,000 lbs. GVWR
- Length: Varies Upon Options Specified
- Width: 125 Gallon 85" 225 Gallon 90"
- Height:125 Gallon 83" 225 Gallon 87"
- NATM compliant
- Operating Controls Located on Curbside Wherever Possible
- Many Options Available

* 225 Gallon with Noise Reducing Engine Cover

5366 East Road Saginaw, MI 48601 Phone: 989-777-4550 Fax: 989-777-7430

CONTRACT # 071B7700091 - AWARDED SPECIFICATIONS FOR PURCHASE				
Spec #	EQUIPMENT MAKE & MODEL:	EQUIPMENT CATEGORY	Quoted Price	Hourly rate for training (per Schedule A, Statement of Work, section A.,3.3)
22	C62-0051-16 Street Sweeper - Elgin/Autocar	Sweeper	$324,516.75	$100.00
NON-AWARDED SPECIFICATIONS FOR PURCHASE				
21	C60-2001-16 Sand-Salt Spreader - Epoke 4902	SPREADER	$109,784.00	$100.00

Catalog Pricing For PURCHASE

Epoke Spreaders

Item #	EQUIPMENT MAKE & MODEL:	EQUIPMENT CATEGORY	MSRP	% Discount Off MSRP	Discount	Set-Up Fees	Total Cost (With setup & delivery included)
	BULK SPREADERS						
1	Epoke 3800 SMALL	SPREADER	68,130.00	3%	$ 2,043.90	4,500.00	$ 70,586.10
2	Epoke 3800 MEDIUM	SPREADER	71,685.00	3%	$ 2,150.55	4,500.00	$ 74,034.45
3	Epoke 3800 LARGE	SPREADER	74,525.00	3%	$ 2,235.75	4,500.00	$ 76,789.25
4	Epoke 3800 2T SMALL	SPREADER	88,690.00	3%	$ 2,660.70	4,500.00	$ 90,529.30
5	Epoke 3800 2T MEDIUM	SPREADER	92,245.00	3%	$ 2,767.35	4,500.00	$ 93,977.65
6	Epoke 3800 2T LARGE	SPREADER	95,085.00	3%	$ 2,852.55	4,500.00	$ 96,732.45
7	Epoke 4900 SMALL	SPREADER	72,280.00	3%	$ 2,168.40	4,500.00	$ 74,611.60
8	Epoke 4900 MEDIUM	SPREADER	75,415.00	3%	$ 2,262.45	4,500.00	$ 77,652.55
9	Epoke 4900 LARGE	SPREADER	76,905.00	3%	$ 2,307.15	4,500.00	$ 79,097.85
10	Epoke 4902 SMALL	SPREADER	84,550.00	3%	$ 2,536.50	4,500.00	$ 86,513.50
11	Epoke 4902 MEDIUM	SPREADER	87,685.00	3%	$ 2,630.55	4,500.00	$ 89,554.45
12	Epoke 4902 LARGE	SPREADER	89,175.00	3%	$ 2,675.25	4,500.00	$ 90,999.75
13	Epoke Virtus 1,980 Gallon	SPREADER	97,710.00	3%	$ 2,931.30	6,500.00	$ 101,278.70
14	Epoke Virtus 2,640 Gallon	SPREADER	102,260.00	3%	$ 3,067.80	6,500.00	$ 105,692.20
15	Epoke Virtus 3,300 Gallon	SPREADER	106,810.00	3%	$ 3,204.30	6,500.00	$ 110,105.70
16	Epoke Virtus 4,000 Gallon	SPREADER	111,360.00	3%	$ 3,340.80	6,500.00	$ 114,519.20
17	Epoke Virtus 4,600 Gallon	SPREADER	117,555.00	3%	$ 3,526.65	6,500.00	$ 120,528.35
18	Epoke Virtus AST Kit	SPREADER	49,625.00	3%	$ 1,488.75	6,500.00	$ 54,636.25
19	Epoke Virtus City AST Kit	SPREADER	60,180.00	3%	$ 1,805.40	6,500.00	$ 64,874.60
20	Epoke Igloo 2300 - 1.0 Yard	SPREADER	20,845.00	3%	$ 625.35	6,500.00	$ 26,719.65
21	Epoke Igloo 2300 - 1.4 Yard	SPREADER	22,180.00	3%	$ 665.40	4,500.00	$ 26,014.60
22	Epoke Igloo 2300 - 1.8 Yard	SPREADER	23,520.00	3%	$ 705.60	4,500.00	$ 27,314.40
23	Epoke Igloo 2400 - .8 Yard	SPREADER	27,785.00	3%	$ 833.55	4,500.00	$ 31,451.45
24	Epoke Igloo 2400 - 1.0 Yard	SPREADER	29,140.00	3%	$ 874.20	4,500.00	$ 32,765.80
25	Epoke Igloo 2400 - 1.4 Yard	SPREADER	30,475.00	3%	$ 914.25	4,500.00	$ 34,060.75
26	Epoke Igloo 2400 - 1.8 Yard	SPREADER	31,825.00	3%	$ 954.75	4,500.00	$ 35,370.25
	TOWED SPREADERS						
27	Epoke Mini 5	SPREADER	1,360.00	5%	$ 68.00	$0.00	$ 1,292.00
28	Epoke Mini 20	SPREADER	3,170.00	5%	$ 158.50	$0.00	$ 3,011.50
29	Epoke ITM35	SPREADER	5,575.00	5%	$ 278.75	$0.00	$ 5,296.25
30	Epoke ITM45	SPREADER	8,020.00	5%	$ 401.00	$0.00	$ 7,619.00
31	Epoke ITM60	SPREADER	8,370.00	5%	$ 418.50	$0.00	$ 7,951.50
32	Epoke PM1.4	SPREADER	5,940.00	5%	$ 297.00	$0.00	$ 5,643.00
33	Epoke PMH1.4	SPREADER	5,185.00	5%	$ 259.25	$0.00	$ 4,925.75
34	Epoke SKE8	SPREADER	17,135.00	5%	$ 856.75	$0.00	$ 16,278.25
35	Epoke SKE15	SPREADER	22,810.00	5%	$ 1,140.50	$0.00	$ 21,669.50
36	Epoke SKE20	SPREADER	24,670.00	5%	$ 1,233.50	$0.00	$ 23,436.50
37	Epoke TKB12-280	SPREADER	22,375.00	5%	$ 1,118.75	$0.00	$ 21,256.25
38	Epoke TMK10-275	SPREADER	19,175.00	5%	$ 958.75	$0.00	$ 18,216.25
39	Epoke PSL 6.5	SPREADER	11,590.00	5%	$ 579.50	$0.00	$ 11,010.50
40	Epoke TP3	SPREADER	29,275.00	5%	$ 1,463.75	$0.00	$ 27,811.25

41	Epoke TP9	SPREADER	33,895.00	5%	$ 1,694.75	$0.00	$ 32,200.25

NOTES:

1. Price is for base unit only. See Schedule C1 for Epoke brochures.

2. Prices do not include any option content. See ***Schedule E2*** *for Epoke option pricing. All option pricing is subject to the 3% and 5% discount.*

3. Set-Up Fees are for mounting and installation on customer supplied chassis, where applicable.

Elgin Sweepers

Item #	EQUIPMENT MAKE & MODEL:	EQUIPMENT CATEGORY	MSRP	% Discount Off MSRP	Discount	Set-Up Fees & Delivery	Total Cost (With setup & delivery included)
42	Elgin Pelican - Single	SWEEPER	193,125.00	3.0%	$ 5,793.75	$1,270.70	$ 188,601.95
43	Elgin Pelican - Dual	SWEEPER	204,250.00	3.0%	$ 6,127.50	$1,270.70	$ 199,393.20
44	Elgin Waterless Pelican	SWEEPER	248,750.00	3.0%	$ 7,462.50	$1,270.70	$ 242,558.20
45	Elgin Broom Bear (Purchase of this item is for MDOT Only)	SWEEPER	155,625.00	8.0%	$ 12,450.00	$1,270.70	$ 144,445.70
46	Elgin Road Wizard	SWEEPER	183,875.00	3.0%	$ 5,516.25	$1,270.70	$ 179,629.45
47	Elgin Broom Badger	SWEEPER	133,815.00	3.0%	$ 4,014.45	$1,270.70	$ 131,071.25
48	Elgin Eagle	SWEEPER	177,500.00	3.0%	$ 5,325.00	$1,270.70	$ 173,445.70
49	Elgin Waterless Eagle (Purchase of this item is for MDOT Only)	SWEEPER	222,250.00	12.0%	$ 26,670.00	$1,270.70	$ 196,850.70
50	Elgin Whirlwind - Single	SWEEPER	159,250.00	3.0%	$ 4,777.50	$1,270.70	$ 155,743.20
51	Elgin Whirlwind - Dual	SWEEPER	173,375.00	3.0%	$ 5,201.25	$1,270.70	$ 169,444.45
52	Elgin Crosswind (Purchase of this item is for MDOT Only)	SWEEPER	131,910.00	10.5%	$ 13,850.55	$1,270.70	$ 119,330.15
53	Elgin Megawind, 10CY, CB Cleaner Only* (Purchase of this item is for MDOT Only)	SWEEPER	162,250.00	11.5%	$ 18,658.75	$1,270.70	$ 144,861.95
54	Elgin Megawind, 10CY - Single* (Purchase of this item is for MDOT Only)	SWEEPER	187,375.00	10.5%	$ 19,674.38	$1,270.70	$ 168,971.33
55	Elgin Megawind, 10CY - Dual* (Purchase of this item is for MDOT Only)	SWEEPER	203,500.00	10.0%	$ 20,350.00	$1,270.70	$ 184,420.70
56	Elgin Megawind, 13CY, CB Cleaner Only* (Purchase of this item is for MDOT Only)	SWEEPER	168,625.00	11.3%	$ 19,054.63	$1,270.70	$ 150,841.08
57	Elgin Megawind, 13CY - Single* (Purchase of this item is for MDOT Only)	SWEEPER	193,750.00	10.3%	$ 19,956.25	$1,270.70	$ 175,064.45
58	Elgin Megawind, 13CY - Dual* (Purchase of this item is for MDOT Only)	SWEEPER	211,125.00	9.8%	$ 20,690.25	$1,270.70	$ 191,705.45

NOTES:

1. Price is for sweeper module only. Does not include truck chassis, if applicable. See Schedule C2 for Elgin brochures.

2. Prices do not include any option content. See ***Schedule E3*** *for Elgin option pricing. All option pricing is subject to the 3% discount.*

Spaulding Asphalt Equipment

Item #	EQUIPMENT MAKE & MODEL:	EQUIPMENT CATEGORY	Discount Pricing	Set-Up Fees	Total Cost (With setup & delivery included)
65	Spaulding Oil Jacketed 125 Gallon Crack Sealer	Asphalt Sealing	58,000.00	NA	$ 58,000.00
66	Spaulding Oil Jacketed 225 Gallon Crack Sealer	Asphalt Sealing	60,000.00	NA	$ 60,000.00

NOTES:

1. Pricing is for base unit only and does not include any option content. See ***Schedule E4*** *for Spaulding option pricing. See Schedule C3 for Spaulding brochures.*

Addco Equipment

Item #	EQUIPMENT MAKE & MODEL:	EQUIPMENT CATEGORY	Discount Pricing	Set-Up Fees	Total Cost (With setup & delivery included)
67	Addco PTS-2000 Portable Traffic Signal System	Portable Traffic Signal	74,100.00	NA	$74,100.00
	OPTIONS				
69	Doppler radar motion sensors (TC26B) (PTS-2000 only)		2,400.00	Included	$2,400.00
70	GPS monitoring system (PTS-2000 only)		1,400.00	Included	$1,400.00
71	Yearly monitoring fee for GPS system (PTS-2000 only)		400.00	Included	$400.00

NOTES:

1. See Schedule C4 for Addco brochures.

Heil Construction Equipment

Item #	EQUIPMENT MAKE & MODEL:	EQUIPMENT CATEGORY	MSRP	% Discount Off MSRP	Discount	Set-Up Fees	Total Cost (With setup & delivery included)
72	Heil Half Pack Commercial Front Loader - 28CY		113,905.00	4%	$ 4,556.20	Included	$ 109,348.80
73	Heil Half Pack Commercial Front Loader - 32CY		117,310.00	4%	$ 4,692.40	Included	$ 112,617.60
74	Heil Half Pack Odyssey Residential FL - 20CY		129,815.00	4%	$ 5,192.60	Included	$ 124,622.40
75	Heil Half Pack Odyssey Residential FL - 23CY		129,290.00	4%	$ 5,171.60	Included	$ 124,118.40
76	Heil Half Pack Odyssey Residential FL - 28CY		129,920.00	4%	$ 5,196.80	Included	$ 124,723.20
77	Heil Half Pack Odyssey Commercial FL - 28CY		126,420.00	4%	$ 5,056.80	Included	$ 121,363.20
78	Heil Half Pack Odyssey Commercial FL - 32CY		129,860.00	4%	$ 5,194.40	Included	$ 124,665.60
79	Heil PT1000 Rear Loader - 13CY		52,340.00	4%	$ 2,093.60	Included	$ 50,246.40
80	Heil PT1000 Rear Loader - 16CY		54,070.00	4%	$ 2,162.80	Included	$ 51,907.20
81	Heil PT1000 Rear Loader - 18CY		55,520.00	4%	$ 2,220.80	Included	$ 53,299.20
82	Heil PT1000 Rear Loader - 20CY		57,230.00	4%	$ 2,289.20	Included	$ 54,940.80
83	Heil PT1000 Rear Loader - 25CY		60,450.00	4%	$ 2,418.00	Included	$ 58,032.00
86	Heil DP5000 Rear Loader - 25CY		68,310.00	4%	$ 2,732.40	Included	$ 65,577.60
87	Heil DP5000 Rear Loader - 27CY		69,890.00	4%	$ 2,795.60	Included	$ 67,094.40
88	Heil DP5000 Rear Loader - 32CY		72,860.00	4%	$ 2,914.40	Included	$ 69,945.60
89	Heil PT Commercial Rear Loader - 25CY		75,015.00	4%	$ 3,000.60	Included	$ 72,014.40
90	Heil PT Commercial Rear Loader - 27CY		76,575.00	4%	$ 3,063.00	Included	$ 73,512.00
91	Heil PT Commercial Rear Loader - 32CY		79,460.00	4%	$ 3,178.40	Included	$ 76,281.60
92	Heil PT Commercial Plus Rear Loader - 25CY		90,835.00	4%	$ 3,633.40	Included	$ 87,201.60
93	Heil PT Commercial Plus Rear Loader - 27CY		92,395.00	4%	$ 3,695.80	Included	$ 88,699.20
94	Heil PT Commercial Plus Rear Loader - 32CY		93,955.00	4%	$ 3,758.20	Included	$ 90,196.80
95	Heil Rapid Rail Automated Side Loader - 16CY		108,845.00	4%	$ 4,353.80	Included	$ 104,491.20
96	Heil Rapid Rail Automated Side Loader - 20CY		110,900.00	4%	$ 4,436.00	Included	$ 106,464.00
97	Heil Rapid Rail Automated Side Loader - 22CY		111,925.00	4%	$ 4,477.00	Included	$ 107,448.00
98	Heil Rapid Rail Automated Side Loader - 24CY		112,960.00	4%	$ 4,518.40	Included	$ 108,441.60
99	Heil Rapid Rail Automated Side Loader - 26CY		114,000.00	4%	$ 4,560.00	Included	$ 109,440.00
100	Heil Rapid Rail Automated Side Loader - 30CY		116,050.00	4%	$ 4,642.00	Included	$ 111,408.00
101	Heil Rapid Rail Automated Side Loader - 32CY		118,310.00	4%	$ 4,732.40	Included	$ 113,577.60
102	Heil DP Rapid Rail Automated Side Loader - 22CY		126,525.00	4%	$ 5,061.00	Included	$ 121,464.00
103	Heil DP Rapid Rail Automated Side Loader - 24CY		127,570.00	4%	$ 5,102.80	Included	$ 122,467.20
104	Heil DP Rapid Rail Automated Side Loader - 26CY		129,660.00	4%	$ 5,186.40	Included	$ 124,473.60
105	Heil DP Rapid Rail Automated Side Loader - 28CY		130,705.00	4%	$ 5,228.20	Included	$ 125,476.80
106	Heil DP Rapid Rail Automated Side Loader - 33CY		133,845.00	4%	$ 5,353.80	Included	$ 128,491.20
107	Heil DP Python Automated Side Loader - 22CY		118,880.00	4%	$ 4,755.20	Included	$ 114,124.80
108	Heil DP Python Automated Side Loader - 24CY		119,930.00	4%	$ 4,797.20	Included	$ 115,132.80
109	Heil DP Pyhton Automated Side Loader - 26CY		122,000.00	4%	$ 4,880.00	Included	$ 117,120.00
110	Heil DP Python Automated Side Loader - 28CY		123,045.00	4%	$ 4,921.80	Included	$ 118,123.20
111	Heil DP Python Automated Side Loader - 33CY		126,151.00	4%	$ 5,046.04	Included	$ 121,104.96

112	Heil Multi Pack Automated Side/Rear Loader - -24CY		160,215.00	4%	$ 6,408.60	Included	$ 153,806.40
113	Heil DP 4060 Split Rear Loader - 25CY		174,570.00	4%	$ 6,982.80	Included	$ 167,587.20

NOTES:

1. Prices do not include truck chassis.

2. Prices are for base body only and do not include any option content or mounting costs. See ***Schedule E5*** *for Heil option and mounting/installation costs. All options are subject to the 4% discount.*

3. See Schedule C5 for Heil brochures.

Envirosight Inspection Cameras

Item #	EQUIPMENT MAKE & MODEL:	EQUIPMENT CATEGORY	MSRP	% Discount Off MSRP	Discount	Set-Up Fees	Total Cost (With setup & delivery included)
123	Envirosight Rovver X Basic Truck Package		76,226.50	2%	$ 1,524.53	NA	$ 74,701.97
124	Envirosight Rovver X Pro Truck Package		83,230.00	2%	$ 1,664.60	NA	$ 81,565.40
126	Envirosight Rovver X Basic Truck Package with RX400 Crawler		101,500.00	2%	$ 2,030.00	NA	$ 99,470.00
127	Envirosight Stand Alone RXSAT System with RAX300 Cable Reel		118,247.50	2%	$ 2,364.95	NA	$ 115,882.55
128	Envirosight Verisight PRO Push Camera - 200		9,986.25	2%	$ 199.73	NA	$ 9,786.53
129	Envirosight Verisight PRO Push Camera - 330		10,911.25	2%	$ 218.23	NA	$ 10,693.03
130	Envirosight Quickview Air HD Camera		15,225.00	2%	$ 304.50	NA	$ 14,920.50
133	Envirosight JetScan HD Video Nozzle		12,941.25	2%	$ 258.83	NA	$ 12,682.43
133.1	Envirosight CleverScan Manhole Camera		71,050.00	2%	$ 1,421.00	NA	$ 69,629.00

NOTES:

1. Prices do not include any option content. See ***Schedule E6*** *for Envirosight option pricing. All option pricing is subject to the 2% discount.*

2. See Schedule C6 for Envirosight brochures.

Trackless Municipal Tractor

Item #	EQUIPMENT MAKE & MODEL:	EQUIPMENT CATEGORY	MSRP	% Discount Off MSRP	Discount	Set-Up Fees	Total Cost (With setup & delivery included)
134	Trackless Series MT7 Articulated Tractor		132,403.00	5%	$ 6,620.15	Included	$ 125,782.85

NOTES:

1. Price is for tractor only and does not include any option content. See ***Schedule E7*** *for Trackless option pricing. All options are subject to the 5% discount.*

2. See Schedule C7 for Trackless brochures.

ODB Xtreme Vac

Item #	EQUIPMENT MAKE & MODEL:	EQUIPMENT CATEGORY	MSRP	% Discount Off MSRP	Discount	Set-Up Fees	Total Cost (With setup & delivery included)
135	Xtreme Vac XV450 - John Deere 74HP Tier 4 Final		33,280.00	7.5%	$ 2,496.00	$0.00	$ 30,784.00
135.1	Xtreme Vac XV450 – Kubota 87 HP Gasoline Engine		28,600.00	7.5%	$ 2,145.00	$0.00	$ 26,455.00
142	Xtreme Vac XV550TM25 - 25 Cubic Yard, John Deere 74HP Tier 4 Final		59,644.00	7.5%	$ 4,473.30	$0.00	$ 55,170.70
142.1	Xtreme Vac XV550TM25 – Kubota 87 HP Gasoline Engine		54,964.00	7.5%	$ 4,122.30	$0.00	$ 50,841.70
143	Xtreme Vac XV550TM30 - 30 Cubic Yard, John Deere 74HP Tier 4 Final		60,840.00	7.5%	$ 4,563.00	$0.00	$ 56,277.00
143.1	Xtreme Vac XV550TM30 – Kubota 87 HP Gasoline Engine		56,160.00	7.5%	$ 4,212.00	$0.00	$ 51,948.00
147.1	Xtreme Vac XV700CB - Compaction Body, John Deere 74HP Tier 4 Final		174,090.00	7.5%	$ 13,056.75	$0.00	$ 161,033.25
147.2	Xtreme Vac XV700 Skid - Skid Mount, John Deere 74HP Tier 4 Final		34,912.00	7.5%	$ 2,618.40	$0.00	$ 32,293.60

NOTES:

1. Price is for debris collector only. Price does not include truck chassis, if applicable.

2. Prices do not include any option content. See ***Schedule E8*** *for ODB option pricing. All options are subject to the 7% discount.*

3. See Schedule C8 for ODB brochures.

Cargill Brine Making

Item #	EQUIPMENT MAKE & MODEL:	EQUIPMENT CATEGORY	Discount Pricing	Set-Up Fees	Total Cost (With setup & delivery included)
148	Accurbrine NXT	Brine Making	59,000.00	4,500.00	63,500.00
149	Accubrine NXT with Truck Fill	Brine Making	81,500.00	4,500.00	86,000.00
150	Accubrine NXT with Truck Fill & 1 Additive	Brine Making	94,000.00	4,500.00	98,500.00
151	Accubrine NXT with Truck Fill & 2 Additives	Brine Making	101,000.00	4,500.00	105,500.00
152	Accurbrine NXT with Truck Fill & 3 Additives	Brine Making	108,000.00	4,500.00	112,500.00
153	Stand Alone Truck Fill	Brine Making	46,000.00	4,500.00	50,500.00
154	Stand Alone Truck Fill & 1 Additive	Brine Making	53,000.00	4,500.00	57,500.00
155	Stand Alone Truck Fill & 2 Additives	Brine Making	60,000.00	4,500.00	64,500.00
156	Stand Alone Truck Fill & 3 Additives	Brine Making	67,500.00	4,500.00	72,000.00
157	Accubatch	Brine Making	29,000.00	4,500.00	33,500.00

NOTES:

1. All pricing is for base unit only and does not include any option content. See ***Schedule E9*** *for Cargill option pricing.*

2. See Schedule C9 for Cargill brochures.

3. Set-up fees are for brine maker installation and hook-up, if applicable. Customer reserves the right to provide their own installation and hook-up.

CONTRACT # 071B7700091 - AWARDED SPECIFICATIONS FOR RENTAL							DELIVERY - Lump sum cost per region (Per Schedule D, Prosperity Regional Map)												
Spec #	EQUIPMENT MAKE & MODEL:	EQUIPMENT CATEGORY	Quoted Daily Rental	Quoted Weekly Rental	Quoted Monthly Rental	Hourly rate for training (per Schedule A, Statement of Work, section A.,3.3)	1a. Western UP	1b. Central UP	1c. Eastern UP	2. Northwest	3. Northeast	4a. West Central	4b. West Michigan	5. East Central	6. East	7. South Central	8. Southwest	9. Southeast	10. Detroit Metro
21	C60-2001-16 Sand-Salt Spreader - Epoke 3800	SPREADER	NA	NA	$4,900.00	$100.00	$1,500	$1,250	$1,000	$750	$750	$500	$500	$500	$500	$500	$500	$300	$300
22	C62-0051-16 Street Sweeper - Elgin/Autocar	Sweeper	$1,300.00	$3,850.00	$10,780.00	$100.00	$1,500	$1,250	$1,000	$750	$750	$500	$500	$500	$500	$500	$500	$300	$300
NON-AWARDED SPECIFICATIONS FOR RENTAL																			
10	C36-0401-4T-16 Asphalt Heater-Hauler - Spaulding 4TLRMV	Asphalt Sealing	NA	$1,500.00	$5,800.00	$100.00	$500	$500	$500	$500	$500	$500	$500	$500	$500	$500	$500	$500	$500
21	C60-2001-16 Sand-Salt Spreader - Epoke 4900	SPREADER	NA	NA	$5,900.00	$100.00	$1,500	$1,250	$1,000	$750	$750	$500	$500	$500	$500	$500	$500	$300	$300

Catalog Pricing For RENTAL

Epoke Spreaders

							DELIVERY - Lump sum cost per region (Per Schedule D, Prosperity Regional Map)												
Item #	EQUIPMENT MAKE & MODEL:	EQUIPMENT CATEGORY	Hourly Rental	Daily Rental	Weekly Rental	Monthly Rental	1a. Western UP	1b. Central UP	1c. Eastern UP	2. Northwest	3. Northeast	4a. West Central	4b. West Michigan	5. East Central	6. East	7. South Central	8. Southwest	9. Southeast	10. Detroit Metro
1	Epoke 3800 Series	SPREADER	NA	NA	NA	$4,900	$1,500	$1,250	$1,000	$750	$750	$500	$500	$500	$500	$500	$500	$300	$300
2	Epoke 4900 Series	SPREADER	NA	NA	NA	$5,900	$1,500	$1,250	$1,000	$750	$750	$500	$500	$500	$500	$500	$500	$300	$300
							$0	$0	$0	$0	$0	$0	$0	$0	$0	$0	$0	$0	$0
NOTES:							$0	$0	$0	$0	$0	$0	$0	$0	$0	$0	$0	$0	$0
1. Minimum four (4) month rental commitment required.							$0	$0	$0	$0	$0	$0	$0	$0	$0	$0	$0	$0	$0
2. Prices do not include any mounting or installation costs.							$0	$0	$0	$0	$0	$0	$0	$0	$0	$0	$0	$0	$0

Elgin Sweepers

							DELIVERY - Lump sum cost per region (Per Schedule D, Prosperity Regional Map)												
Item #	EQUIPMENT MAKE & MODEL:	EQUIPMENT CATEGORY	Hourly Rental	Daily Rental	Weekly Rental	Monthly Rental	1a. Western UP	1b. Central UP	1c. Eastern UP	2. Northwest	3. Northeast	4a. West Central	4b. West Michigan	5. East Central	6. East	7. South Central	8. Southwest	9. Southeast	10. Detroit Metro
3	Elgin Pelican	SWEEPER	NA	$1,100	$3,300	$9,790	$1,500	$1,250	$1,000	$750	$750	$500	$500	$500	$500	$500	$500	$300	$300
4	Elgin Broom Bear	SWEEPER	NA	$1,200	$3,300	$9,790	$1,500	$1,250	$1,000	$750	$750	$500	$500	$500	$500	$500	$500	$300	$300
5	Elgin Broom Badger	SWEEPER	NA	$1,200	$3,300	$9,790	$1,500	$1,250	$1,000	$750	$750	$500	$500	$500	$500	$500	$500	$300	$300
6	Elgin Eagle	SWEEPER	NA	$1,200	$3,300	$9,790	$1,500	$1,250	$1,000	$750	$750	$500	$500	$500	$500	$500	$500	$300	$300
7	Elgin Whirlwind	SWEEPER	NA	$1,300	$3,850	$10,780	$1,500	$1,250	$1,000	$750	$750	$500	$500	$500	$500	$500	$500	$300	$300
8	Elgin Crosswind	SWEEPER	NA	$1,300	$3,850	$10,780	$1,500	$1,250	$1,000	$750	$750	$500	$500	$500	$500	$500	$500	$300	$300

Addco

							DELIVERY - Lump sum cost per region (Per Schedule D, Prosperity Regional Map)												
Item #	EQUIPMENT MAKE & MODEL:	EQUIPMENT CATEGORY	Hourly Rental	Daily Rental	Weekly Rental	Monthly Rental	1a. Western UP	1b. Central UP	1c. Eastern UP	2. Northwest	3. Northeast	4a. West Central	4b. West Michigan	5. East Central	6. East	7. South Central	8. Southwest	9. Southeast	10. Detroit Metro
9	Addco PTS-2000 Portable Traffic Signal System	Portable Sign	NA	NA	NA	$6,000	$375	$375	$375	$375	$375	$375	$375	$375	$375	$375	$375	$375	$375
							Delivery charges are one-way only and do not include pick-up.												

Heil Equipment

							DELIVERY - Lump sum cost per region (Per Schedule D, Prosperity Regional Map)												
Item #	EQUIPMENT MAKE & MODEL:	EQUIPMENT CATEGORY	Hourly Rental	Daily Rental	Weekly Rental	Monthly Rental	1a. Western UP	1b. Central UP	1c. Eastern UP	2. Northwest	3. Northeast	4a. West Central	4b. West Michigan	5. East Central	6. East	7. South Central	8. Southwest	9. Southeast	10. Detroit Metro
11	Heil Commercial Front Loader	Garbage Truck	NA	NA	$2,500	$7,000	$1,500	$1,250	$1,000	$750	$750	$500	$500	$500	$500	$500	$500	$300	$300
12	Heil DP5000 Rear Loader	Garbage Truck	NA	NA	$2,200	$6,500	$1,500	$1,250	$1,000	$750	$750	$500	$500	$500	$500	$500	$500	$300	$300
13	Heil Odyssey Residential Front Loader	Garbage Truck	NA	NA	$3,500	$8,700	$1,500	$1,250	$1,000	$750	$750	$500	$500	$500	$500	$500	$500	$300	$300
14	Heil DP Python Automated Side Loader	Garbage Truck	NA	NA	$3,000	$7,800	$1,500	$1,250	$1,000	$750	$750	$500	$500	$500	$500	$500	$500	$300	$300
15	Roll Off Hoist	Garbage Truck	NA	NA	$1,850	$6,200	$1,500	$1,250	$1,000	$750	$750	$500	$500	$500	$500	$500	$500	$300	$300

Jan-19	Spaulding Mfg., Inc. List Pricing	
2019	MI-DEAL	
125CST	**125 gallon oil jacketed crack sealer**	**$58,000.00**
	Diesel fired burner, automatic temperature control,	
	single axle trailer, 5200 LB torsion axles, electric brakes,	
	heated tower, heated cabinet, 110V heated hose, pumping system	
	Kubota, 3 cylinder, 24HP, diesel engine	
225CST	**225 Gallon Oil Jacketed Crack Sealer**	**$60,000.00**
	Diesel fired burner, automatic temperature control,	
	single axle trailer, 7000 LB torsion axles, electric brakes,	
	heated tower, heated cabinet, 110V heated hose, pumping system	
	Kubota, 3 cylinder, 24HP, diesel engine	
	Option for Cracksealers - 125CS and 225CS	
SPPATHLB	propane in lieu of diesel burner includes brackets fo r2 - 100 LB vapor propane tanks	**$880.00**
SP2100LBPT	2- 100 LP propane tanks (empty)	**$450.00**
SPV70CLE	70 cfm air compressor includes 44HP diesel engine	**$20,000.00**
SBBMB-34	retractable hose reel and 40 FT of 3/4 inch air hose and air blow 5 foot wand, ball valve on/off	**$1,850.00**
SPABW	air blow wand pistol grip with nozzle tip 36 inches	**$390.00**
SBCS0305	extra 110V heated hose	**$3,200.00**
SBCS0307	extra wand hose holder with pivot sealing cup for heated hose	**$1,450.00**
SBCS0306ST	3 inch sealing swivel disk	**$190.00**
SP6PCH	Cone holder (hold 6 cones not included)	**$160.00**
20FE	20 LB fire extinguisher in quick release holder and weatherproof inspection tag	**$450.00**
SP30HTT	30 gallon heated tack tank, insulated, auto temp, gravity spigot	**$2,950.00**
SPHESVP	spray system for tack, Honda gas engine with asphalt pump, dead man spray wand and 30 Ft of 1/2 inch hose	**$3,150.00**
SPTRHR	emulsion retractable hose reel for tack sprayer	**$850.00**
SPCWP	Cold weather package 12VDC fuel heater	**$550.00**

STATE OF MICHIGAN
CENTRAL PROCUREMENT SERVICES

Department of Technology, Management, and Budget
525 W. ALLEGAN ST., LANSING, MICHIGAN 48913
P.O. BOX 30026 LANSING, MICHIGAN 48909

CONTRACT CHANGE NOTICE

Change Notice Number **1**
to
Contract Number **071B7700091**

CONTRACTOR	
	BELL EQUIPMENT CO
	78 Northpointe Drive
	Lake Orion, MI 48359
	James Bell
	248-370-0000
	jbell@bellequip.com
	CV0022702

STATE			
	Program Manager	Scott Poyer	SW
		517-284-6448	
		poyers@Michigan.gov	
	Contract Administrator	Yvon Dufour	DTMB
		(517) 249-0455	
		dufoury@michigan.gov	

CONTRACT SUMMARY

CONSTRUCTION EQUIPMENT PURCHASE & RENTAL

INITIAL EFFECTIVE DATE	INITIAL EXPIRATION DATE	INITIAL AVAILABLE OPTIONS	EXPIRATION DATE BEFORE
January 13, 2017	January 12, 2021	2 - 1 Year	January 12, 2021

PAYMENT TERMS	DELIVERY TIMEFRAME

ALTERNATE PAYMENT OPTIONS			EXTENDED PURCHASING	
☐ P-Card	☐ PRC	☐ Other	☒ Yes	☐ No

MINIMUM DELIVERY REQUIREMENTS

DESCRIPTION OF CHANGE NOTICE

OPTION	LENGTH OF OPTION	EXTENSION	LENGTH OF EXTENSION	REVISED EXP. DATE
☐		☐		January 12, 2021

CURRENT VALUE	VALUE OF CHANGE NOTICE	ESTIMATED AGGREGATE CONTRACT VALUE
$2,500,000.00	$0.00	$2,500,000.00

DESCRIPTION

Effective 2/6/2019, pricing on this contract hereby updated, per revised Schedules E1, E2, E3, E4, E5, E6, E7, E8, and E9 (attached). All other terms, conditions, specifications and pricing remain the same. Per contractor request, and DTMB Procurement approval.

CONTRACT # 071B7700091 - AWARDED SPECIFICATIONS FOR PURCHASE				
Spec #	EQUIPMENT MAKE & MODEL:	EQUIPMENT CATEGORY	Quoted Price	Hourly rate for training (per Schedule A, Statement of Work, section A.,3.3)
22	C62-0051-16 Street Sweeper - Elgin/Autocar	Sweeper	$324,516.75	$100.00
NON-AWARDED SPECIFICATIONS FOR PURCHASE				
10	C36-0401-4T-16 Asphalt Heater-Hauler - Spaulding 4TRS	Asphalt Sealing	$22,605.00	$100.00
21	C60-2001-16 Sand-Salt Spreader - Epoke 4902	SPREADER	$109,784.00	$100.00

Catalog Pricing For PURCHASE

Epoke Spreaders

Item #	EQUIPMENT MAKE & MODEL:	EQUIPMENT CATEGORY	MSRP	% Discount Off MSRP	Discount	Set-Up Fees	Total Cost (With setup & delivery included)
	BULK SPREADERS						
1	Epoke 3800 SMALL	SPREADER	68,130.00	3%	$ 2,043.90	4,500.00	$ 70,586.10
2	Epoke 3800 MEDIUM	SPREADER	71,685.00	3%	$ 2,150.55	4,500.00	$ 74,034.45
3	Epoke 3800 LARGE	SPREADER	74,525.00	3%	$ 2,235.75	4,500.00	$ 76,789.25
4	Epoke 3800 2T SMALL	SPREADER	88,690.00	3%	$ 2,660.70	4,500.00	$ 90,529.30
5	Epoke 3800 2T MEDIUM	SPREADER	92,245.00	3%	$ 2,767.35	4,500.00	$ 93,977.65
6	Epoke 3800 2T LARGE	SPREADER	95,085.00	3%	$ 2,852.55	4,500.00	$ 96,732.45
7	Epoke 4900 SMALL	SPREADER	72,280.00	3%	$ 2,168.40	4,500.00	$ 74,611.60
8	Epoke 4900 MEDIUM	SPREADER	75,415.00	3%	$ 2,262.45	4,500.00	$ 77,652.55
9	Epoke 4900 LARGE	SPREADER	76,905.00	3%	$ 2,307.15	4,500.00	$ 79,097.85
10	Epoke 4902 SMALL	SPREADER	84,550.00	3%	$ 2,536.50	4,500.00	$ 86,513.50
11	Epoke 4902 MEDIUM	SPREADER	87,685.00	3%	$ 2,630.55	4,500.00	$ 89,554.45
12	Epoke 4902 LARGE	SPREADER	89,175.00	3%	$ 2,675.25	4,500.00	$ 90,999.75
13	Epoke Virtus 1,980 Gallon	SPREADER	97,710.00	3%	$ 2,931.30	6,500.00	$ 101,278.70
14	Epoke Virtus 2,640 Gallon	SPREADER	102,260.00	3%	$ 3,067.80	6,500.00	$ 105,692.20
15	Epoke Virtus 3,300 Gallon	SPREADER	106,810.00	3%	$ 3,204.30	6,500.00	$ 110,105.70
16	Epoke Virtus 4,000 Gallon	SPREADER	111,360.00	3%	$ 3,340.80	6,500.00	$ 114,519.20
17	Epoke Virtus 4,600 Gallon	SPREADER	117,555.00	3%	$ 3,526.65	6,500.00	$ 120,528.35
18	Epoke Virtus AST Kit	SPREADER	49,625.00	3%	$ 1,488.75	6,500.00	$ 54,636.25
19	Epoke Virtus City AST Kit	SPREADER	60,180.00	3%	$ 1,805.40	6,500.00	$ 64,874.60
20	Epoke Igloo 2300 - 1.0 Yard	SPREADER	20,845.00	3%	$ 625.35	6,500.00	$ 26,719.65
21	Epoke Igloo 2300 - 1.4 Yard	SPREADER	22,180.00	3%	$ 665.40	4,500.00	$ 26,014.60
22	Epoke Igloo 2300 - 1.8 Yard	SPREADER	23,520.00	3%	$ 705.60	4,500.00	$ 27,314.40
23	Epoke Igloo 2400 - .8 Yard	SPREADER	27,785.00	3%	$ 833.55	4,500.00	$ 31,451.45
24	Epoke Igloo 2400 - 1.0 Yard	SPREADER	29,140.00	3%	$ 874.20	4,500.00	$ 32,765.80
25	Epoke Igloo 2400 - 1.4 Yard	SPREADER	30,475.00	3%	$ 914.25	4,500.00	$ 34,060.75
26	Epoke Igloo 2400 - 1.8 Yard	SPREADER	31,825.00	3%	$ 954.75	4,500.00	$ 35,370.25
	TOWED SPREADERS						
27	Epoke Mini 5	SPREADER	1,360.00	5%	$ 68.00	$0.00	$ 1,292.00
28	Epoke Mini 20	SPREADER	3,170.00	5%	$ 158.50	$0.00	$ 3,011.50
29	Epoke ITM35	SPREADER	5,575.00	5%	$ 278.75	$0.00	$ 5,296.25
30	Epoke ITM45	SPREADER	8,020.00	5%	$ 401.00	$0.00	$ 7,619.00
31	Epoke ITM60	SPREADER	8,370.00	5%	$ 418.50	$0.00	$ 7,951.50
32	Epoke PM1.4	SPREADER	5,940.00	5%	$ 297.00	$0.00	$ 5,643.00
33	Epoke PMH1.4	SPREADER	5,185.00	5%	$ 259.25	$0.00	$ 4,925.75
34	Epoke SKE8	SPREADER	17,135.00	5%	$ 856.75	$0.00	$ 16,278.25
35	Epoke SKE15	SPREADER	22,810.00	5%	$ 1,140.50	$0.00	$ 21,669.50
36	Epoke SKE20	SPREADER	24,670.00	5%	$ 1,233.50	$0.00	$ 23,436.50
37	Epoke TKB12-280	SPREADER	22,375.00	5%	$ 1,118.75	$0.00	$ 21,256.25
38	Epoke TMK10-275	SPREADER	19,175.00	5%	$ 958.75	$0.00	$ 18,216.25
39	Epoke PSL 6.5	SPREADER	11,590.00	5%	$ 579.50	$0.00	$ 11,010.50

40	Epoke TP3	SPREADER	29,275.00	5%	$ 1,463.75	$0.00	$ 27,811.25
41	Epoke TP9	SPREADER	33,895.00	5%	$ 1,694.75	$0.00	$ 32,200.25

NOTES:

1. Price is for base unit only. See Schedule C1 for Epoke brochures.

*2. Prices do not include any option content. See **Schedule E2** for Epoke option pricing. All option pricing is subject to the 3% and 5% discount.*

3. Set-Up Fees are for mounting and installation on customer supplied chassis, where applicable.

Elgin Sweepers

Item #	EQUIPMENT MAKE & MODEL:	EQUIPMENT CATEGORY	MSRP	% Discount Off MSRP	Discount	Set-Up Fees & Delivery	Total Cost (With setup & delivery included)
42	Elgin Pelican - Single	SWEEPER	193,125.00	3.0%	$ 5,793.75	$1,270.70	$ 188,601.95
43	Elgin Pelican - Dual	SWEEPER	204,250.00	3.0%	$ 6,127.50	$1,270.70	$ 199,393.20
44	Elgin Waterless Pelican	SWEEPER	248,750.00	3.0%	$ 7,462.50	$1,270.70	$ 242,558.20
45	Elgin Broom Bear (Purchase of this item is for MDOT Only)	SWEEPER	155,625.00	8.0%	$ 12,450.00	$1,270.70	$ 144,445.70
46	Elgin Road Wizard	SWEEPER	183,875.00	3.0%	$ 5,516.25	$1,270.70	$ 179,629.45
47	Elgin Broom Badger	SWEEPER	133,815.00	3.0%	$ 4,014.45	$1,270.70	$ 131,071.25
48	Elgin Eagle	SWEEPER	177,500.00	3.0%	$ 5,325.00	$1,270.70	$ 173,445.70
49	Elgin Waterless Eagle (Purchase of this item is for MDOT Only)	SWEEPER	222,250.00	12.0%	$ 26,670.00	$1,270.70	$ 196,850.70
50	Elgin Whirlwind - Single	SWEEPER	159,250.00	3.0%	$ 4,777.50	$1,270.70	$ 155,743.20
51	Elgin Whirlwind - Dual	SWEEPER	173,375.00	3.0%	$ 5,201.25	$1,270.70	$ 169,444.45
52	Elgin Crosswind (Purchase of this item is for MDOT Only)	SWEEPER	131,910.00	10.5%	$ 13,850.55	$1,270.70	$ 119,330.15
53	Elgin Megawind, 10CY, CB Cleaner Only* (Purchase of this item is for MDOT Only)	SWEEPER	162,250.00	11.5%	$ 18,658.75	$1,270.70	$ 144,861.95
54	Elgin Megawind, 10CY - Single* (Purchase of this item is for MDOT Only)	SWEEPER	187,375.00	10.5%	$ 19,674.38	$1,270.70	$ 168,971.33
55	Elgin Megawind, 10CY - Dual* (Purchase of this item is for MDOT Only)	SWEEPER	203,500.00	10.0%	$ 20,350.00	$1,270.70	$ 184,420.70
56	Elgin Megawind, 13CY, CB Cleaner Only* (Purchase of this item is for MDOT Only)	SWEEPER	168,625.00	11.3%	$ 19,054.63	$1,270.70	$ 150,841.08
57	Elgin Megawind, 13CY - Single* (Purchase of this item is for MDOT Only)	SWEEPER	193,750.00	10.3%	$ 19,956.25	$1,270.70	$ 175,064.45
58	Elgin Megawind, 13CY - Dual* (Purchase of this item is for MDOT Only)	SWEEPER	211,125.00	9.8%	$ 20,690.25	$1,270.70	$ 191,705.45

NOTES:

1. Price is for sweeper module only. Does not include truck chassis, if applicable. See Schedule C2 for Elgin brochures.

*2. Prices do not include any option content. See **Schedule E3** for Elgin option pricing. All option pricing is subject to the 3% discount.*

Spaulding Asphalt Equipment

Item #	EQUIPMENT MAKE & MODEL:	EQUIPMENT CATEGORY	Discount Pricing	Set-Up Fees	Total Cost (With setup & delivery included)
59	Spaulding Model 1TRS-LRMV-1 1 Ton Trailer	Asphalt Sealing	17,050.00	NA	$ 17,050.00
60	Spaulding Model 2TRS-LRMV-2 2 Ton Trailer	Asphalt Sealing	17,908.00	NA	$ 17,908.00
61	Spaulding Model 3TRS-LRMV-3 3 Ton Trailer	Asphalt Sealing	21,835.00	NA	$ 21,835.00
62	Spaulding Model 4TRS-LRMV-4 4 Ton Trailer	Asphalt Sealing	22,605.00	NA	$ 22,605.00
63	Spaudling Model 6TRS-LRMV-6 6 Ton Trailer	Asphalt Sealing	50,875.00	NA	$ 50,875.00
65	Spaulding Oil Jacketed 125 Gallon Crack Sealer	Asphalt Sealing	58,000.00	NA	$ 58,000.00
66	Spaulding Oil Jacketed 225 Gallon Crack Sealer	Asphalt Sealing	60,000.00	NA	$ 60,000.00

NOTES:

*1. Pricing is for base unit only and does not include any option content. See **Schedule E4** for Spaulding option pricing. See Schedule C3 for Spaulding brochures.*

Addco Equipment

Item #	EQUIPMENT MAKE & MODEL:	EQUIPMENT CATEGORY	Discount Pricing	Set-Up Fees	Total Cost (With setup & delivery included)
67	Addco PTS-2000 Portable Traffic Signal System	Portable Traffic Signal	74,100.00	NA	$74,100.00
	OPTIONS				
69	Doppler radar motion sensors (TC26B) (PTS-2000 only)		2,400.00	Included	$2,400.00
70	GPS monitoring system (PTS-2000 only)		1,400.00	Included	$1,400.00
71	Yearly monitoring fee for GPS system (PTS-2000 only)		400.00	Included	$400.00

NOTES:

1. See Schedule C4 for Addco brochures.

Heil Construction Equipment

Item #	EQUIPMENT MAKE & MODEL:	EQUIPMENT CATEGORY	MSRP	% Discount Off MSRP	Discount	Set-Up Fees	Total Cost (With setup & delivery included)
72	Heil Half Pack Commercial Front Loader - 28CY		113,905.00	4%	$ 4,556.20	Included	$ 109,348.80
73	Heil Half Pack Commercial Front Loader - 32CY		117,310.00	4%	$ 4,692.40	Included	$ 112,617.60
74	Heil Half Pack Odyssey Residential FL - 20CY		129,815.00	4%	$ 5,192.60	Included	$ 124,622.40
75	Heil Half Pack Odyssey Residential FL - 23CY		129,290.00	4%	$ 5,171.60	Included	$ 124,118.40
76	Heil Half Pack Odyssey Residential FL - 28CY		129,920.00	4%	$ 5,196.80	Included	$ 124,723.20
77	Heil Half Pack Odyssey Commercial FL - 28CY		126,420.00	4%	$ 5,056.80	Included	$ 121,363.20
78	Heil Half Pack Odyssey Commercial FL - 32CY		129,860.00	4%	$ 5,194.40	Included	$ 124,665.60
79	Heil PT1000 Rear Loader - 13CY		52,340.00	4%	$ 2,093.60	Included	$ 50,246.40
80	Heil PT1000 Rear Loader - 16CY		54,070.00	4%	$ 2,162.80	Included	$ 51,907.20
81	Heil PT1000 Rear Loader - 18CY		55,520.00	4%	$ 2,220.80	Included	$ 53,299.20
82	Heil PT1000 Rear Loader - 20CY		57,230.00	4%	$ 2,289.20	Included	$ 54,940.80
83	Heil PT1000 Rear Loader - 25CY		60,450.00	4%	$ 2,418.00	Included	$ 58,032.00
86	Heil DP5000 Rear Loader - 25CY		68,310.00	4%	$ 2,732.40	Included	$ 65,577.60
87	Heil DP5000 Rear Loader - 27CY		69,890.00	4%	$ 2,795.60	Included	$ 67,094.40
88	Heil DP5000 Rear Loader - 32CY		72,860.00	4%	$ 2,914.40	Included	$ 69,945.60
89	Heil PT Commercial Rear Loader - 25CY		75,015.00	4%	$ 3,000.60	Included	$ 72,014.40
90	Heil PT Commercial Rear Loader - 27CY		76,575.00	4%	$ 3,063.00	Included	$ 73,512.00
91	Heil PT Commercial Rear Loader - 32CY		79,460.00	4%	$ 3,178.40	Included	$ 76,281.60
92	Heil PT Commercial Plus Rear Loader - 25CY		90,835.00	4%	$ 3,633.40	Included	$ 87,201.60
93	Heil PT Commercial Plus Rear Loader - 27CY		92,395.00	4%	$ 3,695.80	Included	$ 88,699.20
94	Heil PT Commercial Plus Rear Loader - 32CY		93,955.00	4%	$ 3,758.20	Included	$ 90,196.80
95	Heil Rapid Rail Automated Side Loader - 16CY		108,845.00	4%	$ 4,353.80	Included	$ 104,491.20
96	Heil Rapid Rail Automated Side Loader - 20CY		110,900.00	4%	$ 4,436.00	Included	$ 106,464.00
97	Heil Rapid Rail Automated Side Loader - 22CY		111,925.00	4%	$ 4,477.00	Included	$ 107,448.00
98	Heil Rapid Rail Automated Side Loader - 24CY		112,960.00	4%	$ 4,518.40	Included	$ 108,441.60
99	Heil Rapid Rail Automated Side Loader - 26CY		114,000.00	4%	$ 4,560.00	Included	$ 109,440.00
100	Heil Rapid Rail Automated Side Loader - 30CY		116,050.00	4%	$ 4,642.00	Included	$ 111,408.00
101	Heil Rapid Rail Automated Side Loader - 32CY		118,310.00	4%	$ 4,732.40	Included	$ 113,577.60
102	Heil DP Rapid Rail Automated Side Loader - 22CY		126,525.00	4%	$ 5,061.00	Included	$ 121,464.00
103	Heil DP Rapid Rail Automated Side Loader - 24CY		127,570.00	4%	$ 5,102.80	Included	$ 122,467.20
104	Heil DP Rapid Rail Automated Side Loader - 26CY		129,660.00	4%	$ 5,186.40	Included	$ 124,473.60
105	Heil DP Rapid Rail Automated Side Loader - 28CY		130,705.00	4%	$ 5,228.20	Included	$ 125,476.80
106	Heil DP Rapid Rail Automated Side Loader - 33CY		133,845.00	4%	$ 5,353.80	Included	$ 128,491.20
107	Heil DP Python Automated Side Loader - 22CY		118,880.00	4%	$ 4,755.20	Included	$ 114,124.80
108	Heil DP Python Automated Side Loader - 24CY		119,930.00	4%	$ 4,797.20	Included	$ 115,132.80
109	Heil DP Pyhton Automated Side Loader - 26CY		122,000.00	4%	$ 4,880.00	Included	$ 117,120.00
110	Heil DP Python Automated Side Loader - 28CY		123,045.00	4%	$ 4,921.80	Included	$ 118,123.20
111	Heil DP Python Automated Side Loader - 33CY		126,151.00	4%	$ 5,046.04	Included	$ 121,104.96

112	Heil Multi Pack Automated Side/Rear Loader - -24CY		160,215.00	4%	$ 6,408.60	Included	$ 153,806.40
113	Heil DP 4060 Split Rear Loader - 25CY		174,570.00	4%	$ 6,982.80	Included	$ 167,587.20

NOTES:

1. Prices do not include truck chassis.

2. Prices are for base body only and do not include any option content or mounting costs. See ***Schedule E5*** *for Heil option and mounting/installation costs. All options are subject to the 4% discount.*

3. See Schedule C5 for Heil brochures.

Envirosight Inspection Cameras

Item #	EQUIPMENT MAKE & MODEL:	EQUIPMENT CATEGORY	MSRP	% Discount Off MSRP	Discount	Set-Up Fees	Total Cost (With setup & delivery included)
123	Envirosight Rovver X Basic Truck Package		76,226.50	2%	$ 1,524.53	NA	$ 74,701.97
124	Envirosight Rovver X Pro Truck Package		83,230.00	2%	$ 1,664.60	NA	$ 81,565.40
126	Envirosight Rovver X Basic Truck Package with RX400 Crawler		101,500.00	2%	$ 2,030.00	NA	$ 99,470.00
127	Envirosight Stand Alone RXSAT System with RAX300 Cable Reel		118,247.50	2%	$ 2,364.95	NA	$ 115,882.55
128	Envirosight Verisight PRO Push Camera - 200		9,986.25	2%	$ 199.73	NA	$ 9,786.53
129	Envirosight Verisight PRO Push Camera - 330		10,911.25	2%	$ 218.23	NA	$ 10,693.03
130	Envirosight Quickview Air HD Camera		15,225.00	2%	$ 304.50	NA	$ 14,920.50
133	Envirosight JetScan HD Video Nozzle		12,941.25	2%	$ 258.83	NA	$ 12,682.43
133.1	Envirosight CleverScan Manhole Camera		71,050.00	2%	$ 1,421.00	NA	$ 69,629.00

NOTES:

1. Prices do not include any option content. See ***Schedule E6*** *for Envirosight option pricing. All option pricing is subject to the 2% discount.*

2. See Schedule C6 for Envirosight brochures.

Trackless Municipal Tractor

Item #	EQUIPMENT MAKE & MODEL:	EQUIPMENT CATEGORY	MSRP	% Discount Off MSRP	Discount	Set-Up Fees	Total Cost (With setup & delivery included)
134	Trackless Series MT7 Articulated Tractor		132,403.00	5%	$ 6,620.15	Included	$ 125,782.85

NOTES:

1. Price is for tractor only and does not include any option content. See ***Schedule E7*** *for Trackless option pricing. All options are subject to the 5% discount.*

2. See Schedule C7 for Trackless brochures.

ODB Xtreme Vac

Item #	EQUIPMENT MAKE & MODEL:	EQUIPMENT CATEGORY	MSRP	% Discount Off MSRP	Discount	Set-Up Fees	Total Cost (With setup & delivery included)
135	Xtreme Vac XV450 - John Deere 74HP Tier 4 Final		33,280.00	7.5%	$ 2,496.00	$0.00	$ 30,784.00
135.1	Xtreme Vac XV450 – Kubota 87 HP Gasoline Engine		28,600.00	7.5%	$ 2,145.00	$0.00	$ 26,455.00
142	Xtreme Vac XV550TM25 - 25 Cubic Yard, John Deere 74HP Tier 4 Final		59,644.00	7.5%	$ 4,473.30	$0.00	$ 55,170.70
142.1	Xtreme Vac XV550TM25 – Kubota 87 HP Gasoline Engine		54,964.00	7.5%	$ 4,122.30	$0.00	$ 50,841.70
143	Xtreme Vac XV550TM30 - 30 Cubic Yard, John Deere 74HP Tier 4 Final		60,840.00	7.5%	$ 4,563.00	$0.00	$ 56,277.00
143.1	Xtreme Vac XV550TM30 – Kubota 87 HP Gasoline Engine		56,160.00	7.5%	$ 4,212.00	$0.00	$ 51,948.00
147.1	Xtreme Vac XV700CB - Compaction Body, John Deere 74HP Tier 4 Final		174,090.00	7.5%	$ 13,056.75	$0.00	$ 161,033.25
147.2	Xtreme Vac XV700 Skid - Skid Mount, John Deere 74HP Tier 4 Final		34,912.00	7.5%	$ 2,618.40	$0.00	$ 32,293.60

NOTES:

1. *Price is for debris collector only. Price does not include truck chassis, if applicable.*
2. *Prices do not include any option content. See* ***Schedule E8*** *for ODB option pricing. All options are subject to the 7% discount.*
3. *See Schedule C8 for ODB brochures.*

Cargill Brine Making

Item #	EQUIPMENT MAKE & MODEL:	EQUIPMENT CATEGORY	Discount Pricing	Set-Up Fees	Total Cost (With setup & delivery included)
148	Accurbrine NXT	Brine Making	59,000.00	4,500.00	63,500.00
149	Accubrine NXT with Truck Fill	Brine Making	81,500.00	4,500.00	86,000.00
150	Accubrine NXT with Truck Fill & 1 Additive	Brine Making	94,000.00	4,500.00	98,500.00
151	Accubrine NXT with Truck Fill & 2 Additives	Brine Making	101,000.00	4,500.00	105,500.00
152	Accurbrine NXT with Truck Fill & 3 Additives	Brine Making	108,000.00	4,500.00	112,500.00
153	Stand Alone Truck Fill	Brine Making	46,000.00	4,500.00	50,500.00
154	Stand Alone Truck Fill & 1 Additive	Brine Making	53,000.00	4,500.00	57,500.00
155	Stand Alone Truck Fill & 2 Additives	Brine Making	60,000.00	4,500.00	64,500.00
156	Stand Alone Truck Fill & 3 Additives	Brine Making	67,500.00	4,500.00	72,000.00
157	Accubatch	Brine Making	29,000.00	4,500.00	33,500.00

NOTES:

1. *All pricing is for base unit only and does not include any option content. See* ***Schedule E9*** *for Cargill option pricing.*
2. *See Schedule C9 for Cargill brochures.*
3. *Set-up fees are for brine maker installation and hook-up, if applicable. Customer reserves the right to provide their own installation and hook-up.*

CONTRACT # 071B7700091 - AWARDED SPECIFICATIONS FOR RENTAL							DELIVERY - Lump sum cost per region (Per Schedule D, Prosperity Regional Map)												
Spec #	EQUIPMENT MAKE & MODEL:	EQUIPMENT CATEGORY	Quoted Daily Rental	Quoted Weekly Rental	Quoted Monthly Rental	Hourly rate for training (per Schedule A, Statement of Work, section A.,3.3)	1a. Western UP	1b. Central UP	1c. Eastern UP	2. Northwest	3. Northeast	4a. West Central	4b. West Michigan	5. East Central	6. East	7. South Central	8. Southwest	9. Southeast	10. Detroit Metro
21	C60-2001-16 Sand-Salt Spreader - Epoke 3800	SPREADER	NA	NA	$4,900.00	$100.00	$1,500	$1,250	$1,000	$750	$750	$500	$500	$500	$500	$500	$500	$300	$300
22	C62-0051-16 Street Sweeper - Elgin/Autocar	Sweeper	$1,300.00	$3,850.00	$10,780.00	$100.00	$1,500	$1,250	$1,000	$750	$750	$500	$500	$500	$500	$500	$500	$300	$300
NON-AWARDED SPECIFICATIONS FOR RENTAL																			
10	C36-0401-4T-16 Asphalt Heater-Hauler - Spaulding 4TLRMV	Asphalt Sealing	NA	$1,500.00	$5,800.00	$100.00	$500	$500	$500	$500	$500	$500	$500	$500	$500	$500	$500	$500	$500
21	C60-2001-16 Sand-Salt Spreader - Epoke 4900	SPREADER	NA	NA	$5,900.00	$100.00	$1,500	$1,250	$1,000	$750	$750	$500	$500	$500	$500	$500	$500	$300	$300

Catalog Pricing For RENTAL

Epoke Spreaders

							DELIVERY - Lump sum cost per region (Per Schedule D, Prosperity Regional Map)												
Item #	EQUIPMENT MAKE & MODEL:	EQUIPMENT CATEGORY	Hourly Rental	Daily Rental	Weekly Rental	Monthly Rental	1a. Western UP	1b. Central UP	1c. Eastern UP	2. Northwest	3. Northeast	4a. West Central	4b. West Michigan	5. East Central	6. East	7. South Central	8. Southwest	9. Southeast	10. Detroit Metro
1	Epoke 3800 Series	SPREADER	NA	NA	NA	$4,900	$1,500	$1,250	$1,000	$750	$750	$500	$500	$500	$500	$500	$500	$300	$300
2	Epoke 4900 Series	SPREADER	NA	NA	NA	$5,900	$1,500	$1,250	$1,000	$750	$750	$500	$500	$500	$500	$500	$500	$300	$300
							$0	$0	$0	$0	$0	$0	$0	$0	$0	$0	$0	$0	$0
NOTES:							$0	$0	$0	$0	$0	$0	$0	$0	$0	$0	$0	$0	$0
1. Minimum four (4) month rental commitment required.							$0	$0	$0	$0	$0	$0	$0	$0	$0	$0	$0	$0	$0
2. Prices do not include any mounting or installation costs.							$0	$0	$0	$0	$0	$0	$0	$0	$0	$0	$0	$0	$0

Elgin Sweepers

							DELIVERY - Lump sum cost per region (Per Schedule D, Prosperity Regional Map)												
Item #	EQUIPMENT MAKE & MODEL:	EQUIPMENT CATEGORY	Hourly Rental	Daily Rental	Weekly Rental	Monthly Rental	1a. Western UP	1b. Central UP	1c. Eastern UP	2. Northwest	3. Northeast	4a. West Central	4b. West Michigan	5. East Central	6. East	7. South Central	8. Southwest	9. Southeast	10. Detroit Metro
3	Elgin Pelican	SWEEPER	NA	$1,100	$3,300	$9,790	$1,500	$1,250	$1,000	$750	$750	$500	$500	$500	$500	$500	$500	$300	$300
4	Elgin Broom Bear	SWEEPER	NA	$1,200	$3,300	$9,790	$1,500	$1,250	$1,000	$750	$750	$500	$500	$500	$500	$500	$500	$300	$300
5	Elgin Broom Badger	SWEEPER	NA	$1,200	$3,300	$9,790	$1,500	$1,250	$1,000	$750	$750	$500	$500	$500	$500	$500	$500	$300	$300
6	Elgin Eagle	SWEEPER	NA	$1,200	$3,300	$9,790	$1,500	$1,250	$1,000	$750	$750	$500	$500	$500	$500	$500	$500	$300	$300
7	Elgin Whirlwind	SWEEPER	NA	$1,300	$3,850	$10,780	$1,500	$1,250	$1,000	$750	$750	$500	$500	$500	$500	$500	$500	$300	$300
8	Elgin Crosswind	SWEEPER	NA	$1,300	$3,850	$10,780	$1,500	$1,250	$1,000	$750	$750	$500	$500	$500	$500	$500	$500	$300	$300

Addco

							DELIVERY - Lump sum cost per region (Per Schedule D, Prosperity Regional Map)												
Item #	EQUIPMENT MAKE & MODEL:	EQUIPMENT CATEGORY	Hourly Rental	Daily Rental	Weekly Rental	Monthly Rental	1a. Western UP	1b. Central UP	1c. Eastern UP	2. Northwest	3. Northeast	4a. West Central	4b. West Michigan	5. East Central	6. East	7. South Central	8. Southwest	9. Southeast	10. Detroit Metro
9	Addco PTS-2000 Portable Traffic Signal System	Portable Sign	NA	NA	NA	$6,000	$375	$375	$375	$375	$375	$375	$375	$375	$375	$375	$375	$375	$375
							Delivery charges are one-way only and do not include pick-up.												

Spaulding Asphalt Equipment

							DELIVERY - Lump sum cost per region (Per Schedule D, Prosperity Regional Map)												
Item #	EQUIPMENT MAKE & MODEL:	EQUIPMENT CATEGORY	Hourly Rental	Daily Rental	Weekly Rental	Monthly Rental	1a. Western UP	1b. Central UP	1c. Eastern UP	2. Northwest	3. Northeast	4a. West Central	4b. West Michigan	5. East Central	6. East	7. South Central	8. Southwest	9. Southeast	10. Detroit Metro
10	Spaulding 4 Ton Asphalt Patcher	Asphalt Patcher	NA	NA	$1,500	$5,800	$500	$500	$500	$500	$500	$500	$500	$500	$500	$500	$500	$500	$500

Heil Equipment

							DELIVERY - Lump sum cost per region (Per Schedule D, Prosperity Regional Map)												
Item #	EQUIPMENT MAKE & MODEL:	EQUIPMENT CATEGORY	Hourly Rental	Daily Rental	Weekly Rental	Monthly Rental	1a. Western UP	1b. Central UP	1c. Eastern UP	2. Northwest	3. Northeast	4a. West Central	4b. West Michigan	5. East Central	6. East	7. South Central	8. Southwest	9. Southeast	10. Detroit Metro
11	Heil Commercial Front Loader	Garbage Truck	NA	NA	$2,500	$7,000	$1,500	$1,250	$1,000	$750	$750	$500	$500	$500	$500	$500	$500	$300	$300
12	Heil DP5000 Rear Loader	Garbage Truck	NA	NA	$2,200	$6,500	$1,500	$1,250	$1,000	$750	$750	$500	$500	$500	$500	$500	$500	$300	$300
13	Heil Odyssey Residential Front Loader	Garbage Truck	NA	NA	$3,500	$8,700	$1,500	$1,250	$1,000	$750	$750	$500	$500	$500	$500	$500	$500	$300	$300
14	Heil DP Python Automated Side Loader	Garbage Truck	NA	NA	$3,000	$7,800	$1,500	$1,250	$1,000	$750	$750	$500	$500	$500	$500	$500	$500	$300	$300
15	Roll Off Hoist	Garbage Truck	NA	NA	$1,850	$6,200	$1,500	$1,250	$1,000	$750	$750	$500	$500	$500	$500	$500	$500	$300	$300

Epoke Price List: Sourcewell Contract

Epoke Bulk Spreaders

Sourcewell members are subject to a 3% discount on Epoke Bulk Spreaders.

Bulk Spreader models and technology included are: Igloo, S3800 AST, S4900/4902 Sirius Combi AST, Virtus and EpoSat

Model pricing sheets follow this page.

Pricing is effective 6-1-2018

All pricing is USD

FOB Destination. United States

EPOKE S3800/ 3800-2T SIRIUS AST

MSRP USD
FOB DESTINATION, NORTH AMERICA

Epoke S3800 Sirius AST road speed related truck mounted spreader (driven by truck mounted hydraulic system) with the following standard features and included options:

38XX	stainless steel agitator with replaceable steel spring fingers
38XX	stainless steel delivery roller with 8mm steel cams
38XX	soft rubber base & standard spring base and spring base adjustment
38XX	conveyor belt
38XX	galvanized feed funnel and inspection ladder
38XX	central placed grease points
608286	hydraulic fittings JIC – 12 pressure & return- Dealer to supply hydraulic hoses
606162	large distribution box with RS232
608362	EpoMaster III controller with RS232 & card reader
609609	ground speed adapter
425400	spout, stainless steel
38XX	wiring only for work light and wiring and beacon stems for two beacons
608569	hydraulic pressure gauge in machine house
608083	neutral gear
608XXX	liquid system including side tanks, liquid level indicator and autostop of liquid fill
608069	5 – 30% variable prewetting system
605605	shut off valve
608740	stainless steel liquid spout
38XX	safety grate 4" X 4" with 8 degree slope
608134	level indicator for dry material

Epoke S3800 Sirius AST **SMALL** hopper equipped as above with 2 X 245 gallon side tanks- select one of the following hopper options:

3830 SMALL 3m3 (4.0 cubic yard) ..... $ 68,130.00

3831 SMALL 3m3 + 1m3 (5.2 cubic yard) add ..... $ 1,705.00
3832 SMALL 3m3 + 2m3 (6.5 cubic yard) add ..... $ 2,060.00

Epoke S3800 Sirius AST **MEDIUM** hopper equipped as above with 2 X 310 gallon side tanks- select one of the following hopper options:

3840 MEDIUM 4m3 (5.2 cubic yard) ..... $ 71,685.00

3850 MEDIUM 4m3 + 1m3 (6.5 cubic yard) add ..... $ 1,705.00
3851 MEDIUM 4m3 + 2m3 (7.8 cubic yard) add ..... $ 2,060.00
3852 MEDIUM 4m3 + 3m3 (9.1 cubic yard) add ..... $ 2,415.00

Epoke S3800 Sirius AST **LARGE** hopper equipped as above with 2 X 405 gallon side tank- select one of the following hopper options:

3860 LARGE 6m3 (7.8 cubic yard) ..... $ 74,525.00

3870 LARGE 6m3 + 1m3 (9.1 cubic yard) add ..... $ 1,705.00
3871 LARGE 6m3 + 2m3 (10.4 cubic yard) add ..... $ 2,060.00
3872 LARGE 6m3 + 3m3 (11.7 cubic yard) add ..... $ 2,415.00

EPOKE S3800/ 3800-2T SIRIUS AST

MSRP USD
FOB DESTINATION, NORTH AMERICA

Select one of the following chute arrangements:

608272	Short chute arrangement for truck bed height 1072 - 1377 mm (42" to 54")
608271	Long chute arrangement for truck bed height 1415 – 1770 mm (55" to 70")

Paint: Spreaders are painted standard Epoke RAL 2011 orange. Other RAL colors are available at a Dealer net cost of $ 1,365.00 per order. This cost is for cleaning and changeover and is a total net *per order*- for one or multiple spreaders that are ordered at the same time.

Options:

608193 Front tank 265 gallon ..... $ 4,565.00

38XX Leg system (includes the following): ..... $ 7,940.00
608062 17 ton brackets; 608243 rubber protection bars on subframe; 608648 side marker/ flag; 608664 spring assist for rear legs; 608682 short console frame for front roller; 603992 multiplug kit; 38XX lateral guides

38XX Folding cover ..... $ 3,085.00

608748 'D' ring tie down kit- Dealer installed for 4 points at top corner of hopper/extension ..... $ 290.00

605423 Electric symmetry ..... $ 1,100.00

38XX Lighting includes LED Megabeam work light and two LED rotating orange beacons ..... $ 1,195.00

608665/ 609895 Frame mount kit includes 1 front pivot and 1 or 2 rear supports as required ..... $ 2,900.00

604577 Air temperature sensor ..... $ 405.00

603320 Proximity sensor for two plows ..... $ 810.00

609154 Extreme duty spinner disc and wings for sand use ..... $ 580.00

3800AST-2T Twin Spinner option (up to 80' spread width) add ..... $ 20,560.00

EPOKE S4900/ 4902 SIRIUS COMBI AST

MSRP USD
FOB DESTINATION, NORTH AMERICA

Epoke S4900 Sirius Combi AST road speed related truck mounted spreader (driven by truck mounted hydraulic system) with the following standard features and included options:

49XX	stainless steel agitator with replaceable steel spring fingers
49XX	stainless steel delivery roller with 8mm steel cams
49XX	soft rubber base & standard spring base and spring base adjustment
49XX	conveyor belt
49XX	galvanized feed funnel and inspection ladder
49XX	central grease bank
608953	hydraulic fittings JIC – 12 pressure & return- Dealer to supply hydraulic hoses
606162	large distribution box
608362	EpoMaster III controller with RS232 & card reader
609609	ground speed adapter
609026/27	wiring only for work light and wiring and beacon stems for two beacons
608765	hydraulic pressure gauge in machine house
608083	neutral gear
608XXX	auto stop fill, liquid level indicator and camlock coupling for liquid pump off
49XX	safety grate 4" X 4" with 8 degree slope
608134	level indicator for dry material

Epoke S4900 Sirius Combi AST **SMALL** hopper equipped as above with 2 X 245 gallon side tanks.
External front tanks are selected separately- see options below. Select one of the following hopper options:

4908 SMALL 3m3 (3.9 cubic yard) ..... $ 72,280.00
4910 SMALL 3m3 + 1m3 (5.2 cubic yard) add ..... $ 1,705.00
4912 SMALL 3m3 + 2m3 (6.5 cubic yard) add ..... $ 2,060.00

Epoke S4900 Sirius Combi AST **MEDIUM** hopper equipped as above with 2 X 310 gallon side tanks.
External front tanks are selected separately- see options below. Select one of the following hopper options:

4914 MEDIUM 6m3 (7.8 cubic yard) ..... $ 75,415.00
4914 MEDIUM 6m3 + 1m3 (9.1 cubic yard) add ..... $ 1,705.00

Epoke S4900 Sirius Combi AST **LARGE** hopper equipped as above with 2 X 405 gallon side tanks.
External front tanks are selected separately- see options below. Select one of the following hoppers:

4918 LARGE 6m3 (7.8 cubic yard) ..... $ 76,905.00
4919 LARGE 6m3 + 1m3 (9.1 cubic yard) add ..... $ 1,705.00
4920 LARGE 6m3 + 2m3 (10.4 cubic yard) add ..... $ 2,060.00
4921 LARGE 6m3 + 3m3 (11.7 cubic yard) add ..... $ 2,415.00

Select one of the following chute arrangements:

608774	Short chute arrangement for truck bed height 1072 - 1377 mm (42" to 54")
608773	Long chute arrangement for truck bed height 1415 – 1770 mm (55" to 70")

EPOKE S4900/ 4902 SIRIUS COMBI AST

MSRP USD
FOB DESTINATION, NORTH AMERICA

Paint: Spreaders are painted standard Epoke RAL 2011 orange. Other RAL colors are available at a Dealer net cost of $ 1,365.00 per order. This cost is for cleaning and changeover and is a total net *per order*- for one or multiple spreaders that are ordered at the same time.

Options:

External Front Tanks:
608193 265 gallon ..... $ 4,565.00
609337 460 gallon ..... $ 8,320.00
608844 660 gallon ..... $ 10,470.00
60933X 1,125 gallon ..... $ 14,775.00
608845 1,320 gallon ..... $ 14,775.00
60933X 1,785 gallon ..... $ 21,225.00
608846 1,980 gallon available on **SMALL** hopper only ..... $ 21,225.00
60933X 2,445 gallon available on **SMALL** hopper only ..... $ 27,680.00

49XX Leg system (includes the following): ..... $ 7,940.00
608062 17 ton brackets; 608243 rubber protection bars on subframe; 608648 side marker/ flag; 608664 spring assist for rear legs; 608682 short console frame for front roller; 603992 multiplug kit; 49XX lateral guides

49XX Folding cover ..... $ 3,085.00

608748 'D' ring tie down kit- Dealer installed for 4 points at top corner of hopper/extension ..... $ 290.00

605423 Electric symmetry ..... $ 1,100.00

49XX Lighting includes LED Megabeam work light and two LED rotating orange beacons ..... $ 1,195.00

608665/ 609895 Frame mount kit includes 1 front pivot and 1 or 2 rear supports as required ..... $ 2,900.00

604577 Air temperature sensor ..... $ 405.00

603320 Proximity sensor for two plows ..... $ 810.00

609154 Extreme duty spinner disc and wings for sand use ..... $ 580.00

4902 High Speed Combi includes the following features and operating specifications ..... $ 12,270.00

- 3800 spinner disc (in lieu of 4900 spinner disc) and 3 cylinder, 115 cc liquid pump
- a second 6 cylinder, 280cc liquid pump for straight liquid application
- 1.2 m (4') spray boom
- 11 Spratronic Nozzles (3 center deflector type nozzles; 4 left & 4 right pencil nozzles)
- liquid spray widths of 3 to 11 m (10' to 36') in 1m (3') increments
- liquid application rates of up to 75 gallons/minute speeds up to 55 mph

EPOKE VIRTUS AST LIQUID SPREADER

MSRP USD
FOB DESTINATION, NORTH AMERICA

Epoke Virtus AST road speed related truck mounted high speed liquid spreader (driven by truck mounted hydraulic system) with the following standard features and included options:

24XX	2 X 6 cylinder 280cc liquid pumps
24XX	11 Spratronic Nozzles- 3 centre deflector type nozzles and 4 left & right pencil nozzles on 2.5 meter (8') boom
608286	hydraulic fittings JIC – 12 pressure & return- Dealer to supply hydraulic hoses
606161/ 438685	standard distribution box & ground speed adapter
608362	EpoMaster III controller with RS232 & card reader

Epoke Virtus 'AST KIT' equipped as above (without machine house) for installation & connection to locally sourced tank and frame ..... $ 49,625.00

Epoke Virtus 'CITY AST' equipped as above (with machine house & installed sprayboom) for installation and connection to locally sourced tank and frame ..... $ 60,180.00

Epoke Virtus AST High Speed Liquid Spreader equipped as above with a subframe, machine house and modular frame & liquid tank system- select one of the following liquid hopper options:

3032 7500L (1,980 gallon) ..... $ 97,710.00
3033 10000L (2,640 gallon) ..... $ 102,260.00
3034 12500L (3,300 gallon) ..... $ 106,810.00
3035 15000L (4,000 gallon) ..... $ 111,360.00
3036 17500L (4,600 gallon) ..... $ 117,555.00

Paint: Spreaders are painted standard Epoke RAL 2011 orange. Other RAL colors are available at a Dealer net cost of $ 1,365.00 per order. This cost is for cleaning and changeover and is a total net *per order*- for one or multiple spreaders that are ordered at the same time.

Options:

608422 Liquid empty sensor ..... $ 515.00

608423 Auto-stop of liquid filling ..... $ 360.00

24XX Leg System with side rollers (includes the following) ..... $ 6,840.00
608062 17 ton brackets; 608243 rubber protection bars on subframe; 608648 side marker/ flag; 608664 spring assist for rear legs; 608682 short console frame for front roller & 603992 multiplug kit

24XX Lateral Guides in lieu of side rollers ..... $ 2,180.00

608748 'D' ring tie down kit- Dealer installed for 4 points at top corner of hopper/extension ..... $ 290.00

606162 Large Distribution box with RS232 ..... $ 920.00

24XX LED Megabeam work lights (1 installed at spray boom) ..... $ 365.00

24XX LED Megabeam work lights (2 installed at spray boom including wiring) ..... $ 770.00

24XX Beacon lighting including two LED rotating orange beacons ..... $ 830.00

604577 Air temperature sensor ..... $ 405.00

603320 Proximity sensor for two plows ..... $ 810.00

609892 Diesel engine/ hydraulic pump with fuel level indicator ..... $ 28,800.00

608777 Hose wand with 15m hose drum ..... $ 5,385.00

607000 JET Power option includes front mounted boom and nozzles ..... $ 22,770.00

EPOKE VIRTUS AST LIQUID SPREADER

MSRP USD
FOB DESTINATION, NORTH AMERICA

610163 JET Power hose wand with 20m hose drum.....$ 5,655.00

EPOKE IGLOO

MSRP USD
FOB DESTINATION, NORTH AMERICA

Epoke Igloo truck mounted spreader (driven by truck mounted hydraulic system) with the following standard features and included options:

2XXX	standard profiled conveyor belt
2XXX	SH- operation by vehicle hydraulics- Dealer to supply hydraulic hoses
2XXX	spreading disc
606161	standard distribution box
2XXX	standard controller: EpoSet for 2300; EpoBasic for 2400 only
438685	ground speed adapter (2400 only)
600XXX	wiring only for work light and one beacon
605663	manual spread symmetry (electric symmetry option available on S2400- see below)

Epoke Igloo S2300 (NOT road speed related) spreader equipped as above- select one of the following hopper options:

2470 0.8m3 (1.0 cubic yard) ..... $ 20,845.00
605106 0.15m3 (0.2 cubic yard) hopper extension for above ..... $ 660.00
605107 0.3m3 (0.4 cubic yard) hopper extension for above ..... $ 780.00

2471 1.1m3 (1.4 cubic yard) ..... $ 22,180.00
608019 0.3m3 (0.4 cubic yard) hopper extension for above ..... $ 875.00
605108 0.5m3 (0.65 cubic yard) hopper extension for above ..... $ 950.00

2472 1.4m3 (1.8 cubic yard) ..... $ 23,520.00
606491 0.2m3 (0.25 cubic yard) hopper extension for above ..... $ 895.00
605109 0.6m3 (0.8 cubic yard) hopper extension for above ..... $ 1,010.00

Epoke Igloo S2400 (road speed related) spreader equipped as above- select one of the following hopper options:

2485 0.6m3 (0.8 cubic yard) ..... $ 27,785.00
605107 0.2m3 (0.25 cubic yard) hopper extension for above ..... $ 720.00

2444 0.8m3 (1.0 cubic yard) ..... $ 29,140.00
605106 0.15m3 (0.2 cubic yard) hopper extension for above ..... $ 660.00
605107 0.3m3 (0.4 cubic yard) hopper extension for above ..... $ 780.00

2446 1.1m3 (1.4 cubic yard) ..... $ 30,475.00
608019 0.3m3 (0.4 cubic yard) hopper extension for above ..... $ 875.00
605108 0.5m3 (0.65 cubic yard) hopper extension for above ..... $ 950.00

2448 1.4m3 (1.8 cubic yard) ..... $ 31,825.00
606491 0.2m3 (0.25 cubic yard) hopper extension for above ..... $ 895.00
605109 0.6m3 (0.8 cubic yard) hopper extension for above ..... $ 1,010.00

EPOKE IGLOO

MSRP USD
FOB DESTINATION, NORTH AMERICA

Select one of the following chute arrangements:

249X	Short chute arrangement for truck bed height 700 - 800 mm (27.5" to 31.5")
249X	Medium chute arrangement for truck bed height 850 – 1200 mm (33.5" to 47")
249X	Long chute arrangement for truck bed height 1100 – 1500 mm (43.5" to 59")

Paint: Spreaders are painted standard Epoke RAL 2011 orange. Other RAL colors are available at a Dealer net cost of $ 1,365.00 per order. This cost is for cleaning and changeover and is a total net *per order*- for one or multiple spreaders that are ordered at the same time.

Options:

Liquid System- select one of the following: ..... $ 9,795.00
24XX Igloo 0.6m3 includes 2 X 114L (2 X 30 gallon) side tanks
24XX Igloo 0.8m3 includes 2 X 170L (2 X 45 gallon) side tanks
24XX Igloo 1.1m3 includes 4 X 114L (4 X 30 gallon) side tanks
24XX Igloo 1.4m3includes 2 X 170L & 2 X 114L (2 X 45 gallon & 2 X 30 gallon) side tanks
Each of the above include 606XXX prewetting system fixed at 30% & 605038 shut off valve
604175 Liquid level indicator ..... $ 515.00
608186 Auto-stop of liquid filling ..... $ 360.00

24XX Support leg system- long, side mounted (width is 2670 mm/ 8'9") ..... $ 3,200.00

24XX Safety Grate 50mm X 50mm (2" X 2") flat ..... $ 995.00

24XX Folding cover ..... $ 2,400.00

608362 EpoMaster III with RS232 & card reader (available on S2400 only) ..... $ 3,840.00

606162 Large Distribution box with RS232 (available on S2400 only) ..... $ 920.00

605298 Electric symmetry (available on S2400 only) ..... $ 1,350.00

24XX Lighting includes LED Megabeam work light & two LED beacons ..... $ 1,195.00

604577 Air temperature sensor (available on S2400 with EpoMaster III & large distribution box only) ..... $ 405.00

603320 Proximity sensor for two plows (available on S2400 with EpoMaster III & large distribution box only) $ 810.00

249X Engine/ hydraulic power (available on S2300 only) 5.5 HP Honda gas engine with manual start ..... $ 3,645.00

249X Engine/ hydraulic power (available on S2400 only) 9.0 HP Honda gas engine controlled by EpoBasic/ EpoMaster ..... $ 5,460.00

EPOSAT
GPS Controlled Spreading With Route Navigation

MSRP USD
FOB DESTINATION, NORTH AMERICA

Eposat GPS controlled automated spreading system with route navigation consists of two components- EpoSat office software package and an EpoSat hardware package to be installed on each spreader.

EpoSat Office Software Package

EpoSat office software package for installation on customer's PC:

- Includes a digital map displaying roads, road names, cities, forests, watercourses etc.
- Includes Omni Drive card reader and one EpoCard for reference route recording
- Includes 1 year license for EpoSat and digital mapping software
- PC requirements for EpoSat software installation: Pentium 4; Processor minimum 2.0 GHz (recommended 2.8 GHz); 256MB RAM; DVD Drive; 1 GB free space on hard drive; Color screen- 1024*768 resolution; Software: Windows 2000 or newer

606749 EpoSat office software package equipped as above for up to 50 spreaders/ 1 installation
Retail Price.....$ 15,700.00 each
606913 EpoSat office software package equipped as above for up to 100 spreaders/ 2 installations
Retail Price.....$ 14,370.00 each
606914 EpoSat office software package equipped as above for up to 150 spreaders/ 3 installations
Retail Price.....$ 13,065.00 each
606915 EpoSat office software package equipped as above for up to 200 spreaders/ 4 installations
Retail Price.....$ 11,765.00 each
606916 EpoSat office software package equipped as above for over 200 spreaders/ 5 installations (or more)
Retail Price.....$ 10,465.00 each

Optional Office Software Updates:
607806 annual (autumn release) update license for EpoSat software and digital map.....$ 4,055.00
607807 (if annual subscriptions are not purchased) update license for EpoSat software and digital map .....$ 11,255.00

EpoSat Hardware Package

EpoSat hardware package for installation on each spreader- spreader must be equipped with PWM hydraulic system and EpoMaster III with card reader. Kit includes: active GPS antenna kit, EpoSat GPS print, in cab route navigation box and installation when factory ordered on new spreaders.
Dealer installed on exiting spreaders- Dealer to quote labor for installation

600 # Varies by Model and Factory or Field Install- Contact ENAI for Ordering Information
EpoSat spreader hardware package
Retail Price.....$ 7,990.00 each***
***Spreaders may require upgrades (at additional cost) to take advantage of all of the latest EpoSat features. Provide serial number(s) to ENAI to request a quote for the required upgrade kit.

EpoSat Simulator Kit

EpoSat simulator kit for route set up and adjustment. Kit includes: active GPS antenna; distribution and white box with EpoSat GPS print; PWM and CPU boards; plug for 12 volt power point. EpoMaster III controller is required- but is not included
607767 EpoSat simulator kit.....$ 4,490.00

Epoke Price List: NJPA Contract

Epoke Towed Spreaders

NJPA members are subject to a 5% discount on Epoke Towed Spreaders.

Towed Spreaders models included are: EpoMini 5, EpoMini 20, ITM 35, ITM 45, ITM 60, PM 1.4, PMH 1.4, PSL 6.5, SKE8, SKE15, SKE20, TKB12-280, TMK10-275, TP3, and TP9.

Model pricing sheets follow this page.

****Minimum Order Quantity for EpoMini 5 is 4 units**

****Minimum Order Quantity for EpoMini 20 is 2 units**

EPOMINI 5

MSRP USD
FOB DESTINATION, NORTH AMERICA

EpoMini 5 manually operated road speed related spreader with the following standard features and included options:

1807 standard agitator
1807 rubber base
1807 spring base and spring base adjustment
1807 transmission
1807 delivery roller with 3mm cams
1807 pneumatic wheels

Retail Price.....$ 1,360.00

**Minimum order of 4 units

Technical Data:

Capacity:	50 liters	0.025 cubic yard
Total Width:	750 mm	29.5"
Spreading Width:	550 mm	22"
Weight:	30 kg	66 lbs

EPOMINI 20

MSRP USD
FOB DESTINATION, NORTH AMERICA

EpoMini 20 towed road speed related spreader with the following standard features and included options:

1821 standard agitator
1821 rubber base
1821 spring base and spring base adjustment
1821 transmission
1821 delivery roller with 3 mm double cams
1821 pneumatic wheels
1821 manually operated remote on/off

Retail Price.....$ 3,170.00

One of the following draw system options must also be selected:

600706 drawbar with 1 7/8" trailer ball coupling.....$ 515.00
600743 drawbar with 25 mm eye.....$ 290.00
600693 drawbar with 38mm eye.....$ 290.00
600744 drawbar with fork.....$ 290.00
600785 three point hitch bracket.....$ 685.00

**Minimum order of 2 units

Technical Data:

Capacity:	200 liters	0.26 cubic yard
Total Width:	1065 mm	42"
Spreading Width:	800 mm	31.5"
Weight:	75 kg	165 lbs

ITM 35

MSRP USD
FOB DESTINATION, NORTH AMERICA

Epoke ITM 35 road speed related towed spreader with the following standard features and included options:

1501	standard rubber base
1501	spring base and spring base adjustment
1501	transmission
1501	pneumatic wheels
600584	agitator
604121	delivery roller with 5 mm double cams

Retail Price.....$ 5,575.00

One of the following draw system options must also be selected:
600019 reversible drawbar with 1 7/8" trailer ball coupler and 50 mm eye.....$ 610.00
601461 three point hitch mount.....$ 1,460.00

Options (available as kits for Dealer install):
600030 lights.....$ 700.00
600028 electric remote control.....$ 1,985.00
600029 electric remote control and lights.....$ 2,685.00
600776 support leg.....$ 210.00

Technical Data:

Capacity:	350 liters	½ cubic yard
Total Width:	1150 mm	45"
Track Gauge:	1028 mm	40.5"
Spreading Width:	780 mm	31"
Weight:	145 kg	320 lbs

ITM 45

MSRP USD
FOB DESTINATION, NORTH AMERICA

Epoke ITM 45 road speed related towed spreader with the following standard features and included options:

1502	standard rubber base
1502	spring base and spring base adjustment
1502	pneumatic wheels
600962	transmission without reduction
600966	agitator
604087	delivery roller with 3 mm single cams

Retail Price ..... $ 8,020.00

One of the following draw system options must also be selected:
600019 reversible drawbar with 1 7/8" trailer ball coupler and 50 mm eye ..... $ 610.00
600024 lift truck fitting with support legs ..... $ 770.00
601189 three point hitch mount ..... $ 1,900.00

Options (available as kits for Dealer install):
600030 lights ..... $ 700.00
600028 electric remote control ..... $ 1,985.00
600029 electric remote control and lights ..... $ 2,685.00
600776 support leg ..... $ 210.00
605022 250L (1/3 cubic yard) hopper extension ..... $ 755.00

Technical Data:

Capacity:	450 liters	5/8 cubic yard
Total Width:	1435 mm	56.5"
Track Gauge:	1290 mm	51"
Spreading Width:	1010 mm	40"
Weight:	192 kg	423 lbs

ITM 60

MSRP USD
FOB DESTINATION, NORTH AMERICA

Epoke ITM 60 road speed related towed spreader with the following standard features and included options:

1503	standard rubber base
1503	spring base and spring base adjustment
1503	pneumatic wheels
600962	transmission without reduction
604131	delivery roller with 3 mm single cams
605211	agitator

Retail Price..... $ 8,370.00

One of the following draw system options must also be selected:
600019 reversible drawbar with 1 7/8" trailer ball coupler and 50 mm eye..... $ 610.00
600024 lift truck fitting with support legs ..... $ 770.00
601189 three point hitch mounting ..... $ 1,900.00

Options (available as kits for Dealer install):
600044 lights..... $ 700.00
600028 electric remote control ..... $ 1,985.00
600043 electric remote control and lights..... $ 2,685.00
600776 support leg..... $ 210.00

Technical Data:

Capacity:	600 liters	3/4 cubic yard
Total Width:	1895 mm	75"
Track Gauge:	1730 mm	68"
Spreading Width:	1460 mm	57.5"
Weight:	220 kg	485 lbs

PM1.4

MSRP USD
FOB DESTINATION, NORTH AMERICA

Epoke PM1.4 three-point hitch mounted, mechanically driven (by power take-off of tractor) spreader with the following standard features and included options:

3305	agitator
3305	safety grate
3305	standard rubber base
3305	spring base and spring base adjustment
432495	cardan shaft, 1 3/8" X 6 hub. Length = 310 mm (12")
604289	transmission, 540 RPM right
604295	delivery roller with 3 mm cams
604719	rubber edge for fine material

Retail Price.....$ 5,940.00

Options:
604292 hopper extension- 60 liter (0.08 cubic yard).....$ 600.00
605705 hopper extension- 140 liter (0.18 cubic yard).....$ 725.00

Technical Data:

Capacity:	140 liters	0.18 cubic yard
Total Width:	1091 mm	43"
Spreading Width:	1010 mm	40"
Weight:	91 kg	201 lbs

PMH1.4

MSRP USD
FOB DESTINATION, NORTH AMERICA

Epoke PMH1.4 three-point hitch mounted, hydraulically driven (by tractor hydraulics at a flow rate of 10 – 40 liters/minute) spreader with the following standard features and included options:

3307	agitator
3307	safety grate
3307	standard rubber base
3307	spring base and spring base adjustment
604295	delivery roller with 3 mm cams
604719	rubber edge for fine material

Retail Price.....$ 5,185.00

Select one of the following transmissions:

604410	transmission 30 liter (8 gallons)
605729	transmission 15 liter (4 gallons)

Options:
604292 hopper extension- 60 liter (0.08 cubic yard).....$ 600.00
605705 hopper extension- 140 liter (0.18 cubic yard).....$ 725.00

Technical Data:

Capacity:	140 liters	0.18 cubic yard
Total Width:	1091 mm	43"
Spreading Width:	1010 mm	40"
Weight:	85 kg	188 lbs

SKE 8

MSRP USD
FOB DESTINATION, NORTH AMERICA

Epoke SKE 8 road speed related towed spreader with the following standard features and included options:

1001	spring base and spring base adjustment
1001	transmission
200591	76 mm draweye
600219	agitator
600220	rubber base for salt
600224	solid support wheel
600969	24% reduction
601740	lights
601938	electric remote
604314	delivery roller with 8 mm double cams
606612	6.00 X 9 12 ply tires

Retail Price..... $ 17,135.00

Select one of the following drawbars:

600225	685 mm (27") drawbar
600226	1085 mm (43") drawbar

Options:
600231 second agitator shaft (Parts kit- Dealer Installed)..... $ 1,810.00

City Combi Liquid System (factory installed or as a kit to be retrofitted to existing SKE8's)
360 Liter (95 gallon) liquid tanks
Road speed related: 0- 20 km/h
Dry material, pre- wet material and straight liquid application capable

Retail Price..... $ 8,385.00

Technical Data:

Capacity:	750 liters	1.00 cubic yard
Total Width:	1285 mm	50.6"
Track Gauge:	790 mm	31"
Spreading Width (both dry & liquid):	1008 mm	40"
Weight:	400 kg	880 lbs

SKE 15

MSRP USD
FOB DESTINATION, NORTH AMERICA

Epoke SKE 15 road speed related towed spreader with the following standard features and included options:

1004	spring base and spring base adjustment
1004	transmission
1004	solid support wheel
200591	76 mm draweye
600154	rubber base for salt
600261	one-sided transmission
600267	24% reduction
601746	lights
601938	electric remote
601993	agitator
604336	delivery roller with 7 rows 3 mm single cams
605229	7.50 X 10 14 ply tires

Retail Price.....$ 22,810.00

Options:
600406 0.5m3 (0.65 cubic yard) hopper extension.....$ 785.00

Technical Data:

Capacity:	1.25 cubic meters	1.64 cubic yard
Total Width:	1665 mm	65.5"
Track Gauge:	1000 mm	31"
Spreading Width:	1390 mm	55"
Weight:	600 kg	1,323 lbs

SKE 20

MSRP USD
FOB DESTINATION, NORTH AMERICA

Epoke SKE 20 road speed related towed spreader with the following standard features and included options:

1005	spring base and spring base adjustment
1005	transmission
1005	solid support wheel
200591	76 mm draweye
600088	rubber base for salt
600261	one-sided transmission
600267	24% reduction
601750	lights
601938	electric remote
601994	agitator
604357	delivery roller with 7 rows 3 mm single cams
605229	7.50 X 10 14 ply tires

Retail Price.....$ 24,670.00

Technical Data:

Capacity:	1.65 cubic meters	2.16 cubic yard
Total Width:	2195 mm	86.4"
Track Gauge:	1530 mm	60"
Spreading Width:	1918 mm	75.5"
Weight:	720 kg	1,588 lbs

TKB12-280

MSRP USD
FOB DESTINATION, NORTH AMERICA

Epoke TKB12-280 road speed related towed spreader (spreads when driving forwards and backwards) with the following standard features and included options:

1108	transmission with 38% reduction
1108	spring base and spring base adjustment
1108	agitator
439226	rubber base for salt
600129	76 mm draweye
600878	rubber front edges, low
607741	guide chains, standard (2196 mm)
607994	rubber apron
607923	lights
601938	electric remote
603909	delivery roller with 3 mm double cams
606612	6.00 X 9 12 ply tires
603913	support wheel- solid

Retail Price.....$ 22,375.00

Options:
601592 Hopper Empty Sensor.....$ 480.00

Technical Data:

Capacity:	1.2 cubic meters	1.57 cubic yard
Total Width:	2800 mm	110.2"
Inside Hopper Width	2770 mm	109.1"
Track Gauge:	1800 mm	70.9"
Spreading Width:	2500 mm	98.4"
Weight:	710 kg	1,565 lbs

TMK10-275

MSRP USD
FOB DESTINATION, NORTH AMERICA

Epoke TMK10-275 road speed related towed spreader with the following standard features and included options:

1405	spring base and spring base adjustment
600129	76 mm draweye
600138	guide chains, standard
600142	rubber apron
600280	rubber base for sand
600296	agitator
600878	rubber front edges, low
601754	lights
601938	electric remote
604066	delivery roller with 5 mm double cams
604084	transmission with agitator
606612	6.00 X 9 12S tires

Retail Price.....$ 19,175.00

Options:
601592 Hopper Empty Sensor.....$ 480.00
600273 Lift Truck Bracket.....$ 950.00

Technical Data:

Capacity:	1.00 cubic meters	1.31 cubic yard
Total Width:	2750 mm	108.3"
Inside Hopper Width	2700 mm	106.3"
Track Gauge:	2332 mm	91.8"
Spreading Width:	2000 mm	78.8"
Weight:	400 kg	882 lbs

PSL 6.5

MSRP USD
FOB DESTINATION, NORTH AMERICA

Epoke PSL 6.5 three-point hitch mounted, hydraulically driven (by tractor hydraulic system) self loading spreader with the following standard features and included options:

3330	spring base and spring base adjustment
601664	delivery roller for cams
406985	5 mm cams
601646	rubber base for salt
439204	hydraulic system (without remote control) for double hydraulic connection to tractor

Retail Price ..... $ 11,590.00

Technical Data:

Capacity:	600 liters	¾ cubic yard
Total Width:	1980 mm	78"
Spreading Width:	1770 mm	70"
Weight:	315 kg	695 lbs

EPOKE TP SPREADER

MSRP USD
FOB DESTINATION, NORTH AMERICA

Epoke TP Series Drop and Broadcast Spreader road speed related 3 point hitch tractor mounted spreader (driven by tractor hydraulic system) with the following standard features and included options:

TPXX	Epoke principle with agitator and delivery roller with 5mm cams
TPXX	spring base
TPXX	stainless spreading disc assembly
TPXX	SH- operation by tractor hydraulics- Dealer to supply hydraulic hoses
TPXX	galvanized safety grate 50mm X 50mm (2" X 2") flat
TPXX	standard distribution box
TPXXX	EpoBasic controller
438685	ground speed adapter
TPXX	work light and road lights
TPXX	support legs
TPXX	electric symmetry

Epoke TP3 spreader equipped as above:
TP3 0.3m3 (0.4 cubic yard) dry material capacity .....$ 29,275.00
TP3XX liquid system 200L (53 gal) capacity, prewet fixed at 30% & liquid level indicator .....$ 6,700.00
TP3XX 0.1m3 (0.13 cubic yard) hopper extension .....$ 660.00
TP3XX 0.2m3 (0.25 cubic yard) hopper extension .....$ 795.00
TP3XX 0.3m3 (0.4 cubic yard) hopper extension .....$ 895.00

Epoke TP9 spreader equipped as above:
TP9 0.9m3 (1.2 cubic yard) dry material capacity .....$ 33,895.00
TP9XX liquid system 500L (132 gal) capacity, prewet fixed at 30% & liquid level indicator ...$ 8,035.00
TP9XX 0.3m3 (0.4 cubic yard) hopper extension .....$ 900.00
TP9XX 0.6m3 (0.8 cubic yard) hopper extension .....$ 1,105.00

Paint: Spreaders are painted standard Epoke RAL 2011 orange. Other RAL colors are available at a Dealer net cost of $ 1,435.00 per order. This cost is for cleaning and changeover and is a total net *per order*- for one or multiple spreaders that are ordered at the same time.

Options:

TP9X self-loading option (for TP9 only) from tractor hydraulic system .....$ 10,280.00

TPXX cover .....$ 1,080.00

TPXX PTO drive (in lieu of hydraulic supply from tractor) .....$ 3,560.00

MODEL: BROOM BADGER
EFFECTIVE DATE: 01/01/2018
SUPERCEDES ALL PREVIOUS PRICE LISTS
DEALER PRICE LIST (U.S. DOLLARS)
REV # 3 8/01/2018

Purchase Order #	**Ship To Address:**
Order Date:	
Delivery Date Requirment If Any:	**State Penalty Clause If Applicable:**

QUANTITY	PART NUMBER	MODEL DESCRIPTION	2018 LIST PRICE	2018 EXTENDED
0	5801001	**BROOM BADGER - DUAL SIDE BROOMS** **LEFT SIDE DUMPING HOPPER** Rear-axle air suspension, conveyor squeegee, dual, hydraulically driven side brooms, variable height up to 10', left side dumping hopper. Sweeper is painted Elgin white and includes the standard features listed below.	$133,815	$0.00
0	5801008	**BROOM BADGER - DUAL SIDE BROOMS** **RIGHT SIDE DUMPING HOPPER** Rear-axle air suspension, conveyor squeegee, dual, hydraulically driven side brooms, variable height up to 10', right side dumping hopper. sweeper is painted Elgin white and includes the standard features listed below.	$133,815	$0.00
0	5801017	USA 2019 ISUZU NRR LEFT HAND STEER INCLUDES MOUNTING CHARGE	$64,360	$0.00
0	5801115	**DUALIZATION FOR 2018 MY**	$12,750	$0.00
0	NO CHARGE	**CHASSIS MOUNTING CHARGE**	N/C	$0.00

NOTE: Customer supplied chassis are not accepted due to Isuzu controled modicifations.

NOTE: One year warranty on all Elgin supplied parts and labor. Consult your Elgin dealer for full warranty details.

STANDARD FEATURES

AM/FM Radio w/ CD
Aux-engine Kubota V2403M 59hp, Tier 4i
Aux-engine Murphy shut down system
Low engine oil pressure, high coolant temp, hyd oil level/temp shutdown
Broom side, 36" and 42" steel vertical digger 4 and 5 segment
Broom side, hydraulic floating suspension, adjustable spring loaded deploy
Broom, main, 34" diameter, 58" wide prefab disposable
Camera, Rear and RH side view with in-cab monitor
Chromed shaft pivots
Conveyor chain, hardened with polyurethane sprockets
Conveyor, 8 flight squeegee with rubber edging
Conveyor, lift independent from main broom
Conveyor, two piece replaceable wear plates
Conveyor raise automatic in reverse
Conveyor stall alarm
Dirt shoes, heavy duty steel
Electric backup alarm
Front spray bar
Greaseless composite bushings
Hopper inspection door
Hydraulic pump,variable dispacement, load-sense,piston type
PM 10 Compliant (RULE 1186)
Rear Axle Air Suspension
Operators and Service Manual
Sidebroom Tilt Right Hand
Sidebroom Tilt Left Hand

MODEL: BROOM BADGER
EFFECTIVE DATE: 01/01/2018
SUPERCEDES ALL PREVIOUS PRICE LISTS
DEALER PRICE LIST (U.S. DOLLARS)
REV # 2 8/01/2018

QUANTITY	PART NUMBER	MODEL DESCRIPTION	2018 LIST PRICE	2018 EXTENDED
		----------BROOMS---------		
0	5801104	STRIP MAIN BROOM ILO STD	$650.00	$0.00
		---------LIGHTS----------		
0	5801103	AMBER STROBE MOUNTED DIRECTLY BEHIND TRUCK CAB, VISIBLE FROM IN FRONT OF THE TRUCK	$440.00	$0.00
0	5801105	REAR MOUNTED LED LIGHTBAR	$1,875.00	$0.00
0	5801113	SECOND AMBER REAR STROBE MOUNTED ON THE CURBSIDE IN ADDITION TO THE STANDARD STREET SIDE AMBER STROBE	$325.00	$0.00
0	5801126	REAR LED TAIL LIGHTS (INCLUDES STOP, BACKUP, TURN AND TAIL)	$540.00	$0.00
		-------PM10 OPTIONS-------		
0	STANDARD	PM10 COMPLIANT (RULE 1186)	N/C	$0.00
		----------SAFETY----------		
0	SPECIAL	REMOVE REAR CAMERA (DEDUCT)	N/C	$0.00
		-------SWEEP COMPONTENTS--		
0	STANDARD	SIDE BROOM TILT - RIGHT	N/C	$0.00
0	STANDARD	SIDE BROOM TILT - LEFT	N/C	$0.00
		----- MANUALS----		
0	0701669	ADDITIONAL BROOM BADGER OPERATORS MANUAL	$65.00	$0.00
0	0702230	BROOM BADGER PARTS MANUAL	CONTACT MIMEO	$0.00
		--------WATER SYSTEM------		
0	5801107	CONVEYOR FLUSHER	$1,150.00	$0.00
		--ISUZU NRR CHASSIS OPTIONS---		
0	5801134	REAR LEAF SPRING SUSPENSION IN LIEU OF STANDARD AIR SUSPENSION REAR AXLE (DEDUCT)	-$4,250.00	$0.00
		---------WARRANTY---------		
0	EW-MECH-NA-2PL	SECOND YEAR WARRANTY PARTS/LABOR MODULE ONLY (EXCL. AUX ENG)	$5,870	$0.00
0	EW-MECH-NA-3PL	THIRD YEAR WARRANTY PARTS/LABOR MODULE ONLY (EXCL. AUX ENG)	$11,110	$0.00

MODEL: BROOM BADGER
EFFECTIVE DATE: 01/01/2018
SUPERCEDES ALL PREVIOUS PRICE LISTS
DEALER PRICE LIST (U.S. DOLLARS)
REV # 2 8/01/2018

QUANTITY	PART NUMBER	MODEL DESCRIPTION	2018 LIST PRICE	2018 EXTENDED
		------FREIGHT RATES------		
0	FRT-139-001	SELF SHIPPING DOCK CHARGE	$520.00	$0.00
0	FRT-139-900	ALASKA	call for quote	$0.00
0	FRT-139-901	ALABAMA	$3,875.00	$0.00
0	FRT-139-902	ARKANSAS	$3,175.00	$0.00
0	FRT-139-903	ARIZONA	$4,425.00	$0.00
0	FRT-139-904	CALIFORNIA	$5,415.00	$0.00
0	FRT-139-905	COLORADO	$4,225.00	$0.00
0	FRT-139-906	CONNECTICUT	$4,550.00	$0.00
0	FRT-139-907	DELAWARE	$4,290.00	$0.00
0	FRT-139-908	FLORIDA	$5,515.00	$0.00
0	FRT-139-909	GEORGIA	$4,540.00	$0.00
0	FRT-139-910	HAWAII	call for quote	$0.00
0	FRT-139-911	IOWA	$2,075.00	$0.00
0	FRT-139-912	IDAHO	$4,015.00	$0.00
0	FRT-139-913	ILLINOIS	$2,265.00	$0.00
0	FRT-139-914	INDIANA	$2,750.00	$0.00
0	FRT-139-915	KANSAS	$2,375.00	$0.00
0	FRT-139-916	KENTUCKY	$3,040.00	$0.00
0	FRT-139-917	LOUISIANA	$4,500.00	$0.00
0	FRT-139-918	MASSACHUSETTS	$4,600.00	$0.00
0	FRT-139-919	MARYLAND	$4,115.00	$0.00
0	FRT-139-920	MAINE	$5,625.00	$0.00
0	FRT-139-921	MICHIGAN	$2,495.00	$0.00
0	FRT-139-922	MINNESOTA	$1,710.00	$0.00
0	FRT-139-923	MISSOURI	$3,075.00	$0.00
0	FRT-139-924	MISSISSIPPI	$3,910.00	$0.00
0	FRT-139-925	MONTANA	$3,600.00	$0.00
0	FRT-139-926	NORTH CAROLINA	$4,040.00	$0.00
0	FRT-139-927	NORTH DAKOTA	$1,645.00	$0.00
0	FRT-139-928	NEBRASKA	$2,125.00	$0.00
0	FRT-139-929	NEW HAMPSHIRE	$4,725.00	$0.00
0	FRT-139-930	NEW JERSEY	$4,285.00	$0.00
0	FRT-139-931	NEW MEXICO	$4,335.00	$0.00
0	FRT-139-932	NEVADA	$4,390.00	$0.00
0	FRT-139-933	NEW YORK	$5,940.00	$0.00
0	FRT-139-934	OHIO	$3,190.00	$0.00
0	FRT-139-935	OKLAHOMA	$3,210.00	$0.00
0	FRT-139-936	OREGON	$4,695.00	$0.00
0	FRT-139-937	PENNSYLVANIA	$3,665.00	$0.00
0	FRT-139-938	RHODE ISLAND	$4,745.00	$0.00
0	FRT-139-939	SOUTH CAROLINA	$4,160.00	$0.00
0	FRT-139-940	SOUTH DAKOTA	$1,970.00	$0.00
0	FRT-139-941	TENNESSEE	$3,415.00	$0.00
0	FRT-139-942	TEXAS	$4,185.00	$0.00
0	FRT-139-943	UTAH	$3,820.00	$0.00
0	FRT-139-944	VIRGINIA	$4,040.00	$0.00
0	FRT-139-945	VERMONT	$5,020.00	$0.00
0	FRT-139-946	WASHINGTON	$4,650.00	$0.00
0	FRT-139-947	WISCONSIN	$2,215.00	$0.00
0	FRT-139-948	WEST VIRGINIA	$3,440.00	$0.00
0	FRT-139-949	WYOMING	$3,190.00	$0.00

*****NOTE CALL FOR FREIGHT QUOTE IF YOU HAVE MORE THAN ONE UNIT SHIPPING SIMULTANEOUSLY*****

SUB TOTAL	**$0.00**

		-----DISCOUNTS-----		
0	DISC-139-ADDL	ADDITIONAL DISCOUNT	$0.00	$0.00
0	DISC-139-PROMO	PROMO DISCOUNT	$0.00	$0.00

GRAND TOTAL	**$0.00**

MODEL: BROOM BEAR ALT. FUEL
EFFECTIVE DATE: 01/01/2019
SUPERCEDES ALL PREVIOUS PRICE LISTS
DEALER PRICE LIST (U.S. DOLLARS)

Purchase Order #	**Ship To Address:**
Order Date:	
Delivery Date Requirment If Any:	**State Penalty Clause If Applicable:**

QUANTITY	PART NUMBER	MODEL DESCRIPTION	2019 LIST PRICE	2019 EXTENDED
0	1113137	**BROOM BEAR DUAL FOR CNG FUEL**	$155,625	$0.00
		Variable height, right side dumping, 4.5 cu. yd. hopper, with dual, hydraulically driven, trailing arm sidebrooms, sweeper is powder coated from powder coatings chart 2003/N with powder coated gray undercarriage and including the standard features listed below.		

CHASSIS

0	SPECIAL	M2 112 FACTORY CNG POWERED (3 TANK 50 DGE system)	CONTACT INSIDE SALES	$0.00
		DGE = diesel gallon equivalent)		

CHASSIS MOUNTING CHARGE

0	SPECIAL	M2 - CHASSIS ALTERATIONS	$2,625	$0.00
0	SPECIAL	CHASSIS ALTERATIONS FOR CUSTOMER SUPPLIED CHASSIS	SPECIAL	$0.00
0	CSC-HANDLING	CUSTOMER SUPPLIED HANDLING CHARGE	$2,815	$0.00

NOTE: Customer Supplied Cassis Requires Both The Chassis Alterations and the Handling Charge
NOTE: A BODY includes the cost of Elgin standard white finish paint. It does not however, include the price of the
NOTE: The chassis being supplied by a customer or dealer **must** comply completely with all Elgin requirements or
NOTE: For cost of sweeper mounted on any other chassis, consult factory.
NOTE: One year warranty on all Elgin supplied parts and labor. Consult your Elgin dealer for full warranty details.

STANDARD FEATURES

1	0701683	BROOM BEAR CNG OPERATORS MANUAL	STANDARD	$0.00
1	0702243	BROOM BEAR CNG PARTS MANUAL	STANDARD	$0.00
1	0730166	BROOM MEASUREMENT RULER	STANDARD	$0.00
1	1032481	16' 8" WATER FILL HOSE	STANDARD	$0.00
1	0701707	MACHINE DELIVERY PACKET	STANDARD	$0.00
1	0702020	ELGIN SAFETY MANUAL	STANDARD	$0.00

Broom side, 46 "steel vertical digger 4 or 5 segment
Broom side, air floating suspension with adjustable pin stops, air deploy mounted under cab doors
Broom, main, 34" diameter, 60" wide prefab disposable
Broom, main adjustable spring and lever float
Camera, Rear with in-cab monitor
Conveyer chain, hardened with polyurethane sprockets
Conveyer, 11 flight squeegee with rubber edging
Conveyer, lift independent from main broom
Conveyer, three piece replaceable wear plates
Conveyor flush out system
Conveyor raise in reverse
Conveyer stall alarm
Dirt shoes, heavy duty single row carbide steel (rubber isolated)
Electric backup alarm
Hopper, 4.5 cu yd with window and skylight
Hopper up indicator and beep
Hopper, variable high dump, 9'6", 4.5 yard
Hopper inspection door
Hose, hydrant fill, 16'8" (5080 mm) with strainer and coupling
Hydraulic oil level gauge w/external thermomenter and in-cab level light
Hydraulic system, load sensing with selectable transmission driven PTO pump
Lights, automatic backup
Lights, combination tail/stop, separate amber signal
Lights, flood light, one per broom (3)
Manuals, operator and parts
Rear broom cover and anti-carryover wrap
Rear broom spray bar
Rear right hand flood light
Reflectors, set of 6
Sidebroom speed control, external to cab
Sweep resume / raise in reverse
Tactile controls for all sweep functions
Tool storage
Water fill, anti-siphon
Water level indicator in-cab
Water Pump, electric diaphragm
Water tank, molded polyethylene, 360 gallon total nominal capacity

MODEL: BROOM BEAR ALT. FUEL
EFFECTIVE DATE: 01/01/2019
SUPERCEDES ALL PREVIOUS PRICE LISTS
DEALER PRICE LIST (U.S. DOLLARS)

QUANTITY	PART NUMBER	MODEL DESCRIPTION	2019 LIST PRICE	2019 EXTENDED
		-----ALARMS/INDICATORS----		
0	SPECIAL	ECCO SA940 SMART ALARM (ILO of STD)	$285.00	$0.00
0	1101528	CONVEYOR REVERSE LIGHT WITH ALARM	$410.00	$0.00
0	1104970	HOPPER UP CONSTANT ALARM	$375.00	$0.00
0	1104705	HOPPER FULL INDICATOR	$815.00	$0.00
		-------AUTO LUBE----------		
0	1101559	MIDWEST AUTO LUBE - SWEEPER ONLY	$5,160.00	$0.00
		----------BROOMS---------		
0	1058158	STRIP MAINBROOM (URB)	$460.00	$0.00
0	1077151	URB STRIP MAINBROOM W/CENTER SWEEP MANDREL	$460.00	$0.00
0	SPECIAL	DEDUCT MAINBROOM FILLER	N/C	$0.00
0	1096691	DEDUCT MAINBROOM & CORE	-$278.40	$0.00
0	1115499	HYDRAULIC FLOAT MAINBROOM SUSPENSION	$0.00	$0.00
		----------DECALS---------		
1	1117939	RED DECALS - BROOM BEAR	$0.00	$0.00
0	1117940	WHITE DECALS - BROOM BEAR	$0.00	$0.00
0	1101037	SLOW MOVING VEHICLE SIGN	$165.00	$0.00
0	1122929	SHIP DECALS AND SWOOSH LOOSE IN HOPPER	$0.00	$0.00
		--------GAUGES----------		
0	1101379	BROOM HOUR METERS	$395.00	$0.00
0	1111656	HYDRAULIC OIL TEMP DISPLAY (IN CAB)	$315.00	$0.00
0	1115541	HYDRAULIC OIL LEVEL LIGHTWITH CHIME	$400.00	$0.00
		----------HOPPER----------		
0	1104503	LIFELINER HOPPER SYSTEM W/WARRANTY	$4,715.00	$0.00
0	1101951	STAINLESS STEEL HOPPER	$9,420.00	$0.00
		--------LIGHTS----------		
0	1103553	SINGLE REAR/SINGLE HOPPER BEACON; LED WITH GUARD	$2,020.00	$0.00
0	1103533	DUAL REAR/SINGLE HOPPER BEACON; LED WITH GUARD	$2,760.00	$0.00
0	1103536	DUAL REAR/SINGLE HOPPER BEACON; LED WITH GUARD & ARROWSTICK	$4,255.00	$0.00
0	1102735	LED STOP/TAIL/TURN LIGHTS	$370.00	$0.00
0	1102759	REAR MOUNTED ARROWSTICK	$1,785.00	$0.00
0	1102736	(2) REAR LOW MOUNTED OVAL AMBER LED FLASHERS	$480.00	$0.00
0	1103898	(2) REAR HIGH MOUNTED OVAL AMBER LED FLASHERS	$595.00	$0.00
0	1104618	SINGLE REAR/SINGLE HOPPER MOUNT AND GUARD - W/O BEACON	$1,650.00	$0.00
0	1104619	DUAL REAR/SINGLE HOPPER MOUNT AND GUARD - W/O BEACON	$2,045.00	$0.00
0	1104481	ARROWBOARD - REAR	$2,120.00	$0.00
0	1114836	(3) LED WORK LIGHTS (1 EACH SIDE BROOM, 1 ON MAINBROOM)	$520.00	$0.00
0	1114837	(4) LED WORK LIGHTS (1 EACH SIDE BROOM, 2 ON MAINBROOM)	$840.00	$0.00

MODEL: BROOM BEAR ALT. FUEL
EFFECTIVE DATE: 01/01/2019
SUPERCEDES ALL PREVIOUS PRICE LISTS
DEALER PRICE LIST (U.S. DOLLARS)

QUANTITY	PART NUMBER	MODEL DESCRIPTION	2019 LIST PRICE	2019 EXTENDED
		-----ADDITIONAL MANUALS----		
0	0701683	CNG BROOM BEAR OPERATORS MANUAL	$55.00	$0.00
0	0702463	CNG BROOM BEAR SERVICE MANUAL	$95.00	$0.00
0	0702243	CNG BROOM BEAR PARTS BOOK	$95.00	$0.00
		---------PAINT----------		
1	4810001	PAINT SWEEPER STANDARD WHITE	$0.00	$0.00
0	4811003	PAINT SWEEPER YELLOW RAL 1003	$525.00	$0.00
0	4811007	PAINT SWEEPER YELLOW RAL 1007	$525.00	$0.00
0	4811018	PAINT SWEEPER YELLOW RAL 1018	$525.00	$0.00
0	4811023	PAINT SWEEPER YELLOW RAL 1023	$525.00	$0.00
0	4811037	PAINT SWEEPER YELLOW RAL 1037	$525.00	$0.00
0	4812008	PAINT SWEEPER ORANGE RAL 2008	$525.00	$0.00
0	4812009	PAINT SWEEPER ORANGE RAL 2009	$525.00	$0.00
0	4816018	PAINT SWEEPER GREEN RAL 6018	$525.00	$0.00
0	SPECIAL	PAINT SWEEPER OTHER RAL THAN ABOVE	$1,265.00	$0.00
0	SPECIAL	PAINT SWEEPER OTHER THAN ABOVE	$3,830.00	$0.00
0	1069927	ANTI GRAFFITI COATING	$3,860.00	$0.00
		-------PM10 OPTIONS-------		
0	1115481	PM10 COMPLIANT (RULE 1186)	$3,210.00	$0.00
		---------SAFETY----------		
0	1104991	REMOVE REAR CAMERA	$0.00	$0.00
0	1095548	LEFT HAND SIDE CAMERA	$610.00	$0.00
0	9306848	TRIANGLE REFLECTIVE FLARES (3)	$90.00	$0.00
		------SWEEPER OPTIONS------		
0	1116593	LEFT HAND SIDEBROOM TILT	$995.00	$0.00
0	1116592	RIGHT HAND SIDEBROOM TILT	$995.00	$0.00
0	1117071	LEFT HAND SIDEBROOM TILT W/INDICATOR	$1,060.00	$0.00
0	1117070	RIGHT HAND SIDEBROOM TILT W/INDICATOR	$1,060.00	$0.00
0	1101385	RUBBER MOUNTED CARBIDE DRAG SHOES TWO-ROW (ILO STD)	$810.00	$0.00
0	1116253	IN-CAB VARIABLE SPEED AND REVERSING BROOM CONTROL	$2,095.00	$0.00
0	1114619	RUBBER BELT CONVEYOR (REVERSING BELT) (ILO STD)	$0.00	$0.00
0	1104990	VARIABLE SPEED CONVEYOR	$1,940.00	$0.00
0	1106049	HEAVY DUTY LOWER ROLLER	$1,050.00	$0.00
0	1120535	CONVEYOR ONLY ROTATE FOR WASHDOWN	$490.00	$0.00
		-----TOOLS/TOOLBOXES------		
0	1053426	TOOL KIT	$775.00	$0.00
0	1057687	TOOL BOX W/TOOLS	$750.00	$0.00
0	1036150	HYDRANT WRENCH	$100.00	$0.00
		--------WATER SYSTEM------		
0	1032484	25' WATER FILL HOSE (ILO 16' 8")	$205.00	$0.00
0	1108830	AIR PURGE FOR WATER SYSTEM	$400.00	$0.00
0	1118800	WATER SIDEBROOM FUNCTION CONTROL (ILO MANUAL)	$515.00	$0.00
0	1121615	WATER SIDEBROOM FUNCTION CONTROL (ILO MANUAL) (USE WITH EXTENDED SIDEBROOM REACH	$455.00	$0.00

MODEL: BROOM BEAR ALT. FUEL
EFFECTIVE DATE: 01/01/2019
SUPERCEDES ALL PREVIOUS PRICE LISTS
DEALER PRICE LIST (U.S. DOLLARS)

QUANTITY	PART NUMBER	MODEL DESCRIPTION	2019 LIST PRICE	2019 EXTENDED
		---M2 CHASSIS OPTIONS-----		
0	SPECIAL	FUEL CAP SAFETY LOCK	$230.00	$0.00
0	1075400	AM/FM/CD RADIO	$935.00	$0.00
0	1080756	FENDER MOUNTED MIRROR-LEFT HAND	$575.00	$0.00
0	1109607	12" CONVEX MIRRORS (IL0 STD 8")	$335.00	$0.00
0	SPECIAL	SPARE CHASSIS KEY	$50.00	$0.00
0	1081365	IN CAB AIR FILTER RESTRICTION INDICATOR	$875.00	$0.00
0	1081747	(2) AIR CLOTH HI-BACK SEATS	$2,105.00	$0.00
0	1081748	(1) AIR CLOTH HI-BACK SEAT	$1,090.00	$0.00
0	1120505	SPARE TIRE & WHEEL, BALANCED	$1,390.00	$0.00
0	SPECIAL	SINGLE ARM REST - VINYL	$380.00	$0.00
0	SPECIAL	DUAL ARM REST - VINYL	$715.00	$0.00
0	SPECIAL	SINGLE ARM REST - CLOTH	$380.00	$0.00
0	SPECIAL	DUAL ARM REST - CLOTH	$715.00	$0.00
0	SPECIAL	DAYTIME RUNNING LIGHTS	$1,110.00	$0.00
0	SPECIAL	DUAL AIR HORNS	$1,640.00	$0.00
0	1101560	MIDWEST AUTOLUBE - SWEEPER/TRUCK	$7,365.00	$0.00
0	1101567	2 1/2 LB. FIRE EXTINGUISHER	$225.00	$0.00
0	1101568	5 LB. FIRE EXTINGUISHER	$255.00	$0.00
0	1103560	FRONT SPRAY BAR	$765.00	$0.00
0	4820001	CAB STANDARD WHITE	$0.00	$0.00
0	1063734	M2 (IN STOCK) CAB SPECIAL COLOR	$3,955.00	$0.00
0	1108053	FULL WIDTH FRONT SPRAY BAR	$765.00	$0.00
		-----FREIGHT RATES-----		
0	FRT-119-001	SELF SHIPPING DOCK CHARGE	$595.00	$0.00
0	FRT-119-002	FREIGHT-IL,WI,IA,IN,MI,MN,KY	$1,310.00	$0.00
0	FRT-119-003	FREIGHT-TN,WV,PA,NY	$2,850.00	$0.00
0	FRT-119-004	FREIGHT-NH,VT,ME	$3,595.00	$0.00
0	FRT-119-005	FREIGHT-NEW YORK CITY	$4,110.00	$0.00
0	FRT-119-006	FREIGHT-ND,SD,NE,OK,KS,AR,AL,MO	$2,715.00	$0.00
0	FRT-119-007	FREIGHT-AZ,UT	$5,445.00	$0.00
0	FRT-119-008	FREIGHT-CA,NV,ID,OR,WA	$6,355.00	$0.00
0	FRT-119-009	FREIGHT-CHICAGO/MILWAUKEE	$900.00	$0.00
0	FRT-119-010	FREIGHT - FL,LA,TX,NM,CO,WY,MT	$4,145.00	$0.00
0	FRT-119-011	FREIGHT- OH,ST.LOUIS METRO	$1,530.00	$0.00
0	FRT-119-012	FREIGHT- MS,GA,SC,NC,VA,MD	$3,130.00	$0.00
0	FRT-119-013	FREIGHT - RI,DE,CT,NJ,MA	$2,740.00	$0.00
0	FRT-119-014	FREIGHT - LAREDO, TX	$6,700.00	$0.00
0	FRT-119-015	SPECIALIZED TRANSPORT EQUIPMENT	$1,030.00	$0.00
		---------WARRANTY---------		
0	EW-ME-NA-2PL	BROOM BEAR 2ND YEAR PARTS/LABOR	$2,860.00	$0.00
0	EW-ME-NA-3PL	BROOM BEAR 3RD YEAR PARTS/LABOR	$5,405.00	$0.00
0	EW-ME-NA-4PL	BROOM BEAR 4TH YEAR PART/LABOR	$7,650.00	$0.00
0	EW-ME-NA-5PL	BROOM BEAR 5TH YEAR PARTS/LABOR	$9,820.00	$0.00
			SUB TOTAL	**$0.00**
		-----DISCOUNTS-----		
0	DISC-119-ADDL	ADDITIONAL DISCOUNT	0	$0.00
0	DISC-119-PROMO	PROMO DISCOUNT	0	$0.00
		SPECIAL RFQ OPTIONS OR OTHER DESCRIPTIONS		
			GRAND TOTAL	**$0.00**

MODEL: BROOM BEAR
EFFECTIVE DATE: 01/01/2019
SUPERCEDES ALL PREVIOUS PRICE LISTS
DEALER PRICE LIST (U.S. DOLLARS)

Purchase Order #	
Order Date:	
Delivery Date Requirment If Any:	

Ship To Address:
State Penalty Clause If Applicable:

QUANTITY	PART NUMBER	MODEL DESCRIPTION	2019 LIST PRICE	2019 EXTENDED
0	1113136	**BROOM BEAR DUAL**	$155,625	$0.00
0		Conveyor squeege, variable height, right side dumping, **4.5 cu. yd. hopper**, with dual, hydraulically driven, trailing arm sidebrooms, sweeper is powder coated from powder coatings chart 2003/N with powder coated gray undercarriage and including the standard features listed below.		
0	1126378	**BROOM BEAR DUAL-M2**	$157,125	$0.00
0		Conveyor squeege, variable height, right side dumping, **5.4 cu. yd. hopper**, with dual, hydraulically driven, trailing arm sidebrooms, sweeper is powder coated from powder coatings chart 2003/N with powder coated gray undercarriage and including the standard features listed below.		
0	1125527	**BROOM BEAR DUAL-AUTOCAR**	$155,625	$0.00
0		Conveyor squeege, variable height, right side dumping, **4.5 cu. yd. hopper**, with dual, hydraulically driven, trailing arm sidebrooms, sweeper is powder coated from powder coatings chart 2003/N with powder coated gray undercarriage and including the standard features listed below.		
0	1125961	**BROOM BEAR DUAL-AUTOCAR**	$157,125	$0.00
0		Conveyor squeege, variable height, right side dumping, **5.4 cu. yd. hopper**, with dual, hydraulically driven, trailing arm sidebrooms, sweeper is powder coated from powder coatings chart 2003/N with powder coated gray undercarriage and including the standard features listed below.		
		CHASSIS		
0	1122061	FL M2 (2013 EMISSIONS) W/HEATED MIRRORS (LIMITED QTY) (USE WITH 4.5YD HOPPER)	CONTACT INSIDE SALES	$0.00
0	1126675	FL M2 (2013 EMISSIONS) W/HEATED MIRRORS (LIMITED QTY) (USE WITH 5.4 YD HOPPER)	CONTACT INSIDE SALES	$0.00
0	1125473	IH 4400 (2015 EMISSIONS) W/HEATED MIRRORS (LIMITED QTY) (USE WITH 4.5YD HOPPER)	CONTACT INSIDE SALES	$0.00
0	1126098	AUTOCAR CHASSIS	CONTACT INSIDE SALES	$0.00
		CHASSIS MOUNTING CHARGE		
0	1122083	M2 - CHASSIS ALTERATIONS (USE WITH 4.5 HOPPER)	$2,625	$0.00
0	1123197	M2 - CHASSIS ALTERATIONS (USE WITH 5.4 HOPPER)	$2,625	$0.00
0	1125473	IH - CHASSIS ALTERATIONS	$2,625	$0.00
0	1126099	AUTO CAR - CHASSIS ALTERATIONS	$2,625	$0.00
0	SPECIAL	CUSTOMER SUPPLIED CHASSIS ALTERATIONS	CONTACT INSIDE SALES	$0.00
0	CSC-HANDLING	CUSTOMER SUPPLIED HANDLING CHARGE	$2,845	$0.00

NOTE: Customer Supplied Cassis Requires Both The Chassis Alterations and the Handling Charge

NOTE: A BODY includes the cost of Elgin standard white finish paint. It does not however, include the price of the chassis.

NOTE: The chassis being supplied by a customer or dealer **must** comply completely with all Elgin requirements or the chas

NOTE: For cost of sweeper mounted on any other chassis, consult factory.

NOTE: One year warranty on all Elgin supplied parts and labor. Consult your Elgin dealer for full warranty details.

STANDARD FEATURES

1	0701681	BROOM BEAR OPERATORS MANUAL	STANDARD	$0.00
1	0702241	BROOM BEAR PARTS BOOK	STANDARD	$0.00
1	0730166	BROOM MEASUREMENT RULER	STANDARD	$0.00
1	1032481	16' 8" WATER FILL HOSE	STANDARD	$0.00
1	0701707	MACHINE DELIVERY PACKET	STANDARD	$0.00
1	0702020	ELGIN SAFETY MANUAL	STANDARD	$0.00

Broom side, 46 "steel vertical digger 4 or 5 segment
Broom side, air floating suspension with adjustable pin stops, air deploy
Broom, main, 34" diameter, 60" wide prefab disposable
Camera, Rear with in-cab monitor
Conveyor chain, hardened with polyurethane sprockets
Conveyor, 11 flight squeegee with rubber edging
Conveyor, lift independent from main broom
Conveyor, three piece replaceable wear plates
Conveyor flush out system
Conveyor raise in reverse
Conveyor stall alarm
Dirt shoes, heavy duty single row carbide steel (rubber isolated)
Electric backup alarm
Hopper inspection door
Hopper, 4.5 cu yd with window and skylight
Hopper up indicator and beep
Hopper, variable high dump, 9'6", 4.5 yard
Hose, hydrant fill, 16'8" (5080 mm) with strainer and coupling
Hydraulic oil level gauge w/ external thermometer and in-cab level light
Hydraulic system, load sensing with selectable transmission driven PTO pump
Lights, automatic backup
Lights, combination tail/stop, separate amber signal
Lights, flood light, one per broom (3)
Manuals, operator and parts
Mechanical mainbroom suspension
Rear broom cover and anti-carryover wrap
Rear broom spray bar
Rear right hand flood light
Reflectors, set of 6
Sidebroom speed control, external to cab
Sweep resume / raise in reverse
Tactile controls for all sweep functions
Tool storage
Water fill, anti-siphon
Water level indicator in-cab
Water Pump, electric diaphragm
Water tank, molded polyethylene,
360 gallon total nominal capacity

MODEL: BROOM BEAR
EFFECTIVE DATE: 01/01/2019
SUPERCEDES ALL PREVIOUS PRICE LISTS
DEALER PRICE LIST (U.S. DOLLARS)

QUANTITY	PART NUMBER	MODEL DESCRIPTION	2019 LIST PRICE	2019 EXTENDED
		-----ALARMS/INDICATORS----		
0	SPECIAL	ECCO SA940 SMART ALARM (ILO of STD)	$285.00	$0.00
0	1101528	LATCHING ELEVATOR REVERSE AND ALARM	$410.00	$0.00
0	1104970	HOPPER UP CONSTANT ALARM	$375.00	$0.00
0	1104705	HOPPER FULL INDICATOR	$815.00	$0.00
		-------AUTO LUBE----------		
0	1101559	MIDWEST AUTO LUBE - SWEEPER ONLY	$5,160.00	$0.00
		-----ADDITIONAL MANUALS----		
0	0701681	BROOM BEAR OPERATORS MANUAL	$55.00	$0.00
0	0702461	BROOM BEAR SERVICE MANUAL	$95.00	$0.00
0	0702241	BROOM BEAR PARTS BOOK	$95.00	$0.00
		----------BROOMS---------		
0	1035616	DOUBLE WRAP MAINBROOM	$470.00	$0.00
0	1035617	POLY/WIRE WAFER MAINBROOM	$550.00	$0.00
0	1058156	STRIP MAINBROOM (MILWAUKEE)	$665.00	$0.00
0	1058158	STRIP MAINBROOM (URB)	$460.00	$0.00
0	1077151	URB STRIP MAINBROOM W/CENTER SWEEP MANDREL	$460.00	$0.00
0	1095046	ALUMINUM SIDEBROOM SEGMENTS - BLUE STEEL	$340.00	$0.00
0	1096691	DEDUCT MAIN BROOM & CORE	-$278.40	$0.00
0	1115524	HYDRAULIC FLOAT MAINBROOM SUSPENSION	$0.00	$0.00
0	1116748	HYDRAULIC SIDEBROOM WITH HYDRAULIC MAINBROOM SUSPENSION **(MUST SELECT HYDRAULIC MAINBROOM SUSPENSION OPTION)**	$0.00	$0.00
0	1115679	IN CAB HYDRAULIC FLOAT SIDEBROOMS **(NOT COMPATIBLE WITH HYDRAULIC MAINBROOM SUSPENSION)**	$0.00	$0.00
		----------DECALS---------		
1	1102781	RED DECALS - BROOM BEAR	$0.00	$0.00
0	1102782	WHITE DECALS - BROOM BEAR	$0.00	$0.00
0	1101037	SLOW MOVING VEHICLE SIGN	$165.00	$0.00
0	1122929	SHIP DECALS AND SWOOSH LOOSE IN HOPPER	$0.00	$0.00
		--------GAUGES----------		
0	1101379	BROOM HOUR METERS	$395.00	$0.00
0	1111656	HYDRAULIC OIL TEMP DISPLAY (IN CAB)	$315.00	$0.00
0	SPECIAL	HYDRAULIC OIL HIGH TEMPERTURE, LOW LEVEL PTO OFF WITH DISPLAY	$540.00	$0.00
		----------HOPPER----------		
0	1104503	LIFELINER HOPPER SYSTEM W/WARRANTY	$4,715.00	$0.00
0	1101951	STAINLESS STEEL HOPPER	$9,420.00	$0.00
0	1115491	EXTENDED HOPPER DOOR	$1,025.00	$0.00
		--------LIGHTS----------		
0	1103553	PACKAGE 1 : SINGLE REAR/SINGLE HOPPER BEACON; LED WITH GUARD	$2,020.00	$0.00
0	1103533	PACKAGE 2 : DUAL REAR/SINGLE HOPPER BEACON; LED WITH GUARD	$2,760.00	$0.00
0	1125926	PACKAGE 3 : DUAL REAR/SINGLE HOPPER BEACON; LED WITH GUARD & LED ARROWSTICK	$4,320.00	$0.00
0	1104618	PACKAGE 4 : SINGLE REAR/SINGLE HOPPER MOUNT AND GUARD - W/O BEACONS	$1,650.00	$0.00
0	1104619	PACKAGE 5 : DUAL REAR/SINGLE HOPPER MOUNT AND GUARD - W/O BEACONS	$2,045.00	$0.00
0	1102735	LED STOP/TAIL/TURN/REAR ID/CLEARANCE LIGHTS	$370.00	$0.00
0	1125927	REAR MOUNTED LED ARROWSTICK	$1,785.00	$0.00
0	1102736	(2) REAR LOW MOUNTED OVAL AMBER LED FLASHERS	$480.00	$0.00
0	1103898	(2) REAR HIGH MOUNTED OVAL AMBER LED FLASHERS	$595.00	$0.00
0	1114836	(3) LED WORK LIGHTS (1 EACH SIDE BROOM, 1 ON MAINBROOM)	$520.00	$0.00
0	1114837	(4) LED WORK LIGHTS (1 EACH SIDE BROOM, 2 ON MAINBROOM)	$840.00	$0.00
0	1104481	ARROWBOARD - REAR	$2,120.00	$0.00

EFFECTIVE DATE: 01/01/2019
SUPERCEDES ALL PREVIOUS PRICE LISTS
DEALER PRICE LIST (U.S. DOLLARS)

QUANTITY	PART NUMBER	MODEL DESCRIPTION	2019 LIST PRICE	2019 EXTENDED
		---------PAINT----------		
1	4810001	PAINT SWEEPER STANDARD WHITE	$0.00	$0.00
0	4811003	PAINT SWEEPER YELLOW RAL 1003	$525.00	$0.00
0	4811007	PAINT SWEEPER YELLOW RAL 1007	$525.00	$0.00
0	4811018	PAINT SWEEPER YELLOW RAL 1018	$525.00	$0.00
0	4811023	PAINT SWEEPER YELLOW RAL 1023	$525.00	$0.00
0	4811037	PAINT SWEEPER YELLOW RAL 1037	$525.00	$0.00
0	4812008	PAINT SWEEPER ORANGE RAL 2008	$525.00	$0.00
0	4812009	PAINT SWEEPER ORANGE RAL 2009	$525.00	$0.00
0	4816018	PAINT SWEEPER GREEN RAL 6018	$525.00	$0.00
0	SPECIAL	PAINT SWEEPER OTHER RAL THAN ABOVE	$1,285.00	$0.00
0	SPECIAL	PAINT SWEEPER OTHER THAN ABOVE	$3,890.00	$0.00
		-------PM10 OPTIONS-------		
0	1115481	PM10 COMPLIANT (RULE 1186)	$3,210.00	$0.00
		---------SAFETY----------		
0	1104991	REMOVE REAR CAMERA	$0.00	$0.00
0	1095548	LEFT HAND SIDE CAMERA	$610.00	$0.00
0	9306848	TRIANGLE REFLECTIVE FLARES (3)	$90.00	$0.00
		------SWEEPER OPTIONS-----		
0	1100660	LEFT HAND SIDEBROOM TILT	$995.00	$0.00
0	1100656	RIGHT HAND SIDEBROOM TILT	$995.00	$0.00
0	1117071	LEFT HAND SIDEBROOM TILT W/INDICATOR	$1,060.00	$0.00
0	1117070	RIGHT HAND SIDEBROOM TILT W/INDICATOR	$1,060.00	$0.00
0	1101385	RUBBER MOUNTED CARBIDE DRAG SHOES TWO-ROW (ILO STD)	$810.00	$0.00
0	1102732	RUBBER DRAG-SHOES (ILO STD)	$130.00	$0.00
0	1104238	BORON DRAG-SHOES (ILO STD)	$140.00	$0.00
0	1104997	IN-CAB VARIABLE SPEED AND REVERSING BROOM CONTROL **(ONLY COMPATIBLE WITH PM-10 OPTION)**	$2,095.00	$0.00
0	1104990	VARIABLE SPEED CONVEYOR	$1,940.00	$0.00
0	1122873	VARIABLE SPEED CONVEYOR & IN CAB VARIABLE SPEED & REVERSE CONTROL SIDEBROOMS	$4,030.00	$0.00
0	1106049	HEAVY DUTY LOWER ROLLER	$1,050.00	$0.00
0	1114619	RUBBER BELT CONVEYOR (ILO STANDARD SQUEEGEE)	$0.00	$0.00
0	1120535	CONVEYOR ONLY ROTATE FOR WASHDOWN	$490.00	$0.00
		-----TOOLS/TOOLBOXES------		
0	1053426	TOOL KIT	$775.00	$0.00
0	1057687	TOOL BOX W/TOOLS	$750.00	$0.00
		--------WATER SYSTEM------		
0	1032484	25' WATER FILL HOSE (ILO 16' 8")	$205.00	$0.00
0	1108830	AIR PURGE FOR WATER SYSTEM	$400.00	$0.00
0	1113859	WATER SIDEBROOM FUNCTION CONTROL (ILO MANUAL) **(USE WITHOUT EXTENDED SIDEBROOM REACH)**	$515.00	$0.00
0	1121603	WATER SIDEBROOM FUNCTION CONTROL (ILO MANUAL) **(USE WITH EXTENEDED SIDEBROOM REACH)**	$820.00	$0.00

EFFECTIVE DATE: 01/01/2019
SUPERCEDES ALL PREVIOUS PRICE LISTS
DEALER PRICE LIST (U.S. DOLLARS)

QUANTITY	PART NUMBER	MODEL DESCRIPTION	2019 LIST PRICE	2019 EXTENDED
		---M2 CHASSIS OPTIONS-----		
0	1071235	FUEL CAP SAFETY LOCK	$230.00	$0.00
0	1075400	AM/FM/CD RADIO	$935.00	$0.00
0	1080756	FENDER MOUNTED MIRROR-LEFT HAND	$575.00	$0.00
0	1109607	12" CONVEX MIRRORS (IL0 STD 8")	$335.00	$0.00
0	1081188	SPARE CHASSIS KEY	$50.00	$0.00
0	1081365	IN CAB AIR FILTER RESTRICTION INDICATOR	$875.00	$0.00
0	1081747	(2) AIR CLOTH HI-BACK	$2,105.00	$0.00
0	1081748	(1) AIR CLOTH HI-BACK SEAT	$1,090.00	$0.00
0	1120505	SPARE TIRE & WHEEL, BALANCED	$1,390.00	$0.00
0	1081909	SINGLE ARM REST - VINYL	$380.00	$0.00
0	1081910	DUAL ARM REST - VINYL	$715.00	$0.00
0	1081911	SINGLE ARM REST - CLOTH	$380.00	$0.00
0	1081912	DUAL ARM REST - CLOTH	$715.00	$0.00
0	1081956	DAYTIME RUNNING LIGHTS	$1,110.00	$0.00
0	1090653	DUAL AIR HORNS	$1,640.00	$0.00
0	1101560	MIDWEST AUTOLUBE - SWEEPER/TRUCK	$7,365.00	$0.00
0	1101567	2 1/2 LB. FIRE EXTINGUISHER	$225.00	$0.00
0	1101568	5 LB. FIRE EXTINGUISHER	$255.00	$0.00
0	1108053	FULL WIDTH FRONT SPRAY BAR	$765.00	$0.00
0	1072443	MASTER BATTERY SWITCH	$550.00	$0.00
0	4820001	CAB STANDARD WHITE	$0.00	$0.00
0	1063734	M2 (IN STOCK) CAB SPECIAL COLOR	$3,955.00	$0.00
0	1115658	(2) FRONT CAMERAS (1) REAR CAMERA	$1,005.00	$0.00
0	1120361	EXTENDED REACH RIGHT HAND SIDEBROOM (**MUST SELECT IN CAB HYDRAULIC FLOAT SIDEBROOMS**)	$1,410.00	$0.00
0	1120782	EXTENDED REACH RIGHT AND LEFT HAND SIDEBROOMS (**MUST SELECT IN CAB HYDRAULIC FLOAT SIDEBROOMS)**	$1,980.00	$0.00
		-----NAVISTAR CHASSIS OPTIONS-----		
0	4820001	CAB STANDARD WHITE	$0.00	$0.00
0	1063731	NAV CAB PAINTED SPECIAL COLOR	$3,805.00	$0.00
0	1108053	FULL WIDTH FRONT SPRAY BAR	$765.00	$0.00
0	1086733	LEFT HAND FENDER MOUNTED MIRROR	$530.00	$0.00
0	1101567	2 1/2 LB. FIRE EXTINGUISHER	$225.00	$0.00
0	1101568	5 LB. FIRE EXTINGUISHER	$255.00	$0.00
0	1091761	EXTRA KEY	$65.00	$0.00
0	1091770	(2) ELECTRIC & (1) AIR HORN	$1,960.00	$0.00
0	1091822	AM/FM/CD RADIO	$935.00	$0.00
0	1097641	NATIONAL AIR RIDE SEAT - PASSENGER SIDE - VINYL	$2,435.00	$0.00
0	1097642	NATIONAL AIR RIDE SEAT-PASSENGER SIDE- VINYL W/ARM REST	$2,600.00	$0.00
0	1097643	NATIONAL AIR RIDE SEAT-PASSENGER SIDE - CLOTH	$2,305.00	$0.00
0	1097644	NATIONAL AIR RIDE SEAT-PASSENGER SIDE - CLOTH W/ARM REST	$2,450.00	$0.00
0	1097645	NATIONAL AIR RIDE SEAT - DRIVER SIDE - VINYL	$2,165.00	$0.00
0	1097646	NATIONAL AIR RIDE SEAT - DRIVER SIDE - VINYL W/ARM REST	$2,305.00	$0.00
0	1097647	NATIONAL AIR RIDE SEAT - DRIVER SIDE - CLOTH	$2,305.00	$0.00
0	1097648	NATIONAL AIR RIDE SEAT - DRIVER SIDE - CLOTH W/ARM REST	$2,645.00	$0.00
0	1099317	(1) ELECTRIC HORN	$435.00	$0.00
0	1120361	EXTENDED REACH RIGHT HAND SIDEBROOM (**MUST SELECT IN CAB HYDRAULIC FLOAT SIDEBROOMS**)	$1,410.00	$0.00
0	1120782	EXTENDED REACH RIGHT AND LEFT HAND SIDEBROOMS (**MUST SELECT IN CAB HYDRAULIC FLOAT SIDEBROOMS)**	$1,980.00	$0.00

MODEL: BROOM BEAR
EFFECTIVE DATE: 01/01/2019
SUPERCEDES ALL PREVIOUS PRICE LISTS
DEALER PRICE LIST (U.S. DOLLARS)

QUANTITY	PART NUMBER	MODEL DESCRIPTION	2019 LIST PRICE	2019 EXTENDED
		-----FREIGHT RATES-----		
0	FRT-118-001	SELF SHIPPING DOCK CHARGE	$595.00	$0.00
0	FRT-118-002	FREIGHT-IL,WI,IA,IN,MI,MN,KY	$1,310.00	$0.00
0	FRT-118-003	FREIGHT-TN,WV,PA,NY	$2,850.00	$0.00

0	FRT-118-004	FREIGHT-NH,VT,ME	$3,595.00	$0.00
0	FRT-118-005	FREIGHT-NEW YORK CITY	$4,110.00	$0.00
0	FRT-118-006	FREIGHT-ND,SD,NE,OK,KS,AR,AL,MO	$2,715.00	$0.00
0	FRT-118-007	FREIGHT-AZ,UT	$5,445.00	$0.00
0	FRT-118-008	FREIGHT-CA,NV,ID,OR,WA	$6,355.00	$0.00
0	FRT-118-009	FREIGHT-CHICAGO/MILWAUKEE	$900.00	$0.00
0	FRT-118-010	FREIGHT - FL,LA,TX,NM,CO,WY,MT	$4,145.00	$0.00
0	FRT-118-011	FREIGHT- OH,ST.LOUIS METRO	$1,530.00	$0.00
0	FRT-118-012	FREIGHT- MS,GA,SC,NC,VA,MD	$3,130.00	$0.00
0	FRT-118-013	FREIGHT - RI,DE,CT,NJ,MA	$2,740.00	$0.00
0	FRT-118-014	FREIGHT - LAREDO, TX	$6,700.00	$0.00
0	FRT-118-015	SPECIALIZED TRANSPORT EQUIPMENT	$1,030.00	$0.00

---------WARRANTY---------

0	EW-ME-NA-2PL	BROOM BEAR 2ND YEAR PARTS/LABOR	$2,860.00	$0.00
0	EW-ME-NA-3PL	BROOM BEAR 3RD YEAR PARTS/LABOR	$5,405.00	$0.00
0	EW-ME-NA-4PL	BROOM BEAR 4TH YEAR PARTS/LABOR	$7,650.00	$0.00
0	EW-ME-NA-5PL	BROOM BEAR 5TH YEAR PARTS/LABOR	$9,820.00	$0.00

SUB TOTAL	**$0.00**

-----DISCOUNTS-----

0	DISC-118-ADDL	ADDITIONAL DISCOUNT	0	$0.00
0	DISC-118-PROMO	PROMO DISCOUNT	0	$0.00

SPECIAL RFQ OPTIONS OR OTHER DESCRIPTIONS

GRAND TOTAL	**$0.00**

MODEL: CROSSWIND TIER III
CNG ALTERNATIVE FUEL
EFFECTIVE DATE: 01/01/2019
SUPERCEDES ALL PREVIOUS PRICE LISTS
DEALER PRICE LIST (U.S. DOLLARS)

Purchase Order #	**Ship To Address:**
Order Date:	
Delivery Date Requirment If Any:	**State Penalty Clause If Applicable:**

QUANTITY	PART NUMBER	MODEL DESCRIPTION	2019 LIST PRICE	2019 EXTENDED
0	1099090	**CROSSWIND DUAL SIDEBROOMS IH & AUTOCAR CHASSIS**	$150,125	$0.00
		2010 spark ignited emissions, GM 5.7L, 115 HP natural gas engine, 8.0 cu. Yd. Hopper, right and left side brooms, sweeper is powder coated from powder coatings chart 2003/N with powder coated gray undercarriage.		
0	1121110	**CROSSWIND DUAL SIDEBROOMS M2 CHASSIS**	$150,125	$0.00
		2010 spark ignited emissions, GM 5.7L, 115 HP natural gas engine, 8.0 cu. Yd. Hopper, right and left side brooms, sweeper is powder coated from powder coatings chart 2003/N with powder coated gray undercarriage.		
		CHASSIS		
0	SPECIAL	DUAL STEER M2 112 CNG W/ 60 DGE TANKS, W/METHANE DETECTION SYSTEM	CONTACT INSIDE SALES	$0.00

DGE = Diesel Gallon Equivalent

CHASSIS MOUNTING CHARGES

0	1115150	M2 DUAL STEER - ALTERNATIVE FUEL	$2,625	$0.00
0	SPECIAL	CUSTOMER SUPPLIED CHASSIS ALTERATIONS	CONTACT INSIDE SALES	$0.00
0	CSC-HANDLING	CUSTOMER SUPPLIED HANDLING CHARGE	$2,845	$0.00

NOTE: Customer Supplied Chassis requires both the Chassis Alterations and the Handling Charge

1	4820001	PAINT CAB STANDARD WHITE	N/C	$0.00
1	4810001	PAINT SWEEPER STANDARD WHITE	N/C	$0.00

NOTE: A BODY includes the cost of Elgin standard white finish paint. It does not however, include the price of the chassis.

NOTE: The chassis being supplied by a customer or dealer **must** comply completely with all Elgin requirements or the chassis will be modified at dealer's expense.

NOTE: For cost of sweeper mounted on any other chassis, consult factory.

NOTE: One year warranty on all Elgin supplied parts and labor. Consult your Elgin dealer for full warranty details.

*****FOR A SKID MOUNT UNIT, PLEASE CONSULT FACTORY FOR FUTHER DETAILS*****

MODEL: CROSSWIND TIER III
CNG ALTERNATIVE FUEL
EFFECTIVE DATE: 01/01/2019
SUPERCEDES ALL PREVIOUS PRICE LISTS
DEALER PRICE LIST (U.S. DOLLARS)

QUANTITY	PART NUMBER	MODEL DESCRIPTION	2019 LIST PRICE	2019 EXTENDED
1		**STANDARD FEATURES**		
1	0701425	CROSSWIND OPERATORS MANUAL	STANDARD	$0.00
1	0702216	CROSSWIND PARTS BOOK	STANDARD	$0.00
1	0700979	CROSSWIND PARTS BOOK - CNG	STANDARD	$0.00
1	0701421	CROSSWIND OPERATORS MANUAL - CNG	STANDARD	$0.00
1	0730166	BROOM MEASUREMENT RULER	STANDARD	$0.00
1	1032481	16' 8" WATER FILL HOSE	STANDARD	$0.00
1	0701707	MACHINE DELIVERY PACKET	STANDARD	$0.00
1	0702020	ELGIN SAFETY MANUAL	STANDARD	$0.00

Alternator, 95 amp
Auto Shutdown, Aux. Engine
Backup Alarm, electric
Blower, 20,000 CFM rating with linatex lined housing
Brooms, hydraulic rotation
Brooms, Dual with side broom lights for night operation
Camera, rear mounted
Console, w/rocker switches for all sweep functions, including memory sweep with full gauge package including tachometer, engine hour meter, oil pressure indicator, coolant temperature, voltmeter and fuel lever indicator, water level gauge and warning lights for hopper "up", hopper rear door "open" and hopper "full", with auxiliary engine, RPM control, side broom down pressure controls and manual reset circuit breakers
Doors, access fiberglass doors provide easy service and maintenance on auxiliary engine, hydraulic and electrical system
Electronic Throttle, sweep resume/sweep transport/reverse pick-up
Fuel Water Separator on Aux Engine
Hopper rear door, hydraulically opened/closed and locked/unlocked with external controls.
Hose, hydrant fill, 16'8" (5080 mm) with coupling
In-Cab Hopper Dump
LED Clearance Lights
Lights, rear clearance and rear identification
Manuals, operator and parts
Mirrors, West Coast type with 8" convex inserts, one each side
Pick-up head, hydraulically operated, 14" (355 mm) outside diameter pressure hose, 12-3/4" (324mm) inside diameter (11" on FSX) suction hose with quick disconnect on suctions side
Spray nozzles, sixteen (16), seven (7) in the pick-up head, three (3) in the suction nozzle, three (3) at each side broom
Side Broom Outer Position Stop
Trans Oil Cooler
Vacuum enhancer, in-cab operated
Water tank, molded polyethylene, 240 gallons (907L)
Water pre-filter, hydrant fill hose

MODEL: CROSSWIND TIER III
CNG ALTERNATIVE FUEL
EFFECTIVE DATE: 01/01/2019
SUPERCEDES ALL PREVIOUS PRICE LISTS
DEALER PRICE LIST (U.S. DOLLARS)

QUANTITY	PART NUMBER	MODEL DESCRIPTION	2019 LIST PRICE	2019 EXTENDED
		--------ALARMS----------		
0	1048703	BACKUP ALARM, SMART	$440.00	$0.00
		-----AUTO LUBE-----		
0	1068972	AUTO LUBE SWEEPER ONLY	$4,445.00	$0.00
		------DECALS------		
0	1090150	RED LOGO/CROSSWIND	$0.00	$0.00
0	1122929	SHIP DECALS AND SWOOSH LOOSE IN HOPPER	$0.00	$0.00
		------HOPPER OPTIONS------		
0	1085864	RIGHT HAND INSPECTION DOOR	$455.00	$0.00
0	1085882	LEFT HAND INSPECTION DOOR	$455.00	$0.00
0	1085883	RIGHT HAND INSPECTION DOOR & STEP	$810.00	$0.00
0	1085884	LEFT HAND INSPECTION DOOR & STEP	$810.00	$0.00
0	1101937	STAINLESS STEEL RIGHT HAND INSPECTION DOOR & STEP	$830.00	$0.00
0	1101938	STAINLESS STEEL LEFT HAND INSPECTION DOOR & STEP	$830.00	$0.00
0	1085887	6" HOPPER DRAIN	$845.00	$0.00
0	1110030	AUXILIARY HYDRAULIC PUMP	$1,415.00	$0.00
		----SS HOPPER LINERS------		
0	1089326	6" HOPPER DRAIN, STAINLESS STEEL DOOR	$1,800.00	$0.00
0	1089443	LINED HOPPER (USE W/NO INSPECTION DOOR, NO DRAIN)	$7,370.00	$0.00
0	1089445	LINED HOPPER (USE W/RH INSPECTION DOOR, NO DRAIN)	$7,370.00	$0.00
		-----LIFELINER HOPPER----		
0	1092227	LIFELINER HOPPER SYSTEM W/WARRANTY	$8,175.00	$0.00
		-----MANUALS----		
0	1103918	CNG MANUAL PACKAGE	$625.00	$0.00
0	0702234	CROSSWIND PARTS BOOK - CNG	$95.00	$0.00
0	0701421	CROSSWIND OPERATORS MANUAL - CNG	$55.00	$0.00
		-----LIGHTING-----		
0	1088228	ARROWBOARD	$2,120.00	$0.00
0	1088230	WIRE/MOUNT - ARROWBOARD	$2,180.00	$0.00
0	1088231	WIRE/MOUNT - LED ARROWBOARD	$3,175.00	$0.00
0	1088233	REAR BEACON / ARROWBOARD	$2,330.00	$0.00
0	1088234	REAR STROBE / ARROWBOARD	$2,305.00	$0.00
0	1088246	REAR STROBE / LED ARROWBOARD	$2,945.00	$0.00
0	1090458	(2) ALTERNATING FLASHING REAR LIGHTS	$935.00	$0.00
0	1100375	LED ID LIGHT	$125.00	$0.00
		----------PAINT----------		
0	4811018	PAINT SWEEPER ZINC YELLOW RAL 1018	$525.00	$0.00
0	4811023	PAINT SWEEPER TRAFFIC YELLOW RAL 1023	$525.00	$0.00
0	4811037	PAINT SWEEPER SUN YELLOW RAL 1037	$525.00	$0.00
0	4813020	PAINT SWEEPER TRAFFIC RED RAL 3020	$525.00	$0.00
0	SPECIAL	PAINT SWEEPER OTHER RAL THAN ABOVE	$3,970.00	$0.00
0	SPECIAL	PAINT SWEEPER NON RAL COLOR	$4,805.00	$0.00

MODEL: CROSSWIND TIER III
CNG ALTERNATIVE FUEL
EFFECTIVE DATE: 01/01/2019
SUPERCEDES ALL PREVIOUS PRICE LISTS
DEALER PRICE LIST (U.S. DOLLARS)

QUANTITY	PART NUMBER	MODEL DESCRIPTION	2019 LIST PRICE	2019 EXTENDED
		----------SAFETY---------		
0	1093019	2 1/2 LB. FIRE EXTINGUISHER	$225.00	$0.00
0	1048643	SLOW MOVING VEHICLE SIGN	$165.00	$0.00
0	1095548	LEFT HAND SIDE CAMERA NOT COMPATIBALE WITH RIGHT HAND SIDE CAMERA	$610.00	$0.00
0	1096442	RIGHT HAND SIDE CAMERA NOT COMPATIBALE WITH LEFT HAND SIDE CAMERA	$750.00	$0.00
0	1103333	(2) FRONT MOUNT CAMERAS AND (1) REAR CAMERA	$1,030.00	$0.00
0	5007219	HYDRAULIC JACK, 5 TON	$275.00	$0.00
0	9306848	TRIANGLE REFLECTOR FLARES (3)	$90.00	$0.00
		----SIDE BROOM OPTIONS----		
0	1087729	LEFT HAND SIDEBROOM TILT	$995.00	$0.00
0	1087730	RIGHT HAND SIDEBROOM TILT	$995.00	$0.00
		-----SWEEPER ENGINE-------		
0	1066340	BATTERY DISCONNECT SWITCH	$530.00	$0.00
0	6063004	ADDITIONAL IGNITION KEY	$50.00	$0.00
		-----SWEEP COMPONENTS-----		
0	SPECIAL	CENTERBROOM	$4,860.00	$0.00
0	1066939	CASTERS FOR CENTERBROOM	$4,355.00	$0.00
		-------TOOLS/TOOL BOX-----		
0	1036150	HYDRANT WRENCH	$100.00	$0.00
0	1053426	TOOL KIT	$775.00	$0.00
0	1057687	TOOL BOX W/TOOLS	$750.00	$0.00
		-----WANDERING HOSE-----		
0	1086441	HYDRAULIC WANDERING HOSE	$4,925.00	$0.00
0	1059263	4 FT. ALUMINUM WANDERING HOSE EXTENSION REAR MOUNT	$795.00	$0.00
0	1063656	(2) 4 FT. ALUMINUM WANDERING HOSE EXTENSION REAR MOUNT	$1,595.00	$0.00
0	1065243	WANDERING HOSE LIGHT DUTY SPRING	$3,525.00	$0.00
		----------PM10----------		
0	1099939	PM-10 WATER SYSTEM - CNG	$3,100.00	$0.00
0	1099940	PM-10 WATER SYSTEM - CNG (USE W/CENTERBROOM)	$6,070.00	$0.00
0	1100507	AIR PURGE SYSTEM PM-10	$410.00	$0.00
		-----WATER SYSTEM---------		
0	1032484	25' WATER FILL HOSE (ILO 16' 8")	$205.00	$0.00
0	1040094	QUICK DISCONNECT WATER FILL	$530.00	$0.00
0	1059209	HOPPER DELUGE	$1,060.00	$0.00
0	1061652	ANTI SIPHON 2-1/2" AIR GAP	$195.00	$0.00
0	1066013	SPRAY NOZZLES FOR CENTERBROOM	$575.00	$0.00
0	1070059	AIR PURGE FOR WATER SYSTEM	$400.00	$0.00
0	1071989	LOW PRESSURE WASH DOWN	$1,230.00	$0.00
		----- M2 CHASSIS OPTIONS -----		
0	1075400	AM/FM/CD RADIO	$935.00	$0.00
0	1081188	EXTRA KEY	$50.00	$0.00
0	1081746	(1) BOSTROM 905 VINYL MID-BACK	$935.00	$0.00
0	1086602	FRONT SPRAY BAR	$585.00	$0.00
0	1070639	LED / STOP / TAIL / REAR TURN LIGHT	$665.00	$0.00
0	1080756	FENDER MOUNTED MIRROR-LEFT HAND	$575.00	$0.00

MODEL: CROSSWIND TIER III
CNG ALTERNATIVE FUEL
EFFECTIVE DATE: 01/01/2019
SUPERCEDES ALL PREVIOUS PRICE LISTS
DEALER PRICE LIST (U.S. DOLLARS)

QUANTITY	PART NUMBER	MODEL DESCRIPTION	2019 LIST PRICE	2019 EXTENDED
		----------WARRANTY--------		
0	EW-AIR-NA-2PL	CROSSWIND 2ND YEAR PARTS/LABOR	$2,775.00	$0.00
0	EW-AIR-NA-3PL	CROSSWIND 3RD YEAR PARTS/LABOR	$4,220.00	$0.00
0	EW-AIR-NA-4PL	CROSSWIND 4TH YEAR PARTS/LABOR	$6,445.00	$0.00
0	EW-AIR-NA-5PL	CROSSWIND 5TH YEAR PARTS/LABOR	$8,785.00	$0.00
		FREIGHT RATES		
0	FRT-125-001	SELF SHIPPING DOCK CHARGE	$595.00	$0.00
0	FRT-125-002	FREIGHT-IL,WI,IA,IN,MI,MN,KY	$1,310.00	$0.00
0	FRT-125-003	FREIGHT-TN,WV,PA,NY	$2,850.00	$0.00
0	FRT-125-004	FREIGHT-NH,VT,ME	$3,595.00	$0.00
0	FRT-125-005	FREIGHT-NEW YORK CITY	$4,110.00	$0.00
0	FRT-125-006	FREIGHT-ND,SD,NE,OK,KS,AR,AL,MO	$2,715.00	$0.00
0	FRT-125-007	FREIGHT-AZ,UT	$5,445.00	$0.00
0	FRT-125-008	FREIGHT-CA,NV,ID,OR,WA	$6,355.00	$0.00
0	FRT-125-009	FREIGHT-CHICAGO/MILWAUKEE	$900.00	$0.00
0	FRT-125-010	FREIGHT - FL,LA,TX,NM,CO,WY,MT	$4,145.00	$0.00
0	FRT-125-011	FREIGHT- OH,ST.LOUIS METRO	$1,530.00	$0.00
0	FRT-125-012	FREIGHT- MS,GA,SC,NC,VA,MD	$3,130.00	$0.00
0	FRT-125-013	FREIGHT - RI,DE,CT,NJ,MA	$2,740.00	$0.00
0	FRT-125-014	FREIGHT - LAREDO, TX	$6,700.00	$0.00
0	FRT-125-015	SPECIALIZED TRANSPORT EQUIPMENT	$1,030.00	$0.00
			SUB TOTAL	$0.00
		-----DISCOUNTS-----		
0	DISC-125-ADDL	ADDITIONAL DISCOUNT	$0.00	$0.00
0	DISC-125-PROMO	PROMO DISCOUNT	$0.00	$0.00

SPECIAL RFQ OPTIONS / OTHER DESCRIPTIONS

GRAND TOTAL	$0.00

1 2 3 $ 4 5

MODEL: CROSSWIND SHARED POWER TIER 4F
EFFECTIVE DATE: 01/01/2019
SUPERCEDES ALL PREVIOUS PRICE LISTS
DEALER PRICE LIST (U.S. DOLLARS)

Purchase Order #	**Ship To Address:**
Order Date:	
Delivery Date Requirment If Any:	**State Penalty Clause If Applicable:**

Equipped with MEMORY SWEEP

QUANTITY	PART NUMBER	MODEL DESCRIPTION	2019 LIST PRICE	2019 EXTENDED
		ECOINFUSED TIER 4F ENGINES		
0	1118453	**CROSSWIND - DUAL TIER 4F 74HP - AUTOCAR**	$131,910	$0.00
0		**Equipped with MemorySweep®**; Tier 4F emissions, John Deere 4045, Turbocharged diesel engine, 8.0 cu. Yd. Hopper, right and left side brooms, sweeper is powder coated from powder coatings chart 2003/N with powder coated gray undercarriage and includes the standard features listed below.		
0	1120745	**CROSSWIND - DUAL TIER 4F 74HP - M2**	$131,910	$0.00
0		**Equipped with MemorySweep®**; Tier 4F emissions, John Deere 4045, Turbocharged diesel engine, 8.0 cu. Yd. Hopper, right and left side brooms, sweeper is powder coated from powder coatings chart 2003/N with powder coated gray undercarriage and includes the standard features listed below.		
0	1120890	**CROSSWIND - DUAL TIER 4F 74HP - PETERBILT**	$131,910	$0.00
0		**Equipped with MemorySweep®**; Tier 4F emissions, John Deere 4045, Turbocharged diesel engine, 8.0 cu. Yd. Hopper, right and left side brooms, sweeper is powder coated from powder coatings chart 2003/N with powder coated gray undercarriage and includes the standard features listed below.		
0	1120891	**CROSSWIND - DUAL TIER 4F 74HP - IH**	$131,910	$0.00
0		**Equipped with MemorySweep®**; Tier 4F emissions, John Deere 4045, Turbocharged diesel engine, 8.0 cu. Yd. Hopper, right and left side brooms, sweeper is powder coated from powder coatings chart 2003/N with powder coated gray undercarriage and includes the standard features listed below.		
		CHASSIS		
0	1127332	AUTOCAR XPERT 2017E (NON STOCKED CHASSIS)	CONTACT INSIDE SALES	$0.00
0	1119154	M2 DUAL STEER (2013 EMISSIONS) SHARED POWER 74HP	CONTACT INSIDE SALES	$0.00
0	1124555	PETERBILT RIGHT HAND STEER (NON STOCKED CHASSIS) SINGLE SPEED REAR AXLE	CONTACT INSIDE SALES	$0.00
0	1124556	PETERBILT DUAL STEER (NON STOCKED CHASSIS) SINGLE SPEED REAR AXLE	CONTACT INSIDE SALES	$0.00
0	1124546	IH DUAL STEER (NON STOCKED CHASSIS)	CONTACT INSIDE SALES	$0.00
		CHASSIS MOUNTING CHARGE		
0	1122038	M2 CHASSIS - CHASSIS ALTERATIONS	$2,625	$0.00
0	SPECIAL	AUTOCAR XPERT 164" WB - CHASSIS ALTERATIONS	$2,625	$0.00
0	SPECIAL	PETERBILT CHASSIS - CHASSIS ALTERATIONS	$2,625	$0.00
0	SPECIAL	IH CHASSIS - CHASSIS ALTERATIONS	$2,625	$0.00
0	SPECIAL	CUSTOMER SUPPLIED CHASSIS ALTERATIONS	CONTACT INSIDE SALES	$0.00
0	SPECIAL	CUSTOMER SUPPLIED HANDLING CHARGE	$2,845	$0.00
		NOTE: Customer Supplied Chassis requires both the Chassis Alterations and the Handling Charge		
		APPLICATION - SPECIFIC PACKAGES		
0	SPECIAL	**CROSSWIND DUAL FSX PACKAGE**	CONTACT INSIDE SALES	$0.00
0		Equipped with FSX pickup head ILO the standard Crosswind pickup head, 11" diameter suction hose and polypropylene side broom segments.		
0	SPECIAL	**CROSSWIND DUAL GRS PACKAGE**	$11,640	$0.00
0		Equipped with hydraulic pump off system and fan Flow Blocker to aid in fast unloading of glycol.		
1	4820001	PAINT CAB STANDARD WHITE	N/C	$0.00
1	4810001	PAINT SWEEPER STANDARD WHITE	N/C	$0.00

NOTE: A BODY includes the cost of Elgin standard white finish paint. It does not however, include the price of the chas

NOTE: The chassis being supplied by a customer or dealer **must** comply completely with all Elgin requirements or the

NOTE: For cost of sweeper mounted on any other chassis, consult factory.

NOTE: One year warranty on all Elgin supplied parts and labor. Consult your Elgin dealer for full warranty details.

MODEL: CROSSWIND SHARED POWER TIER 4F
EFFECTIVE DATE: 01/01/2019
SUPERCEDES ALL PREVIOUS PRICE LISTS
DEALER PRICE LIST (U.S. DOLLARS)

QUANTITY	PART NUMBER	MODEL DESCRIPTION	2019 LIST PRICE	2019 EXTENDED

STANDARD FEATURES

1	0702253	CROSSWIND SHARED POWER 74HP PARTS MANUAL	STANDARD	$0.00
1	0701674	CROSSWIND SHARED POWER 74HP OPERATORS MANUAL	STANDARD	$0.00
1	0704046	JOHN DEERE OPERATORS	STANDARD	$0.00
1	0704047	JOHN DEERE PARTS	STANDARD	$0.00
1	0730166	BROOM MEASUREMENT RULER	STANDARD	$0.00
1	1032481	16' 8" WATER FILL HOSE	STANDARD	$0.00
1	0701705	MACHINE DELIVERY PACKET	STANDARD	$0.00
1	0702020	ELGIN SAFETY MANUAL	STANDARD	$0.00

Patented Shared Power System
Alternator, 95 amp
Auto Shutdown, Aux. Engine
Backup Alarm, electric
Blower, HARDOX®500 steel with linatex lined housing
Brooms, hydraulic rotation
Brooms, Dual
Camera, rear mounted
Console, w/rocker switches for all sweep functions, with full gauge package including tachometer, engine hour meter, oil pressure indicator, coolant temperature, voltmeter and fuel lever indicator, water level gauge and warning lights for hopper "up", hopper rear door "open" and hopper "full", with auxiliary engine, RPM control, side broom down pressure controls and automotive style blade fuses
Doors, access fiberglass doors provide easy service and maintenance on auxiliary engine, hydraulic and electrical system
Electronic Actuated Throttle, sweep resume/sweep transport/reverse pick-up
Fuel Water Separator on Aux Engine
Hopper rear door, hydraulically opened/closed and locked/unlocked with external manual controls
Hose, hydrant fill, 16'8" (5080 mm) with coupling
LED Clearance Lights
Lights; rear clearance and rear identification
Manuals, operator and parts
Mirrors, West Coast type with 8" convex inserts, one each side
Pick-up head, hydraulically operated, 14" (355 mm) outside diameter pressure hose, 12-3/4" (324mm) inside diameter suction hose with quick disconnect on suctions side
Water system; one (1) rocker switch with HI / LOW setting, with manual valves for water control
Spray nozzles, sixteen (16), seven (7) in the pick-up head, three (3) in the suction nozzle, three (3) at each side broom
Side Broom Outer Position Stop
Trans Oil Cooler
Vacuum enhancer, external manually operated
Water tank, molded polyethylene, 240 gallons (907L)
Water pre-filter, hydrant fill hose

		MEMORY SWEEP® HAS BEEN SELECTED		
1	1120875	***MEMORY SWEEP®	$2,755.00	$2,755.00
		ELGIN SWEEPER EXCLUSIVE SWEEP RESUME FEATURE; Provides in-cab feedback for operator awareness of sidebroom tilt angle, vacuum enchancer percent open/close and one switch sweep resume of sweep functions. Elgin's optional Memory Sweep ® system allows the operator to resume all previous sweep settings, even broom tilt (if so equipped), with one touch control. This feature enhances productivity and reduces fatigue. Memory Sweep incorporates a multi-screen display that indicates system diagnostics as well as optional features such as broom tilt angle, vacuum enhancer position, and broom hours.		

MODEL: CROSSWIND SHARED POWER TIER 4F
EFFECTIVE DATE: 01/01/2019
SUPERCEDES ALL PREVIOUS PRICE LISTS
DEALER PRICE LIST (U.S. DOLLARS)

QUANTITY	PART NUMBER	MODEL DESCRIPTION	2019 LIST PRICE	2019 EXTENDED
STEP	# 2	SELECT PRODUCT ENHANCEMENTS		
		--------SWEEPER COMPONENTS---------		
0	1114911	***BROOM HOURS **WITH IN-CAB DISPLAY**	$110.00	$0.00
0	1119215	***VACUUM ENHANCER IN-CAB CONTROL **WITH IN-CAB DISPLAY**	$505.00	$0.00
		----------SIDE BROOMS OPTIONS----------		
0	1111176	RIGHT HAND GUTTER BROOM TILT **WITH IN-CAB DISPLAY**	$1,060.00	$0.00
0	1111175	LEFT HAND GUTTER BROOM TILT **WITH IN-CAB DISPLAY**	$1,060.00	$0.00
0	1113732	VARIABLE SPEED - DUAL SIDEBROOMS	$3,440.00	$0.00
		ALL WORK & FLOOD LIGHTS ARE EACH CONTROLLED USING INDIVIDUAL ROCKER S		
		NOTE: Sidebroom Lights are NOT STANDARD		
0	SPECIAL	***INDVDUAL SWITCHES FOR DUAL SIDEBROOM LIGHTS	640.00	$0.00
0	SPECIAL	INDIVIDUAL SWITCHES FOR DUAL REAR FLOOD LIGHTS	665.00	$0.00
0	SPECIAL	INDIVIDUAL SWITCHES FOR DUAL SIDEBROOM & REAR FLOOD LIGHTS	1295.00	$0.00
0	1120822	INDVIDUAL SWITCHES FOR DUAL SIDEBROOM LIGHTS-LED	$785.00	$0.00
0	1120823	INDVIDUAL SWITCHES FOR RIGHT HAND SIDEBROOM LIGHT-LED	$720.00	$0.00
0	1120824	INDIVIDUAL SWITCHES FOR DUAL REAR FLOOD LIGHTS-LED	$900.00	$0.00
0	1120825	INDIVIDUAL SWITCHES FOR DUAL SIDEBROOM & REAR FLOOD LTS-LED	$1,675.00	$0.00
		-----WATER SYSTEM (CHOOSE UP TO ONE)-----		
0	1110823	FUNCTIONAL CONTROL OF WATER SYSTEM	$765.00	$0.00
		FUNCTIONAL CONTROL OF WATER SYSTEM dispenses water with the use of the sweeper function rocker switch. Not compatible with Individual control water system. Not compatibale with PM-10 water system.		
		OR		
0	1113730	***INDIVIDUAL SWITCHES FOR WATER SYSTEM CONTROL **(NOT COMPATIBLE WITH PM10)**	$1,405.00	$0.00
		----------SIDE BROOMS----------		
0	1112947	***DUAL SIDE BROOM SCRUBBING POSITION	$1,710.00	$0.00
		SIDE BROOM SCRUBBING POSITION provides additional switch on console to allow the side brooms to sweep inboard in front of the pickup head in the scrubbing position.		
		------HOPPER OPTIONS------		
0	1119059	***IN-CAB HOPPER DUMP	$860.00	$0.00

MODEL: CROSSWIND SHARED POWER TIER 4F
EFFECTIVE DATE: 01/01/2019
SUPERCEDES ALL PREVIOUS PRICE LISTS
DEALER PRICE LIST (U.S. DOLLARS)

QUANTITY	PART NUMBER	MODEL DESCRIPTION	2019 LIST PRICE	2019 EXTENDED
STEP	# 3	SELECT OPTIONS / ACCESSORIES		
		--------ALARMS----------		
0	SPECIAL	BACKUP ALARM, SMART	$445.00	$0.00
		-----AUTO LUBE-----		
0	1120877	AUTO LUBE SWEEPER ONLY	$4,445.00	$0.00
		----------BROOMS----------		
0	1078904	DUAL POLY BROOMS	$230.00	$0.00
		------DECALS------		
1	1090150	RED LOGO/CROSSWIND	$0.00	$0.00
0	1090153	WHITE LOGO/CROSSWIND	$0.00	$0.00
0	1122929	SHIP DECALS AND SWOOSH LOOSE IN HOPPER	$0.00	$0.00
		----------GAUGES----------		
0	1061886	HYDRAULIC OIL LEVEL GUAGE W/THERMOMETER	$195.00	$0.00
		------HOPPER OPTIONS------		
0	1085864	RIGHT HAND INSPECTION DOOR	$455.00	$0.00
0	1085882	LEFT HAND INSPECTION DOOR	$455.00	$0.00
0	1117147	STAINLESS STEEL RIGHT HAND INSPECTION DOOR	$480.00	$0.00
0	1117148	STAINLESS STEEL LEFT HAND INSPECTION DOOR	$480.00	$0.00
0	1127045	RIGHT HAND INSPECTION DOOR & STEP	$810.00	$0.00
0	1127046	LEFT HAND INSPECTION DOOR & STEP	$810.00	$0.00
0	1085887	6" HOPPER DRAIN	$845.00	$0.00
0	1071234	STAINLESS STEEL HOPPER SCREENS	$1,605.00	$0.00
0	1127047	STAINLESS STEEL RIGHT HAND INSPECTION DOOR & STEP	$830.00	$0.00
0	1127048	STAINLESS STEEL LEFT HAND INSPECTION DOOR & STEP	$830.00	$0.00
0	1119271	STAINLESS STEEL HOPPER DOOR WITH HOPPER DELUGE	$1,060.00	$0.00
		-----LIFELINER HOPPER----		
0	1092227	LIFELINER HOPPER SYSTEM W/WARRANTY	$8,175.00	$0.00
0	1122472	STAINLESS STEEL- HOPPER W/WARRANTY	$17,295.00	$0.00
0	1122416	STAINLESS STEEL- HOPPER W/W" HOPPER DRAIN /WARRANTY	$18,570.00	$0.00
		-----MANUALS----		
0	0702253	CROSSWIND SHARED POWER 74HP PARTS MANUAL	$95.00	$0.00
0	0701674	CROSSWIND SHARED POWER 74HP OPERATORS MANUAL	$55.00	$0.00
0	0702485	CROSSWIND SHARED POWER 74HP SERVICE MANUAL	$95.00	$0.00
0	0704046	JOHN DEERE OPERATORS	$55.00	$0.00
0	0704047	JOHN DEERE PARTS	$100.00	$0.00
0	0704048	JOHN DEERE SERVICE	$190.00	$0.00
		-----LIGHTING-----		
0	1121132	WIRE/MOUNT REAR	$430.00	$0.00
0	1121133	WIRE/MOUNT REAR W/GUARD	$665.00	$0.00
0	SPECIAL	WIRE/MOUNT REAR BEACON W/GUARD	665.00	$0.00
0	SPECIAL	WIRE/MOUNT REAR STROBE W/GUARD	755.00	$0.00
0	1121098	(2) REAR LED BEACONS **(USE W/WANDERING HOSE)**	$1,490.00	$0.00
0	1121099	(2) REAR LED BEACONS **(USE W/O WANDERING HOSE)**	$1,490.00	$0.00
0	SPECIAL	REAR LED ARROWBOARD	2765.00	$0.00
0	SPECIAL	REAR BEACON / ARROWBOARD	2355.00	$0.00
0	SPECIAL	REAR STROBE / ARROWBOARD	2335.00	$0.00
0	1121121	REAR LED BEACON / LED ARROWBOARD	$3,055.00	$0.00
0	SPECIAL	REAR STROBE / LED ARROWBOARD	$2,985.00	$0.00
0	1117011	(2) REAR BUMPER MOUNTED STROBES **(MUST SELECT ONE "INDVDUAL SWITCHES WORK LIGHT OPTION")**	$1,145.00	$0.00
0	SPECIAL	(2) ALTERNATING FLASHING REAR LIGHTS **(MUST SELECT ONE "INDVDUAL SWITCHES WORK LIGHT OPTION")**	$945.00	$0.00
0	1121096	REAR LED BEACON / LED ARROWSTICK	$2,920.00	$0.00
0	SPECIAL	REAR STROBE / LED ARROWSTICK	2660.00	$0.00
0	SPECIAL	LED ARROWSTICK	2295.00	$0.00
0	1121066	(2) REAR LED BEACONS / LED ARROWSTICK **(USE W/WANDERING HOSE)**	$3,860.00	$0.00
0	1121067	(2) REAR LED BEACONS / LED ARROWSTICK **(USE W/O WANDERING HOSE)**	$3,860.00	$0.00
0	SPECIAL	(2) REAR STROBES / LED ARROWSTICK **(USE W/WANDERING HOSE)**	3325.00	$0.00
0	SPECIAL	(2) REAR STROBES / LED ARROWSTICK **(USE W/O WANDERING HOSE)**	3325.00	$0.00
0	1120887	REAR LED BEACON	$965.00	$0.00

MODEL: CROSSWIND SHARED POWER TIER 4F
EFFECTIVE DATE: 01/01/2019
SUPERCEDES ALL PREVIOUS PRICE LISTS
DEALER PRICE LIST (U.S. DOLLARS)

QUANTITY	PART NUMBER	MODEL DESCRIPTION	2019 LIST PRICE	2019 EXTENDED
		----------PAINT----------		
0	4811018	PAINT SWEEPER YELLOW RAL 1018	$525.00	$0.00
0	4811023	PAINT SWEEPER YELLOW RAL 1023	$525.00	$0.00
0	4811037	PAINT SWEEPER YELLOW RAL 1037	$525.00	$0.00
0	4813020	PAINT SWEEPER TRAFFIC RED RAL 3020	$525.00	$0.00
0	SPECIAL	PAINT SWEEPER OTHER RAL THAN ABOVE	1285.00	$0.00
0	SPECIAL	PAINT SWEEPER NON RAL COLOR	3890.00	$0.00
		----------PM10 COMPLIANCE----------		
0	1120896	PM-10 WATER SYSTEM **(NOT COMPATIBLE WITH FUNCTIONAL OR INDIVIDUAL WATER SYSTEM)**	$3,100.00	$0.00
0	1124212	PM-10 WATER SYSTEM USE WITH SS HOPPER **(NOT COMPATIBLE WITH FUNCTIONAL OR INDIVIDUAL WATER SYSTEM)**	$3,100.00	$0.00
0	1119000	PM-10 WATER SYSTEM USE WITH CENTERBROOM **(NOT COMPATIBLE WITH FUNCTIONAL OR INDIVIDUAL WATER SYSTEM)**	$3,100.00	$0.00
0	1124211	PM-10 WATER SYSTEM USE WITH CENTERBROOM AND SS HOPPER **(NOT COMPATIBLE WITH FUNCTIONAL OR INDIVIDUAL WATER SYSTEM)**	$3,100.00	$0.00
		----------SAFETY---------		
0	1048643	SLOW MOVING VEHICLE SIGN	$165.00	$0.00
0	5007219	HYDRAULIC JACK, 5 TON	$275.00	$0.00
0	9306848	TRIANGLE REFLECTOR FLARES (3)	$90.00	$0.00
0	1095548	LEFT HAND SIDE CAMERA	$610.00	$0.00
		-----SWEEP COMPONENTS-----		
0	SPECIAL	AIR SUPPLY HOSE	$450.00	$0.00
0	1119160	CENTERBROOM	$4,965.00	$0.00
0	1126244	FLOW BLOCKER	$2,410.00	$0.00
		-----SWEEPER ENGINE-------		
0	SPECIAL	BATTERY DISCONNECT SWITCH	$550.00	$0.00
0	1120793	TURBO II PRECLEANER	$510.00	$0.00
0	SPECIAL	AUX ENGINE PRE-CLEANER	635.00	$0.00
0	SPECIAL	1000 WATT BLOCK HEATER	470.00	$0.00
0	6063004	ADDITIONAL IGNITION KEY	$50.00	$0.00
0	1121514	AUXILIARY HYDRAULIC PUMP **USE WITHOUT** IN-CAB HOPPER DUMP [SHARED POWER]	$1,385.00	$0.00
0	1121515	AUXILIARY HYDRAULIC PUMP USE **WITH** IN-CAB HOPPER DUMP [SHARED POWER]	$1,385.00	$0.00
		-------TOOLS/TOOL BOX-----		
0	1036150	HYDRANT WRENCH	$100.00	$0.00
0	1053426	TOOL KIT	$775.00	$0.00
0	1057687	TOOL BOX W/TOOLS	$750.00	$0.00
		-----WANDERING HOSE-----		
0	1119217	HYDRAULIC WANDERING HOSE	$4,925.00	$0.00
0	1120863	HYDRAULIC WANDERING HOSE **(USE W/VARIABLE SPEED)**	$4,925.00	$0.00
0	1059263	4 FT. ALUMINUM WANDERING HOSE EXTENSION - REAR MOUNT	$795.00	$0.00
0	1063656	(2) 4 FT. ALUMINUM WANDERING HOSE EXTENSION REAR MOUNT	$1,595.00	$0.00
		-----WATER SYSTEM---------		
0	1032484	25' WATER FILL HOSE (ILO 16' 8")	$205.00	$0.00
0	1040094	QUICK DISCONNECT WATER FILL	$530.00	$0.00
0	1059209	HOPPER DELUGE	$1,060.00	$0.00
0	1088582	HOPPER WATER NOZZLES	$590.00	$0.00
0	1061652	ANTI SIPHON 2-1/2" AIR GAP **(NOT COMPATIALBE W/EXTRA WATER TANKS)**	$195.00	$0.00
0	SPECIAL	SPRAY NOZZLES FOR CENTERBROOM	$550.00	$0.00
0	1070059	AIR PURGE FOR WATER SYSTEM	$400.00	$0.00
0	1120809	LOW PRESSURE WASH DOWN **(NOT COMPATIBLE WITH PM 10)**	$1,230.00	$0.00
0	1122044	HIGH PRESSURE WASHDOWN **(USE W/CENTERBROOM)**	$4,240.00	$0.00
0	1122043	HIGH PRESSURE WASHDOWN	$4,240.00	$0.00
0	1100507	AIR PURGE FOR WATER SYSTEM **(USE W/PM10)**	$410.00	$0.00
		------WIRE MOUNT----------		
0	SPECIAL	WIRE/MOUNT REAR	$420.00	$0.00
0	1121740	WIRE/MOUNT RIGHT & LEFT REAR **(USE W/WANDERING HOSE)**	$990.00	$0.00
0	1121741	WIRE/MOUNT R&L REAR **(USE W/OUT WANDERING HOSE)**	$990.00	$0.00
0	SPECIAL	WIRE MOUNT R&L REAR BEACON **(USE W/WANDERING HOSE)**	1275.00	$0.00
0	SPECIAL	WIRE MOUNT R&L REAR BEACON **(USE W/OUT WANDERING HOSE)**	1105.00	$0.00

QUANTITY	PART NUMBER	MODEL DESCRIPTION	2019 LIST PRICE	2019 EXTENDED
		---- INTERNATIONAL CHASSIS OPTIONS----		
0	1117228	2 1/2 LB. FIRE EXTINGUISHER	$225.00	$0.00
0	1091822	RADIO AM/FM/CD	$935.00	$0.00
0	1117229	5 LB. FIRE EXTINGUISHER	$250.00	$0.00
0	1070639	LED / STOP / TAIL / REAR TURN LIGHT	$665.00	$0.00
0	1111698	FRONT SPRAY BAR	$585.00	$0.00
0	1111756	FRONT SPRAY BAR (USE W/PM10)	$585.00	$0.00
0	1121177	CAB / (2) REAR LED BEACON (USE W/WANDERING HOSE	$2,710.00	$0.00
0	1121178	CAB / (2) REAR LED BEACON (USE W/ OUT WANDERING HOSE	$2,710.00	$0.00
0	1121891	WIRE/MOUNT CAB / REAR WITH LED ARROWBOARD	$2,810.00	$0.00
0	1121892	CAB / REAR LED BEACON WITH LED ARROWBOARD	$4,010.00	$0.00
0	1121896	CAB / REAR WIRE/MOUNT	$990.00	$0.00
0	1121897	CAB / REAR LED BEACON	$1,945.00	$0.00
		----- M2 CHASSIS OPTIONS -----		
0	1063734	CAB PAINT	$3,955.00	$0.00
0	1070639	LED/STOP/TAIL/REAR TURN LIGHT	$665.00	$0.00
0	1071626	PAINT TRUCK RIMS	$1,225.00	$0.00
0	1075400	AM/FM/CD RADIO	$935.00	$0.00
0	1080756	LEFT HAND FENDER MOUNTED MIRROR	$575.00	$0.00
0	1109607	12" CONVEX MIRRORS	$335.00	$0.00
0	1081188	EXTRA KEY	$50.00	$0.00
0	1081745	(2) BOSTROM 905 VINYL MID-BACK	$1,905.00	$0.00
0	1081746	(1) BOSTROM 905 VINYL MID-BACK	$935.00	$0.00
0	1081747	(2) BOSTROM AIR 905 CLOTH HI-BACK	$2,105.00	$0.00
0	1081748	BOSTROM AIR 905 CLOTH HI-BACK	$1,090.00	$0.00
0	1081901	SPARE TIRE & WHEEL , BALANCED	$1,305.00	$0.00
0	1081909	SINGLE ARM REST - VINYL **(ONLY W/AIR RIDE SEATS)**	$380.00	$0.00
0	1081910	DUAL ARM REST - VINYL **(ONLY W/AIR RIDE SEATS)**	$715.00	$0.00
0	1081911	SINGLE ARM REST - CLOTH **(ONLY W/AIR RIDE SEATS)**	$380.00	$0.00
0	1081912	DUAL ARM REST - CLOTH **(ONLY W/AIR RIDE SEATS)**	$715.00	$0.00
0	1082931	AIR RESTRICTOR GUAGE	$1,015.00	$0.00
0	SPECIAL	WIRE/MOUNT CAB / REAR	1060.00	$0.00
0	SPECIAL	WIRE/MOUNT CAB / REAR BEACON	1585.00	$0.00
0	SPECIAL	STROBES CAB / REAR W/WIRE MOUNT	1895.00	$0.00
0	1111698	FRONT SPRAY BAR **(NOT COMPATIBLE WITH THE STANDARD WATER SYSTEM)**	$585.00	$0.00
0	1111756	FRONT SPRAY BAR **(USE W/PM-10)** **(NOT COMPATIBLE WITH THE STANDARD WATER SYSTEM)**	$585.00	$0.00
0	1090653	DUAL AIR HORN	$1,640.00	$0.00
0	1118356	2 1/2 LB. FIRE EXTINGUISHER	$225.00	$0.00
0	1118357	5 LB. FIRE EXTINGUUISHER	$240.00	$0.00
0	SPECIAL	AUTO LUBE TRUCK/SWEEPER	$7,610.00	$0.00
0	1121736	CAB & (2) REAR LED BEACONS **(USE W/ WANDERING HOSE)**	$2,115.00	$0.00
0	1121737	CAB & (2) REAR LED BEACONS **(USE W/ WANDERING HOSE & AIR HORN)**	$2,115.00	$0.00
0	1121738	CAB & (2) REAR LED BEACONS **(USE W/O WANDERING HOSE)**	$2,115.00	$0.00
0	1121739	CAB & (2) REAR LED BEACONS **(USE W/O WANDERING HOSE & W/O AIR HORN)**	$2,115.00	$0.00
0	1121151	CAB / REAR LED STROBE / LED ARROWSTICK	$3,735.00	$0.00
0	1121152	CAB / REAR WIRE/MOUNT/ LED ARROWSTICK	$3,560.00	$0.00
0	1121162	WIRE/MOUNT CAB & REAR	$990.00	$0.00
0	1121163	WIRE/MOUNT CAB & REAR W/GUARD	$1,470.00	$0.00
0	1121164	LED BEACON CAB & REAR	$2,410.00	$0.00
0	SPECIAL	STROBE CAB & REAR WITH ARROWBOARD	2985.00	$0.00
0	SPECIAL	LED STROBE CAB/REAR	2230.00	$0.00
0	1121901	WIRE/MOUNT CAB / REAR W/LED ARROWBOARD	$2,810.00	$0.00
0	1121902	WIRE/MOUNT CAB / REAR W/ LED ARROWBOARD **(USE W/AIR HORN)**	$2,810.00	$0.00
0	1121903	CAB / REAR LED BEACON W/LED ARROWBOARD	$4,010.00	$0.00
0	1121904	CAB / REAR LED BEACON W/LED ARROWBOARD **(USE W/AIR HORN)**	$4,010.00	$0.00
		----PETERBILT CHASSIS OPTIONS----		
0	1119463	FRONT SPRAY BAR **(NOT COMPATIBLE WITH THE STANDARD WATER SYSTEM)**	$585.00	$0.00
0	1119464	FRONT SPRAY BAR **(USE W/PM-10)** **(NOT COMPATIBLE WITH THE STANDARD WATER SYSTEM)**	$585.00	$0.00
0	1120883	17" WORK PLATFORM **(NOT COMPATIABLE W/EXTRA WATER TANK)**	$3,370.00	$0.00
0	1120869	CAB & (2) REAR STROBES **(USE W/ WANDERING HOSE)**	$2,425.00	$0.00
0	1120870	CAB & (2) REAR STROBES **(USE W/O WANDERING HOSE)**	$2,425.00	$0.00
0	1121577	EXTRA KEY	$140.00	$0.00
0	1122155	LED STOP, TAIL, TURN LIGHTS	$665.00	$0.00
0	1123158	2 1/2 LB. FIRE EXTINGUISHER	$225.00	$0.00
0	1123159	5 LB. FIRE EXTINGUUISHER	$255.00	$0.00

QUANTITY	PART NUMBER	MODEL DESCRIPTION	2019 LIST PRICE	2019 EXTENDED
		----AUTOCAR XPERT CHASSIS OPTIONS----		
0	1111468	LED/STOP/TURN/TAIL LIGHTS	$665.00	$0.00
0	SPECIAL	BATTERY DISCONNECT	$1,365.00	$0.00
0	SPECIAL	DUAL UNDERCAB AIR HORN	$1,360.00	$0.00
0	SPECIAL	AUTO AIR DRAIN VALVE	$855.00	$0.00
0	1107238	ISRI HT914 HIGH BACK, AIR RIDE, RIGHT HAND	$2,180.00	$0.00
0	1107239	ISRI HT914 HIGH BACK, AIR RIDE, LEFT HAND	$2,180.00	$0.00
0	SPECIAL	IN CAB AIR FILTER RESTRICTION INDICATOR	$575.00	$0.00
0	SPECIAL	DAYTIME RUNNING LIGHTS	$155.00	$0.00
0	1121194	CAB / (2) REAR LED BEACON / ARROWSTICK **(USE W/ANDERING HOSE)**	$3,975.00	$0.00
0	1121195	CAB / (2) REAR LED BEACON / ARROWSTICK **(USE W/O WANDERING HOSE)**	$3,975.00	$0.00
0	1121172	CAB / (2) REAR LED BEACON **(USE W/ANDERING HOSE)**	$2,710.00	$0.00
0	1121173	CAB / (2) REAR LED BEACON **(USE W/O WANDERING HOSE)**	$2,710.00	$0.00
0	1121894	CAB / REAR LED BEACON / ARROWSTICK	$3,550.00	$0.00
0	SPECIAL	WIRE / MOUNT - CAB/FRONT ; HOPPER/REAR	$1,000.00	$0.00
0	SPECIAL	WIRE / MOUNT - CAB/FRONT ; HOPPER/REAR WITH GUARD	$1,440.00	$0.00
0	SPECIAL	BEACONS CAB/FRONT ; HOPPER/REAR	$1,585.00	$0.00
0	SPECIAL	STROBES CAB/FRONT ; HOPPER/REAR	$1,350.00	$0.00
0	SPECIAL	LED STROBE CAB/FRONT ; HOPPER/REAR	$2,145.00	$0.00
0	1111697	FRONT SPRAY BAR (**NOT COMPATIBLE WITH THE STANDARD WATER SYSTEM)**	$585.00	$0.00
0	1111742	FRONT SPRAY BAR **(USE W/PM-10) (NOT COMPATIBLE WITH THE STANDARD WATER SYSTEM)**	$585.00	$0.00
0	SPECIAL	BEACON CAB/FRONT ; (2) HOPPER/REAR BEACONS WITH LED ARROWSTICK **(USE W/ANDERING HOSE**)	$3,675.00	$0.00
0	SPECIAL	BEACON CAB/FRONT ; (2) HOPPER/REAR BEACONS WITH LED ARROWSTICK **(USE W/O WANDERING HOSE)**	$3,675.00	$0.00
0	SPECIAL	STROBE CAB/FRONT ; (2) HOPPER/REAR STROBES LED WITH ARROWSTICK **(USE W/WANDERING HOSE)**	$4,730.00	$0.00
0	SPECIAL	STROBE CAB/FRONT ; (2) HOPPER/REAR STROBES WITH LED ARROWSTICK **(USE W/O WANDERING HOSE)**	$4,730.00	$0.00
0	SPECIAL	AUTO LUBE TRUCK/SWEEPER	$7,610.00	$0.00
0	1108945	AM/FM RADIO WITH CD	$935.00	$0.00
0	SPECIAL	EXTRA KEY	$125.00	$0.00
0	1120374	2 1/2 LB. FIRE EXTINGUISHER	$225.00	$0.00
0	1120375	5 LB. FIRE EXTINGUUISHER	$255.00	$0.00
0	SPECIAL	PAINT OUTSIDE CAB	$6,325.00	$0.00
0	SPECIAL	PAINT WHEEL RIMS	$1,210.00	$0.00
0	SPECIAL	RAIN CAP EXHAUST	$410.00	$0.00
0	SPECIAL	SPARE TIRE/WHEEL	$1,380.00	$0.00
0	1112945	MAGNET W/TOOL BOX	$12,075.00	$0.00
0	1112946	MAGNET W/O TOOL BOX	$10,785.00	$0.00
0	1107537	17" WORK PLATFORM **(NOT COMPATIABLE W/EXTRA WATER TANK)**	$3,370.00	$0.00
0	SPECIAL	(1) EXTRA 140 GALLON WATER TANK (TOP FILL) **(NOT COMPATIABLE W/WORK PLATFORM)**	$6,755.00	$0.00
0	SPECIAL	(1) EXTRA 140 GALLON WATER TANK (BOTTOM FILL) **(NOT COMPATIABLE W/WORK PLATFORM)**	$6,755.00	$0.00
0	SPECIAL	(1) EXTRA 360 GALLON WATER TANK **(NOT COMPATIABLE W/WORK PLATFORM)**	$8,145.00	$0.00
0	1121206	WIRE/MOUNT CAB & REAR	$990.00	$0.00
0	1121207	WIRE/MOUNT CAB & REAR W/GUARD	$1,470.00	$0.00
0	1121208	LED STROBE CAB & REAR	$2,410.00	$0.00
0	1121210	WIRE/MOUNT CAB & REAR WITH LED ARROWBOARD	$3,560.00	$0.00
0	1121211	LED STROBE CAB/REAR WITH ARROWBOARD	$3,735.00	$0.00
0	SPECIAL	BEACON CAB & REAR WITH LED ARROWBOARD	$3,940.00	$0.00
0	SPECIAL	STROBE CAB & REAR WITH LED ARROWBOARD	$4,310.00	$0.00
0	SPECIAL	LED STROBE CAB/REAR WITH LED ARROWBOARD	$4,970.00	$0.00

QUANTITY	PART NUMBER	MODEL DESCRIPTION	2019 LIST PRICE	2019 EXTENDED
		----------WARRANTY--------		
0	EW-AIR-NA-2PL	CROSSWIND 2ND YEAR PARTS/LABOR	$2,775.00	$0.00
0	EW-AIR-NA-3PL	CROSSWIND 3RD YEAR PARTS/LABOR	$4,220.00	$0.00
0	EW-AIR-NA-4PL	CROSSWIND 4TH YEAR PARTS/LABOR	$6,445.00	$0.00
0	EW-AIR-NA-5PL	CROSSWIND 5TH YEAR PARTS/LABOR	$8,785.00	$0.00
		FREIGHT RATES		
0	FRT-124-001	SELF SHIPPING DOCK CHARGE	$595.00	$0.00
0	FRT-124-002	FREIGHT-IL,WI,IA,IN,MI,MN,KY	$1,310.00	$0.00
0	FRT-124-003	FREIGHT-TN,WV,PA,NY	$2,850.00	$0.00
0	FRT-124-004	FREIGHT-NH,VT,ME	$3,595.00	$0.00
0	FRT-124-005	FREIGHT-NEW YORK CITY	$4,110.00	$0.00
0	FRT-124-006	FREIGHT-ND,SD,NE,OK,KS,AR,AL,MO	$2,715.00	$0.00
0	FRT-124-007	FREIGHT-AZ,UT	$5,445.00	$0.00
0	FRT-124-008	FREIGHT-CA,NV,ID,OR,WA	$6,355.00	$0.00
0	FRT-124-009	FREIGHT-CHICAGO/MILWAUKEE	$900.00	$0.00
0	FRT-124-010	FREIGHT - FL,LA,TX,NM,CO,WY,MT	$4,145.00	$0.00
0	FRT-124-011	FREIGHT- OH,ST.LOUIS METRO	$1,530.00	$0.00
0	FRT-124-012	FREIGHT- MS,GA,SC,NC,VA,MD	$3,130.00	$0.00
0	FRT-124-013	FREIGHT - RI,DE,CT,NJ,MA	$2,740.00	$0.00
0	FRT-124-014	FREIGHT - LAREDO, TX	$6,700.00	$0.00
0	FRT-124-015	SPECIALIZED TRANSPORT EQUIPMENT	$1,030.00	$0.00
			SUB TOTAL	**$2,755.00**
		-----DISCOUNTS-----		
0	DISC-124-ADDL	ADDITIONAL DISCOUNT	$0.00	$0.00
0	DISC-124-PROMO	PROMO DISCOUNT	$0.00	$0.00
		SPECIAL RFQ OPTIONS / OTHER DESCRIPTIONS		
			GRAND TOTAL	**$2,755.00**

MODEL: 4M EAGLE
EFFECTIVE DATE:01/01/2019
SUPERCEDES ALL PREVIOUS PRICE LISTS
DEALER PRICE LIST (U.S. DOLLARS)

Purchase Order #	
Order Date:	
Delivery Date Requirment If Any:	

Ship To Address:
State Penalty Clause If Applicable:

QUANTITY	PART NUMBER	MODEL DESCRIPTION	2019 LIST PRICE	2019 EXTENDED
0	1117695	**4M EAGLE - DUAL (M2)**	$177,500	$0.00
		Hydraulically driven left and right side brooms and variable height, right side dumping, 4.5 cu. yd. hopper, sweeper is powder coated from powder coatings chart 2003/N with powder coated gray undercarriage and includes the standard features listed below.		
0	1121718	**4M EAGLE - DUAL (PETERBILT)**	$177,500	$0.00
		Hydraulically driven left and right side brooms and variable height, right side dumping, 4.5 cu. yd. hopper, sweeper is powder coated from powder coatings chart 2003/N with powder coated gray undercarriage and includes the standard features listed below.		
0	1122024	**4M EAGLE - DUAL (AUTOCAR)**	$177,500	$0.00
		Hydraulically driven left and right side brooms and variable height, right side dumping, 4.5 cu. yd. hopper, sweeper is powder coated from powder coatings chart 2003/N with powder coated gray undercarriage and includes the standard features listed below.		
0	1122458	**4M EAGLE - DUAL (IH)**	$177,500	$0.00
		Hydraulically driven left and right side brooms and variable height, right side dumping, 4.5 cu. yd. hopper, sweeper is powder coated from powder coatings chart 2003/N with powder coated gray undercarriage and includes the standard features listed below.		

CHASSIS

0	1124667	AUTOCAR XPERT DUAL STEER (LIMITED)	CALL INSIDE SALES	$0.00
0	1107354	CANADIAN COMPLIANCE AND DAYTIME RUNNING LIGHTS FOR AUTOCAR CHASSIS	$765	$0.00
0	1124567	M2 DUAL STEER (2013 EMISSIONS) (LIMITED)	CALL INSIDE SALES	$0.00
0	1122276	PETERBILT RIGHT HAND STEER (NON STOCKED CHASSIS) SINGLE SPEED REAR AXLE	CALL INSIDE SALES	$0.00
0	1122277	PETERBILT DUAL STEER (NON STOCKED CHASSIS) SINGLE SPEED REAR AXLE	CALL INSIDE SALES	$0.00
0	1124539	IH DUAL STEER	CALL INSIDE SALES	$0.00

CHASSIS MOUNTING CHARGE

0	1116594	M2 - CHASSIS ALTERATIONS	$2,625	$0.00
0	1121973	AUTOCAR - CHASSIS ALTERATIONS	$2,625	$0.00
0	1122411	IH - CHASSIS ALTERATIONS	$2,625	$0.00
0	1120762	PETERBILT - CHASSIS ALTERATIONS	$2,625	$0.00
0	SPECIAL	CUSTOMER SUPPLIED CHASSIS ALTERATIONS	CONTACT INSIDE SALES	$0.00
0	CSC-HANDLING	CUSTOMER SUPPLIED HANDLING CHARGE	$2,845	$0.00

NOTE: Customer Supplied Cassis Requires Both The Chassis Alterations and the Handling Charge

1

1	4820001	PAINT CAB STANDARD WHITE	N/C	$0.00
1	4810001	PAINT SWEEPER STANDARD WHITE	N/C	$0.00

NOTE: A BODY includes the cost of Elgin standard white finish paint. It does not however, include the price of the ch

NOTE: The chassis being supplied by a customer or dealer **must** comply completely with all Elgin requirements or th

NOTE: For cost of sweeper mounted on any other chassis, consult factory.

NOTE: One year warranty on all Elgin supplied parts and labor. Consult your Elgin dealer for full warranty details.

MODEL: 4M EAGLE
EFFECTIVE DATE:01/01/2019
SUPERCEDES ALL PREVIOUS PRICE LISTS
DEALER PRICE LIST (U.S. DOLLARS)

STANDARD FEATURES

Aux-engine;
Two-stage dry type with restriction indicator (at engine) and precleaner
Broom side, in-cab reversable, 46 "steel vertical digger 5 segment
Broom side, pneumatic floating suspension, pneumatic deploy
Broom, main, 34" diameter, 60" wide prefab disposable
Camera, Rear with in-cab monitor
Conveyor, cleated belt, adjustable height
Conveyor flush out system
Conveyor raise in reverse
Conveyor stall alarm
Dirt shoes, rubber
Electric backup alarm
Engine, sweeper, diesel, tier 4 FINAL, 74 HP
Hopper inspection door
Hopper,4.5 cu yd with window and skylight
Hopper up visual/audible indicator
Hopper, variable high dump, 38" -10'
Hopper lift, dual scissors, 10,000 lbs
Hose, hydrant fill, 16'8" (5080 mm) with strainer and coupling
Hydraulic oil level gauge
and in-cab level light
Lights, automatic backup
Lights, combination tail/stop, separate amber signal
Lights, flood light, one per broom left,right,and main broom (3)
Manuals, operator and parts
Rear broom cover and anti-carryover wrap
Rear broom spray bar
Reflectors, set of 2
Sweep resume / raise in reverse
Tactile controls for all sweep functions
Tool storage
Water fill, anti-siphon
Water level indicator in-cab
Water Pump, electric diaphragm
Water tank, molded polyethylene, 360 gallon total
nominal capacity

QUANTITY	PART NUMBER	MODEL DESCRIPTION	2019 LIST PRICE	2019 EXTENDED
		--------ALARMS----------		
0	1104970	HOPPER UP CONSTANT ALARM	$375.00	$0.00
0	1101528	LATCHING ELEVATOR REVERSE AND ALARM	$410.00	$0.00
0	1117644	ECCO SA940 SMART ALARM (ILO of STD)	$290.00	$0.00
0	1104705	HOPPER FULL INDICATOR	$815.00	$0.00
		-------AUTO LUBE----------		
0	1101559	AUTO LUBE-SWEEPER (DUAL)	$5,160.00	$0.00
0	1101560	AUTOLUBE - SWEEPER & TRUCK	$7,365.00	$0.00
		-------AUTO SHUTDOWN------		
0	1101380	HIGH TEMPERTURE HYDRAULIC OIL - SHUTDOWN	$185.00	$0.00
0	1102798	HYDRAULIC LEVEL SHUTDOWN	$185.00	$0.00
		----------BROOMS---------		
0	1058158	STRIP MAINBROOM (URB)	$460.00	$0.00
0	1077151	URB STRIP MAINBROOM W/CENTER SWEEP MANDREL	$460.00	$0.00
0	1116786	VARIABLE SPEED	$2,350.00	$0.00
0	1096691	DEDUCT MAINBROOM & CORE	-$278.40	$0.00
0	1118838	MAINBROOM SPRING SUSPENSION **(NOT COMPATIBLE WITH HYDRAULIC CONTROL SIDEBROOMS)**	$0.00	$0.00
0	1118869	HYDRAULIC CONTROL SIDEBROOMS (**COMPATIABLE WITH CONVENTIONAL CHASSIS ONLY)**	$0.00	$0.00
#REF!	SPECIAL	HYDRAULIC CONTROL SIDEBROOMS (**COMPATIABLE WITH CABOVER CHASSIS ONLY)**	$0.00	$0.00
0	1109605	EXTENDED REACH RIGHT HAND SIDEBROOM **(AUTOCAR & PETERBILT CHASSIS)**	$1,410.00	$0.00
0	1105519	EXTENDED REACH RIGHT AND LEFT HAND SIDEBROOMS **(AUTOCAR & PETERBILT CHASSIS)**	$1,980.00	$0.00
0	1120361	EXTENDED REACH RIGHT HAND SIDEBROOM **(M2 & IH CHASSIS)**	$1,410.00	$0.00
0	1120782	EXTENDED REACH RIGHT AND LEFT HAND SIDEBROOMS **(M2 & IH CHASSIS)**	$1,980.00	$0.00
		-----CONVEYOR/ELEVATOR----		
0	1106049	HEAVY DUTY LOWER ROLLER	$1,050.00	$0.00
0	1118107	HIGH SPEED CONVEYOR MOTOR	$480.00	$0.00
0	1120662	SQUEEGEE CONVEYOR (ILO STANDARD RUBBER BELT)	$0.00	$0.00
		--------DECALS----------		
0	1102783	RED LOGO/SWOOSH-EAGLE	$0.00	$0.00
0	1102784	WHITE LOGO/SWOOSH - EAGLE	$0.00	$0.00
0	1122929	SHIP DECALS AND SWOOSH LOOSE IN HOPPER	$0.00	$0.00

MODEL: 4M EAGLE
EFFECTIVE DATE:01/01/2019
SUPERCEDES ALL PREVIOUS PRICE LISTS
DEALER PRICE LIST (U.S. DOLLARS)

QUANTITY	PART NUMBER	MODEL DESCRIPTION	2019 LIST PRICE	2019 EXTENDED
		----------GAUGES----------		
0	1101379	BROOM HOUR METERS	$395.00	$0.00
0	1111656	HYDRAULIC OIL TEMPERTURE DISPLAY (IN CAB)	$315.00	$0.00
0	1119940	IN-CAB AUXILIARY ENGINE AIR RESTRICTION GAUGE	$800.00	$0.00
		----------HOPPER----------		
0	1120240	HOPPER INTERIOR LED LIGHT	$845.00	$0.00
0	1101951	STAINLESS STEEL HOPPER	$9,420.00	$0.00
0	1115491	EXTENDED HOPPER CHUTE	$1,025.00	$0.00
		-----EXTRA MANUALS----		
0	0701682	EAGLE OPERATORS MANUAL	$55.00	$0.00
0	0702462	EAGLE SERVICE MANUAL	$95.00	$0.00
0	0702242	EAGLE PARTS BOOK	$95.00	$0.00
0	0704072	CUMMINS OPERATORS & MAINTENANCE MANUAL	$135.00	$0.00
0	0704073	CUMMINS TROUBLESHOOTING MANUAL	$180.00	$0.00
		----LIFE LINER SYSTEM----		
0	1104503	LIFELINER HOPPER SYSTEM W/WARRANTY	$4,715.00	$0.00
0	1115546	LIFELINER HOPPER SYSTEM W/WARRANTY - LONG CHUTE	$5,650.00	$0.00
		---------LIGHTS----------		
0	1103553	PACKAGE 1 : SINGLE REAR/SINGLE HOPPER BEACON; LED WITH GUARD	$2,020.00	$0.00
0	1103533	PACKAGE 2 : DUAL REAR/SINGLE HOPPER BEACON; LED WITH GUARD	$2,760.00	$0.00
0	1125926	PACKAGE 3 : DUAL REAR/SINGLE HOPPER BEACON; LED WITH GUARD & LED ARROWSTICK	$4,320.00	$0.00
0	1104618	PACKAGE 4 : SINGLE REAR/SINGLE HOPPER MOUNT AND GUARD W/O BEACONS	$1,650.00	$0.00
0	1104619	PACKAGE 5 : DUAL REAR/SINGLE HOPPER MOUNT AND GUARD W/O BEACONS	$2,045.00	$0.00
0	1102735	LED STOP/TAIL/TURN/REAR ID/CLEARANCE LIGHTS	$370.00	$0.00
0	1125927	REAR MOUNTED LED ARROWSTICK	$1,785.00	$0.00
0	1102736	(2) REAR LOW MOUNTED OVAL AMBER LED FLASHERS	$480.00	$0.00
0	1103898	(2) REAR HIGH MOUNTED OVAL AMBER LED FLASHERS	$595.00	$0.00
0	1104481	ARROWBOARD - REAR	$2,120.00	$0.00
0	1114836	(3) LED WORK LIGHTS (1 EACH SIDE BROOM, 1 ON MAINBROOM)	$520.00	$0.00
0	1114837	(4) LED WORK LIGHTS (1 EACH SIDE BROOM, 2 ON MAINBROOM)	$840.00	$0.00
		----------PM10----------		
0	1116589	PM10 COMPLIANT (RULE 1186)	$3,210.00	$0.00
		----------SAFETY----------		
0	1101037	SLOW MOVING VEHICLE SIGN	$165.00	$0.00
0	1104991	REMOVE REAR CAMERA	$0.00	$0.00
0	SPECIAL	LEFT HAND SIDE CAMERA IN ADDITION TO STD REAR	$555.00	$0.00
0	9306848	TRIANGLE REFLECTIVE FLARES (3)	$90.00	$0.00
		-------SWEEP COMPONTENTS--		
0	1116574	CARBIDE DIRT SHOES (ILO RUBBER)	$890.00	$0.00
0	1116575	RUBBER MOUNTED CARBIDE DRAG SHOES TWO-ROW (ILO RUBBER)	$835.00	$0.00
0	1100656	SIDEBROOM TILT - RIGHT	$995.00	$0.00
0	1100660	SIDEBROOM TILT - LEFT	$995.00	$0.00
0	1117070	SIDEBROOM TILT - RIGHT W/INDICATOR	$1,060.00	$0.00
0	1117071	SIDEBROOM TILT - LEFT W/INDICATOR	$1,060.00	$0.00
0	SPECIAL	SQUEEGEE CONVEYER (ILO CLEATED BELT)	$0.00	$0.00
		-------SWEEPER ENGINE-----		
0	1120322	AUXILIARY ENGINE BATTERY DISCONNECT SWITCH	$530.00	$0.00
0	6063004	EXTRA KEY	$50.00	$0.00
0	1102752	SY-KLONE AUX ENGINE PRECLEANER	$670.00	$0.00
0	1119563	BLOCK HEATER	$465.00	$0.00

MODEL: 4M EAGLE
EFFECTIVE DATE:01/01/2019
SUPERCEDES ALL PREVIOUS PRICE LISTS
DEALER PRICE LIST (U.S. DOLLARS)

QUANTITY	PART NUMBER	MODEL DESCRIPTION	2019 LIST PRICE	2019 EXTENDED
		-----TOOLS/TOOLBOXES------		
0	1036150	HYDRANT WRENCH	$100.00	$0.00
		----------WATER---------		
0	1032484	25' WATER FILL HOSE (ILO 16' 8")	$205.00	$0.00
0	1108830	AIR PURGE FOR WATER SYSTEM	$400.00	$0.00
		----------PAINT----------		
0	SPECIAL	SWEEPER PAINTED RAL 1023, 1037, 3020, 1018	540.00	$0.00
0	SPECIAL	SWEEPER PAINTED ANY OTHER RAL COLOR	1285.00	$0.00
0	SPECIAL	SWEEPER PAINTED NON RAL	3890.00	$0.00
		----- M2 CHASSIS OPTIONS -----		
0	1071235	FUEL CAP SAFETY LOCK	$230.00	$0.00
0	1075400	AM/FM/CD RADIO	$935.00	$0.00
0	1080756	LEFT HAND FENDER MOUNTED MIRROR	$575.00	$0.00
0	1081188	EXTRA KEY	$50.00	$0.00
0	1081365	IN CAB AIR FILTER RESTRICTION INDICATOR	$875.00	$0.00
0	1081747	(2) BOSTROM AIR 905 CLOTH HI-BACK	$2,105.00	$0.00
0	1081748	(1) AIR CLOTH HI-BACK SEAT	$1,090.00	$0.00
0	1081909	SINGLE ARM REST - VINYL **(ONLY W/AIR RIDE SEATS)**	$380.00	$0.00
0	1081910	DUAL ARM REST - VINYL **(ONLY W/AIR RIDE SEATS)**	$715.00	$0.00
0	1081911	SINGLE ARM REST - CLOTH **(ONLY W/AIR RIDE SEATS)**	$380.00	$0.00
0	1081912	DUAL ARM REST - CLOTH **(ONLY W/AIR RIDE SEATS)**	$715.00	$0.00
0	1081956	DAYTIME RUNNING LIGHTS	$1,110.00	$0.00
0	1090653	DUAL AIR HORN	$1,640.00	$0.00
0	1101567	2 1/2 LB. FIRE EXTINGUISHER	$225.00	$0.00
0	1101568	5 LB. FIRE EXTINGUISHER	$255.00	$0.00
0	1109607	12" CONVEX MIRRORS (IL0 STD 8")	$335.00	$0.00
0	1103751	SINGLE CAB MOUNTED BEACON; LED WITH GUARD	$1,785.00	$0.00
0	1117611	FULL WIDTH FRONT SPRAY BAR	$1,070.00	$0.00
0	1120505	SPARE TIRE / WHEEL	$1,390.00	$0.00
		-----NAVISTAR CHASSIS OPTIONS-----		
0	4820001	CAB STANDARD WHITE	$0.00	$0.00
0	1063731	NAV CAB PAINTED SPECIAL COLOR	$3,805.00	$0.00
0	1086733	LEFT HAND FENDER MOUNTED MIRROR	$530.00	$0.00
0	1091761	EXTRA KEY	$65.00	$0.00
0	1091770	(2) ELECTRIC & (1) AIR HORN	$1,960.00	$0.00
0	1097641	NATIONAL AIR RIDE SEAT - PASSENGER SIDE - VINYL	$2,435.00	$0.00
0	1097642	NATIONAL AIR RIDE SEAT-PASSENGER SIDE- VINYL W/ARM REST	$2,600.00	$0.00
0	1097643	NATIONAL AIR RIDE SEAT-PASSENGER SIDE - CLOTH	$2,305.00	$0.00
0	1097644	NATIONAL AIR RIDE SEAT-PASSENGER SIDE- CLOTH W/ARM REST	$2,450.00	$0.00
0	1097645	NATIONAL AIR RIDE SEAT - DRIVER SIDE - VINYL	$2,165.00	$0.00
0	1097646	NATIONAL AIR RIDE SEAT-DRIVERS SIDE- VINYL W/ARM REST	$2,305.00	$0.00
0	1097647	NATIONAL AIR RIDE SEAT - DRIVER SIDE - CLOTH	$2,305.00	$0.00
0	1097648	NATIONAL AIR RIDE SEAT - DRIVER SIDE - CLOTH W/ARM REST	$2,645.00	$0.00
0	1099317	(1) ELECTRIC HORN	$435.00	$0.00
0	1091822	AM/FM/CD RADIO	$935.00	$0.00
0	1101567	2 1/2 LB. FIRE EXTINGUISHER	$225.00	$0.00
0	1101568	5 LB. FIRE EXTINGUISHER	$255.00	$0.00
0	1117611	FULL WIDTH FRONT SPRAY BAR	$1,070.00	$0.00

MODEL: 4M EAGLE
EFFECTIVE DATE:01/01/2019
SUPERCEDES ALL PREVIOUS PRICE LISTS
DEALER PRICE LIST (U.S. DOLLARS)

QUANTITY	PART NUMBER	MODEL DESCRIPTION	2019 LIST PRICE	2019 EXTENDED
		----AUTOCAR XPERT CHASSIS OPTIONS----		
0	1107220	2 BATTERIES, 31 ECL, 12V, 1900CCA	$675.00	$0.00
0	1107230	AUTO AIR DRAIN VALVE	$885.00	$0.00
0	1107232	BATTERY DISCONNECT	$1,640.00	$0.00
0	1107236	DUAL UNDERCAB AIR HORN	$1,390.00	$0.00
0	1107238	ISRI HT914 HIGH BACK, AIR RIDE, RH	$2,180.00	$0.00
0	1107239	ISRI HT914 HIGH BACK, AIR RIDE, LH	$2,180.00	$0.00
0	1107243	IN CAB AIR RESTRICTOR	$570.00	$0.00
0	1107244	DAYTIME RUNNING LIGHTS FOR US ONLY	$555.00	$0.00
0	1108945	AM/FM RADIO WITH CD	$935.00	$0.00
0	1109244	EXTRA KEY	$120.00	$0.00
0	1120374	2 1/2 LB. FIRE EXTINGUISHER	$225.00	$0.00
0	1120375	5 LB. FIRE EXTINGUISHER	$255.00	$0.00
0	1116212	2014 AUTOCAR SERVICE MANUAL 2010 EMISSIONS- CD	$690.00	$0.00
		---------WARRANTY---------		
0	EW-ME-NA-2PL	EAGLE 2ND YEAR PARTS/LABOR	$2,860.00	$0.00
0	EW-ME-NA-3PL	EAGLE 3RD YEAR PARTS/LABOR	$5,405.00	$0.00
0	EW-ME-NA-4PL	EAGLE 4TH YEAR PARTS/LABOR	$7,650.00	$0.00
0	EW-ME-NA-5PL	EAGLE 5TH YEAR PARTS/LABOR	$9,820.00	$0.00
		------FREIGHT RATES------		
0	FRT-111-001	SELF SHIPPING DOCK CHARGE	$595.00	$0.00
0	FRT-111-002	FREIGHT-IL,WI,IA,IN,MI,MN,KY	$1,310.00	$0.00
0	FRT-111-003	FREIGHT-TN,WV,PA,NY	$2,850.00	$0.00
0	FRT-111-004	FREIGHT-NH,VT,ME	$3,595.00	$0.00
0	FRT-111-005	FREIGHT-NEW YORK CITY	$4,110.00	$0.00
0	FRT-111-006	FREIGHT-ND,SD,NE,OK,KS,AR,AL,MO	$2,715.00	$0.00
0	FRT-111-007	FREIGHT-AZ,UT	$5,445.00	$0.00
0	FRT-111-008	FREIGHT-CA,NV,ID,OR,WA	$6,355.00	$0.00
0	FRT-111-009	FREIGHT- CHICAGO/MILWAUKEE	$900.00	$0.00
0	FRT-111-010	FREIGHT-FL,LA,TX,NM,CO,WY,MT	$4,145.00	$0.00
0	FRT-111-011	FREIGHT-OH,ST.LOUIS METRO	$1,530.00	$0.00
0	FRT-111-012	FREIGHT,MS,GA,SC,NC,VA,MD	$3,130.00	$0.00
0	FRT-111-013	FREIGHT - RI,DE,CT,NJ,MA	$2,740.00	$0.00
0	FRT-111-014	FREIGHT - LAREDO, TX	$6,700.00	$0.00
0	FRT-111-015	SPECIALIZED TRANSPORT EQUIPMENT	$1,030.00	$0.00
			SUB TOTAL	**$0.00**
		-----DISCOUNTS-----		
0	DISC-111-ADDL	ADDITIONAL DISCOUNT	$0.00	$0.00
0	DISC-111-PROMO	PROMO DISCOUNT	$0.00	$0.00
		SPECIAL RFQ OPTIONS / OTHER DESCRIPTIONS		
			GRAND TOTAL	**$0.00**

MODEL: MEGAWIND COMBO VACUUM T4
EFFECTIVE DATE: 01/01/2019
SUPERCEDES ALL PREVIOUS PRICE LISTS
DEALER PRICE LIST (U.S. DOLLARS)

Purchase Order #	**Ship To Address:**
Order Date:	
Delivery Date Requirment If Any:	**State Penalty Clause If Applicable:**

QUANTITY	PART NUMBER	MODEL DESCRIPTION	2019 LIST PRICE	2019 EXTENDED
		TIER 4		
0	1123368	**MEGAWIND 10 YARD HOPPER TIER 4 (CATCH BASIN ONLY)**	**$162,250**	$0.00
0	1123369	**MEGAWIND 10 YARD HOPPER SINGLE SIDEBROOM TIER 4**	**$187,375**	$0.00
0	1123370	**MEGAWIND 10 YARD HOPPER DUAL SIDEBROOM TIER 4**	**$203,500**	$0.00
		Tier IIII emissions, 10 cu. yd hopper, 36 in. (711 mm) trailing arm side broom on right hand side (SINGLE) and on both sides (DUAL), 12 inch, rear mounted vacuum hose with hydraulically operated, double articulated boom with wired pendant control, ergonomic control console, sweeper is powder coated from powder coatings chart 2003/N with powder coated gray undercarriage and including the standard features listed below.		
0	1123371	**MEGAWIND 13 YARD HOPPER TIER 4 (CATCH BASIN ONLY)**	**$168,625**	$0.00
0	1123372	**MEGAWIND 13 YARD HOPPER SINGLE SIDEBROOM TIER 4**	**$193,750**	$0.00
0	1123373	**MEGAWIND 13 YARD HOPPER DUAL SIDEBROOM TIER 4**	**$211,125**	$0.00
		Tier IIII emissions, 13 cu. yd hopper, 36 in. (711 mm) trailing arm side broom on right hand side (SINGLE) and on both sides (DUAL), 12 inch, rear mounted vacuum hose with hydraulically operated, double articulated boom with wired pendant control, ergonomic control console, sweeper is powder coated from powder coatings chart 2003/N with powder coated gray undercarriage and including the standard features listed below.		
		-----CHASSIS-----		
		10 YARD HOPPER		
0	SPECIAL	M2 196" WB - GVWR 33,000 (NON STOCKED CHASSIS)	CONTACT INSIDE SALES	$0.00
		13 YARD HOPPER		
0	SPECIAL	M2 196" WB - GVWR 38,000 (2010 EMISSIONS) LIMITED QTY	CONTACT INSIDE SALES	$0.00
		-----CHASSIS MOUNTING CHARGE-----		
0	SPECIAL	M2 196" WB - ALTERATIONS (USE W/CATCH BASIN ONLY)	$2,625	$0.00
0	SPECIAL	M2 196" WB - ALTERATIONS (USE W/DUAL SWEER GEAR)	$2,625	$0.00
0	SPECIAL	M2 196" WB - ATLERATIONS (USE W/SINGLE SWEER GEAR)	$2,625	$0.00
1	4820001	PAINT CAB STANDARD WHITE	N/C	$0.00
1	4810001	PAINT SWEEPER STANDARD WHITE	N/C	$0.00
0	SPECIAL	SWEEPER COLOR OTHER THAN STANDARD WHITE	SEE INSIDE SALES	$0.00

NOTE: A BODY includes the cost of Elgin standard white finish paint. It does not however, include the price of the chassis.

NOTE: One year warranty on all Elgin supplied parts and labor. Consult your Elgin dealer for full warranty details.

MODEL: MEGAWIND COMBO VACUUM T4
EFFECTIVE DATE: 01/01/2019
SUPERCEDES ALL PREVIOUS PRICE LISTS
DEALER PRICE LIST (U.S. DOLLARS)

QUANTITY	PART NUMBER	MODEL DESCRIPTION	2019 LIST PRICE	2019 EXTENDED

STANDARD FEATURES

(Applies to the 10 Yard Hopper and 13 Yard Hopper)

1	0701417	MEGAWIND OPERATORS	STANDARD	$0.00
1	0702259	MEGAWIND PARTS	STANDARD	$0.00
1	0704046	JD 4045HF TR4 OPERATORS MANUAL	STANDARD	$0.00
1	0704047	JD 4045HF TR4 PARTS BOOK	STANDARD	$0.00
1	0701705	MACHINE DELIVERY PACKET	STANDARD	$0.00
1	1032481	FILL HOSE, 16'8" WITH STRAINER AND COUPLING	STANDARD	$0.00
1	0730166	BROOM MEASUREMENT RULER	STANDARD	$0.00

Alternator, 120 amp.
Auxiliary engine:
  John Deere 4045TFC03, 4 cylinder Turbocharged diesel
  Horsepower: 74 HP (55 kW) at 2400 RPM
  Displacement: 276 cu. in. (4.5 L)
Anti-Siphon fill
Auto Shutdown Auxiliary Engine
Backup alarm, electric
Camera, Rear View

Control console with rocker switches for all hopper functions and sweep functions (if so equipped), including memory sweep in an ergonomically designed console with full gauge package including diagnostic gauge, tachometer, engine hour meter, oil pressure indicator, coolant temperature, voltmeter and fuel level indicator, auxiliary engine RPM control, side broom down pressure controls, manual reset circuit breakers, water level gauge and warning lights for hopper "up", hopper rear door "open" and hopper "full"

Doors, fiberglass access doors provide easy service and maintenance on auxiliary engine, hydraulic and electrical system
Drive: Fluid coupling blower drive with power belt
Electronic Throttle
Hopper rear door, hydraulically opened/closed and locked/unlocked with external controls
Fuel tank, 50 gallon (189 L)
Fuel water separator for aux engine
Hydraulic oil cooler
Hydraulically controlled, double articulated boom
Hopper debris level indicator
In cab hopper dump
LED clearance lights
Spray wand
Water tank, 335 gallons
12” vacuum hose
23 GPM, triple diaphragm jetter pump

MODEL: MEGAWIND COMBO VACUUM T4
EFFECTIVE DATE: 01/01/2019
SUPERCEDES ALL PREVIOUS PRICE LISTS
DEALER PRICE LIST (U.S. DOLLARS)

QUANTITY	PART NUMBER	MODEL DESCRIPTION	2019 LIST PRICE	2019 EXTENDED
		-----ADDITIONAL MANUALS----		
0	704046	JD 4045HF TR4 OPERATORS MANUAL	$55.00	$0.00
0	704047	JD 4045HF TR4 PARTS BOOK	$100.00	$0.00
0	704048	JD 4045HF TR4 TECH MANUAL	$190.00	$0.00
0	0701417	MEGAWIND OPERATORS	$55.00	$0.00
0	0702259	MEGAWIND PARTS	$95.00	$0.00
0	0702471	MEGAWIND SERVICE	$95.00	$0.00
		----------ALARM---------		
0	1122644	BACK UP ALARM - PRECO	$285.00	$0.00
0	1048703	BACK UP ALARM - SMART	$440.00	$0.00
		---------AUTO LUBE--------		
0	1124198	AUTO LUBE - SWEEPER	$6,095.00	$0.00
		------AUX ENGINE----------		
0	1120793	TURBO II PRECLEANER	$510.00	$0.00
0	1121842	SYKLONE PRECLEANER	$625.00	$0.00
0	1078204	AUXILIARY AIR FILTER RESTRICTION INDICATOR LIGHT	$655.00	$0.00
0	1122461	BATTERY DISCONNECT	$530.00	$0.00
0	SPECIAL	COLD WEATHER STARTING KIT	$490.00	$0.00
0	SPECIAL	AUXILIARY ENGINE PRE-CLEANER	$615.00	$0.00
0	1121729	BLOCK HEATER	$465.00	$0.00
		----------DECALS---------		
0	1094405	RED LOGO-MEGAWIND	$0.00	$0.00
0	1096267	WHITE LOGO-MEGAWIND	$0.00	$0.00
0	1122929	SHIP DECALS AND SWOOSH LOOSE IN HOPPER	$0.00	$0.00
		----------HOPPER----------		
		10 YARD		
0	1105204	SS HOPPER SCREEN	$1,915.00	$0.00
0	1097562	LIFELINER HOPPER SYSTEM W/WARRANTY	$9,955.00	$0.00
0	1085864	RIGHT HAND INSPECTION DOOR	$455.00	$0.00
0	1085882	LEFT HAND INSPECTION DOOR	$455.00	$0.00
0	1085883	RIGHT HAND INSPECTION DOOR & STEP	$810.00	$0.00
0	SPECIAL	LEFT HAND INSPECTION DOOR & STEP	$810.00	$0.00
0	1094441	6" HOPPER DRAIN	$845.00	$0.00
		13 YARD		
0	SPECIAL	SS HOPPER SCREEN	$1,885.00	$0.00
0	SPECIAL	LIFELINER HOPPER SYSTEM W/WARRANTY	$12,065.00	$0.00
0	1098519	6" HOPPER DRAIN	$1,135.00	$0.00
		----------LIGHTS---------		
0	1124117	REAR ARROWBOARD LED	$2,735.00	$0.00
0	1124119	LED REAR HOPPER BEACON/ & GUARD WITH LED ARROWBOARD	$3,140.00	$0.00
		----------PAINT---------		
0	4811018	PAINT SWEEPER ZINC YELLOW RAL 1018	$525.00	$0.00
0	4811023	PAINT SWEEPER TRAFFIC YELLOW RAL 1023	$525.00	$0.00
0	4811037	PAINT SWEEPER SUN YELLOW RAL 1037	$525.00	$0.00
0	4813020	PAINT SWEEPER TRAFFIC RED RAL 3020	$525.00	$0.00
0	SPECIAL	PAINT SWEEPER ANY OTHER RAL COLOR	$1,265.00	$0.00
0	SPECIAL	PAINT SWEEPER NON RAL COLOR	$3,830.00	$0.00

MODEL: MEGAWIND COMBO VACUUM T4
EFFECTIVE DATE: 01/01/2019
SUPERCEDES ALL PREVIOUS PRICE LISTS
DEALER PRICE LIST (U.S. DOLLARS)

QUANTITY	PART NUMBER	MODEL DESCRIPTION	2019 LIST PRICE	2019 EXTENDED
		----------SAFETY----------		
0	1048643	SLOW MOVING VEHICLE SIGN **(10 YARD HOPPER ONLY)**	$165.00	$0.00
0	SPECIAL	REMOVE REAR CAMERA (10 YARD ONLY)	N/C	$0.00
0	SPECIAL	REMOVE REAR CAMERA (13 YARD ONLY)	N/C	$0.00
0	SPECIAL	LEFT HAND SIDE CAMERA	$600.00	$0.00
		----SIDE BROOM OPTIONS----		
0	1123813	SIDEBROOM TILT LEFT HAND	$995.00	$0.00
0	1123812	SIDEBROOM TILT RIGHT HAND	$995.00	$0.00
		-------SWEEPER OPTIONS----		
0	1079679	AIR PURGE	$435.00	$0.00
0	1124236	AUTO SHUTTER LEFT HAND	$1,295.00	$0.00
0	1124237	AUTO SHUTTER RIGHT HAND	$1,295.00	$0.00
0	1124238	DUAL SHUTTER RIGHT HAND	$1,440.00	$0.00
		------TOOL BOX/TOOL KIT---		
0	1057687	TOOL BOX W/TOOLS	$750.00	$0.00
		------WATER SYSTEM--------		
0	1036150	HYDRANT WRENCH	$100.00	$0.00
0	1032484	25' WATER FILL HOSE (ILO 16' 8")	$205.00	$0.00
0	1040094	QUICK DISCONNECT WATER FILL (STANDARD W/HOPPER DELUGE)	$530.00	$0.00
0	1059209	HOPPER DELUGE	$1,060.00	$0.00
0	1095701	HOSE REEL for MEDIUM PRESSURE WASHDOWN	$1,225.00	$0.00
0	SPECIAL	HOSE REEL for MEDIUM PRESSURE WASHDOWN (USE W/INSPECTION DOOR) **(10 YARD HOPPER ONLY)**	$1,205.00	$0.00
0	1122992	HIGH PRESSURE WASHDOWN **(ILO STD JETTER PUMP)**	$1,980.00	$0.00
0	1122713	HOSE REEL FOR HIGH PRESSURE WASHDOWN	$1,190.00	$0.00
0	1122714	HOSE REEL FOR HIGH PRESSURE WASHDOWN (USE W/INSPECTION DOOR)	$1,190.00	$0.00
0	1096051	CATCH BASIN SPRAY WAND, 4' SOILD STREAM (NOT COMPATIABLE WITH HIGH PRESSURE WASHDOWN)	$245.00	$0.00
0	1096053	CATCH BASIN SPRAY WAND, 2' ADJUSTABLE STREAM (NOT COMPATIABLE WITH HIGH PRESSURE WASHDOWN)	$330.00	$0.00
		-----WANDERING HOSE EXTENSIONS-----		
0	1096358	REAR MOUNTED CATCH BASIN EXTENSION 12" DIAMETER	$1,010.00	$0.00
0	1096563	REAR MOUNTED CATCH BASIN EXTENSION 10" DIAMETER	$895.00	$0.00
0	1096564	FLANGE REDUCER 10" TO 8" DIAMETER	$130.00	$0.00
0	1096565	FLANGE REDUCER 12" TO 10" DIAMETER	$225.00	$0.00
		-----M2 CHASSIS OPTIONS-----		
0	1070639	LED STOP/TURN/TAIL	$665.00	$0.00
0	1081188	EXTRA KEY	$50.00	$0.00
0	1081901	SPARE TIRE/WHEEL	$1,305.00	$0.00
0	1086636	FRONT SPRAY BAR - SINGLE	$1,055.00	$0.00
0	1086637	FRONT SPRAY BAR - DUAL	$770.00	$0.00
0	1123761	AUXILIARY HYDRAULIC PUMP	$1,415.00	$0.00
0	1090653	HORN-AIR, DUAL	$1,640.00	$0.00

MODEL: MEGAWIND COMBO VACUUM T4
EFFECTIVE DATE: 01/01/2019
SUPERCEDES ALL PREVIOUS PRICE LISTS
DEALER PRICE LIST (U.S. DOLLARS)

QUANTITY	PART NUMBER	MODEL DESCRIPTION	2019 LIST PRICE	2019 EXTENDED
		-----M2 CHASSIS OPTIONS CONTINUED-----		
0	1124199	AUTO LUBE SWEEPER/TRUCK	$7,610.00	$0.00
0	1093019	2 1/2 LB. FIRE EXTINGUISHER	$225.00	$0.00
0	1093020	5 LB. FIRE EXTINGUISHER	$255.00	$0.00
		----------WARRANTY--------		
0	EW-AIR-NA-2PL	MEGAWIND 2ND YEAR PARTS/LABOR	$2,775.00	$0.00
0	EW-AIR-NA-3PL	MEGAWIND 3RD YEAR PARTS/LABOR	$4,220.00	$0.00
0	EW-AIR-NA-4PL	MEGAWIND 4TH YEAR PARTS/LABOR	$6,445.00	$0.00
0	EW-AIR-NA-5PL	MEGAWIND 5TH YEAR PARTS/LABOR	$8,785.00	$0.00
		-------FREIGHT RATES-------		
		NOTE: SPECIALIZED TRANSPORT EQUIPMENT IS REQUIRED FOR 10 YARD MEGAWIND. 13 YARD IS DRIVE AWAY ONLY		
0	FRT-123-001	SELF SHIPPING DOCK CHARGE	$595.00	$0.00
0	FRT-123-002	FREIGHT-IL,WI,IA,IN,MI,MN,KY	$1,310.00	$0.00
0	FRT-123-003	FREIGHT-TN,WV,PA,NY	$2,850.00	$0.00
0	FRT-123-004	FREIGHT-NH,VT,ME	$3,595.00	$0.00
0	FRT-123-005	FREIGHT-NEW YORK CITY	$4,110.00	$0.00
0	FRT-123-006	FREIGHT-ND,SD,NE,OK,KS,AR,AL,MO	$2,715.00	$0.00
0	FRT-123-007	FREIGHT-AZ,UT	$5,445.00	$0.00
0	FRT-123-008	FREIGHT-CA,NV,ID,OR,WA	$6,355.00	$0.00
0	FRT-123-009	FREIGHT- CHICAGO/MILWAUKEE	$900.00	$0.00
0	FRT-123-010	FREIGHT-FL,LA,TX,NM,CO,WY,MT	$4,145.00	$0.00
0	FRT-123-011	FREIGHT-OH,ST.LOUIS METRO	$1,530.00	$0.00
0	FRT-123-012	FREIGHT,MS,GA,SC,NC,VA,MD	$3,130.00	$0.00
0	FRT-123-013	FREIGHT - RI,DE,CT,NJ,MA	$2,740.00	$0.00
0	FRT-123-014	FREIGHT - LAREDO, TX	$6,700.00	$0.00
0	FRT-123-015	SPECIALIZED TRANSPORT EQUIPMENT	$1,030.00	$0.00
			SUB TOTAL	$0.00
		-----DISCOUNTS-----		
0	DISC-120-ADDL	ADDITIONAL DISCOUNT	$0.00	$0.00
0	DISC-120-PROMO	PROMO DISCOUNT	$0.00	$0.00

SPECIAL RFQ OPTIONS / OTHER DESCRIPTIONS

GRAND TOTAL	$0.00

MODEL: ECOINFUSED PELICAN NP 55KW
EFFECTIVE DATE: 01/01/2019
SUPERCEDES ALL PREVIOUS PRICE LISTS
DEALER PRICE LIST (U.S. DOLLARS)

Purchase Order #	**Ship To Address:**
Order Date:	
Delivery Date Requirment If Any:	**State Penalty Clause If Applicable:**

QUANTITY	PART NUMBER	MODEL DESCRIPTION	2019 LIST PRICE	2019 EXTENDED
0	1120933	**PELICAN P SINGLE, TIER 4F, 55KW, USA AND CANADA**	$193,125	$0.00
		Single steer & gutter broom, right side hydraulically driven, Tier 4F JD 4045TF low emission diesel engine, hydrostatic drive and steering, chassis and wheels powder coated standard white and including the standard features below.		
0	1120847	**PELICAN P DUAL, TIER 4F, 55KW, USA AND CANADA**	$204,250	$0.00
		Dual steer & gutter brooms, hydraulically driven, Tier 4F JD 4045TF low emission diesel engine, hydrostatic drive and steering, chassis and wheels powder coated standard white and including the standard features below.		

NOTE: One year warranty on all Elgin supplied parts and labor. Consult your Elgin dealer for full warranty details.

STANDARD FEATURES

1	0701443	PELICAN P OPERATORS MANUAL	STANDARD	$0.00
1	0702261	PELICAN P PARTS BOOK	STANDARD	$0.00
1	0704046	JOHN DEERE OPERATORS MANUAL	STANDARD	$0.00
1	0704047	JOHN DEERE PARTS BOOK	STANDARD	$0.00
1	0730166	BROOM MEASUREMENT RULER	STANDARD	$0.00
1	0701708	MACHINE DELIVERY PACKET	STANDARD	$0.00
1	0702020	ELGIN SAFETY MANUAL	STANDARD	$0.00

Air cleaner, two-stage, dry type with restriction indicator
Air conditioner
Alternator, 120 amp
Anti siphon water fill
Automatic engine shutdown (oil pressure/engine temperature)
Automatic pickup in reverse
B20 biodiesel compatible
Back up alarm, electric
Battery, maintenance free
Brakes, power
Broom, main, hydraulically suspended
Broom, main, in cab pressure control
Broom, main, prefab, disposable
Broom, side broom, hydraulically suspended
Broom, side broom, in cab pressure control
Bumper pads, front jack
Coolant recovery system
Doors, see through glass, prop-able
Electronic Throttle
Engine, hour meter
Gauges & Warning lights:
  engine coolent temperature
  engine oil pressure
  fuel level
  speedometer & odometer w/trip set
Fenders, over front wheels
Flushing system for hopper/conveyor
Fuel tank, 35 gallons
Fuel Water separator with indicator light
Heater, pressurizer with filtered air, defroster
Hose, hydrant fill, 16' 8" with coupling
Light, spotlight, adjustable, one per side broom
Lights, 2 combination, tail/stop lights
Lights, headlights, multiple beam
Lights, low water light
Low Hydraulic Warning
Main broom controls in cab
Manuals, operator and parts
Mirror, inside rear view
Mirrors, outside, front mounted 6" fish eyes
Mirrors, outside, front post mounted, west coast type, one each side
Parking brake with interlock
Rear Camera & in cab monitor
Return to sweep feature
Seat Belts (both sides for dual)
Seats, extra wide cordura suspension seats with arm rests
Signals, self-canceling directional with hazard switch
Sprung guide wheel, heavy duty
Steering wheel, tilt and telescoping
Sun visors
Tachometer, diesel engine
Tires, tubeless radials
Tow loops, four
Water tank, fill gauge
Water tank, molded polyethylene: 220 gallon total nominal capacity
Wheels, dual guide
Wheels painted grey
Window, opening front opera
Windshield washer
Windshield wipers with intermittent setting
Windshield, tinted

QUANTITY	PART NUMBER	MODEL DESCRIPTION	2019 LIST PRICE	2019 EXTENDED
		-----ADDITIONAL MANUALS----		
0	701443	PELICAN OPERATORS MANUAL	$55.00	$0.00
0	702261	PELICAN PARTS BOOK	$95.00	$0.00
0	702453	PELICAN SERVICE	$95.00	$0.00
0	704046	JOHN DEERE OPERATORS MANUAL	$55.00	$0.00
0	704047	JOHN DEERE PARTS BOOK	$100.00	$0.00
0	704048	JOHN DEERE SERVICE	$190.00	$0.00
		----------ALARMS---------		
0	1089339	SMART BACK UP ALARM	$290.00	$0.00
0	1089728	GROTE LOUD MOUTH BACKUP ALARM	$290.00	$0.00
		------AUTOLUBE----------		
0	1087667	MIDWEST AUTOLUBE - SINGLE	$5,700.00	$0.00
0	1087668	MIDWEST AUTOLUBE - DUAL	$6,405.00	$0.00
0	1089040	VOGEL AUTOLUBE - SINGLE	$7,185.00	$0.00
0	1089041	VOGEL AUTOLUBE - DUAL	$7,635.00	$0.00
0	1107312	VOGEL AUTOLUBE - DUAL (USE W/GREASABLE DIRT SHOES)	$9,415.00	$0.00
0	1103124	MIDWEST AUTOLUBE - DUAL (USE W/GREASABLE DIRT SHOES)	$7,365.00	$0.00
0	1108963	MIDWEST AUTOLUBE - SINGLE (USE W/GREASABLE DIRT SHOES)	$6,720.00	$0.00
		------AUTO SHUTDOWN-------		
0	1087563	HYDRAULIC LEVEL SHUTDOWN	$185.00	$0.00
0	1089429	HYDRAULIC LEVEL & TEMPERATURE SHUTDOWN	$365.00	$0.00
0	1120654	HYDRAULIC TEMPERATURE SHUTDOWN	$185.00	$0.00
		---------BROOMS----------		
0	1015558	EXTRA SET SIDE BROOM SEGMENT, FILLED	$255.00	$0.00
0	1087976	STRIP BROOM 66" URB	$920.00	$0.00
0	1088008	MAIN BROOM CORE ONLY	-$104.00	$0.00
0	1088800	50/50 POLY/WIRE MAINBROOM	$920.00	$0.00
0	1089518	DEDUCT MAIN BROOM & CORE	-$296.00	$0.00
0	1091361	URB STRIP BROOM - CENTER SWEEP	$920.00	$0.00
0	1094877	ALUMINUM SIDE BROOM SEGMENT PER SIDE	$660.00	$0.00
0	1094878	POLY/POLY SIDE BROOM SET	$135.00	$0.00
0	1095342	DEDUCT SIDE BROOM SEGMENT (PER SIDE)	-$120.00	$0.00
0	1118360	DOUBLE WRAP MAIN BROOM (ILO STD)	$1,040.00	$0.00
		----CONVEYOR/ELEVATOR-----		
0	1124786	CONVEYOR STALL ALARM	$735.00	$0.00
0	1087575	LOWER ROLLER DEFLECTOR	$510.00	$0.00
0	1120820	CONVEYOR CLEANOUT	$515.00	$0.00
		----------GAUGES----------		
0	1087539	MAINBROOM ODOMETER/HOUR METER	$395.00	$0.00
0	1088858	LOOSE CHARGE PRESSURE GAUGE	$315.00	$0.00
0	1120827	IN CAB AIR RESTRICTION GAUGE	$380.00	$0.00
		-----LIFELINER SYSTEM / EPOXY COATING-----		
0	1092236	LIFELINER HOPPER SYSTEM W/WARRANTY	$4,070.00	$0.00

EFFECTIVE DATE: 01/01/2019
SUPERCEDES ALL PREVIOUS PRICE LISTS
DEALER PRICE LIST (U.S. DOLLARS)

QUANTITY	PART NUMBER	MODEL DESCRIPTION	2019 LIST PRICE	2019 EXTENDED
		---------LIGHTS----------		
0	1087873	LED CLEARANCE LIGHTS	$270.00	$0.00
0	1120770	LED ALTERNATING & FLASHING LIGHTS IN BATTERY COVER	$1,190.00	$0.00
0	1120744	(2) LED REAR FLOODS & BACKUP LIGHTS	$800.00	$0.00
0	1120840	LED RIGHT HAND SEAL BEAM WORK LIGHT	$310.00	$0.00
0	1120841	LED RIGHT HAND & LEFT HAND SEAL BEAM WORK LIGHTS	$610.00	$0.00
0	1101214	(2) CAB FORWARD FACING FLOOD LIGHTS WITH LIGHT BAR	$440.00	$0.00
0	1101215	(2) CAB FORWARD FACING FLOOD LIGHTS WITHOUT LIGHT BAR	$730.00	$0.00
0	1114404	(2) CAB FORWARD FACING LED FLOOD LIGHTS WITH LIGHT BAR	$1,130.00	$0.00
0	1114405	(2) CAB FORWARD FACING LED FLOOD LIGHTS WITHOUT LIGHT BAR	$1,455.00	$0.00
0	1101273	LED STOP/TAIL/TURN	$370.00	$0.00
0	1101318	PACKAGE 5: ONE LED STROBE W/ GUARD	$980.00	$0.00
0	1101319	PACKAGE 6: TWO LED STROBES W/ GUARD	$1,715.00	$0.00
0	1101320	PACKAGE 7: PACKAGE 6 + FOUR ROOF MOUNTED SWEEP FLASHERS **LED STOP/TAIL/TURN MUST BE ORDERED WITH THIS PACKAGE**	$2,295.00	$0.00
0	1101321	PACKAGE 8: PACKAGE 7 + LED FRONT ID LIGHTS AND REAR LED ARROWSTICK **LED STOP/TAIL/TURN MUST BE ORDERED WITH THIS PACKAGE**	$3,805.00	$0.00
0	1101322	PACKAGE 9: REAR LIGHT MOUNTING RAIL ONLY	$680.00	$0.00
0	1101323	PACKAGE 10: FRONT LIGHT MOUNTING RAIL ONLY	$680.00	$0.00
0	1101324	PACKAGE 11: REAR LIGHT MOUNTING RAIL AND WIRE/MOUNT/GUARD FOR 1 LIGHT	$750.00	$0.00
0	1101325	PACKAGE 12: REAR LIGHT MOUNTING RAIL AND WIRE/MOUNT/GUARD FOR 2 LIGHTS	$1,250.00	$0.00
0	1101326	PACKAGE 13: LED ARROWSTICK (ONLY)	$1,670.00	$0.00
0	1105084	PACKAGE 14: LED ARROWSTICK (USE WITH PACKAGE'S 1, 2, 3, 5, 6, 7)	$1,670.00	$0.00

EFFECTIVE DATE: 01/01/2019
SUPERCEDES ALL PREVIOUS PRICE LISTS
DEALER PRICE LIST (U.S. DOLLARS)

QUANTITY	PART NUMBER	MODEL DESCRIPTION	2019 LIST PRICE	2019 EXTENDED
		------PELICAN OPTIONS-----		
0	1042010	WATER FILL HOSE QUICK DISCONNECT	$530.00	$0.00
0	1125550	LICENSE PLATE HOLDER - FRONT & REAR	$235.00	$0.00
0	1087541	LOCKING ENGINE COMPARTMENT	$230.00	$0.00
0	1087605	CARBIDE DIRT SHOES	$1,120.00	$0.00
1	1087981	RED LOGO/SWOOSH	$0.00	$0.00
0	1087982	WHITE LOGO/SWOOSH	$0.00	$0.00
0	1122929	SHIP DECALS AND SWOOSH LOOSE IN HOPPER	$0.00	$0.00
0	1087995	25' WATER FILL HOSE (ILO 16' 8")	$205.00	$0.00
0	1097387	GREASABLE DIRT SHOES	$100.00	$0.00
0	1123319	SLIDING REAR WINDOW	$915.00	$0.00
0	1123322	STEEL RIGHT HAND DOOR W/ SLIDING WINDOW	$3,250.00	$0.00
0	1123320	STEEL RIGHT & LEFT HAND DOOR W/ SLIDING WINDOW	$4,650.00	$0.00
0	1123323	STEEL RIGHT HAND DOOR	$1,875.00	$0.00
0	1123321	STEEL RIGHT & LEFT HAND DOOR	$3,740.00	$0.00
0	1100256	RADIO INSTALL PACKAGE W/O RADIO	$390.00	$0.00
0	1101017	LEFT HAND AND RIGHT HAND "WEST COAST" STYLE MIRRORS HEATED & MOTORIZED. (DOES NOT HEAT OR MOTORIZE HOPPER CONVEX MIRRORS)	$1,285.00	$0.00
0	1124183	HEAVY DUTY DUAL LIMB GUARDS	$2,305.00	$0.00
0	1124182	HEAVY DUTY LIMB GUARD LEFTHAND ONLY	$1,275.00	$0.00
0	1124181	HEAVY DUTY LIMB GUARD RIGHT HAND ONLY	$1,275.00	$0.00
0	1101066	ASHTRAY & LIGHTER	$245.00	$0.00
0	1101244	AM/FM RADIO WITH CD & 2 MAP LIGHTS	$600.00	$0.00
0	1106698	GREASABLE CARBIDE DIRT SHOES	$1,360.00	$0.00
0	6063004	ADDITIONAL IGNITION KEY	$50.00	$0.00
0	1120655	25' WASHDOWN SYSTEM	$975.00	$0.00
		-------REFLECTORS---------		
0	1087538	REFLECTOR (ARMOURED) , SET OF 6	$160.00	$0.00
		------SIDE BROOM TILT-----		
0	1089502	LEFT HAND SIDEBROOM TILT WITH INDICATOR	$1,945.00	$0.00
0	1089503	RIGHT HAND SIDEBROOM TILT WITH INDICATOR	$1,945.00	$0.00
		---------SEATS----------		
0	1087555	RIGHT HAND BOSTROM AIR RIDE MID BACK CLOTH	$1,015.00	$0.00
0	1087556	LEFT HAND BOSTROM AIR RIDE MID BACK CLOTH	$1,015.00	$0.00
0	1087677	ALL VINYL STD SEAT	$35.00	$0.00
0	1088301	RIGHT HAND BOSTROM AIR RIDE HI BACK CLOTH	$1,015.00	$0.00
0	1088302	LEFT HAND BOSTROM AIR RIDE HI BACK CLOTH	$1,015.00	$0.00
0	1089316	RIGHT HAND BOSTROM AIR RIDE MID BACK -VINYL	$1,015.00	$0.00
0	1089317	LEFT HAND BOSTROM AIR RIDE MID BACK - VINYL	$1,015.00	$0.00
0	1089510	LEFT HAND MAGNUM STANDARD SEAT	$890.00	$0.00
0	1091686	LEFT HAND BOSTROM MID-BACK CLOTH	$1,690.00	$0.00
0	1093157	HEADREST FOR MAGNUM STD SEAT	$425.00	$0.00
		---------SAFETY----------		
0	1087559	(1) 2 1/2 LB. FIRE EXTINGUISHER	$225.00	$0.00
0	1088661	(2) 2 1/2 LB. FIRE EXTINGUISHER	$445.00	$0.00
0	1092020	REMOVE REAR CAMERA	$0.00	$0.00
0	1101067	LEFT HAND SIDE CAMERA	$555.00	$0.00
0	1122587	RIGHT HAND SIDE CAMERA	$555.00	$0.00
0	9306848	TRIANGLE REFLECTIVE FLARES (3)	$90.00	$0.00
		-----SWEEPER ENGINE-------		
0	1121383	BLOCK HEATER	$465.00	$0.00
0	1120838	PREMIUM RADIATOR/HEATER HOSES	$295.00	$0.00
0	1127329	COLD WEATHER START AIDE	$575.00	$0.00
0	1087562	ENGINE PRE-CLEANER	$440.00	$0.00
0	1087675	BATTERY DISCONNECT SWITCH	$195.00	$0.00
0	1089774	MAGNETIC DRAIN PLUG	$170.00	$0.00
0	1120874	ENGINE COOLANT FILTER	$525.00	$0.00

MODEL: ECOINFUSED PELICAN NP 55KW
EFFECTIVE DATE: 01/01/2019
SUPERCEDES ALL PREVIOUS PRICE LISTS
DEALER PRICE LIST (U.S. DOLLARS)

QUANTITY	PART NUMBER	MODEL DESCRIPTION	2019 LIST PRICE	2019 EXTENDED
		------TIRES/WHEELS--------		
0	1101068	SPARE DRIVE WHEEL PAINTED GREY	$675.00	$0.00
0	1101069	SPARE GUIDE WHEEL PAINTED GREY	$615.00	$0.00
0	1101669	SPARE DRIVE WHEEL PAINTED GREY & TIRE (16 PLY)	$1,215.00	$0.00
0	1120585	SPARE GUIDE WHEEL PAINTED GREY & TIRE (16 PLY)	$980.00	$0.00
		----------TOOLS----------		
0	1036150	HYDRANT WRENCH	$100.00	$0.00
0	1049145	LUG WRENCH	$395.00	$0.00
0	1089549	RIGHT HAND LOCKABLE TOOLBOX W/HOSE BASKET W/O WASHDOWN SYSTEM	$1,070.00	$0.00
0	1121064	LEFT HAND LOCKABLE TOOL BOX	$1,070.00	$0.00
0	1090342	TOOL KIT (NO TOOL BOX)	$650.00	$0.00
0	1090584	MECHANICAL JACK RATCHET	$1,500.00	$0.00
		----------PAINT----------		
1	4810001	STANDARD WHITE	$0.00	$0.00
0	4811018	RAL 1018 ZINC YELLOW	$525.00	$0.00
0	4811023	RAL 1023 TRAFFIC YELLOW	$525.00	$0.00
0	4811037	RAL 1037 SUN YELLOW	$525.00	$0.00
0	4813020	RAL 3020 TRAFFIC RED	$525.00	$0.00
0	SPECIAL	PAINT SWEEPER ANY OTHER RAL COLOR	1285.00	$0.00
0	SPECIAL	WHEELS PAINTED SAME COLOR AS BODY	650.00	$0.00
0	SPECIAL	PAINT SWEEPER NON RAL COLOR	3890.00	$0.00
0	1118326	CUSTOM COLOR BODY PANELS	$0.00	$0.00
		-------FREIGHT RATES-------		
0	FRT-101-001	SELF SHIPPING DOCK CHARGE	$595.00	$0.00
0	FRT-101-002	FREIGHT-IL,WI,IA,IN,MI,MN,KY	$1,310.00	$0.00
0	FRT-101-003	FREIGHT-TN,WV,PA,NY	$2,850.00	$0.00
0	FRT-101-004	FREIGHT-NH,VT,ME	$3,595.00	$0.00
0	FRT-101-005	FREIGHT-NEW YORK CITY	$4,110.00	$0.00
0	FRT-101-006	FREIGHT-ND,SD,NE,OK,KS,AR,AL,MO	$2,715.00	$0.00
0	FRT-101-007	FREIGHT-AZ,UT	$5,445.00	$0.00
0	FRT-101-008	FREIGHT-CA,NV,ID,OR,WA	$6,355.00	$0.00
0	FRT-101-009	FREIGHT- CHICAGO/MILWAUKEE	$900.00	$0.00
0	FRT-101-010	FREIGHT-FL,LA,TX,NM,CO,WY,MT	$4,145.00	$0.00
0	FRT-101-011	FREIGHT-OH,ST.LOUIS METRO	$1,530.00	$0.00
0	FRT-101-012	FREIGHT,MS,GA,SC,NC,VA,MD	$3,130.00	$0.00
0	FRT-101-013	FREIGHT - RI,DE,CT,NJ,MA	$2,740.00	$0.00
0	FRT-101-014	FREIGHT - LAREDO, TX	$6,700.00	$0.00
0	FRT-101-015	SPECIALIZED TRANSPORT EQUIPMENT	$1,030.00	$0.00
		--------WARRANTY----------		
0	EW-NP-NA-2PL	PELICAN NP 2ND YEAR PARTS/LABOR	$3,430.00	$0.00
0	EW-NP-NA-3PL	PELICAN NP 3RD YEAR PARTS/LABOR	$5,040.00	$0.00
0	EW-NP-NA-4PL	PELCIAN NP 4TH YEAR PARTS/LABOR	$8,260.00	$0.00
0	EW-NP-NA-5PL	PELICAN NP 5TH YEAR PARTS/LABOR	$11,640.00	$0.00
			SUB TOTAL	**$0.00**
		-----DISCOUNTS-----		
0	DISC-101-ADDL	ADDITIONAL DISCOUNT	$0.00	$0.00
0	DISC-101-PROMO	PROMO DISCOUNT	$0.00	$0.00
		SPECIAL RFQ OPTIONS / OTHER DESCRIPTIONS		
			GRAND TOTAL	**$0.00**

MODEL: ROAD WIZARD
EFFECTIVE DATE: 01/01/2019
SUPERCEDES ALL PREVIOUS PRICE LISTS
DEALER PRICE LIST (U.S. DOLLARS)

Purchase Order #	**Ship To Address:**
Order Date:	
Delivery Date Requirment If Any:	**State Penalty Clause If Applicable:**

QUANTITY	PART NUMBER	MODEL DESCRIPTION	2019 LIST PRICE	2019 EXTENDED
0	1117859	**ROAD WIZARD - DUAL (AUTOCAR)**	$183,875	$0.00
		Conveyor squeegee, dual, hydraulically driven side brooms, variable height, right side dumping hopper. sweeper is powder coated from powder coatings chart 2003/N with powder coated gray undercarriage and includes the standard features listed below.		
0	1119865	**ROAD WIZARD - DUAL (M2)**	$183,875	$0.00
		Conveyor squeegee, dual, hydraulically driven side brooms, variable height, right side dumping hopper. sweeper is powder coated from powder coatings chart 2003/N with powder coated gray undercarriage and includes the standard features listed below.		
0	1120036	**ROAD WIZARD - DUAL (IH)**	$183,875	$0.00
		Conveyor squeegee, dual, hydraulically driven side brooms, variable height, right side dumping hopper. sweeper is powder coated from powder coatings chart 2003/N with powder coated gray undercarriage and includes the standard features listed below.		
0	SPECIAL	**ROAD WIZARD - DUAL (PETERBILT)**	$183,875	$0.00
		Conveyor squeegee, dual, hydraulically driven side brooms, variable height, right side dumping hopper. sweeper is powder coated from powder coatings chart 2003/N with powder coated gray undercarriage and includes the standard features listed below.		

CHASSIS

0	1124564	M2 DUAL STEER (2013 EMISSIONS) (NON STOCKED CHASSIS)	CONTACT INSIDE SALES	$0.00
0	1124667	AUTOCAR DUAL STEER LIMITED QTY	CONTACT INSIDE SALES	$0.00
0	1124549	PETERBILT RIGHT HAND STEER (NON STOCKED CHASSIS) SINGLE SPEED REAR AXLE	CONTACT INSIDE SALES	$0.00
0	1124550	PETERBILT DUAL STEER (NON STOCKED CHASSIS) SINGLE SPEED REAR AXLE	CONTACT INSIDE SALES	$0.00
0	1124545	IH DUAL STEER (NON STOCKED CHASSIS)	CONTACT INSIDE SALES	$0.00

CHASSIS MOUNTING CHARGE

0	1119864	M2 - CHASSIS ALTERATIONS	$2,625	$0.00
0	1114649	AUTOCAR - CHASSIS ALTERATIONS	$2,625	$0.00
0	1120180	INTERNATIONAL - CHASSIS ALTERATIONS	$2,625	$0.00
0	1120762	PETERBILT - CHASSIS ALTERATIONS	$2,625	$0.00
0	SPECIAL	CUSTOMER SUPPLIED CHASSIS ALTERATIONS	CONTACT INSIDE SALES	$0.00
0		CUSTOMER SUPPLIED HANDLING CHARGE	$2,845	$0.00

NOTE: Customer Supplied Cassis Requires Both The Chassis Alterations and the Handling Charge

NOTE: A BODY includes the cost of Elgin standard white finish paint. It does not however, include the price of the chassis

NOTE: The chassis being supplied by a customer or dealer must comply completely with all Elgin requirements or the cha

NOTE: For cost of sweeper mounted on any other chassis, consult factory.

NOTE: One year warranty on all Elgin supplied parts and labor. Consult your Elgin dealer for full warranty details.

MODEL: ROAD WIZARD
EFFECTIVE DATE: 01/01/2019
SUPERCEDES ALL PREVIOUS PRICE LISTS
DEALER PRICE LIST (U.S. DOLLARS)
REV # 0 11.28.2018

STANDARD FEATURES

Aux-engine;
Two-stage dry type with restriction indicator (at engine) and precleaner
Broom side, 46 "steel vertical digger 4 or 5 segment
Broom side, hydraulic floating suspension, hydraulic deploy
Broom, main, 34" diameter, 60" wide prefab disposable
Camera, Rear with in-cab monitor
Conveyor chain, hardened with polyurethane sprockets
Conveyor, 11 flight squeegee with rubber edging
Conveyor, lift independent from main broom
Conveyor, three piece replaceable wear plates
Conveyor flush out system
Conveyor rasie in reverse
Conveyor stall alarm
Dirt shoes, heavy duty single row carbide steel (rubber isolated)
Electric backup alarm
Engine, sweeper, diesel, tier 4 FINAL, 74 HP
Hopper inspection door
Hopper, 5.4 cu yd with window and skylight
Hopper up visual audible indicator
Hopper, variable high dump, 10', 5.4 yard
Hose, hydrant fill, 16'8" (5080 mm) with strainer and coupling
Hydraulic oil level gauge w/ external thermomenter and in-cab level light
Lights, automatic backup
Lights, combination tail/stop, separate amber signal
Lights, flood light, one per broom (3)
Manuals, operator and parts
Rear broom cover and anti-carryover wrap
Rear broom spray bar
Rear right hand flood light
Reflectors, set of 2
Sidebroom speed control, external to cab
Sweep resume / raise in reverse
Tactile controls for all sweep functions
Tool storage
Variable speed brooms (external)
Water fill, anti-siphon
Water level indicator in-cab
Water Pump, electric diaphragm
Water tank, molded polyethylene, 360 gallon total nominal capacity

QUANTITY	PART NUMBER	MODEL DESCRIPTION	2019 LIST PRICE	2019 EXTENDED
		-----ADDITIONAL MANUALS----		
0	0701680	ROAD WIZARD OPERATORS MANUAL	$55.00	$0.00
0	0702460	ROAD WIZARD SERVICE MANUAL	$95.00	$0.00
0	0702240	ROAD WIZARD PARTS BOOK	$95.00	$0.00
0	0704072	CUMMINS OPERATORS & MAINTENANCE MANUAL	$135.00	$0.00
0	0704073	CUMMINS TROUBLESHOOTING MANUAL	$180.00	$0.00
		--------ALARMS----------		
0	1117644	ECCO SA940 SMART ALARM (ILO of STD)	$290.00	$0.00
0	1101528	LATCHING ELEVATOR REVERSE AND ALARM	$410.00	$0.00
0	1104970	HOPPER UP CONSTANT ALARM	$375.00	$0.00
0	1104705	HOPPER FULL INDICATOR	$815.00	$0.00
		-------AUTO LUBE----------		
0	1101559	MIDWEST AUTO LUBE - SWEEPER ONLY	$5,160.00	$0.00
		----------BROOMS---------		
0	1035616	DOUBLE WRAP MAIN BROOM	$470.00	$0.00
0	1035617	POLY/WIRE WAFER MAIN BROOM	$550.00	$0.00
0	1058156	STRIP MAIN BROOM (MILWAUKEE)	$665.00	$0.00
0	1058158	STRIP MAIN BROOM (URB)	$460.00	$0.00
0	1077151	URB STRIP MAIN BROOM W/CENTER SWEEP MANDREL	$460.00	$0.00
0	1095046	ALUMINUM SIDE BROOM SEGMENTS - BLUE STEEL	$340.00	$0.00
0	1096691	DEDUCT MAIN BROOM & CORE	-$278.40	$0.00
		--------DECALS----------		
0	1101151	RED LOG/SWOOSH - ROAD WIZARD	$0.00	$0.00
0	1101152	WHITE LOGO/SWOOSH - ROAD WIZARD	$0.00	$0.00
0	1101037	SLOW MOVING VEHICLE SIGN	$165.00	$0.00
0	1122929	SHIP DECALS AND SWOOSH LOOSE IN HOPPER	$0.00	$0.00
		----------GAUGES----------		
0	1119940	IN-CAB AUXILIARY ENGINE AIR RESTRICTION GAUGE	$800.00	$0.00
0	1101379	BROOM HOUR METERS	$395.00	$0.00
0	1111656	HYDRAULIC OIL TEMP DISPLAY (IN CAB)	$315.00	$0.00
		----------HOPPER----------		
0	1110020	HOPPER INTERIOR LIGHT	$810.00	$0.00
0	1104350	LIFELINER HOPPER SYSTEM W/WARRANTY	$5,665.00	$0.00
0	SPECIAL	STAINLESS STEEL HOPPER	$11,135.00	$0.00

MODEL: ROAD WIZARD
EFFECTIVE DATE: 01/01/2019
SUPERCEDES ALL PREVIOUS PRICE LISTS
DEALER PRICE LIST (U.S. DOLLARS)
REV # 0 11.28.2018

QUANTITY	PART NUMBER	MODEL DESCRIPTION	2019 LIST PRICE	2019 EXTENDED
		---------LIGHTS----------		
0	1103553	PACKAGE 1 : SINGLE REAR/SINGLE HOPPER BEACON; LED WITH GUARD	$2,020.00	$0.00
0	1103533	PACKAGE 2 : DUAL REAR/SINGLE HOPPER BEACON; LED WITH GUARD	$2,760.00	$0.00
0	1125926	PACKAGE 3 : DUAL REAR/SINGLE HOPPER BEACON; LED WITH GUARD & LED ARROWSTICK	$4,320.00	$0.00
0	1104618	PACKAGE 4 : SINGLE REAR/SINGLE HOPPER MOUNT AND GUARD - W/O BEACONS	$1,650.00	$0.00
0	1104619	PACKAGE 5 : DUAL REAR/SINGLE HOPPER MOUNT AND GUARD - W/O BEACONS	$2,045.00	$0.00
0	1102735	LED STOP/TAIL/TURN/REAR ID/CLEARANCE LIGHTS	$370.00	$0.00
0	1125927	REAR MOUNTED LED ARROWSTICK	$1,785.00	$0.00
0	1102736	(2) REAR LOW MOUNTED OVAL AMBER LED FLASHERS	$480.00	$0.00
0	1103898	(2) REAR HIGH MOUNTED OVAL AMBER LED FLASHERS	$595.00	$0.00
0	1104481	ARROWBOARD - REAR	$2,120.00	$0.00
0	1114836	(3) LED WORK LIGHTS (1 EACH SIDE BROOM, 1 ON MAINBROOM)	$520.00	$0.00
0	1114837	(4) LED WORK LIGHTS (1 EACH SIDE BROOM, 2 ON MAINBROOM)	$840.00	$0.00
		----------PAINT----------		
0	4810001	PAINT SWEEPER STANDARD WHITE	$0.00	$0.00
0	4811018	PAINT SWEEPER YELLOW RAL 1018	$525.00	$0.00
0	4811023	PAINT SWEEPER YELLOW RAL 1023	$525.00	$0.00
0	4811037	PAINT SWEEPER YELLOW RAL 1037	$525.00	$0.00
0	4813020	PAINT SWEEPER TRAFFIC RED RAL 3020	$525.00	$0.00
0	SPECIAL	PAINT SWEEPER ANY OTHER RAL COLOR	1285.00	$0.00
0	SPECIAL	PAINT SWEEPER NON RAL COLOR	3890.00	$0.00
0	1069927	ANTI GRAFFITI COATING	$3,860.00	$0.00
		-------PM10 OPTIONS-------		
0	1115479	PM10 COMPLIANT (RULE 1186)	$3,210.00	$0.00
		----------SAFETY----------		
0	1104991	REMOVE REAR CAMERA	$0.00	$0.00
0	1095548	LEFT HAND SIDE CAMERA	$610.00	$0.00
0	9306848	TRIANGLE REFLECTIVE FLARES (3)	$90.00	$0.00
		-------SWEEP COMPONTENTS--		
0	1100656	SIDE BROOM TILT - RIGHT	$995.00	$0.00
0	1100660	SIDE BROOM TILT - LEFT	$995.00	$0.00
0	1117070	SIDE BROOM TILT W/INDICATOR - RIGHT	$1,060.00	$0.00
0	1117071	SIDE BROOM TILT W/INDICATOR - LEFT	$1,060.00	$0.00
0	1101385	RUBBER MOUNTED CARBIDE DRAG SHOES TWO-ROW (ILO STD)	$810.00	$0.00
0	1102732	RUBBER DRAG-SHOES (ILO STD)	$130.00	$0.00
0	1104238	BORON DRAG SHOES	$140.00	$0.00
0	1117430	IN-CAB VARIABLE SPEED ELEVATOR/CONVEYOR **(MUST ORDER 1103612 SIDE BROOM REVERSE)**	$3,415.00	$0.00
0	1103612	IN-CAB SIDEBROOM SPEED CONTROLS, REVERSING	$2,095.00	$0.00
0	1114619	RUBBER BELT CONVEYOR (ILO STANDARD SQUEEGEE)	$0.00	$0.00
0	1106049	HEAVY DUTY LOWER ROLLER **(MUST SELECT RUBBER BELT CONVEYOR OPTION)**	$1,050.00	$0.00
0	1116316	LOWER CONVEYOR DEFLECTOR **(MUST SELECT RUBBER BELT CONVEYOR OPTION)**	$545.00	$0.00
		-------SWEEPER ENGINE-----		
0	1120322	AUXILIARY ENGINE BATTERY DISCONNECT SWITCH	$530.00	$0.00
0	6063004	EXTRA KEY	$50.00	$0.00
0	1102752	SYKLONE PRE CLEANER	$670.00	$0.00
0	1119563	BLOCK HEATER	$465.00	$0.00
		-----TOOLS/TOOLBOXES------		
0	1053426	TOOL KIT	$775.00	$0.00
0	1057687	TOOL BOX W/TOOLS	$750.00	$0.00
0	1036150	HYDRANT WRENCH	$100.00	$0.00

EFFECTIVE DATE: 01/01/2019
SUPERCEDES ALL PREVIOUS PRICE LISTS
DEALER PRICE LIST (U.S. DOLLARS)
REV # 0 11.28.2018

QUANTITY	PART NUMBER	MODEL DESCRIPTION	2019 LIST PRICE	2019 EXTENDED
		--------WATER SYSTEM------		
0	1032484	25' WATER FILL HOSE (ILO 16' 8")	$205.00	$0.00
0	1121010	AIR PURGE FOR WATER SYSTEM	$390.00	$0.00
0	1114604	WATER SIDEBROOM FUNCTION CONTROL (ILO MANUAL) **(USE WITHOUT EXTENDED SIDEBROOM REACH)**	$515.00	$0.00
0	1121611	WATER SIDEBROOM FUNCTION CONTROL (ILO MANUAL) **(USE WITH EXTENEDED SIDEBROOM REACH)**	$515.00	$0.00
		-----M2 CHASSIS OPTIONS-----		
0	0704005	M2 PARTS BOOK	$410.00	$0.00
0	0704006	M2 OPERATOR BOOK	$55.00	$0.00
0	0704007	M2 SERVICE MANUAL	$335.00	$0.00
0	1071235	FUEL CAP SAFETY LOCK	$230.00	$0.00
0	1075400	AM/FM/CD RADIO	$935.00	$0.00
0	1080756	FENDER MOUNTED MIRROR-LEFT HAND	$575.00	$0.00
0	1109607	12" CONVEX MIRRORS (IL0 STD 8")	$335.00	$0.00
0	1081188	SPARE CHASSIS KEY	$50.00	$0.00
0	1081365	IN CAB AIR FILTER RESTRICTION INDICATOR	$875.00	$0.00
0	1121035	(2) AIR CLOTH HI-BACK SEATS	$2,060.00	$0.00
0	1121036	(1) AIR CLOTH HI-BACK SEAT	$1,065.00	$0.00
0	1120505	SPARE TIRE & WHEEL, BALANCED	$1,390.00	$0.00
0	1081909	SINGLE ARM REST - VINYL **(ONLY W/AIR RIDE SEATS)**	$380.00	$0.00
0	1081910	DUAL ARM REST - VINYL **(ONLY W/AIR RIDE SEATS)**	$715.00	$0.00
0	1081911	SINGLE ARM REST - CLOTH **(ONLY W/AIR RIDE SEATS)**	$380.00	$0.00
0	1081912	DUAL ARM REST - CLOTH **(ONLY W/AIR RIDE SEATS)**	$715.00	$0.00
0	1081956	DAYTIME RUNNING LIGHTS	$1,110.00	$0.00
0	1090653	DUAL AIR HORNS	$1,640.00	$0.00
0	1101560	MIDWEST AUTOLUBE - SWEEPER/TRUCK	$7,365.00	$0.00
0	1101567	2 1/2 LB. FIRE EXTINGUISHER	$225.00	$0.00
0	1101568	5 LB. FIRE EXTINGUISHER	$255.00	$0.00
0	4820001	CAB STANDARD WHITE	$0.00	$0.00
0	1063734	M2 (IN STOCK) CAB SPECIAL COLOR	$3,955.00	$0.00
0	1108053	FULL WIDTH FRONT SPRAY BAR	$765.00	$0.00
0	1120361	EXTENDED REACH RIGHT HAND SIDEBROOM	$1,410.00	$0.00
0	1120782	EXTENDED REACH RIGHT AND LEFT HAND SIDEBROOMS	$1,980.00	$0.00
		-----NAVISTAR CHASSIS OPTIONS-----		
0	4820001	CAB STANDARD WHITE	$0.00	$0.00
0	1063731	NAV CAB PAINTED SPECIAL COLOR	$3,805.00	$0.00
0	1086733	LEFT HAND FENDER MOUNTED MIRROR	$530.00	$0.00
0	1101568	5 LB. FIRE EXTINGUISHER	$255.00	$0.00
0	1091761	EXTRA KEY	$65.00	$0.00
0	1091770	(2) ELECTRIC & (1) AIR HORN	$1,960.00	$0.00
0	1097641	NATIONAL AIR RIDE SEAT - PASSENGER SIDE - VINYL	$2,435.00	$0.00
0	1097642	NATIONAL AIR RIDE SEAT-PASSENGER SIDE- VINYL W/ARM REST	$2,600.00	$0.00
0	1097643	NATIONAL AIR RIDE SEAT-PASSENGER SIDE - CLOTH	$2,305.00	$0.00
0	1097644	NATIONAL AIR RIDE SEAT-PASSENGER SIDE- CLOTH W/ARM REST	$2,450.00	$0.00
0	1097645	NATIONAL AIR RIDE SEAT - DRIVER SIDE - VINYL	$2,165.00	$0.00
0	1097646	NATIONAL AIR RIDE SEAT - DRIVER SIDE - VINYL W/ARM REST	$2,305.00	$0.00
0	1097647	NATIONAL AIR RIDE SEAT - DRIVER SIDE - CLOTH	$2,305.00	$0.00
0	1097648	NATIONAL AIR RIDE SEAT - DRIVER SIDE - CLOTH W/ARM REST	$2,645.00	$0.00
0	1099317	(1) ELECTRIC HORN	$435.00	$0.00
0	1091822	AM/FM/CD RADIO	$935.00	$0.00
0	1101567	2 1/2 LB. FIRE EXTINGUISHER	$225.00	$0.00
0	1117611	FULL WIDTH FRONT SPRAY BAR	$1,070.00	$0.00
0	1120361	EXTENDED REACH RIGHT HAND SIDEBROOM	$1,410.00	$0.00
0	1120782	EXTENDED REACH RIGHT AND LEFT HAND SIDEBROOMS	$1,980.00	$0.00

EFFECTIVE DATE: 01/01/2019
SUPERCEDES ALL PREVIOUS PRICE LISTS
DEALER PRICE LIST (U.S. DOLLARS)
REV # 0 11.28.2018

QUANTITY	PART NUMBER	MODEL DESCRIPTION	2019 LIST PRICE	2019 EXTENDED
		----AUTOCAR XPERT CHASSIS OPTIONS----		
0	1107220	2 BATTERIES, 31 ECL, 12V, 1900CCA	$675.00	$0.00
0	1107230	AUTO AIR DRAIN VALVE	$885.00	$0.00
0	1107232	BATTERY DISCONNECT	$1,640.00	$0.00
0	1107236	DUAL UNDERCAB AIR HORN	$1,390.00	$0.00
0	1107238	ISRI HT914 HIGH BACK, AIR RIDE, RH	$2,180.00	$0.00
0	1107239	ISRI HT914 HIGH BACK, AIR RIDE, LH	$2,180.00	$0.00
0	1107243	IN CAB AIR RESTRICTOR	$570.00	$0.00
0	1108945	AM/FM RADIO WITH CD	$935.00	$0.00
0	1109244	EXTRA KEY	$120.00	$0.00
0	1120374	2 1/2 LB. FIRE EXTINGUISHER	$225.00	$0.00
0	1120375	5 LB. FIRE EXTINGUISHER	$255.00	$0.00
0	1116212	2014 AUTOCAR SERVICE MANUAL 2010 EMISSIONS- CD	$690.00	$0.00
0	1109605	EXTENDED REACH RIGHT HAND SIDEBROOM	$1,410.00	$0.00
0	1105519	EXTENDED REACH RIGHT AND LEFT HAND SIDEBROOMS	$1,980.00	$0.00
		---------WARRANTY---------		
0	EW-ME-NA-2PL	ROAD WIZARD 2ND YEAR PARTS/LABOR	$2,860.00	$0.00
0	EW-ME-NA-3PL	ROAD WIZARD 3RD YEAR PARTS/LABOR	$5,405.00	$0.00
0	EW-ME-NA-4PL	ROAD WIZARD 4TH YEAR PARTS/LABOR	$7,650.00	$0.00
0	EW-ME-NA-5PL	ROAD WIZARD 5TH YEAR PARTS/LABOR	$9,820.00	$0.00
		------FREIGHT RATES------		
0	FRT-116-001	SELF SHIPPING DOCK CHARGE	$595.00	$0.00
0	FRT-116-002	FREIGHT-IL,WI,IA,IN,MI,MN,KY	$1,310.00	$0.00
0	FRT-116-003	FREIGHT-TN,WV,PA,NY	$2,850.00	$0.00
0	FRT-116-004	FREIGHT-NH,VT,ME	$3,595.00	$0.00
0	FRT-116-005	FREIGHT-NEW YORK CITY	$4,110.00	$0.00
0	FRT-116-006	FREIGHT-ND,SD,NE,OK,KS,AR,AL,MO	$2,715.00	$0.00
0	FRT-116-007	FREIGHT-AZ,UT	$5,445.00	$0.00
0	FRT-116-008	FREIGHT-CA,NV,ID,OR,WA	$6,355.00	$0.00
0	FRT-116-009	FREIGHT- CHICAGO/MILWAUKEE	$900.00	$0.00
0	FRT-116-010	FREIGHT-FL,LA,TX,NM,CO,WY,MT	$4,145.00	$0.00
0	FRT-116-011	FREIGHT-OH,ST.LOUIS METRO	$1,530.00	$0.00
0	FRT-116-012	FREIGHT,MS,GA,SC,NC,VA,MD	$3,130.00	$0.00
0	FRT-116-013	FREIGHT - RI,DE,CT,NJ,MA	$2,740.00	$0.00
0	FRT-116-014	FREIGHT - LAREDO, TX	$6,700.00	$0.00
0	FRT-116-015	SPECIALIZED TRANSPORT EQUIPMENT	$1,030.00	$0.00
			SUB TOTAL	**$0.00**
		-----DISCOUNTS-----		
0	DISC-116-ADDL	ADDITIONAL DISCOUNT	$0.00	$0.00
0	DISC-116-PROMO	PROMO DISCOUNT	$0.00	$0.00

SPECIAL RFQ OPTIONS / OTHER DESCRIPTIONS

GRAND TOTAL	**$0.00**

MODEL: WATERLESS EAGLE (TIER 4F)
EFFECTIVE DATE: 01/01/2019
SUPERCEDES ALL PREVIOUS PRICE LISTS
DEALER PRICE LIST (U.S. DOLLARS)

Purchase Order #	**Ship To Address:**
Order Date:	
Delivery Date Requirment If Any:	**State Penalty Clause If Applicable:**

QUANTITY	PART NUMBER	MODEL DESCRIPTION	2019 LIST PRICE	2019 EXTENDED
0	1123960	**WATERLESS EAGLE - DUAL - TIER 4F 74hp AUX FOR M2**	$222,250	$0.00
0	1123107	**WATERLESS EAGLE - DUAL - TIER 4F 74hp AUX FOR PETERBILT**	$222,250	$0.00
0		Tier 4F engine, hydraulically driven left and right side brooms and variable height, right side dumping, 4.5 cu. yd. hopper, sweeper is powder coated from powder coatings chart 2003/N with powder coated gray undercarriage and includes the standard features listed below.		

CHASSIS

0	SPECIAL	M2 DUAL STEER	CONTACT INSIDE SALES	$0.00
0	SPECIAL	PETERBILT DUAL STEER	CONTACT INSIDE SALES	$0.00
0	SPECIAL	AUTOCAR XPERT DUAL STEER	CONTACT INSIDE SALES	$0.00
0	1107354	CANADIAN COMPLIANCE AND DAYTIME RUNNING LIGHTS FOR AUTOCAR CHASSIS	$765	$0.00

CHASSIS MOUNTING CHARGE

0	SPECIAL	M2 DUAL STEER - CHASSIS ALTERATIONS	$2,625	$0.00
0	SPECIAL	AUTOCAR - CHASSIS ALTERATIONS	$2,625	$0.00
0	SPECIAL	CUSTOMER SUPPLIED CHASSIS ALTERATIONS	CONTACT INSIDE SALES	$0.00
0		CUSTOMER SUPPLIED HANDLING CHARGE	$2,845	$0.00

NOTE: Customer Supplied Cassis Requires Both The Chassis Alterations and the Handling Charge

1	4820001	PAINT CAB STANDARD WHITE	N/C	$0.00
1	4810001	PAINT SWEEPER STANDARD WHITE	N/C	$0.00

NOTE: A BODY includes the cost of Elgin standard white finish paint. It does not however, include the pric
NOTE: The chassis being supplied by a customer or dealer **must** comply completely with all Elgin require
NOTE: For cost of sweeper mounted on any other chassis, consult factory.
NOTE: One year warranty on all Elgin supplied parts and labor. Consult your Elgin dealer for full warranty

STANDARD FEATURES

Air conditioning
Air cleaner, dry type with safety element and restriction indicator:
truck & sweeper engines
Alternator, 120 amp, sweeper
Alternator, truck 130 amp, (UD) 160 amp (autocar)
Auxiliary engine:
John Deere 4045TF290, in-line 4 cylinder
Horsepower: 74 HP (55 kW) at 2400 RPM
Displacement: 276 cu. in. (4.5 L)
Axle, rear, two-speed
Back-up alarm, electric
Battery, maintenance free, two
Brakes, full air
Broom, main air suspension, cab-controlled
Broom, main, down pressure gauge
Broom, main, double wrap
Camera, Rear with in-cab monitor
Conveyor, flushing system
Conveyor, lower roller washout
Dust Skirts
Engine, block heater, chassis
Engine, hour meter, sweeper
Fresh air ventilator/heater/defroster
Fuel tank, 50 gallon
Fugitive dust control filter with in-cab cleaning
Fugitive dust control fan
Hopper inspection door
Hose, hydrant fill, 16'8" (5080 mm) with strainer and coupling
Lights, automatic backup
Lights, 2 combination, tail/stop lights
Lights, flood light, one per broom
Lights, headlights, 2 dual rectangular
Light, water level
Manuals, operator and parts
Mirrors, West Coast type with 8" diameter convex, both sides
PM-10 compliant water system
Signals, self-canceling directional with hazard switch
Sun visors
Tachometer, engine, truck and sweeper
Rocker switch controls for all sweep hydraulic functions
Transmission, Allison, standard with oil cooler
Water spray, anti-siphon fill
Water tank, molded polyethylene, 315 gallon total nominal ca
Wheels, dual rear with tubeless radial tires
Windshield washer
Windshield wipers, two-speed, intermittent feature

MODEL: WATERLESS EAGLE (TIER 4F)
EFFECTIVE DATE: 03/09/2019
SUPERCEDES ALL PREVIOUS PRICE LISTS
DEALER PRICE LIST (U.S. DOLLARS)

QUANTITY	PART NUMBER	MODEL DESCRIPTION	2019 LIST PRICE	2019 EXTENDED
		----------ALARMS---------		
0	1035625	CONVEYOR STALL ALARM	$735.00	$0.00
0	1121056	ECCO SMART ALARM	$265.00	$0.00
0	1122745	BACK UP ALARM - PRECO	$285.00	$0.00
0	1115188	MAIN BROOM HOUR INDICATOR	$420.00	$0.00
		----------AUX ENGINE------		
0	1123582	BATTERY DISCONNECT SWITCH AUXILIARY ENGINE	$530.00	$0.00
		---------AUTO LUBE--------		
0	1080479	MIDWEST AUTOLUBE - SWEEPER ONLY	$7,365.00	$0.00
		---------BROOMS----------		
0	1084918	CARBIDE DIRT SHOES	$865.00	$0.00
		---------DECALS----------		
0	1048642	SLOW MOVING VEHICLE SIGN	$165.00	$0.00
0	1078556	RED LOGO/SWOOSH - EAGLE WATERLESS	N/C	$0.00
0	1078557	WHITE LOGO/SWOOSH - EAGLE WATERLESS	N/C	$0.00
0	1122929	SHIP DECALS AND SWOOSH LOOSE IN HOPPER	N/C	$0.00
		----------LIGHTS----------		
0	1055272	STROBE LIGHT	$375.00	$0.00
0	1070369	(2) REAR 7" ALTERNATING FLASHERS	$740.00	$0.00
0	1070639	LED/STOP/TAIL/REAR TURN LIGHT	$665.00	$0.00
		------LIFELINER----------		
0	1085062	LIFELINER HOPPER SYSTEM W/WARRANTY	$4,715.00	$0.00
0	1122304	LIFELINER HOPPER - EXTENDED DOOR	$5,705.00	$0.00
		----------PAINT----------		
0	4811018	PAINT SWEEPER ZINC YELLOW RAL 1018	$525.00	$0.00
0	4811023	PAINT SWEEPER TRAFFIC YELLOW RAL 1023	$525.00	$0.00
0	4811037	PAINT SWEEPER SUN YELLOW RAL 1037	$525.00	$0.00
0	4813020	PAINT SWEEPER TRAFFIC RED RAL 3020	$525.00	$0.00
0	SPECIAL	PAINT SWEEPER ANY OTHER RAL COLOR	$1,285.00	$0.00
0	SPECIAL	PAINT SWEEPER NON RAL COLOR	$3,890.00	$0.00
		---------SAFETY----------		
0	9306848	TRIANGLE REFLECTIVE FLARES (3)	$90.00	$0.00
0	1035641	REFLECTORS, SET OF 6	$140.00	$0.00
0	1094513	REMOVE REAR CAMERA	N/C	$0.00
		-----MANUALS----		
0	702224	EAGLE WATERLESS PARTS BOOK	$95.00	$0.00
0	701485	EAGLE WATERLESS OPERATORS MANUAL	$55.00	$0.00
0	702125	EAGLE WATERLESS SERVICE MANUAL	$95.00	$0.00

MODEL: WATERLESS EAGLE (TIER 4F)
EFFECTIVE DATE: 03/09/2019
SUPERCEDES ALL PREVIOUS PRICE LISTS
DEALER PRICE LIST (U.S. DOLLARS)

QUANTITY	PART NUMBER	MODEL DESCRIPTION	2019 LIST PRICE	2019 EXTENDED
		-----SWEEP COMPONENTS-----		
0	1042725	HYDRAULIC TANK MAGNET	$210.00	$0.00
0	1044103	HEAVY DUTY LOWER CONVEYOR ROLLER	$1,050.00	$0.00
0	1061886	HYDRAULIC OIL LEVEL GAUGE W/THERMOMETER	$195.00	$0.00
0	1081694	RETURN SWEEP AFTER TRANSPORT	$1,070.00	$0.00
0	1086158	EXTENDED HOPPER DOOR	$990.00	$0.00
0	1087300	FAN SOUND DEFLECTOR	$915.00	$0.00
		--------TOOLS----------		
0	1053426	TOOL KIT	$775.00	$0.00
0	1057687	TOOL BOX W/TOOLS	$750.00	$0.00
0	1036150	HYDRANT WRENCH	$100.00	$0.00
		---------WATER----------		
0	1032484	25' WATER FILL HOSE (ILO 16' 8")	$205.00	$0.00
0	1081950	WATER FILL GAUGE	$635.00	$0.00
		--------WARRANTY----------		
0	EW-MEWL-NA-2PL	WATERLESS EAGLE 2ND YEAR PARTS/LABOR	$3,120.00	$0.00
0	EW-MEWL-NA-3PL	WATERLESS EAGLE 3RD YEAR PARTS/LABOR	$5,870.00	$0.00
0	EW-MEWL-NA-4PL	WATERLESS EAGLE 4TH YEAR PARTS/LABOR	$8,325.00	$0.00
0	EW-MEWL-NA-5PL	WATERLESS EAGLE 5TH YEAR PARTS/LABOR	$10,600.00	$0.00
		------FREIGHT RATES------		
0	FRT-113-001	SELF SHIPPING DOCK CHARGE	$595.00	$0.00
0	FRT-113-002	FREIGHT-IL,WI,IA,IN,MI,MN,KY	$1,310.00	$0.00
0	FRT-113-003	FREIGHT-TN,WV,PA,NY	$2,850.00	$0.00
0	FRT-113-004	FREIGHT-NH,VT,ME	$3,595.00	$0.00
0	FRT-113-005	FREIGHT-NEW YORK CITY	$4,110.00	$0.00
0	FRT-113-006	FREIGHT-ND,SD,NE,OK,KS,AR,AL,MO	$2,715.00	$0.00
0	FRT-113-007	FREIGHT-AZ,UT	$5,445.00	$0.00
0	FRT-113-008	FREIGHT-CA,NV,ID,OR,WA	$6,355.00	$0.00
0	FRT-113-009	FREIGHT- CHICAGO/MILWAUKEE	$900.00	$0.00
0	FRT-113-010	FREIGHT-FL,LA,TX,NM,CO,WY,MT	$4,145.00	$0.00
0	FRT-113-011	FREIGHT-OH,ST.LOUIS METRO	$1,530.00	$0.00
0	FRT-113-012	FREIGHT - MS,GA,SC,NC,VA,MD	$3,130.00	$0.00
0	FRT-113-013	FREIGHT- RI,DE,CT,NJ,MA	$2,740.00	$0.00
0	FRT-113-014	FREIGHT- LAREDO, TX	$6,700.00	$0.00
0	FRT-113-015	SPECIALIZED TRANSPORT EQUIPMENT	$1,030.00	$0.00
			SUB TOTAL	**$0.00**
		-----DISCOUNTS-----		
0	DISC-113-ADDL	ADDITIONAL DISCOUNT	$0.00	$0.00

SPECIAL RFQ OPTIONS / OTHER DESCRIPTIONS

GRAND TOTAL	**$0.00**

MODEL: WATERLESS PELICAN P T4F 99HP
EFFECTIVE DATE: 1/01/2019
SUPERCEDES ALL PREVIOUS PRICE LISTS
LIST PRICE LIST (U.S. DOLLARS)

Purchase Order #	**Ship To Address:**
Order Date:	
Delivery Date Requirement If Any:	**State Penalty Clause If Applicable:**

QUANTITY	PART NUMBER	MODEL DESCRIPTION	2019 LIST PRICE	2019 EXTENDED
		TIER 4F ENGINE		
0	1125164	**WATERLESS PELICAN P DUAL TIER 4F 99HP**	$248,750	$0.00
		Dust control skirts, dust extraction fan and filtered air exhaust, with dual hydraulically driven gutter brooms, Tier 4F 99HP JD 4045TF emission diesel engine, hydrostatic drive and steering, chassis and wheels powder coated standard white and including the standard features below.		

NOTE: One year warranty on all Elgin supplied parts and labor. Consult your Elgin dealer for full warranty details.

STANDARD FEATURES

Air cleaner,dry type w/safety element and restriction indicator
Air conditioner
Alternator, 120 amp
Anti Siphon water fill
Automatic engine shutdown (oil pressure/engine temperature)
Automatic pickup in reverse
B20 biodiesel compatible
Back up alarm, electric
Battery, maintenance free
Brakes, power
Broom, main, hydraulically suspended
Broom, main, in cab pressure control
Broom, main, prefab, disposable
Broom, side broom, hydraulically suspended
Broom, side broom, in cab pressure control
Bumper pads, front jack
Coolant recovery system
Doors, see through glass, prop-able
Electronic Throttle
Engine, hour meter
Gauges & Warning lights:
  engine oil temperature
  engine oil pressure
  fuel level
  speedometer & odometer w/trip set
Fenders, over front wheels
Flushing system for hopper/conveyor
Fuel tank, 35 gallons
Fuel Water separator with indicator light
Heater, pressurizer with filtered air, defroster
Hose, hydrant fill, 16' 8" with coupling
Light, spotlight, adjustable, one per side broom
Lights, 2 combination, tail/stop lights
Lights, headlights, multiple beam
Lights, low water light
Low Hydraulic Warning
Lower roller wash out.
Main broom controls in cab
Manuals, operator and parts
Mirror, inside rear view
Mirrors, outside, front mounted 6" fish eyes
Mirrors, outside, front post mounted, west coast type, one each side
Parking brake with interlock
Rear Camera & in cab monitor
Return to sweep feature
Seat Belts (both sides for dual)
Seats, extra wide cordura suspension seats with arm rests
Signals, self-canceling directional with hazard switch
Sprung guide wheel, heavy duty
Steering wheel, tilt and telescoping
Sun visors
Tachometer, diesel engine
Tires, tubeless radials
Tow loops, four
Water tank, Aluminum:
  35 gallon total nominal capacity
Wheels, dual guide
Wheels painted grey
Window, opening front opera
Windshield washer
Windshield wipers with intermittent setting
Windshield, tinted

MODEL: WATERLESS PELICAN P T4F 99HP
EFFECTIVE DATE: 1/01/2019
SUPERCEDES ALL PREVIOUS PRICE LISTS
LIST PRICE LIST (U.S. DOLLARS)

QUANTITY	PART NUMBER	MODEL DESCRIPTION	2019 LIST PRICE	2019 EXTENDED
		----------ALARMS----------		
0	1089339	SMART BACK UP ALARM	$290.00	$0.00
0	1089728	GROTE LOUD MOUTH BACKUP ALARM	$290.00	$0.00
		------AUTO LUBE----------		
0	1096746	MIDWEST AUTO LUBE - DUAL	$6,405.00	$0.00
0	1097099	VOGEL AUTO LUBE - DUAL	$7,245.00	$0.00
0	1119952	MIDWEST AUTO LUBE - DUAL USE W/GREASABLE DIRT SHOES	$7,365.00	$0.00
		------AUTO SHUTDOWN-------		
0	1087563	HYDRAULIC LEVEL SHUTDOWN	$185.00	$0.00
0	1089429	HYDRAULIC LEVEL & TEMPERATURE SHUTDOWN	$365.00	$0.00
0	1120654	HYDRAULIC TEMPERATURE SHUTDOWN	$185.00	$0.00
		---------BROOMS----------		
0	1091361	STRIP BROOM CENTER SWEEP	$920.00	$0.00
		----CONVEYOR/ELEVATOR-----		
0	1087545	CONVEYOR STALL ALARM	$735.00	$0.00
0	1087575	LOWER ROLLER DEFLECTOR	$510.00	$0.00
		----------GAUGES----------		
0	1087539	MAINBROOM ODOMETER/HOUR METER	$395.00	$0.00
0	1088858	CHARGE PRESSURE GAUGE-LOOSE	$315.00	$0.00
0	1120827	IN CAB AIR RESTRICTION GAUGE	$380.00	$0.00
		-----MANUALS----		
0	0702262	PELICAN P PARTS BOOK	$95.00	$0.00
0	0701466	PELICAN P OPERATORS MANUAL	$55.00	$0.00
0	0702454	PELICAN P SERVICE	$95.00	$0.00
0	0704058	JOHN DERRE POWERTECH TIER 4 SERVICE MANUAL	$230.00	$0.00
0	0704056	JOHN DERRE 4045 TIER 4 OPERATOR MANUAL	$55.00	$0.00
0	0704057	JOHN DERRE 4045 TIER 4 PARTS BOOK	$110.00	$0.00
		-----LIFELINER SYSTEM / EPOXY COATING-----		
0	1096226	LIFELINER HOPPER SYSTEM W/WARRANTY	$4,070.00	$0.00
		---------LIGHTS----------		
0	1121376	DUAL REAR FLOODS	$470.00	$0.00
0	1087873	LED CLEARANCE LIGHTS	$270.00	$0.00
0	1093229	(2) REAR FLOODS & BACKUP LIGHTS	$485.00	$0.00
0	1094481	RIGHT HAND SEAL BEAM WORK LIGHT	$150.00	$0.00
0	1094482	RIGHT HAND & LEFT HAND SEAL BEAM WORK LIGHTS	$265.00	$0.00
0	1101214	(2) CAB FORWARD FACING FLOOD LIGHTS WITH LIGHT BAR	$440.00	$0.00
0	1101215	(2) CAB FORWARD FACING FLOOD LIGHTS WITHOUT LIGHT BAR	$730.00	$0.00
0	1101273	LED STOP/TAIL/TURN **NOT COMPATIABLE WITH LIGHT PACKAGES 3 & 4**	$370.00	$0.00
0	1114404	(2) CAB FORWARD FACING LED FLOOD LIGHTS WITH LIGHT BAR	$1,130.00	$0.00
0	1114405	(2) CAB FORWARD FACING LED FLOOD LIGHTS WITHOUT LIGHT BAR	$1,455.00	$0.00
0	1120317	LED ALTERNATING & FLASHING LIGHTS IN BATTERY COVER	$1,190.00	$0.00

MODEL: WATERLESS PELICAN P T4F 99HP
EFFECTIVE DATE: 1/01/2019
SUPERCEDES ALL PREVIOUS PRICE LISTS
LIST PRICE LIST (U.S. DOLLARS)

QUANTITY	PART NUMBER	MODEL DESCRIPTION	2019 LIST PRICE	2019 EXTENDED
		---------LIGHTS CONTINUED----------		
0	1124937	PACKAGE 1: ONE LED STROBE W/ GUARD	$980.00	$0.00
0	1124938	PACKAGE 2: TWO LED STROBES W/ GUARD	$1,715.00	$0.00
0	1124939	PACKAGE 3: PACKAGE 2+ FOUR ROOF MOUNTED SWEEP FLASHERS **LED STOP/TAIL/TURN MUST BE ORDERED WITH THIS PACKAGE**	$1,935.00	$0.00
0	1125797	PACKAGE 4: PACKAGE 3 + LED FRONT ID LIGHTS AND REAR LED ARROW STICK **LED STOP/TAIL/TURN MUST BE ORDERED WITH THIS PACKAGE**	$3,080.00	$0.00
0	1124941	PACKAGE 5: FRONT LIGHT MOUNTING RAIL ONLY	$680.00	$0.00
0	1124942	PACKAGE 6: REAR LIGHT MOUNTING RAIL AND WIRE/MOUNT/GUARD FOR 1 LIGHT	$750.00	$0.00
0	1124943	PACKAGE 7: REAR LIGHT MOUNTING RAIL AND WIRE/MOUNT/GUARD FOR 2 LIGHTS	$1,250.00	$0.00
0	1125798	PACKAGE 8: LED ARROWSTICK	$1,670.00	$0.00
		------PELICAN OPTIONS-----		
0	1087540	LICENSE PLATE HOLDER - FRONT & REAR	$215.00	$0.00
0	1087541	LOCKING ENGINE COMPARTMENT	$230.00	$0.00
0	1087605	CARBIDE DIRT SHOES	$1,120.00	$0.00
0	1126939	O-GREASEABLE DIRT SHOES,BORON	$100.00	$0.00
0	1087981	RED LOGO/SWOOSH	$0.00	$0.00
1	1087982	WHITE LOGO/SWOOSH	$0.00	$0.00
0	1122929	SHIP DECALS AND SWOOSH LOOSE IN HOPPER	$0.00	$0.00
0	1123319	SLIDING REAR WINDOW	$915.00	$0.00
0	1123322	STEEL RIGHT HAND DOOR W/ SLIDING WINDOW	$3,250.00	$0.00
0	1123320	STEEL RIGHT & LEFT HAND DOOR W/ SLIDING WINDOW	$4,650.00	$0.00
0	1123323	STEEL RIGHT HAND DOOR	$1,875.00	$0.00
0	1123321	STEEL RIGHT & LEFT HAND DOOR	$3,740.00	$0.00
0	1124181	HEAVY DUTY LIMB GUARD RIGHT HAND ONLY	$1,275.00	$0.00
0	1124182	HEAVY DUTY LIMB GUARD LEFT HAND ONLY	$1,235.00	$0.00
0	1100256	RADIO INSTALL PACKAGE W/O RADIO	$390.00	$0.00
0	1101017	LEFT HAND AND RIGHT HAND "WEST COAST" STYLE MIRRORS HEATED & MOTORIZED. **(DOES NOT HEAT OR MOTORIZE HOPPER CONVEX MIRRORS)**	$1,285.00	$0.00
0	1101066	ASHTRAY & LIGHTER	$245.00	$0.00
0	1101244	AM/FM RADIO WITH CD & 2 MAP LIGHTS	$600.00	$0.00
0	1106586	INDUSTRIAL SWEEPING APPLICATION (POWDER) PACKAGE	$0.00	$0.00
0	1112079	BORON DIRT SHOES	$430.00	$0.00
0	1106698	GREASABLE CARBIDE DIRT SHOES	$1,360.00	$0.00
0	SPECIAL	ADDITIONAL IGNITION KEY	$50.00	$0.00
		-------REFLECTORS---------		
0	1126078	REFLECTOR (ARMOURED) , SET OF 6	$160.00	$0.00
		------SIDE BROOM TILT-----		
0	1089502	LEFT HAND SIDEBROOM TILT WITH INDICATOR	$1,945.00	$0.00
0	1089503	RIGHT HAND SIDEBROOM TILT WITH INDICATOR	$1,945.00	$0.00
		----------SEATS----------		
0	1087555	RIGHT HAND BOSTROM AIR RIDE MID BACK CLOTH	$1,015.00	$0.00
0	1087556	LEFT HAND BOSTROM AIR RIDE MID BACK CLOTH	$1,015.00	$0.00
0	1087677	ALL VINYL STD SEAT	$35.00	$0.00
0	1088301	RIGHT HAND BOSTROM AIR RIDE HI BACK CLOTH	$1,015.00	$0.00
0	1088302	LEFT HAND BOSTROM AIR RIDE HI BACK CLOTH	$1,015.00	$0.00
0	1089316	RIGHT HAND BOSTROM AIR RIDE MID BACK -VINYL	$1,015.00	$0.00
0	1089317	LEFT HAND BOSTROM AIR RIDE MID BACK - VINYL	$1,015.00	$0.00
0	1089510	LEFT HAND MAGNUM STANDARD SEAT	$890.00	$0.00
0	1091686	LEFT HAND BOSTROM MID-BACK CLOTH	$1,690.00	$0.00
0	1093157	HEADREST FOR MAGNUM STD SEAT	$425.00	$0.00

MODEL: WATERLESS PELICAN P T4F 99HP
EFFECTIVE DATE: 1/01/2019
SUPERCEDES ALL PREVIOUS PRICE LISTS
LIST PRICE LIST (U.S. DOLLARS)

QUANTITY	PART NUMBER	MODEL DESCRIPTION	2019 LIST PRICE	2019 EXTENDED
		---------SAFETY----------		
0	1087559	(1) 2 1/2 LB. FIRE EXTINGUISHER	$225.00	$0.00
0	1088661	(2) 2 1/2 LB. FIRE EXTINGUISHER	$445.00	$0.00
0	1092020	REMOVE REAR CAMERA	$0.00	$0.00
0	1101067	LEFT HAND SIDE CAMERA	$555.00	$0.00
0	1122587	RIGHT HAND SIDE CAMERA	$555.00	$0.00
0	SPECIAL	(3) TRIANGLE REFLECTIVE FLARES	$90.00	$0.00
		-----SWEEPER ENGINE-------		
0	1087675	BATTERY DISCONNECT SWITCH	$195.00	$0.00
0	1089774	MAGNETIC DRAIN PLUG	$170.00	$0.00
0	1121051	PREMIUM RADIATOR/HEATER HOSES	$1,190.00	$0.00
0	1121383	ENGINE COOLANT BLOCK HEATER	$465.00	$0.00
0	1127329	COLD WEATHER START AIDE	$575.00	$0.00
0	1121306	ENGINE COOLANT FILTER	$525.00	$0.00
		------TIRES/WHEELS--------		
0	1101068	SPARE DRIVE WHEEL PAINTED GREY	$675.00	$0.00
0	1103546	SPARE GUIDE WHEEL PAINTED GREY	$1,410.00	$0.00
0	1101669	SPARE DRIVE WHEEL PAINTED GREY & GOODYEAR TIRE (16 PLY)	$1,215.00	$0.00
0	1120585	SPARE GUIDE WHEEL PAINTED GREY & GOODYEAR TIRE (16 PLY)	$980.00	$0.00
		----------TOOLS----------		
0	1036150	HYDRANT WRENCH	$100.00	$0.00
0	1049145	LUG WRENCH	$395.00	$0.00
0	1089549	RIGHT HAND LOCKABLE TOOLBOX W/HOSE BASKET	$1,070.00	$0.00
0	1090342	TOOL KIT (NO TOOL BOX)	$650.00	$0.00
0	1090584	MECHANICAL JACK RATCHET	$1,500.00	$0.00
0	1121064	LEFT HAND LOCKABLE TOOL BOX	$1,070.00	$0.00
		----------PAINT----------		
0	4810001	STANDARD WHITE	$0.00	$0.00
0	4811018	RAL 1018 ZINC YELLOW	$525.00	$0.00
0	4811023	RAL 1023 TRAFFIC YELLOW	$525.00	$0.00
0	4811037	RAL 1037 SUN YELLOW	$525.00	$0.00
0	4813020	RAL 3020 TRAFFIC RED	$525.00	$0.00
0	SPECIAL	PAINT SWEEPER ANY OTHER RAL COLOR	$1,285.00	$0.00
0	SPECIAL	WHEELS PAINTED SAME COLOR AS BODY	$650.00	$0.00
0	SPECIAL	PAINT SWEEPER NON RAL COLOR	$3,890.00	$0.00
0	1118326	CUSTOM COLOR BODY PANELS	$0.00	$0.00

MODEL: WATERLESS PELICAN P T4F 99HP
EFFECTIVE DATE: 1/01/2019
SUPERCEDES ALL PREVIOUS PRICE LISTS
LIST PRICE LIST (U.S. DOLLARS)

QUANTITY	PART NUMBER	MODEL DESCRIPTION	2019 LIST PRICE	2019 EXTENDED
		--------WARRANTY----------		
0	EW-NR-NA-2PL	PELICAN NP 2ND YEAR PARTS/LABOR	$3,740.00	$0.00
0	EW-NR-NA-3PL	PELICAN NP 3RD YEAR PARTS/LABOR	$6,495.00	$0.00
0	EW-NR-NA-4PL	PELCIAN NP 4TH YEAR PARTS/LABOR	$11,745.00	$0.00
0	EW-NR-NA-5PL	PELICAN NP 5TH YEAR PARTS/LABOR	$16,525.00	$0.00
		-------FREIGHT RATES-------		
0	FRT-104-001	SELF SHIPPING DOCK CHARGE	$595.00	$0.00
0	FRT-104-002	FREIGHT-IL,WI,IA,IN,MI,MN,KY	$1,310.00	$0.00
0	FRT-104-003	FREIGHT-TN,WV,PA,NY	$2,850.00	$0.00
0	FRT-104-004	FREIGHT-NH,VT,ME	$3,595.00	$0.00
0	FRT-104-005	FREIGHT-NEW YORK CITY	$4,110.00	$0.00
0	FRT-104-006	FREIGHT-ND,SD,NE,OK,KS,AR,AL,MO	$2,715.00	$0.00
0	FRT-104-007	FREIGHT-AZ,UT	$5,445.00	$0.00
0	FRT-104-008	FREIGHT-CA,NV,ID,OR,WA	$6,355.00	$0.00
0	FRT-104-009	FREIGHT- CHICAGO/MILWAUKEE	$900.00	$0.00
0	FRT-104-010	FREIGHT-FL,LA,TX,NM,CO,WY,MT	$4,145.00	$0.00
0	FRT-104-011	FREIGHT-OH,ST.LOUIS METRO	$1,530.00	$0.00
0	FRT-104-012	FREIGHT,MS,GA,SC,NC,VA,MD	$3,130.00	$0.00
0	FRT-104-013	FREIGHT - RI,DE,CT,NJ,MA	$2,740.00	$0.00
0	FRT-104-014	FREIGHT - LAREDO, TX	$6,700.00	$0.00
0	FRT-104-015	SPECIALIZED TRANSPORT EQUIPMENT	$1,030.00	$0.00
			SUB TOTAL	**$0.00**
		-----DISCOUNTS-----		
0	DISC-104-ADDL	ADDITIONAL DISCOUNT	$0.00	$0.00

SPECIAL RFQ OPTIONS / OTHER DESCRIPTIONS

MODEL: WHIRLWIND TIER 4F
EFFECTIVE DATE: 01/01/2019
SUPERCEDES ALL PREVIOUS PRICE LISTS
DEALER PRICE LIST (U.S. DOLLARS)

Purchase Order #	Ship To Address:
Order Date:	
Delivery Date Requirment If Any:	State Penalty Clause If Applicable:

QUANTITY	PART NUMBER	MODEL DESCRIPTION	2019 LIST PRICE	2019 EXTENDED
0	1121024	**WHIRLWIND MV DUAL 28" SIDEBROOM (M2)**	$173,375	$0.00
0	1121025	**WHIRLWIND MV SINGLE 28" SIDEBROOM (M2)**	$159,250	$0.00
0		Tier 4F emissions, 8 cu. yd. hopper, 28 in. (711 mm) trailing arm side broom on right-hand side (SINGLE) or both right and left hand sides (DUAL), ergonomic control console, sweeper is powder coated from powder coatings chart 2003/N with powder coated gray undercarriage and includes the standard features listed below.		
0	1121026	**WHIRLWIND MV DUAL 28" SIDEBROOM (AUTOCAR)**	$173,375	$0.00
0	1121027	**WHIRLWIND MV SINGLE 28" SIDEBROOM (AUTOCAR)**	$159,250	$0.00
0		Tier 4F emissions, 8 cu. yd. hopper, 28 in. (711 mm) trailing arm side broom on right-hand side (SINGLE) or both right and left hand sides (DUAL), ergonomic control console, sweeper is powder coated from powder coatings chart 2003/N with powder coated gray undercarriage and includes the standard features listed below.		
0	1121028	**WHIRLWIND MV DUAL 28" SIDEBROOM (IH)**	$173,375	$0.00
0	1121029	**WHIRLWIND MV SINGLE 28" SIDEBROOM (IH)**	$159,250	$0.00
0		Tier 4F emissions, 8 cu. yd. hopper, 28 in. (711 mm) trailing arm side broom on right-hand side (SINGLE) or both right and left hand sides (DUAL), ergonomic control console, sweeper is powder coated from powder coatings chart 2003/N with powder coated gray undercarriage and includes the standard features listed below.		
0	1121030	**WHIRLWIND MV DUAL 28" SIDEBROOM (PETERBILT)**	$173,375	$0.00
0	1121031	**WHIRLWIND MV SINGLE 28" SIDEBROOM (PETERBILT)**	$159,250	$0.00
0		Tier 4F emissions, 8 cu. yd. hopper, 28 in. (711 mm) trailing arm side broom on right-hand side (SINGLE) or both right and left hand sides (DUAL), ergonomic control console, sweeper is powder coated from powder coatings chart 2003/N with powder coated gray undercarriage and includes the standard features listed below.		
0	1121267	**WHIRLWIND MV DUAL 36" SIDEBROOM (M2)**	$173,375	$0.00
0	1121016	**WHIRLWIND MV SINGLE 36" SIDEBROOM (M2)**	$159,250	$0.00
0		Tier 4F emissions, 8 cu. yd. hopper, 36 in. (711 mm) trailing arm side broom on right-hand side (SINGLE) or both right and left hand sides (DUAL), ergonomic control console, sweeper is powder coated from powder coatings chart 2003/N with powder coated gray undercarriage and includes the standard features listed below.		
0	1121017	**WHIRLWIND MV DUAL 36" SIDEBROOM (AUTOCAR)**	$173,375	$0.00
0	1121018	**WHIRLWIND MV SINGLE 36" SIDEBROOM (AUTOCAR)**	$159,250	$0.00
		Tier 4F emissions, 8 cu. yd. hopper, 36 in. (711 mm) trailing arm side broom on right-hand side (SINGLE) or both right and left hand sides (DUAL), ergonomic control console, sweeper is powder coated from powder coatings chart 2003/N with powder coated gray undercarriage and includes the standard features listed below.		
0	1121020	**WHIRLWIND MV DUAL 36" SIDEBROOM (IH)**	$173,375	$0.00
0	1121021	**WHIRLWIND MV SINGLE 36" SIDEBROOM (IH)**	$159,250	$0.00
		Tier 4F emissions, 8 cu. yd. hopper, 36 in. (711 mm) trailing arm side broom on right-hand side (SINGLE) or both right and left hand sides (DUAL), ergonomic control console, sweeper is powder coated from powder coatings chart 2003/N with powder coated gray undercarriage and includes the standard features listed below.		
0	1121022	**WHIRLWIND MV DUAL 36" SIDEBROOM (PETERBILT)**	$173,375	$0.00
0	1121023	**WHIRLWIND MV SINGLE 36" SIDEBROOM (PETERBILT)**	$159,250	$0.00
		Tier 4F emissions, 8 cu. yd. hopper, 36 in. (711 mm) trailing arm side broom on right-hand side (SINGLE) or both right and left hand sides (DUAL), ergonomic control console, sweeper is powder coated from powder coatings chart 2003/N with powder coated gray undercarriage and includes the standard features listed below.		
0	SPECIAL	**WHIRLWIND MV DUAL 28" SIDEBROOM 10 YD HOPPER**	Consult Factory	$0.00
0		Tier 4F emissions, 10 cu. yard hopper, 28 in. (711 mm) trailing arm side brooms on both right and left hand sides, ergonomic control console, sweeper is powder coated from powder coatings chart 2003/N with powder coated gray undercarriage and includes the standard features listed below.		
0	SPECIAL	**WHIRLWIND MV DUAL 36" SIDEBROOM 10 YD HOPPER**	Consult Factory	$0.00
0		Tier 4F emissions, 10 cu. yard hopper, 36 in. (711 mm) trailing arm side brooms on both right and left hand sides, ergonomic control console, sweeper is powder coated from powder coatings chart 2003/N with powder coated gray undercarriage and includes the standard features listed below.		

MODEL: WHIRLWIND TIER 4F
EFFECTIVE DATE: 01/01/2019
SUPERCEDES ALL PREVIOUS PRICE LISTS
DEALER PRICE LIST (U.S. DOLLARS)

QUANTITY	PART NUMBER	MODEL DESCRIPTION	2019 LIST PRICE	2019 EXTENDED
		CHASSIS		
0	1124757	AUTOCAR DUAL STEER (36" SB) (2017 EMMISIONS) (NON STOCKED)	Consult Factory	$0.00
0	SPECIAL	AUTOCAR DUAL STEER (28" SB) (2017 EMMISIONS) (NON STOCKED)	Consult Factory	$0.00
0	SPECIAL	CANADIAN COMPLIANCE AND DAYTIME RUNNING LIGHTS FOR AUTOCAR CHASSIS	$775	$0.00
0	1124546	IH M7 (V8) DUAL STEER (36" SB) 2017 EMISSIONS (NO FRONT TOW HOOKS, SEATS ARE VINYL) LIMITED QTY	Consult Factory	$0.00
0	1121858	M2 DUAL STEER (36" SB) (2013 EMISSIONS)	Consult Factory	$0.00
0	1124557	PETERBILT RIGHT HAND STEER 28" SB	Consult Factory	$0.00
0	1124558	PETERBILT DUAL STEER 28" SB	Consult Factory	$0.00
0	1124555	PETERBILT RIGHT HAND STEER 36" SB	Consult Factory	$0.00
0	1124556	PETERBILT DUAL STEER 36" SB	Consult Factory	$0.00

*****A 10 yard hopper requires a Chassis with extended wheelbase to accommodate larger hopper. Consult factory for further det**

*****For International or Freightliner M2 with 28" sidebrooms; Chassis mounitng/altreations is a special, please consult inside sal**

******FOR A SKID MOUNT UNIT, PLEASE CONSULT FACTORY FOR FUTHER DETAILS*****

		CHASSIS MOUNTING CHARGE		
0	1122439	M2 172" WB (36" DUAL SIDEBROOMS)	$2,625.00	$0.00
0	SPECIAL	M2 172" WB (36" SINGLE SIDEBROOM)	$2,625.00	$0.00
0	1122573	AUTOCAR XPERT 164" WB (36" DUAL SIDEBROOMS)	$2,625.00	$0.00
0	SPECIAL	AUTOCAR XPERT 164" WB (36" SINGLE SIDEBROOM)	$2,625.00	$0.00
0	SPECIAL	AUTOCAR XPERT 144" WB (28" DUAL SIDEBROOMS) *SPECIAL ORDER*	$2,625.00	$0.00
0	SPECIAL	AUTOCAR XPERT 144" WB (28" SINGLE SIDEBROOM) *SPECIAL ORDER*	$2,625.00	$0.00
0	SPECIAL	IH M7 (V8) 177" WB (36" DUAL SIDEBROOMS)	$2,625.00	$0.00
0	SPECIAL	IH M7 (V8) 177" WB (36" SINGLE SIDEBROOM)	$2,625.00	$0.00
0	1122579	PETERBILT 36" SIDEBROOMS	$2,625.00	$0.00
0	1122551	PETERBILT 28" SIDEBROOMS	$2,625.00	$0.00
0	SPECIAL	CUSTOMER SUPPLIED HANDLING CHARGE	$2,845.00	$0.00
0	SPECIAL	CUSTOMER SUPPLIED CHASSIS ALTERATIONS	CONTACT INSIDE SALES	$0.00

NOTE: Customer Supplied Chassis requires both the Chassis Alterations and the Handling Charge

1	4820001	PAINT CAB STANDARD WHITE	N/C	$0.00
1	4810001	PAINT SWEEPER STANDARD WHITE	N/C	$0.00
0	SPECIAL	SWEEPER COLOR OTHER THAN STANDARD WHITE	SEE INSIDE SALES	$0.00

1 NOTE: A BODY includes the cost of Elgin standard white finish paint. It does not however, include the price of the chassis.
1 NOTE: The chassis being supplied by a customer or dealer must comply completely with all Elgin requirements or the chass
1 NOTE: For cost of sweeper mounted on any other chassis, consult factory.
1 NOTE: One year warranty on all Elgin supplied parts and labor. Consult your Elgin dealer for full warranty details.

STANDARD FEATURES

Auxiliary Engine:
- John Deere 4045T, 4 cylinder Turbocharged diesel
- Alternator, 120 amp.
- Horsepower: 74 HP (55 kW) at 2400 RPM
- Displacement: 276 cu. in. (4.5 L)

Auto Shutdown Auxiliary Engine
Backup alarm, electric
Camera, Rear View
Debris Hopper Volumetric Capacity 8.0 yd3 (6.0 m3)
Drive: Fluid coupler and 5-groove banded power beltwith adjustable idler pulley
Doors, fiberglass access doors provide easy service and maintenance on auxiliary engine, hydraulic and electrical system
Electronic Throttle
Fuel tank, 50 gallon (189 L)
Fuel water separator for auxiliary engine
Full Load Indicator Weight actuated with in-cab warning light
Hose, hydrant fill, 16208" (5080 mm) with coupling
Hopper rear door, hydraulically opened/closed and locked/unlocked with external controls
Hydraulic oil cooler
In cab hopper dump
Individual water switches
LED clearance lights
Manuals, operator and parts
Memory Sweep : Sweep resume feature
Rocker switches in central console gauges:
- Tachometer, hour meter, oil pressure,
- fuel, voltmeter, coolant temperature,
- spray water level gauge, hopper up,
- hopper rear door open, full load indicator

Sidebroom work lights
Spray Nozzles (Quick Disconnect Type) :
- (7) inside each suction nozzle
- (4) at extension broom
- (3) at each side broom (36" broom)

Water Tank Construction :
- Dual polyethylene, removable

Water System Capacity 335 gal. (1268 L)

MODEL: WHIRLWIND TIER 4F
EFFECTIVE DATE: 01/01/2019
SUPERCEDES ALL PREVIOUS PRICE LISTS
DEALER PRICE LIST (U.S. DOLLARS)

QUANTITY	PART NUMBER	MODEL DESCRIPTION	2019 LIST PRICE	2019 EXTENDED
		----------ALARM---------		
0	1048703	BACKUP ALARM - SMART	$440.00	$0.00
0	1122644	BACK UP ALARM - PRECO	$285.00	$0.00
		---------AUTO LUBE--------		
0	1121851	AUTO LUBE - SWEEPER ONLY	$6,095.00	$0.00
		------AUX ENGINE----------		
0	1120793	TURBO II PRECLEANER	$510.00	$0.00
0	1121842	SY-KLONE AUXILIARY PRECLEANER	$625.00	$0.00
0	1078204	AUXILIARY AIR FILTER RESTRICTION INDICATOR LIGHT	$655.00	$0.00
0	1121730	COLD WEATHER STARTING KIT	$500.00	$0.00
0	1121729	BLOCK HEATER	$465.00	$0.00
0	6063004	ADDITIONAL IGNITION KEY	$50.00	$0.00
0	1120393	AUXILIARY HYDRAULIC PUMP W/ IN-CAB DUMP	$1,415.00	$0.00
0	1121823	IDLE DOWN/NO WATER - SINGLE SIDEBROOM	$625.00	$0.00
0	1121824	IDLE DOWN/NO WATER - DUAL SIDEBROOMS	$625.00	$0.00
		----------DECALS---------		
1	1090208	RED LOGO-WHIRLWIND	$0.00	$0.00
0	1090209	WHITE LOGO-WHIRLWIND	$0.00	$0.00
0	1122929	SHIP DECALS AND SWOOSH LOOSE IN HOPPER	$0.00	$0.00
		-----MANUALS-----		
0	0701675	WHIRLWIND MV-3000 OPERATORS	$55.00	$0.00
0	0702247	WHIRLWIND MV-3000 PARTS	$95.00	$0.00
0	0702448	WHIRLWIND MV-3000 SERVICE	$95.00	$0.00
0	0704046	JOHN DEERE OPERATORS	$55.00	$0.00
0	0704047	JOHN DEERE PARTS	$100.00	$0.00
0	0704048	JOHN DEERE SERVICE	$190.00	$0.00
		------PM10 COMPLIANT------		
0	1121807	PM-10 (USE W/DUAL 36" SIDEBROOMS)	$3,100.00	$0.00
0	1121916	PM-10 (USE W/SINGLE 36" SIDEBROOMS)	$3,100.00	$0.00
0	1121917	PM-10 (USE W/DUAL 28" SIDEBROOMS)	$3,100.00	$0.00
0	1121918	PM-10 (USE W/SINGLE 28" SIDEBROOMS)	$3,100.00	$0.00
		----------SAFETY----------		
0	1048643	SLOW MOVING VEHICLE SIGN	$165.00	$0.00
0	1121725	UTILITY COVER LIFTER - RIGHT HAND	$2,720.00	$0.00
0	1122071	REMOVE REAR CAMERA	$0.00	$0.00
0	1096442	CAMERA RIGHT HAND SIDE	$750.00	$0.00
0	1095548	CAMERA LEFT HAND SIDE	$610.00	$0.00
0	1117174	CAMERA (2) FRONT (1) REAR	$1,030.00	$0.00
		----SIDEBROOM OPTIONS----		
0	1036814	ALUMINUM SIDEBROOM SEGMENTS (ILO STD EACH)	$430.00	$0.00
0	1121517	VARIABLE SPEED DUAL SIDEBROOMS	$1,315.00	$0.00
0	1121518	VARIABLE SPEED SINGLE SIDEBROOM **(NOT COMPATIBLE WITH DUAL SIDEBROOMS)**	$690.00	$0.00
0	1111175	SIDEBROOM TILT LEFT HAND W/DISPLAY 36"	$1,060.00	$0.00
0	1111176	SIDEBROOM TILT RIGHT HAND W/DISPLAY 36"	$1,060.00	$0.00
0	1121676	SIDEBROOM TILT LEFT HAND 28"	$995.00	$0.00
0	1121677	SIDEBROOM TILT RIGHT HAND 28"	$995.00	$0.00
		------SWEEPER OPTIONS----		
0	1067561	NOZZLE 3RD CASTER WHEEL - SINGLE	$425.00	$0.00
0	1067562	NOZZLE 3RD CASTER WHEEL - DUAL	$795.00	$0.00
0	1121301	AIR PURGE	$435.00	$0.00
0	1120044	AUTO SHUTTER LEFT HAND	$1,295.00	$0.00
0	1120045	AUTO SHUTTER RIGHT HAND	$1,295.00	$0.00
0	1120104	AUTO SHUTTER DUAL	$1,440.00	$0.00

MODEL: WHIRLWIND TIER 4F
EFFECTIVE DATE: 01/01/2019
SUPERCEDES ALL PREVIOUS PRICE LISTS
DEALER PRICE LIST (U.S. DOLLARS)

QUANTITY	PART NUMBER	MODEL DESCRIPTION	2019 LIST PRICE	2019 EXTENDED
		----------8 YARD HOPPER----------		
0	1071234	STAINLESS STEEL HOPPER SCREEN	$1,605.00	$0.00
0	1085864	RIGHT HAND INSPECTION DOOR	$455.00	$0.00
0	1085882	LEFT HAND INSPECTION DOOR	$455.00	$0.00
0	1085883	RIGHT HAND INSPECTION DOOR & STEP	$810.00	$0.00
0	1085886	LEFT HAND INSPECTION DOOR & STEP	$810.00	$0.00
0	1101937	STAINLESS STEEL RIGHT HAND INSPECTION DOOR & STEP	$830.00	$0.00
0	1101938	STAINLESS STEEL LEFT HAND INSPECTION DOOR & STEP	$830.00	$0.00
0	1085887	6" HOPPER DRAIN	$845.00	$0.00
0	1089326	6" HOPPER DRAIN STAINLESS STEEL DOOR	$1,800.00	$0.00
0	1092627	LIFELINER HOPPER SYSTEM W/WARRANTY	$8,175.00	$0.00
0	1122610	STAINLESS STEEL HOPPER W/WARRANTY FOR SINGLE BROOM	$16,800.00	$0.00
0	1124223	STAINLESS STEEL HOPPER W/WARRANTY FOR DUAL BROOMS	$17,295.00	$0.00
0	1122546	STAINLESS STEEL HOPPER W/ 6" HOPPER DRAIN W/WARRANTY FOR DUAL BROOM	$18,040.00	$0.00
0	1124224	STAINLESS STEEL HOPPER W/ 6" HOPPER DRAIN W/WARRANTY FOR SINGLE BROOM	$18,040.00	$0.00
		----------10 YARD HOPPER----------		
0	1071234	STAINLESS STEEL HOPPER SCREEN	$1,605.00	$0.00
0	1085864	RIGHT HAND INSPECTION DOOR	$455.00	$0.00
0	1085882	LEFT HAND INSPECTION DOOR	$455.00	$0.00
0	1085883	RIGHT HAND INSPECTION DOOR & STEP	$810.00	$0.00
0	1085886	LEFT HAND INSPECTION DOOR & STEP	$810.00	$0.00
0	1085887	6" HOPPER DRAIN	$845.00	$0.00
0	1089326	6" HOPPER DRAIN SS DOOR	$1,800.00	$0.00
0	SPECIAL	LIFELINER HOPPER SYSTEM W/WARRANTY	$9,955.00	$0.00
		----------LIGHTS---------		
0	1121132	WIRE/MOUNT HOPPER/REAR	$430.00	$0.00
0	1121133	WIRE/MOUNT HOPPER/REAR W/GUARD	$665.00	$0.00
0	1120559	WIRE/MOUNT (2) HOPPER/REAR W/LED ARROWBOARD (USE W/WANDERING HOSE)	$3,670.00	$0.00
0	1120560	WIRE/MOUNT (2) HOPPER/REAR W/LED ARROWBOARD (USE W/OUT WANDERING HOSE)	$3,670.00	$0.00
0	1121740	WIRE/MOUNT (2) REAR HOPPER (USE W/WANDERING HOSE)	$990.00	$0.00
0	1121741	WIRE/MOUNT (2) REAR HOPPER (USE W/OUT WANDERING HOSE)	$990.00	$0.00
0	1121500	REAR ARROWBOARD LED	$2,735.00	$0.00
0	1121121	HOPPER/REAR LED BEACON / LED ARROWBOARD	$3,055.00	$0.00
0	1121502	WIRE/MOUNT HOPPER/REAR & GUARD WITH LED ARROWBOARD	$3,175.00	$0.00
0	1120887	REAR LED BEACON	$965.00	$0.00
0	1121096	REAR LED BEACON WITH ARROWSTICK	$2,920.00	$0.00
0	1121098	RIGHT & LEFT HOPPER/REAR LED BEACONS (USE W/WANDERING HOSE)	$1,490.00	$0.00
0	1121099	RIGHT & LEFT HOPPER/REAR LED BEACONS (USE W/O WANDERING HOSE)	$1,490.00	$0.00
0	1121813	(4) ALTERNATING FLASHING REAR LED LIGHTS	$1,880.00	$0.00
0	1121752	(2) REAR BUMPER STROBES	$1,145.00	$0.00
0	1121812	(2) ALTERNATING FLASHING LIGHTS, REAR LED LIGHTS	$935.00	$0.00
0	1120427	DUAL REAR LED FLOOD LIGHTS	$640.00	$0.00
0	1120428	SINGLE REAR LED FLOOD LIGHT	$395.00	$0.00
0	1121512	REAR LED ARROWSTICK	$2,345.00	$0.00
0	1120440	(2) HOPPER/REAR BEACONS WITH LED ARROWBOARD (USE W/WANDERING HOSE)	$3,585.00	$0.00
0	1120441	(2) HOPPER/REAR BEACONS WITH LED ARROWBOARD (USE W/O WANDERING HOSE)	$3,585.00	$0.00
0	1120425	LED SIDEBROOM LIGHTS (ILO STANDARD)	$500.00	$0.00
0	1120426	LED RIGHT HAND SIDEBROOM LIGHT	$255.00	$0.00
0	1120429	LED SIDEBROOMS & REAR LED FLOOD LIGHTS	$1,140.00	$0.00
0	1120430	LED SIDEBROOM & REAR RIGHT HAND LED FLOOD LIGHT	$890.00	$0.00

MODEL: WHIRLWIND TIER 4F
EFFECTIVE DATE: 01/01/2019
SUPERCEDES ALL PREVIOUS PRICE LISTS
DEALER PRICE LIST (U.S. DOLLARS)

QUANTITY	PART NUMBER	MODEL DESCRIPTION	2019 LIST PRICE	2019 EXTENDED
		----------PAINT----------		
0	4811018	PAINT SWEEPER ZINC YELLOW RAL 1018	$525.00	$0.00
0	4811023	PAINT SWEEPER TRAFFIC YELLOW RAL 1023	$525.00	$0.00
0	4811037	PAINT SWEEPER SUN YELLOW RAL 1037	$525.00	$0.00
0	4813020	PAINT SWEEPER TRAFFIC RED RAL 3020	$525.00	$0.00
0	SPECIAL	PAINT SWEEPER ANY OTHER RAL COLOR	1285.00	$0.00
0	SPECIAL	PAINT SWEEPER NON RAL COLOR	3890.00	$0.00
		------TOOL BOX/TOOL KIT---		
0	1053426	TOOL KIT	$775.00	$0.00
0	1057687	TOOL BOX W/TOOLS	$750.00	$0.00
		-----WANDERING HOSE-----		
0	1059263	4 FT. ALUMINUM WANDERING HOSE EXTENSION - REAR MOUNT	$795.00	$0.00
0	1063656	(2) 4 FT. ALUMINUM WANDERING HOSE EXTENSIONS - REAR MOUNT	$1,595.00	$0.00
0	1082041	WANDERING HOSE LIGHT DUTY SPRING ASSISTANCE **(8 YD ONLY)**	$3,525.00	$0.00
0	1121789	HYDRAULIC WANDERING HOSE - (USE W/DUAL SIDEBROOMS) **(8 YD ONLY)**	$4,925.00	$0.00
0	1121790	HYDRAULIC WANDERING HOSE - (USE W/SINGLE SIDEBROOM) **(8 YD ONLY)**	$4,925.00	$0.00
0	1121791	HYDRAULIC WANDERING HOSE (USE W/SINGLE SB & FRONT SPRAYBAR) **(8 YD ONLY)**	$4,925.00	$0.00
0	1121792	HYDRAULIC WANDERING HOSE (USE W/DUAL SB & VARIABLE SPEED) **(8 YD ONLY)**	$4,925.00	$0.00
0	1121793	HYDRAULIC WANDERING HOSE (USE SINGLE SB & VARIABLE SPEED) **(8 YD ONLY)**	$4,925.00	$0.00
0	1121794	HYDRAULIC WANDERING HOSE (USE W/SINGLE SB, VARIABLE SPEED & FRONT SPRAYBAR) **(8 YD ONLY)**	$4,925.00	$0.00
		------WATER SYSTEM--------		
0	1032484	25' WATER FILL HOSE (ILO 16' 8")	$205.00	$0.00
0	1036150	HYDRANT WRENCH	$100.00	$0.00
0	1040094	QUICK DISCONNECT WATER FILL	$530.00	$0.00
0	1059209	HOPPER DELUGE	$1,060.00	$0.00
0	1121913	LOW PRESSURE WASHDOWN	$1,265.00	$0.00
0	1121910	HIGH PRESSURE WASHDOWN - HIGH PSI AT LOW RPM	$4,240.00	$0.00
0	1121911	HIGH PRESSURE WASHDOWN (USE W/ PM10) - HIGH PSI AT LOW RPM	$4,120.00	$0.00
0	1121912	HIGH PRESSURE WASHDOWN (USE WITH WAND HOSE) - HIGH PSI AT LOW RPM	$4,240.00	$0.00
0	1120481	HIGH PRESSURE WASHDOWN (USE W/ WANDERING HOSE AND PM10) HIGH PSI AT LOW RPM	$4,240.00	$0.00
0	1091366	HIGH PRESSURE WASHDOWN HOSE REEL	$1,190.00	$0.00
0	1091367	HIGH PRESSURE WASHDOWN HOSE REEL (USE W/ RIGHT HAND INSPECTION DOOR)	$1,190.00	$0.00

QUANTITY	PART NUMBER	MODEL DESCRIPTION	2019 LIST PRICE	2019 EXTENDED
		----M2 CHASSIS OPTIONS----		
0	1063734	CAB PAINT M2	$3,955.00	$0.00
0	1070639	LED/STOP/TAIL/REAR TURN LIGHTS	$665.00	$0.00
0	1075400	AM/FM RADIO WITH CD	$935.00	$0.00
0	1109607	12" CONVEX MIRRORS (IL0 8")	$335.00	$0.00
0	1080756	FENDER MOUNTED MIRROR-LEFT HAND	$575.00	$0.00
0	1081188	EXTRA KEY	$50.00	$0.00
0	1081745	(2) BOSTROM 905 VINYL MIDBACK	$1,905.00	$0.00
0	1081746	(1) BOSTROM 905 VINYL MIDBACK	$935.00	$0.00
0	1081747	(2) BOSTROM 905 CLOTH HI-BACK	$2,105.00	$0.00
0	1081748	BOSTROM 905 CLOTH HI-BACK	$1,090.00	$0.00
0	1081901	SPARE TIRE & WHEEL, BALANCE	$1,305.00	$0.00
0	1081909	SINGLE ARM REST - VINYL **(ONLY W/AIR RIDE SEATS)**	$380.00	$0.00
0	1081910	DUAL ARM REST - VINYL **(ONLY W/AIR RIDE SEATS)**	$715.00	$0.00
0	1081911	SINGLE ARM REST - CLOTH **(ONLY W/AIR RIDE SEATS)**	$380.00	$0.00
0	1081912	DUAL ARM REST - CLOTH **(ONLY W/AIR RIDE SEATS)**	$715.00	$0.00
0	1082931	AIR FILTER RESTRICTION INDICATOR	$1,015.00	$0.00
0	1121758	FRONT SPRAY BAR-SINGLE	$1,055.00	$0.00
0	1121759	FRONT SPRAY BAR-DUAL	$770.00	$0.00
0	1090653	DUAL AIR HORNS	$1,640.00	$0.00
0	1122080	AUTO LUBE SWEEPER/TRUCK	$7,610.00	$0.00
0	1092336	(2) ALUMINUM EXTENSIONS FRONT MOUNTED	$1,395.00	$0.00
0	1121162	WIRE/MOUNT CAB/FRONT ; HOPPER/REAR	$990.00	$0.00
0	1121492	WIRE/MOUNT - CAB/FRONT ; HOPPER/REAR W/GUARD (USE W/AIR HORN)	$1,095.00	$0.00
0	1121163	WIRE/MOUNT - CAB/FRONT ; HOPPER/REAR W/GUARD	$1,470.00	$0.00
0	1121164	LED BEACON CAB/FRONT ; HOPPER/REAR	$2,410.00	$0.00
0	1121494	LED BEACON CAB/FRONT ; HOPPER/REAR (USE W/AIR HORN)	$2,410.00	$0.00
0	1118356	2 1/2 LB. FIRE EXTINGUISHER	$225.00	$0.00
0	1118357	5 LB. FIRE EXTINGUISHER	$240.00	$0.00
0	1121926	FRONT SPRAY BAR (USE W/PM10)	$770.00	$0.00
0	1121736	CAB & (2) REAR BEACONS (USE W/ WANDERING HOSE)	$2,115.00	$0.00
0	1121737	CAB & (2) REAR BEACONS (USE W/WANDERING HOSE & AIR HORN)	$2,115.00	$0.00
0	1121738	CAB & (2) REAR BEACONS (USE W/O WANDERING HOSE)	$2,115.00	$0.00
0	1121739	CAB & (2) REAR BEACONS (USE W/O WANDERING HOSE & AIR HORN)	$2,115.00	$0.00
0	1121901	WIRE/MOUNT - CAB/FRONT ; HOPPER/REAR W/ LED ARROWBOARD	$2,810.00	$0.00
0	1121902	WIRE/MOUNT-CAB/FRONT;HOPPER/REAR W/ LED ARROWBOARD (USE W/AIR HORN)	$2,810.00	$0.00
0	1121903	LED BEACONS CAB/FRONT ; HOPPER/REAR W/ LED ARROWBOARD	$4,010.00	$0.00
0	1121904	LED BEACONS CAB/FRONT ; HOPPER/REAR W/ LED ARROWBOARD (USE W/AIR HORN)	$4,010.00	$0.00
		----PETERBILT CHASSIS OPTIONS----		
0	1121577	SPARE CHASSIS KEY	$140.00	$0.00
0	1121762	FRONT SPRAYBAR (USE W/SINGLE SIDEBROOM)	$1,055.00	$0.00
0	1121763	FRONT SPRAYBAR (USE W/DUAL SIDEBROOMS)	$770.00	$0.00
0	1122901	FRONT SPRAYBAR (USE W/PM-10)	$770.00	$0.00
0	1122155	LED STOP, TAIL, TURN LIGHTS	$665.00	$0.00
0	1123158	2 1/2 LB. FIRE EXTINGUISHER	$225.00	$0.00
0	1123159	5 LB. FIRE EXTINGUISHER	$255.00	$0.00

QUANTITY	PART NUMBER	MODEL DESCRIPTION	2019 LIST PRICE	2019 EXTENDED
		---- INTERNATIONAL CHASSIS OPTIONS----		
0	1117228	2 1/2 LB. FIRE EXTINGUISHER	$225.00	$0.00
0	1117229	5 LB. FIRE EXTINGUISHER	$250.00	$0.00
0	1063731	CAB PAINT	$3,805.00	$0.00
0	1097476	AIR RESTRICTOR GAUGE	$1,015.00	$0.00
0	1070639	LED/STOP/TAIL/REAR TURN LIGHTS	$665.00	$0.00
0	1121758	FRONT SPRAY BAR-SINGLE	$1,055.00	$0.00
0	1121759	FRONT SPRAY BAR-DUAL	$770.00	$0.00
0	1086733	LEFT HAND FENDER MOUNTED MIRROR	$530.00	$0.00
0	1121896	WIRE/MOUNT - CAB/FRONT ; HOPPER/REAR	$990.00	$0.00
0	1121897	LED BEACONS CAB/FRONT ; HOPPER/REAR	$1,945.00	$0.00
0	1121926	FRONT SPRAY BAR (USE W/ PM-10)	$770.00	$0.00
0	1091761	EXTRA KEY	$65.00	$0.00
0	1091770	(2) ELECTRIC & (1) AIR HORN	$1,960.00	$0.00
0	1121177	BEACON CAB/FRONT;(2) HOPPER/REAR LED BEACONS (USE W/ WANDERING HOSE)	$2,710.00	$0.00
0	1121178	BEACON CAB/FRONT;(2) HOPPER/REAR LED BEACONS (USE W/O WANDERING HOSE)	$2,710.00	$0.00
0	1091822	RADIO AM/FM/CD	$935.00	$0.00
0	1092464	4 FT. ALUMINUM WANDERING HOSE EXTENSION - FRONT MOUNT	$980.00	$0.00
0	1092465	(2) 4 FT. ALUMINUM WANDERING HOSE EXTENSION - FRONT MOUNT	$1,395.00	$0.00
0	1097641	NATIONAL AIR RIDE SEAT - PASSENGER SIDE (RIGHT HAND) VINYL	$2,435.00	$0.00
0	1097642	NATIONAL AIR RIDE SEAT- PASSENGER SIDE (RIGHT HAND) VINYL W/ARM REST	$2,600.00	$0.00
0	1097643	NATIONAL AIR RIDE SEAT- PASSENGER SIDE (RIGHT HAND) CLOTH	$2,305.00	$0.00
0	1097644	NATIONAL AIR RIDE SEAT- PASSENGER SIDE (RIGHT HAND) CLOTH W/ARM REST	$2,450.00	$0.00
0	1097645	NATIONAL AIR RIDE SEAT - DRIVER SIDE (LEFT HAND) VINYL	$2,165.00	$0.00
0	1097646	NATIONAL AIR RIDE SEAT - DRIVER SIDE (LEFT HAND) VINYL W/ARM REST	$2,305.00	$0.00
0	1097647	NATIONAL AIR RIDE SEAT - DRIVER SIDE (LEFT HAND) CLOTH	$2,305.00	$0.00
0	1097648	NATIONAL AIR RIDE SEAT - DRIVER SIDE (LEFT HAND) CLOTH W/ARM REST	$2,645.00	$0.00
0	1099317	(1) ELECTRIC HORN	$435.00	$0.00
0	1121891	WIRE/MOUNT CAB/FRONT ; HOPPER/REAR WITH LED ARROWBOARD	$2,810.00	$0.00
0	1121892	LED BEACON CAB/FRONT ; HOPPER/REAR WITH LED ARROWBOARD	$4,010.00	$0.00
		----AUTOCAR XPERT CHASSIS OPTIONS----		
0	1111468	LED/STOP/TAIL/REAR TURN LIGHTS	$665.00	$0.00
0	1107220	2 BATTERIES, 31 ECL, 12V, 1900CCA	$675.00	$0.00
0	1107230	AUTO AIR DRAIN VALVE	$885.00	$0.00
0	1107232	BATTERY DISCONNECT	$1,640.00	$0.00
0	1107236	DUAL UNDERCAB AIR HORN	$1,390.00	$0.00
0	1107238	RIGHT HAND AIR RIDE ISRINGHAUSEN HT914 HIGH BACK	$2,180.00	$0.00
0	1107239	LEFT HAND AIR RIDE ISRINGHAUSEN HT914 HIGH BACK	$2,180.00	$0.00
0	1107243	IN CAB AIR FILTER RESTRICTION INDICATOR	$570.00	$0.00
0	1107244	DAYTIME RUNNING LIGHTS FOR US ONLY	$555.00	$0.00
0	1121172	BEACON CAB/FRONT ; (2) HOPPER/REAR BEACONS (USE W/ANDERING HOSE)	$2,710.00	$0.00
0	1121173	BEACON CAB/FRONT ; (2) HOPPER/REAR BEACONS (USE W/O WANDERING HOSE)	$2,710.00	$0.00
0	1121206	WIRE / MOUNT CAB/FRONT ; HOPPER/REAR	$990.00	$0.00
0	1121207	WIRE / MOUNT CAB/FRONT ; HOPPER/REAR W/GUARD	$1,470.00	$0.00
0	1121208	LED STROBES CAB/FRONT ; HOPPER/REAR	$2,410.00	$0.00
0	1121894	LED BEACONS CAB/FRONT ; HOPPER REAR WITH LED ARROWSTICK	$3,550.00	$0.00
0	1107536	4 FT. ALUMINUM WANDERING HOSE EXTENSION - FRONT MOUNT	$775.00	$0.00
0	1121210	WIRE MOUNT CAB/REAR W/ LED ARROWBOARD	$3,560.00	$0.00
0	1121211	LED STROBE CAB/REAR W/ LED ARROWBOARD	$3,735.00	$0.00
0	1121760	FRONT SPRAY BAR (USE W/SINGLE SIDEBROOM)	$1,055.00	$0.00
0	1121761	FRONT SPRAY BAR (USE W/DUAL SIDEBROOMS)	$770.00	$0.00
0	1122902	FRONT SPRAY BAR (USE W/PM-10)	$1,055.00	$0.00
0	1122050	AUTO LUBE SWEEPER/TRUCK	$7,610.00	$0.00
0	1107546	17" WORK PLATFORM	$3,370.00	$0.00
0	1108945	AM/FM RADIO WITH CD	$935.00	$0.00
0	SPECIAL	EXTRA KEY	125.00	$0.00
0	SPECIAL	SPARE TIRE / WHEEL	1380.00	$0.00
0	1120374	2 1/2 LB. FIRE EXTINGUISHER	$225.00	$0.00
0	1120375	5 LB. FIRE EXTINGUISHER	$255.00	$0.00

DEALER PRICE LIST (U.S. DOLLARS)

QUANTITY	PART NUMBER	MODEL DESCRIPTION	2019 LIST PRICE	2019 EXTENDED
		-------FREIGHT RATES-------		
0	FRT-120-001	SELF SHIPPING DOCK CHARGE	$595.00	$0.00
0	FRT-120-002	FREIGHT-IL,WI,IA,IN,MI,MN,KY	$1,310.00	$0.00
0	FRT-120-003	FREIGHT-TN,WV,PA,NY	$2,850.00	$0.00
0	FRT-120-004	FREIGHT-NH,VT,ME	$3,595.00	$0.00
0	FRT-120-005	FREIGHT-NEW YORK CITY	$4,110.00	$0.00
0	FRT-120-006	FREIGHT-ND,SD,NE,OK,KS,AR,AL,MO	$2,715.00	$0.00
0	FRT-120-007	FREIGHT-AZ,UT	$5,445.00	$0.00
0	FRT-120-008	FREIGHT-CA,NV,ID,OR,WA	$6,355.00	$0.00
0	FRT-120-009	FREIGHT- CHICAGO/MILWAUKEE	$900.00	$0.00
0	FRT-120-010	FREIGHT-FL,LA,TX,NM,CO,WY,MT	$4,145.00	$0.00
0	FRT-120-011	FREIGHT-OH,ST.LOUIS METRO	$1,530.00	$0.00
0	FRT-120-012	FREIGHT,MS,GA,SC,NC,VA,MD	$3,130.00	$0.00
0	FRT-120-013	FREIGHT - RI,DE,CT,NJ,MA	$2,740.00	$0.00
0	FRT-120-014	FREIGHT - LAREDO, TX	$6,700.00	$0.00
0	FRT-120-015	SPECIALIZED TRANSPORT EQUIPMENT	$1,030.00	$0.00
		----------WARRANTY--------		
0	EW-AIR-NA-2PL	WHIRLWIND 2ND YEAR PARTS/LABOR	$2,775.00	$0.00
0	EW-AIR-NA-3PL	WHIRLWIND 3RD YEAR PARTS/LABOR	$4,220.00	$0.00
0	EW-AIR-NA-4PL	WHIRLWIND 4TH YEAR PARTS/LABOR	$6,445.00	$0.00
0	EW-AIR-NA-5PL	WHIRLWIND 5TH YEAR PARTS/LABOR	$8,785.00	$0.00
			SUB TOTAL	**$0.00**
		-----DISCOUNTS-----		
0	DISC-120-ADDL	ADDITIONAL DISCOUNT	$0.00	$0.00
0	DISC-120-PROMO	PROMO DISCOUNT	$0.00	$0.00

SPECIAL RFQ OPTIONS / OTHER DESCRIPTIONS

GRAND TOTAL	**$0.00**

Jan-19	**Spaulding Mfg., Inc. List Pricing**	
2019	MI-DEAL	
	Spaulding Asphalt Heater/reclaimer: Spaulding 1T tow behind	
	Model 1TRS-1 ton hopper capacity trailer	**$17,050.00**
	6000 LB Axle, leaf spring suspension, 235/80/R16E tires and rims,	
	Electric brakes and brake away, pintle eye,	
	diesel or propane burner with automatice temperature control,	
	insulated air jacket hopper, insualted metal top loading doors,	
	rear single unloading door all manual operation, LED lighting	
	Model 2TRS -2 ton hopper capacity trailer	**$17,908.00**
	6000 LB single axle,235/80/R16 Etires, electric brakes w brakeaway,	
	pintle eye, diesel or propane fired burner with automatic temperture	
	insulated air jacket hopper, insulated metal top loading doors	
	rear single unloading door all manual operation, LED lighting	
	Model 3TRS-3 ton hopper capacity trailer	**$21,835.00**
	6000 LB tandem axles, 235/80/R16E tires,electric brakesw/ brakeaway	
	pintle eye, dieselor propane fired burner w/ automatic temperture control	
	insulated air jacket hopper, insulated metal top loading doors	
	rear single unloading door all manual operation, LED lighting	
	Model 4TRS- 4 ton hopper capacity trailer	**$22,605.00**
	7000LB axles, 235/80/R16E tires, electric brakesw/brakeaway	
	pintle eye, diesel or propane fired burner w/ automatic temperture control	
	insulated air jacket hooper, insulated metal top loading doors	
	rear single unloading door all manual operation, LED lighting	
	Model 6TRS-6 ton hopper capacity trailer	**$50,875.00**
	10,000LB axles, 235/75/R17.5tires and rims, electric brakes and brakeaway	
	diesel or propane burners dual, dump hopper with sizzor hoist, top loading	
	hydraulic doors,hydraulic rear unloading door, center duct work	
	top third burner option, pintle eye, LED lighting	
	Options for Spaulding Asphalt Heater/reclaimer	
	HEATING SYSTEMS	
SPPAT-propane,SP DAT -DIESEL	Propane burner system 150,000BTU each burner with automatic temperature control OR DIESEL BURNER 105,000btu	**$980.00**
SP110VOLT	110V electric overnight heat with ground fault protection and safety disconnect	**$2,540.00**
SP220VOLT	220V electric overnight heat with ground fault protection and safety disconnect 3kw	**$2,850.00**
SPAJHCHO	oil jacket hopper for reclaiming AIR jacket that reclaims requires two burners /either system same price	**$4,950.00**
	Brake system - electric is standard and all have brake away	
SPSBSA	Surge brakes on single axle	**$1,350.00**
SPSBTA	Surge brakes on tandem axle	**$1,690.00**
SSPH29	Hitch Extension 29 inches(standard on 3 &4 ton)	**$850.00**
SSPDRC	D- Rings 3/8 with double clevis, 3/8 DOT grade 70 Chain and 3/8 hooks with clips to tow truck(standard)	
SPTRMTH	Spare tire holder mounted on trailer	**$480.00**
SPTRL	Spare tire and rim shipped loose	**$300.00**

SPWC	Wheel Chocks	**$190.00**
	LIGHTING OPTIONS	
ARLEDSL	LED arrow stick front mounted on bracket(self leveling on dump trailers)	**$1,170.00**
SLSSL	strobe light non LED(self leveling on dump trailers) top door mounted	**$420.00**
SLEDSL	LED strobe light top door mount (self level on dump trailers)	**$530.00**
SPMS4M	mini strobes total of 4 (2 rear mounted ,2 midship on trailer frame)	**$625.00**
SPRMLEDL	rear spot lights LED adjustable with separate toggle switch	**$785.00**
	TOOLS AND ACCESSORIES	
SPFHP	platform in front of hopper, with railings Meets OHSA requirement	**$1,150.00**
SP7DTHVM	7 day 24 hour timer, hour meter, volt meter standard on recycler/reclaimer	**$750.00**
SP15GWJ	15 gallon water jug mounted in metal holder for water tanks on compacting tools	**$380.00**
SP2GMSH	holder and 2 gallon metal hand pump solvent sprayer for tools	**$300.00**
SP212VS3T	12vdc sprayer for tools and hopper for release solvent with 5 gallon tank	**$990.00**
SP12GST	solvent tank for dipping shovels in solvent(12 gallon)	**$290.00**
SP5PCTH	5 piece tool holder for brooms, shovels ,lute(tools not included)	**$190.00**
SPPTF20GF	propane torch w/ 20 gallon holder, regulator and pressure gauge 20 ft UL propane hose on bracket	**$860.00**
SPRHRP30	Propane retractable hose reel with 30 ft propane UL hose	**$850.00**
SPBDRWB	Bulldog Vibratory roller , Honda engine , compacts a 850 LBS with hold down basket Weighs 100LBS	**$2,990.00**
SPPCHL	plate or Bulldog Roller compactor hydraulic lift(plate compactor not included)	**$2,690.00**
BCDP15	12vdc marine battery charger (standard on hydraulic dump trailers)	**$490.00**
SPSHTBMP	Tool Box for small hand tools	**$250.00**
SP6PCH	cone holder(holds 6 cones(cones not included)	**$150.00**
20FE	20 LB fire extinguisher in quick release holder and weatherproof inspection tag	**$370.00**
SP30HTT	30 gallon heated tack tank, insulated, auto temp,gravity spigot	**$2,950.00**
SPHESVP	spray system for tack , Honda gas engine with asphalt pump, dead man spray wand and 30 ft of 1/2 inch hose	**$3,100.00**
SPTRHR	emulision retractable hose reel for tack sprayer	**$850.00**
SPCWP	Cold weather package 12vdc FUEL HEATER	**$520.00**
	DISPENSING OPTIONS	
SPHDH T	hydraulic dump hopper with 2 cylinder lift includes,1400 Amp Battery,Audiable back up alarm, hydraulic disconnect switch,300 Amp fuse protection on electric over hydraulic system and charger,15 Amp Marine battery charger, 4 GA color coded wiring, Prop rod on lockable door, on large front tool box behind adjustable hitch with 7 gauge decking under box.	**$4,950.00**
SPSHD B	Hydraulic dump hopper with 2 cylinders and manual doors, 550CCA Marine battery, mounted in Plastic battery box,electric over hydraulic pack in small lockable metal vented box	**$3,500.00**
SPHTD	hydraulic top doors (manual standard and spring assist)	**$1,750.00**
SPHRDS	hydraulic rear single door (manual standard)	**$1,350.00**
SPHRDD	dual rear hydraulic doors add to above single door	**$1,050.00**
SPAWDE	auger for 2, 3 & 4 ton trailers, includes , diesel engine 21HP, Hydraulic pump and motors, rear manual pivot swing chute, top bifold doors	**$20,000.00**
VK70AC	70 CFM hydraulic air compressor (available on Auger with diesel engine only)	**$16,500.00**
SP30GAC	30cfm gas operated air compressor	**$13,500.00**
AHR40	retractable hose reel and 40 ft or air hose with blow wand	**$850.00**
SPSMNT	skid mounted units with no trailer for slip in , includes lifting rings or fork pockets	**-$1,500.00**
SPSMNT	skid mounted units with no trailer for slip in , includes lifting rings or fork pockets	**-$1,500.00**
	Pothole Patcher Body: Spaulding 3TA Aspahlt Body	
3TCM	3Ton insulated asphalt body heated with diesel or propane chassis mounted with hydraulic top doors	**$55,000.00**

4TCM	4 ton hopper capacity add	**$3,000.00**
5TCM	5 ton hopper capacity add	**$5,500.00**
6TCM	6 ton hopper capacity add	**$7,500.00**
8TCM	8 ton hopper capacity add	**$9,500.00**
SHL	skid for hook lift	**$4,900.00**
	REAR HOPPER OPTIONS	
RCA	REAR CROSS AUGER AVAILABLE W/WITHHOPPER AUGER,ATTACHMENT MOVES 30 INCHES LEFT OR RIGHT FOR SIDE DELIVERY	**$9,800.00**
RRA	rear auger rotates with 180 degree delivery span	**$10,500.00**
RFSA	rear fold up removable shovel apron	**$1,350.00**
RFSP	rear fip dooor shovel pan	**$650.00**
RPSP	rear pivoting swivel pan	**$890.00**
	Burner /heather options	
BC	propane or diesel hopper	**$990.00**
EHCM	electric heat as main source(2) 7000KW heaters powered by hydraulic generator (dual Pto and Pump required)	**$20,500.00**
AEH220V	Auxillary electric overnight heat element for hopper 220V/ground fault and quick disconnect safety	**$3,040.00**
AEH120V	Auxillary electric overnight heat element for hopper 110V ground fault and quick dissconnect switch	**$2,890.00**
TCTTH	propane/diesel/truck enginge coolant for emulision tank	**$1,250.00**
	Torch/sprayer options	
PTR30FTH	Propane torch with regulator /30 ft hose(add 20LB propane cylinder holder if burner source is not propane)	**$990.00**
ABG30FTH	air blow gun with 30 ft 30 (air source availabilty)	**$750.00**
12VDCSS	12VDc solvent sprayer with 10 gallon tank ,30 ft foot hose and spray wand	**$1,250.00**
HTTSS	HYD MOTOR/emulision gear pump / 30 foot of hose with wand and on/off valve	**$3,350.00**
SWDMT	dead man tigger wand with replaceable spray nozzle	**$850.00**
	Hose Reel Option	
HRAS	air or, solvent hose reel	**$570.00**
HRP	Propane hose reel	**$850.00**
HRTT	Emulision hose reel	**$990.00**
HRHT	Hydraulic retractable hose reel	**$2,150.00**
	Emulision tanks	
30GTT	30 gallon heated emulsion tank	**$2,950.00**
60GTT	60 gallon	**$4,050.00**
80GTT	80 gallon	**$4,490.00**
	Lighting Options	
2STDL ED	2 top door LED strobes(self leveling on dump model)	**$950.00**
4MS	4 mini strobes	**$450.00**
LEDAD	Arrow stick LED directional	**$1,150.00**
LEDBA	LED Arrow Board	**$2,800.00**
HYLABC	Hydraulic lift for arrow board to raise for high viability and lower , behind cab	**$2,550.00**
	Additional Options	
SBGD13	Spoils bin under deck with weighted gravity design for despensing1/3 CU	**$1,550.00**
CHPOR	cone holder	**$250.00**
AC70CFMHD	70 CFM air compressor hydraulic driven, for air tools (tools not included)	**$14,000.00**
HYTLOB	compactor hydraulic lift platfrom or Bulldog 500 lift each	**$2,550.00**
SB4848	sign box to hold various sytles of temporary road signs	**$1,050.00**
SMTBH	Tool box for shovels, side hopper mount with lockable door	**$2,950.00**
LPH20LB	20 LB LP tank and holder	**$690.00**
LPT50HFM	50 gallon horizontial frame mount LPG tank	**$1,990.00**

DHMA	dual hydraulic motor for extra torque on main hopper auger	**$2,650.00**
AAA	agitator for auger dispensing hopper	**$2,950.00**
OJ3T4T	oil jacketed hopper ,3T,4T	**$4,950.00**
OJ5T6T8T	oil jacketed hopper ,5T,6T,8T	**$6,200.00**
CCTD	cab controls to operate top doors	**$1,050.00**
20LBFE	20 LB fire extinguisher in quick release holder	**$350.00**
10WJ	10 gallon water jug (non drinkable)	**$390.00**
125CST	**125 gallon oil jacketed crack sealer**	**$58,000.00**
	Diesel fired burner, automatic temperature control,	
	single axle trailer, 5200 LB torsion axles, electric brakes,	
	heated tower, heated cabinet, 110V heated hose, pumping system	
	Kubota, 3 cylinder, 24HP, diesel engine	
225CST	**225 Gallon Oil Jacketed Crack Sealer**	**$60,000.00**
	Diesel fired burner, automatic temperature control,	
	single axle trailer, 7000 LB torsion axles, electric brakes,	
	heated tower, heated cabinet, 110V heated hose, pumping system	
	Kubota, 3 cylinder, 24HP, diesel engine	
	Options for Melting Kettle 100 MKT	
6HPDE	Diesel engine upgrade 6 HP (in lieu of standard gas engine to power hydraulic on agitator)	**$6,000.00**
6EF	Extened frame to carry 2 push carts with drop down gates includes frame upgrade to 6X2X5/16 frame	**$5,300.00**
3PC	3 wheel heated push cart	**$2,300.00**
15PPWW	pour pot with wheels (non heated) capacity minimum 1 gallon includes hold down bracket on trailer frame	**$375.00**
1000LBMH	Manual hoist for lifting carts or propane tank	**$1,070.00**
12VDCH	12VDC hoist in lieu of manual hoist	**$1,350.00**
HCL	Hydraulic cart lift in lieu of above hoist options (hold one cart)	**$2,850.00**
15MBC	Battery charger marine grade 15 AMP	**$490.00**
20FE	Fire extinguisher 20 LB ABC with holding bracket and weather proof inspection tag	**$390.00**
MLPB	Manual light 150,000 BTU propane burner in lieu of standard diesel burner includes holding bracket for one 100 LB propane cylinder	**$290.00**
2SPBAT	Automatic temperture control in lieu of manual light on propane burner includes 2 setting for BTU out put, pre set with toggle switch operation	**$850.00**
100HB	Holding bracket for additional 100 LB propane tank (1 is standard)	**$480.00**
200PT	Propane torch 200,000 BTU with holding bracket and 30 Ft UL propane rated hose and regulator	**$790.00**
20PHB	Holding bracket for 20 LB propane tank (required on trailer with standard diesel burner if propane torch option is chosen)	**$290.00**
PHR	Propane retractable hose reel with 40 FT of UL rated hose	**$790.00**
	Option for Cracksealers - 125CS and 225CS	
SPPATHLB	propane in lieu of diesel burner includes brackets fo r2 - 100 LB vapor propane tanks	**$880.00**
SP2100LBPT	2- 100 LP propane tanks (empty)	**$450.00**
SPV70CLE	70 cfm air compressor includes 44HP diesel engine	**$20,000.00**
SBBMB-34	retractable hose reel and 40 FT of 3/4 inch air hose and air blow 5 foot wand, ball valve on/off	**$1,850.00**
SPABW	air blow wand pistol grip with nozzle tip 36 inches	**$390.00**
SBCS0305	extra 110V heated hose	**$3,200.00**
SBCS0307	extra wand hose holder with pivot sealing cup for heated hose	**$1,450.00**
SBCS0306ST	3 inch sealing swivel disk	**$190.00**
SP6PCH	Cone holder (hold 6 cones not included)	**$160.00**
20FE	20 LB fire extinguisher in quick release holder and weatherproof inspection tag	**$450.00**
SP30HTT	30 gallon heated tack tank, insulated, auto temp, gravity spigot	**$2,950.00**

SPHESVP	spray system for tack, Honda gas engine with asphalt pump, dead man spray wand and 30 Ft of 1/2 inch hose	**$3,150.00**
SPTRHR	emulsion retractable hose reel for tack sprayer	**$850.00**
SPCWP	Cold weather package 12VDC fuel heater	**$550.00**
	Asphalt Tack Distributors	
150TS	150 Gallon Tack Tank Skid Mount	**$9,900.00**
250TS	250 Gallon Tack Tank Skid Mount add to 150TS	**$2,100.00**
150TT	150TT Trailer mounted tanks, single axle, leaf spring suspension, 225/75/R15 tires, lighting	**$2,750.00**
250TT	250TT Trailer mounted tanks. Single axle, leaf springs suspension, 225/75/R15 tires, lighting	**$2,950.00**
	Aspahlt Tack Distributors OPTIONS	
LPAT	Automatic Temperature control on LP, 2 BTU settings 45,000 BTU & 90,000BTU	**$2,950.00**
DBINTT	Diesel Burner105,000 BTU , Automatic tempeture Contol, insulated tank	**$6,100.00**
DE6.7HP	Diesel 6.7HP Engine with 6:1 Gear reduction	**$6,100.00**
GR6:1	Gear Reduction6:1 on Honda Gas engine	**$420.00**
ES	Electric start on either engine	**$1,300.00**
VP32	Viking Pump with built in relief on pump	**$1,050.00**
RSB8	Rear 8 foot spray bar	**$2,100.00**
RSFB	recirulation from rear spray bar to tank	**$1,650.00**
P3	Pintle eye 3"	**$105.00**
47EDI	Bulldog Vibratory single drum roller, weighs 100 LBS compaction 850 PSI	**$2,950.00**
BDRMB	mounting basket	**$270.00**

2018 RCV MSRP Unit Price Guide

Version 2

Effective December 1, 2017

HEIL

THE WHEELS ARE ALWAYS TURNING

A DOVER COMPANY

Environmental Solutions Group

A DOVER COMPANY

COMMERCIAL FRONT LOADERS

Half/Pack® 3-7

Half/Pack® Sierra 8-12

Half/Pack® Freedom 13-17

Half/Pack 49-53
Featuring Odyssey™ controls

Half/Pack Sierra 54-58
Featuring Odyssey™ controls

Half/Pack Freedom 59-63
Featuring Odyssey™ controls

RESIDENTIAL FRONT LOADERS

Half/Pack 18-22
Featuring Odyssey™ controls

Half/Pack Sierra 23-27
Featuring Odyssey™ controls

Half/Pack Freedom 28-32
Featuring Odyssey™ controls

Half/Pack Factor AFL™ 33-37

Half/Pack Factor AFL™ Sierra 38-42

Half/Pack Factor AFL™ Freedom 43-48

REAR LOADERS

PT 1000 64-68

DuraPack® 5000 69-73

PowerTrak® Commercial 74-78

PowerTrak® Commercial Plus 79-83

MULTI-COMPARMENT VEHICLES

DuraPack® 40 60 Split Body 113-117

AUTOMATED SIDE LOADERS

DuraPack® Rapid Rail® 84-89

DuraPack® Python 90-95

Liberty 96-102

MultiPack 103-107

Rapid Rail 108-112

RESOURCES

Options photo index.....**118**

Bayne cart lifters and carry cans.....**125**

Terms and conditions.....**126**

Warranty policy.....**127**

Sales order cover page.....**128**

Ready Truck and chassis modifications...**129**

Half/Pack®

High-Compaction Front Loader

Standard Equipment Features included in Base Price

- Heavy-duty sliding top door
- Hinged and completely sealed aluminum left-side body access door with step and grab Handle
- Cab shield with hinged rubber tip extension - steel
- Front head closure screen
- Under hopper liquid sump with 2 clean-out doors
- Body service props for service hoist models and service lift
- Tailgate service props
- Fully automatic Shur-Lock™ tailgate latches
- Clamp-on arms
- 8,000 lb. capacity arms - WASTEC WRP 06-1996 rated
- Four arm shaft bearing supports
- Fork cross shaft rubber bumpers
- Bolt-on rubber arm stops
- Heavy-duty forks - 1 1/2" thick x 59" grip length
- Front mount single vane pump
- Chrome-plated cylinder rods and telescopic sleeves
- Crossed packing cylinders
- Chassis frame-mounted oil tank with level / temperature gauge and suction shut-off valve
- 3-micron return line filter with magnetic trap and in-cab filter bypass monitor
- 100-micron suction line strainer
- Abrasion-resistant hydraulic hoses
- Cortex Controller ™ with InSight™ diagnostic display with integrated 3rd Eye camera feed
- Throttle advance / throttle limit kit
- Joystick in-cab air controls
- Complete array of in-cab function indicator lights
- 5 lb. in-cab fire extinguisher
- Tailgate lock & closed indicator sensor with in-cab indicator and alarm
- Remote I/O for tailgate valve
- Streetwise Hydraulics™
- Arm rest for operator controls
- Backup alarm
- Backup and license plate light
- LED center-mounted brake light
- LED duplicate high and low mount stop, turn, and tail lights
- LED mid-body turn signals
- Strobe light, amber mounted on lower tailgate - in-cab switch, pump on, and reverse activated
- Front and rear mud flaps - anti-sail / anti-splash
- Rear underride guard
- Hopper flood light
- Shovel kit mounted on back of the packer
- Low oil level sensor with light, buzzer, and pump shut-off
- Severe-duty wear bar kit
- 3" sump drain on street side and curb side
- Remote packer lube
- Greaseless tailgate hinge and lift cylinders
- Hydraulic oil temperature sensor with alarm
- Body Hydraulic Pressure sensor
- Arm / Fork over height warning kit
- 20 lb. fire extinguisher
- FMVSS #108 clearance lights and reflectors
- ICC reflective tape
- Rear camera bracket and flood lights - reverse activated
- Body undercoating
- Customer's choice of one color finish paint from Color Smart brochure
- Standard 1-year warranty (2,000 Hours of Operation)
- ANSI Z 245.1-2012 compliant
- Safety triangle

Effective December 1, 2017 Half/Pack Sales Order Form

Base Units Half/Pack			
☐	20 cubic yard		$113,800
☐	23 cubic yard		$113,255
☐	28 cubic yard		$113,905
☐	32 cubic yard		$117,310
☐	Service Hoist Kit	B9	$4,385
Hopper Size			12 yd³
CHASSIS MUST COMFORM WITH HEIL'S MOST CURRENT CHASSIS SPECIFICATIONS FOUND AT WWW.HEIL.COM			
* NOTE: Red numbers reference Option Photo Index			
Mounting Options			
☐	Full Factory Mount for Service Hoist or Serviceable Eject - Includes Body Props and Rear Pivot		$5,505
☐	Mount at Dealer Destination		$735
Power Take Off / Pump Options			
☐	Front Mount Vane Pump		STD
☐	Operate at Idle (OAI) Front Mount Tandem Vane Pump		$3,750
☐	890 Hot Shift PTO with Single Vane Pump		$3,735
☐	897 Constant Duty PTO with Single Vane Pump		$3,735
Commercial Gripper Option			
☐	Commercial Gripper attachment to the fork cross shaft to service 32-96 gallon residential containers (Commercial Grabbers add 6.5" of overall height when arms are fully raised and forks fully tucked)		$7,035
Control Options			
☐	Left Hand Lever In-Cab Air Controls in lieu of Joystick	CE6	$250
☐	Outside Air Lever Controls Kit (arms, forks and packer) with Throttle Advance	CE5	$2,335
Lighting and Electrical Accessories			
☐	Single Led Hopper Mounted Container Work light		$590
☐	Multi-Function (SMART) Lights		$610
☐	Body Side Backing Assist Lights - LED		$505
☐	Dual Oval Flat LED Strobes Mounted Mid-T/G - in-cab switch, pump on, and reverse activated	L15	$1,055
☐	Dual Cab Guard Mounted Flood Lights		$495
☐	Dual LED Cab Mounted Oval Strobe Lights		$725
Camera Systems			
All camera systems are mounted with protective camera brackets and twin tailgate flood lights.			
CAMERA MONITOR LOCATION WILL BE CAB ROOF MOUNTED Swivel monitor bracket will be provided for dual drive chassis			
360 * Camera Systems and Options			
☐	360 Degree Camera Package - Includes 360 degree camera system (4 camera), DVR capability, Dash Camera, Operator Facing Camera, and Hopper Camera.		$10,260
☐	360 Base Camera System - Includes 360 (4 Camera System) for Monitoring Only		$8,440
☐	Add DVR for Recording Function - Includes Dash Camera for Road Facing View		$1,680
☐	Add Operator Facing Camera for Operator Monitoring		$385
☐	Add Hopper Camera		$1,035
3rd Eye Camera Systems			
☐	3rd Eye Single Camera System with Single Camera Mounted on Tailgate		$1,580
☐	3rd Eye Double Camera System (Cameras on T/G & LH Cab)		$2,030
☐	3rd Eye Double Camera System (Cameras on T/G & RH Cab)		$2,030
☐	3rd Eye Double Camera System (Cameras on T/G & RH Alley)		$2,030
☐	3rd Eye Double Camera System (Cameras on T/G & Hopper)		$2,030
Load Cell Scale Systems			
☐	Heil Optimum Payload System (HOPS) using Air-Weigh Axle Scales	CE20	$8,740
☐	Air-Weigh Axle Scale System without Interlock	CE20	$8,155

Effective December ,1,2017 Half/Pack Sales Order Form

Auxiliary Axle Tire Options		
255/70R-22.5 - Qty(2) load range H, 5,510 pound single max load at 120 psi with rims		$2,240
275/70R-22.5 - Qty(2) load range H, 7,000 pound single max load at 120 psi with rims		$2,835
11 R-22.5 - Qty(2) load range H, 6,610 pound single max load at 120 psi with rims		$2,390

Body Options		
Sliding Top Door - Aluminum - May not be compatible with roof mounted CNG system		$4,855
Tailgate Mounted Roof Access Ladder (Only one selection allowed) Not Available with CNrG Tailgate option		$1,345
Curbside Mounted Roof Access Ladder (Only one selection allowed)		$1,345
Hopper Floor Liner (3/16" - AR400)		$1,795
Hopper Floor Liner (1/4" - AR400)		$2,855
Body Roof Retainer Teeth - 2 rows at front of body - Minimizes spring back in cardboard and recycling applications	B26	$1,040
Tapered, Bolt-on Hopper Side Wind Screens - increases overall height to 13' 6"	B25	$1,515
High Pressure Filter Kit	B3	$900
High Pressure Filter Monitor		$670
60 Gallon Washout Tank - side mounted - Not available with pusher axle	B10	$2,025
60 Gallon Washout Tank - rear mounted - Not available with tag axle		$2,025
Second 20 lb. Fire Extinguisher		$495
Tool Box Bumper Mount - Steel	B6	$765
Tool Box Bumper Mount - Aluminum		$905
Extendable Broom Kit - Mounted on hopper side		$410
Fork Stop Kit - Increases overall height 20" when fork are in the full dump position		$245
Cab Protector Extension Raise - Manual Jack		$1,140
Rear Caution Decal		$285
Wheel Chock Kit - Dual		$160
Fall Protection Kit		$3,400
D-Ring Fall Protection		$825
Hydraulic Oil Tank Quick Disconnect Kit - For use with filter buggy		$815
Perma Coat on Cab Protector		$590
Hydraulic Raise Cab Protector Kit		$5,335
Spill Kit		$340
Packer Mounted Retainer Teeth		$725
Hydraulic Oil Tank Heater - 500 watts		$1,185
Fender Extension Kit		$725
California Back Up Alarm		$675
Infinity Series Packer/Eject Cylinders with scrapers and hardened rods to 50 HRC - Includes Five (5) Year Packer/Eject Cylinder Only Warranty that covers dents and dings (This Option is Required if purchasing extended warranty's below)		$3,055

Effective December 1, 2017 Half/Pack Sales Order Form

	CNrG Tailgate Mounted CNG - Includes Installation Fee		
☐	60 DGE CNrG System		$40,425
☐	75 DGE CNrG System		$42,110
☐	90 DGE CNrG System		$47,865
☐	105 DGE CNrG System		$54,670
	FET Exempt CNrG Tailgate Mounted CNG For 20YD Bodies Only- Includes Installation Fee		
☐	60 DGE CNG System		$ 42,925
☐	75 DGE CNG System		$ 44,610
☐	90 DGE CNG System		$ 50,365
☐	105 DGE CNG System		$ 57,170
	CNrG Options		
☐	Front Bumper Fill with Kill Cap		$1,250
	CNG Installation - Top of Body Installation		
☐	CNG Installation Charge - Includes brackets, temporary tank rental, hardware, and mounting of CNG system		$5,625
	Extended Complete Body Warranty Options		
☐	Two (2) Year (Months 13-24) (Maximum 4,000 hrs. of Operation) Complete Heil Body Warranty Requires additional purchase of Infinity packer/eject cylinders from above		$4,400
☐	Three (3) Year (Months 13-36) (Maximum 6,000 hrs. of Operation) Complete Heil Body Warranty Requires additional purchase of Infinity packer/eject cylinders from above		$7,550
☐	Four (4) Year (Months 13-48) (Maximum 8,000 hrs. of Operation) Complete Heil Body Warranty Requires additional purchase of Infinity packer/eject cylinders from above		$10,635
☐	Five (5) Year (Months 13-60) (Maximum 10,000 hrs. of Operation) Complete Heil Body Warranty Requires additional purchase of Infinity packer/eject cylinders from above		$14,255
	Extended Cylinder Warranty Options		
☐	Two (2) Year (Months 13-24) (Maximum 4,000 hrs. of Operation) All other Non-Infinity Cylinder Warranty - Requires additional purchase of Infinity packer/eject cylinders from above		$970
☐	Three (3) Year (Months 13-36) (Maximum 6,000 hrs. of Operation) All other Non-Infinity Cylinder Warranty - Requires additional purchase of Infinity packer/eject cylinders from above		$1,945
☐	Four (4) Year (Months 13-48) (Maximum 8,000 hrs. of Operation) All other Non-Infinity Cylinder Warranty - Requires additional purchase of Infinity packer/eject cylinders from above		$2,915
☐	Five (5) Year (Months 13-60) (Maximum 10,000 hrs. of Operation) All other Non-Infinity Cylinder Warranty - Requires additional purchase of Infinity packer/eject cylinders from above		$3,395
	Paint Options		
NOTE: LIST PAINT CODES ON PAINT DIAGRAM			
☐	Customized Paint Color - Paint Color Code NOT included in the Color Smart Brochure		$390
☐	Two Tone Paint		$1,485
☐	Paint Striping - first stripe		$1,250
☐	Paint Striping - each additional stripe		$695
☐	Metallic Paint		$5,000
☐	Clear coat Finish		$1,735
☐	Anti-Graffiti Clear coat Finish		$2,500
☐	Prime Paint Only - deduct		($1,220)
	TOTALS		
	Total from Options Above (MSRP)		**$0**
	Additional Options (Custom's, Chassis Mods, Etc.) Total		
	Subtotal		**$0**
	Dealer Discount (%)	**0%**	**$0**
	Dealer Net Price		**$0**
	Additional Discount (SPR)		
	Freight		
	Total Price per Unit		**$0**

HALF/PACK®

Paint Stripe & Accessories Requirements

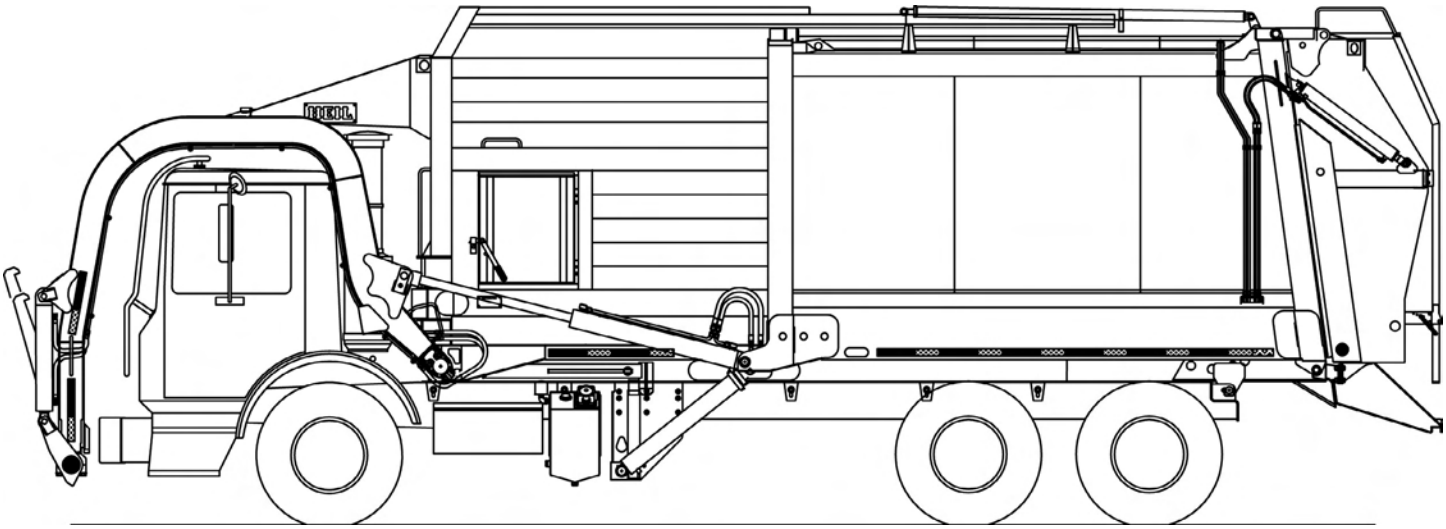

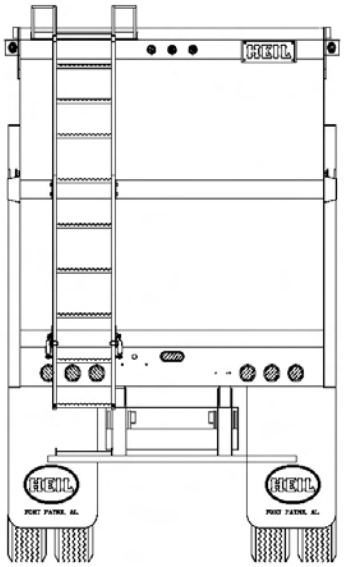

PAINT AND OPTIONS LAYOUT DETAIL
USE THIS FORM TO DESCRIBE PAINT SCHEMES
BE SPECIFIC ABOUT DIMENSIONS AND DETAILS

Sales Order #		Submitted by	
Customer			
Paint Color 1			
Paint Color 2			
Paint Color 3			
Chassis Make			
Chassis Model			
Wheelbase			
Body Size		Approved by	

Half/Pack® Sierra

Optimal Payload Front Loader

Standard Equipment Features included in Base Price

- Heavy-duty sliding top door
- Hinged and completely sealed aluminum left-side body access door with step and grab handle
- Full aluminum cab shield with air cylinder assisted raise
- Under hopper liquid sump with 2 clean-out doors
- Body service props for service hoist models and service lift
- Tailgate service props
- Fully automatic Shur-Lock™ tailgate latches
- Clamp-on arms
- 8,000 lb. capacity arms - WASTEC WRP 06-1996 rated
- Four arm shaft bearing supports
- Fork cross shaft rubber bumpers
- Bolt-on rubber arm stops
- Heavy-duty forks - 1 1/2" thick x 59" grip length
- Front mount single vane pump
- Chrome-plated cylinder rods and telescopic sleeves
- Crossed packing cylinders
- Chassis frame-mounted oil tank with level / temperature gauge and suction shut-off valve
- 3-micron return line filter with magnetic trap and in-cab filter bypass monitor
- 100-micron suction line strainer
- Abrasion-resistant hydraulic hoses
- Cortex Controller ™ with InSight™ diagnostic display with integrated 3rd Eye camera feed
- Throttle advance / throttle limit kit
- Joystick in-cab air controls
- Complete array of in-cab function indicator lights
- 5 lb. in-cab fire extinguisher
- Tailgate lock & closed indicator sensor with in-cab indicator and alarm
- Remote I/O for tailgate valve
- Streetwise Hydraulics™
- Arm rest for operator controls
- Backup alarm
- Backup and license plate light
- LED center-mounted brake light
- LED duplicate high and low mount stop, turn, and tail lights
- LED mid-body turn signals
- Strobe light, amber mounted on lower tailgate - in-cab switch, pump on, and reverse activated
- Front and rear mud flaps - anti-sail / anti-splash
- Rear underride guard
- Hopper flood light
- Shovel kit mounted on back of the packer
- Low oil level sensor with light, buzzer, and pump shut-off
- Severe-duty wear bar kit
- 3" sump drain on street side and curb side
- Remote packer lube kit
- Greaseless tailgate hinge and lift cylinders
- Hydraulic oil temperature sensor with alarm
- Body hydraulic pressure sensor
- Arm / Fork over height warning kit
- 20 lb. fire extinguisher
- FMVSS #108 clearance lights and reflectors
- ICC reflective tape
- Rear camera bracket and flood lights - reverse activated
- Body undercoating
- Customer's choice of one color finish paint from Color Smart brochure
- Standard 1-year warranty (2,000 Hours of Operation)
- ANSI Z 245.1-1999 compliant
- Safety triangle
- Cavity coat and joint sealer

Effective December 1, 2017 Sierra Sales Order Form

Base Units Sierra			
☐	28 cubic yard		$123,020
☐	Service Hoist Kit	B9	$4,385
Hopper Size			12 yd³
CHASSIS MUST COMFORM WITH HEIL'S MOST CURRENT CHASSIS SPECIFICATIONS AT WWW.HEIL.COM			
* NOTE: Red numbers reference Option Photo Index			
Mounting Options			
☐	Full Factory Mount for Service Hoist or Serviceable Eject - Includes Body Props and Rear Pivot		$5,505
☐	Mount at Dealer Destination		$735
Power Take Off / Pump Options			
☐	Front Mount Vane Pump		STD
☐	Operate at Idle (OAI) Front Mount Tandem Vane Pump		$3,750
☐	890 Hot Shift PTO with Single Vane Pump		$3,735
☐	897 Constant Duty PTO with Single Vane Pump		$3,735
Commercial Gripper Option			
☐	Commercial Gripper attachment to the fork cross shaft to service 32-96 gallon residential containers (Commercial Grabbers add 6.5" of overall height when arms are fully raised and forks fully tucked)		$7,035
Control Options			
☐	Left Hand Lever In-Cab Air Controls in lieu of Joystick	CE6	$250
☐	Outside Air Lever Controls Kit (arms, forks and packer) with Throttle Advance	CE5	$2,335
Lighting and Electrical Accessories			
☐	Single Led Hopper Mounted Container Work light		$590
☐	Multi-Function (SMART) Lights		$610
☐	Body Side Backing Assist Lights - LED		$505
☐	Dual Oval Flat LED Strobes Mounted Mid-T/G - in-cab switch, pump on, and reverse activated	L15	$1,055
☐	Dual Cab Guard Mounted Flood Lights		$495
☐	Dual LED Cab Mounted Oval Strobe Lights		$725
Camera Systems			
All camera systems are mounted with protective camera brackets and twin tailgate flood lights			
CAMERA MONITOR LOCATION WILL BE CAB ROOF MOUNTED			
Swivel monitor bracket will be provided for dual drive chassis			
360 ˚ Camera Systems and Options			
☐	360 Degree Camera Package - Includes 360 degree camera system (4 camera), DVR capability, Dash Camera, Operator Facing Camera, and Hopper Camera.		$10,260
☐	360 Base Camera System - Includes 360 (4 Camera System) for Monitoring Only		$8,440
☐	Add DVR for Recording Function - Includes Dash Camera for Road Facing View		$1,680
☐	Add Operator Facing Camera for Operator Monitoring		$385
☐	Add Hopper Camera		$1,035
3rd Eye Camera Systems			
☐	3rd Eye Single Camera System with Single Camera Mounted on Tailgate		$1,580
☐	3rd Eye Double Camera System (Cameras on T/G & LH Cab)		$2,030
☐	3rd Eye Double Camera System (Cameras on T/G & RH Cab)		$2,030
☐	3rd Eye Double Camera System (Cameras on T/G & RH Alley)		$2,030
☐	3rd Eye Double Camera System (Cameras on T/G & Hopper)		$2,030
Load Cell Scale Systems			
☐	Heil Optimum Payload System (HOPS) using Air-Weigh Axle Scales	CE20	$8,740
☐	Air-Weigh Axle Scale System without Interlock	CE20	$8,155

Effective December 1, 2017 Sierra Sales Order Form

Auxiliary Axles Options			
* NOTE: All axles MUST BE installed with tires so chassis can be re-certified to new GAWR and GVWR ratings			
☐	Watson & Chalin Self Steering Pusher Axle: 13,000 pound capacity, hub piloted or 20" spoke wheel hubs, automatic slack adjusters, type 16 air chambers, steering stabilizer kit and reverse lift kit		$14,145
☐	Watson & Chalin Self Steering Tag Axle: 13,000 pound capacity, hub piloted or 20" spoke wheel hubs, automatic slack adjusters, type 16 air chambers, steering stabilizer kit and reverse lift kit, includes Tag Axle Spill Shield		$14,455
☐	Watson & Chalin Rigid Pusher Axle: 25,000 pound capacity, hub piloted or 20" spoke wheel hubs, 30/30 brake chambers, automatic slack adjusters, 1,300 cubic inch air tank and regulator kit		$10,835
☐	Watson & Chalin Rigid Tag Axle: 25,000 pound capacity, hub piloted or 20" spoke wheel hubs, 30/30 brake chambers, automatic slack adjusters, 1,300 cubic inch air tank and regulator kit, includes Tag Axle Spill Shield		$11,150
* Note: All auxiliary applications must be approved by Heil prior to order acceptance			
Auxiliary Axle Tire Options			
☐	255/70R-22.5 - Qty(2) load range H, 5,510 pound single max load at 120 psi with rims		$2,240
☐	275/70R-22.5 - Qty(2) load range H, 7,000 pound single max load at 120 psi with rims		$2,835
☐	11 R-22.5 - Qty(2) load range H, 6,610 pound single max load at 120 psi with rims		$2,390
Body Options			
☐	Sliding Top Door - Aluminum - May not be compatible with roof mounted CNG system	B28	$4,855
☐	Tailgate Mounted Roof Access Ladder (Only one selection allowed) Not Available with CNrG Tailgate option		$1,345
☐	Curbside Mounted Roof Access Ladder (Only one selection allowed)		$1,345
☐	High Pressure Filter Kit	B3	$900
☐	High Pressure Filter Monitor		$670
☐	60 Gallon Washout Tank - side mounted - Not available with pusher axle	B10	$2,025
☐	60 Gallon Washout Tank - rear mounted - Not available with tag axle		$2,025
☐	Second 20 lb. Fire Extinguisher		$495
☐	Tool Box Bumper Mount - Steel	B6	$765
☐	Tool Box Bumper Mount - Aluminum		$905
☐	Extendable Broom Kit - Mounted on hopper side		$410
☐	Rear Caution Decal		$285
☐	Wheel Chock Kit - Dual		$160
☐	Fall Protection Kit		$2,400
☐	D-Ring Fall Protection		$825
☐	Hydraulic Oil Tank Quick Disconnect Kit - For use with filter buggy		$815
☐	Perma Coat on Cab Protector		$590
☐	Spill Kit		$340
☐	Packer Mounted Retainer Teeth		$725
☐	Hydraulic Oil Tank Heater - 500 watts		$1,185
☐	Fender Extension Kit		$725
☐	California Back Up Alarm		$675
☐	Infinity Series Packer/Eject Cylinders with scrapers and hardened rods to 50 HRC - Includes Five (5) Year Packer/Eject Cylinder Only Warranty that covers dents and dings (This Option is Required if purchasing extended warranty's below)		$3,055

Effective December 1, 2017 Sierra Sales Order Form

	CNrG Tailgate Mounted CNG - Includes Installation Fee		
☐	60 DGE CNG System		$40,425
☐	75 DGE CNG System		$42,110
☐	90 DGE CNG System		$47,865
☐	105 DGE CNG System		$54,670
	CNrG Options		
☐	Front Bumper Fill with Kill Cap		$1,250
☐	Fast Fill Fuel Management Option		$1,873
	CNG Installation - Top of Body Installation		
☐	CNG Installation Charge - Includes brackets, temporary tank rental, hardware, and mounting of CNG system		$5,625
	Extended Warranty		
☐	Two (2) Year (Months 13-24) (Maximum 4,000 hrs. of Operation) Complete Heil Body Warranty Requires additional purchase of Infinity packer/eject cylinders from above		$4,400
☐	Three (3) Year (Months 13-36) (Maximum 6,000 hrs. of Operation) Complete Heil Body Warranty Requires additional purchase of Infinity packer/eject cylinders from above		$7,550
☐	Four (4) Year (Months 13-48) (Maximum 8,000 hrs. of Operation) Complete Heil Body Warranty Requires additional purchase of Infinity packer/eject cylinders from above		$10,635
☐	Five (5) Year (Months 13-60) (Maximum 10,000 hrs. of Operation) Complete Heil Body Warranty Requires additional purchase of Infinity packer/eject cylinders from above		$14,255
☐	Two (2) Year (Months 13-24) (Maximum 4,000 hrs. of Operation) All other Non-Infinity Cylinder Warranty - Requires additional purchase of Infinity packer/eject cylinders from above		$970
☐	Three (3) Year (Months 13-36) (Maximum 6,000 hrs. of Operation) All other Non-Infinity Cylinder Warranty - Requires additional purchase of Infinity packer/eject cylinders from above		$1,945
☐	Four (4) Year (Months 13-48) (Maximum 8,000 hrs. of Operation) All other Non-Infinity Cylinder Warranty - Requires additional purchase of Infinity packer/eject cylinders from above		$2,915
☐	Five (5) Year (Months 13-60) (Maximum 10,000 hrs. of Operation) All other Non-Infinity Cylinder Warranty - Requires additional purchase of Infinity packer/eject cylinders from above		$3,395
	Paint Options		
	NOTE: LIST PAINT CODES ON PAINT DIAGRAM		
☐	Customized Paint Color - Paint Color Code NOT included in the Color Smart Brochure		$390
☐	Two Tone Paint		$1,485
☐	Paint Striping - first stripe		$1,250
☐	Paint Striping - each additional stripe		$695
☐	Metallic Paint		$5,000
☐	Clear coat Finish		$1,735
☐	Anti-Graffiti Clear coat Finish		$2,500
☐	Prime Paint Only - deduct		($1,220)
	TOTALS		
	Total from Options Above (MSRP)		**$0**
	Additional Options (Custom's, Chassis Mods, Etc.) Total		
	Subtotal		**$0**
	Dealer Discount (%)	**0%**	**$0**
	Dealer Net Price		**$0**
	Additional Discount (SPR)		
	Freight		
	Total Price per Unit		**$0**

HALF/PACK® SIERRA

Paint Stripe & Accessories Requirements

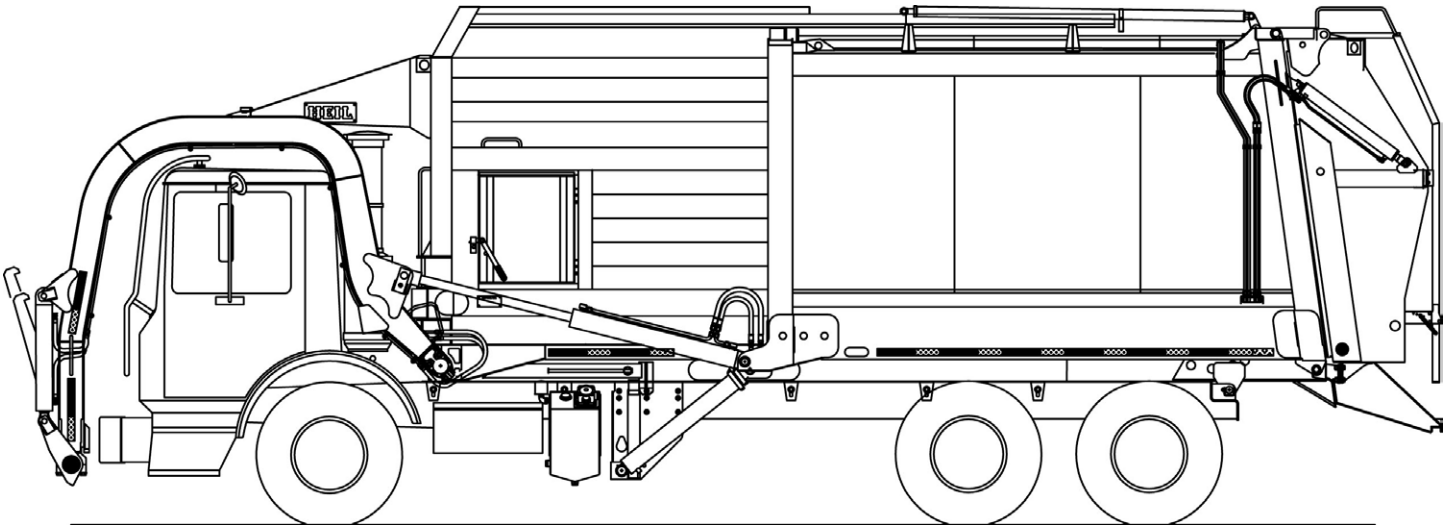

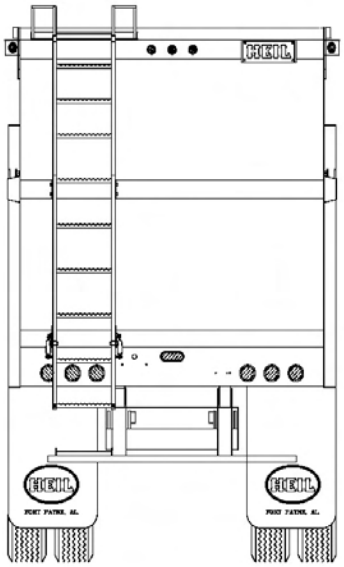

Paint and options layout detail
Use this form to describe paint schemes
Be specific about dimensions and details

Sales Order #		Submitted by	
Customer			
Paint Color 1			
Paint Color 2			
Paint Color 3			
Chassis Make			
Chassis Model			
Wheelbase			
Body Size		Approved by	

Half/Pack® Freedom

Lightweight Front Loader

Standard Equipment Features included in Base Price

- Hinged and completely sealed left-side body access door with step and grab handle
- Full aluminum cab shield with air cylinder assisted raise
- 3" underbody gate valve on street side for liquid removal
- Front head closure screen
- Body service props for service lift
- Tailgate service props
- Fully automatic Shur-Lock™ tailgate locks
- Clamp-on arms
- 8,000 lb. capacity arms - WASTEC WRP 06-1996 rated
- Two arm shaft bearing supports
- Bolt-on rubber arm stops
- Heavy-duty forks - 1" thick x 59" grip length
- Front mount single vane pump
- Chrome-plated cylinder rods and telescopic sleeves
- Chassis frame-mounted aluminum oil tank with level / temperature gauge and suction shut-off valve
- 3-micron return line filter with magnetic trap and in-cab filter bypass monitor
- Heil Optimum Payload System - HOPS™
- 100-micron suction line strainer
- Abrasion-resistant hydraulic hoses
- Cortex Controller ™ with InSight™ diagnostic display with integrated 3rd Eye camera feed
- Throttle advance / throttle limit kit
- Joystick in-cab air controls
- Complete array of in-cab function indicator lights
- Arm rest for operator controls
- 5 lb. in-cab fire extinguisher
- Tailgate lock and closed indicator sensor with in cab indicator and alarm
- Remote I/O for tailgate valve
- Streetwise Hydraulics™
- Backup alarm
- Hopper flood light
- Low oil level sensor light, buzzer, and pump shut-off
- Severe-duty wear bar kit
- Remote packer lube kit
- Greaseless tailgate hinge and lift cylinders
- Hydraulic oil temperature sensor with alarm
- Body hydraulic pressure sensor
- Shovel kit mounted on back of the packer
- Arm / Fork overweight warning kit
- Backup and license plate light
- LED center-mounted brake light
- LED duplicate high and low mount stop, turn, and tail lights
- LED mid-body turn signals
- Strobe light, amber mounted on lower tailgate - in-cab switch, pump on, and reverse activated
- Front and rear mud flaps - anti-sail / anti-splash
- Rear underride guard
- 20 lb. fire extinguisher
- FMVSS #108 clearance lights & reflectors
- ICC reflective tape
- Rear camera bracket and flood lights - reverse activated
- Body undercoating
- Customer's choice of one color finish paint from Color Smart brochure
- Standard 1-year warranty (2,000 Hours of Operation)
- ANSI Z 245.1-2012 compliant
- Safety triangle
- Cavity coat and joint sealer

Effective December 1, 2017 Freedom Sales Order Form

Base Units Freedom			
☐	20 cubic yard		$128,705
☐	23 cubic yard		$128,170
☐	28 cubic yard		$128,705
☐	Service Hoist Kit	B9	$4,385
Hopper Size			12 yd³
CHASSIS MUST COMFORM WITH HEIL'S MOST CURRENT CHASSIS SPECIFICATIONS AT WWW.HEIL.COM			
* NOTE: Red numbers reference Option Photo Index			
Mounting Options			
☐	Full Factory Mount for Service Hoist or Serviceable Eject - Includes Body Props and Rear Pivot		$5,505
☐	Mount at Dealer Destination		$735
Power Take Off / Pump Options			
☐	Front Mount Vane Pump		STD
☐	Operate at Idle (OAI) Front Mount Tandem Vane Pump		$3,750
☐	890 Hot Shift PTO with Single Vane Pump		$3,735
☐	897 Constant Duty PTO with Single Vane Pump		$3,735
Commercial Gripper Option			
☐	Commercial Gripper attachment to the fork cross shaft to service 32-96 gallon residential containers (Commercial Grabbers add 6.5" of overall height when arms are fully raised and forks fully tucked)		$7,035
Control Options			
☐	Left Hand Lever In-Cab Air Controls in lieu of Joystick	CE6	$250
☐	Outside Air Lever Controls Kit (arms, forks and packer) with Throttle Advance	CE5	$2,335
Lighting and Electrical Accessories			
☐	Single Led Hopper Mounted Container Work light		$590
☐	Multi-Function (SMART) LED Strobe / Turn Lamps		$610
☐	Body Side Backing Assist Lights - LED		$505
☐	Dual Cab Guard Mounted Flood Lights		$1,055
☐	Dual LED Cab Mounted Oval Strobe Lights		$495
☐	Dual Oval Flat LED Strobes Mounted Mid-T/G - in-cab switch, pump on, and reverse activated	L15	$1,055
Camera Systems			
All camera systems are mounted with protective camera brackets and twin tailgate flood lights			
CAMERA MONITOR LOCATION WILL BE CAB ROOF MOUNTED Swivel monitor bracket will be provided for dual drive chassis			
360 ° Camera Systems and Options			
☐	360 Degree Camera Package - Includes 360 degree camera system (4 camera), DVR capability, Dash Camera, Operator Facing Camera, and Hopper Camera.		$10,260
☐	360 Base Camera System - Includes 360 (4 Camera System) for Monitoring Only		$8,440
☐	Add DVR for Recording Function - Includes Dash Camera for Road Facing View		$1,680
☐	Add Operator Facing Camera for Operator Monitoring		$385
☐	Add Hopper Camera		$1,035

Effective December 1, 2017 Freedom Sales Order Form

	3rd Eye Camera Systems		
☐	3rd Eye Single Camera System with Single Camera Mounted on Tailgate		$1,580
☐	3rd Eye Double Camera System (Cameras on T/G & LH Cab)		$2,030
☐	3rd Eye Double Camera System (Cameras on T/G & RH Cab)		$2,030
☐	3rd Eye Double Camera System (Cameras on T/G & RH Alley)		$2,030
	3rd Eye Double Camera System (Cameras on T/G & Hopper)		$2,030
	Auxiliary Axles Options		
	* NOTE: All axles MUST BE installed with tires so chassis can be re-certified to new GAWR and GVWR ratings		
☐	Watson & Chalin Self Steering Pusher Axle: 13,000 pound capacity, hub piloted or 20" spoke wheel hubs, automatic slack adjusters, type 16 air chambers, steering stabilizer kit and reverse lift kit		$14,145
☐	Watson & Chalin Self Steering Tag Axle: 13,000 pound capacity, hub piloted or 20" spoke wheel hubs, automatic slack adjusters, type 16 air chambers, steering stabilizer kit and reverse lift kit, includes Tag Axle Spill Shield		$14,455
☐	Watson & Chalin Rigid Pusher Axle: 25,000 pound capacity, hub piloted or 20" spoke wheel hubs, 30/30 brake chambers, automatic slack adjusters, 1,300 cubic inch air tank and regulator kit		$10,835
☐	Watson & Chalin Rigid Tag Axle: 25,000 pound capacity, hub piloted or 20" spoke wheel hubs, 30/30 brake chambers, automatic slack adjusters, 1,300 cubic inch air tank and regulator kit, includes Tag Axle Spill Shield		$11,150
* Note: All auxiliary applications must be approved by Heil prior to order acceptance			
	Auxiliary Axle Tire Options		
☐	255/70R-22.5 - Qty(2) load range H, 5,510 pound single max load at 120 psi with rims		$2,240
☐	275/70R-22.5 - Qty(2) load range H, 7,000 pound single max load at 120 psi with rims		$2,835
☐	11 R-22.5 - Qty(2) load range H, 6,610 pound single max load at 120 psi with rims		$2,390
	Body Options		
☐	Sliding Top Door - Aluminum - May not be compatible with roof mounted CNG system	B28	$4,855
☐	Tailgate Mounted Roof Access Ladder (Only one selection allowed) Not Available with CNrG Tailgate option		$1,345
☐	Curbside Mounted Roof Access Ladder (Only one selection allowed)		$1,345
☐	High Pressure Filter Kit	B3	$900
☐	High Pressure Filter Monitor		$670
☐	60 Gallon Washout Tank - side mounted - Not available with pusher axle	B10	$2,025
☐	60 Gallon Washout Tank - rear mounted - Not available with tag axle		$2,025
☐	Second 20 lb. Fire Extinguisher		$495
☐	Tool Box Bumper Mount - Steel	B6	$765
☐	Tool Box Bumper Mount - Aluminum		$905
☐	Rear Caution Decal		$285
☐	Wheel Chock Kit - Dual		$160
☐	Fall Protection Kit		$3,400
☐	D-Ring Fall Protection		$825
☐	Hydraulic Oil Tank Quick Disconnect Kit - For use with filter buggy		$815
☐	Perma Coat on Cab Protector		$590
☐	Spill Kit		$340
☐	Packer Mounted Retainer Teeth		$725
☐	Hydraulic Oil Tank Heater - 500 watts		$1,185
☐	Fender Extension Kit		$725
☐	California Back Up Alarm		$675
☐	Infinity Series Packer/Eject Cylinders with scrapers and hardened rods to 50 HRC Includes Five (5) Year Packer/Eject Cylinder Warranty covering dents and dings		$3,055

Effective December 1, 2017 Freedom Sales Order Form

	CNrG Tailgate Mounted CNG - Includes Installation Fee		
☐	60 DGE CNG System		$40,425
☐	75 DGE CNG System		$42,110
☐	90 DGE CNG System		$47,865
☐	105 DGE CNG System		$54,670
	FET Exempt CNrG Tailgate Mounted CNG For 20YD Bodies Only- Includes Installation Fee		
☐	60 DGE CNG System		$ 42,925
☐	75 DGE CNG System		$ 44,610
☐	90 DGE CNG System		$ 50,365
☐	105 DGE CNG System		$ 57,170
	CNrG Options		
☐	Front Bumper Fill with Kill Cap		$1,250
☐	Defuel Transfer Hose - 35 ft.		$1,995
	CNG Installation - Top of Body Installation		
☐	CNG Installation Charge - Includes brackets, temporary tank rental, hardware, and mounting of CNG system		$5,625
	Extended Complete Body Warranty Options		
☐	Two (2) Year (Months 13-24) (Maximum 4,000 hrs. of Operation) Complete Heil Body Warranty Requires additional purchase of Infinity packer/eject cylinders from above		$4,400
☐	Three (3) Year (Months 13-36) (Maximum 6,000 hrs. of Operation) Complete Heil Body Warranty Requires additional purchase of Infinity packer/eject cylinders from above		$7,550
☐	Four (4) Year (Months 13-48) (Maximum 8,000 hrs. of Operation) Complete Heil Body Warranty Requires additional purchase of Infinity packer/eject cylinders from above		$10,635
☐	Five (5) Year (Months 13-60) (Maximum 10,000 hrs. of Operation) Complete Heil Body Warranty Requires additional purchase of Infinity packer/eject cylinders from above		$14,255
	Extended Cylinder Warranty Options		
☐	Two (2) Year (Months 13-24) (Maximum 4,000 hrs. of Operation) All other Non-Infinity Cylinder Warranty - Requires additional purchase of Infinity packer/eject cylinders from above		$970
☐	Three (3) Year (Months 13-36) (Maximum 6,000 hrs. of Operation) All other Non-Infinity Cylinder Warranty - Requires additional purchase of Infinity packer/eject cylinders from above		$1,945
☐	Four (4) Year (Months 13-48) (Maximum 8,000 hrs. of Operation) All other Non-Infinity Cylinder Warranty - Requires additional purchase of Infinity packer/eject cylinders from above		$2,915
☐	Five (5) Year (Months 13-60) (Maximum 10,000 hrs. of Operation) All other Non-Infinity Cylinder Warranty - Requires additional purchase of Infinity packer/eject cylinders from above		$3,395
	Paint Options		
	NOTE: LIST PAINT CODES ON PAINT DIAGRAM		
☐	Customized Paint Color - Paint Color Code NOT included in the Color Smart Brochure		$390
☐	Two Tone Paint		$1,485
☐	Paint Striping - first stripe		$1,250
☐	Paint Striping - each additional stripe		$695
☐	Metallic Paint		$5,000
☐	Clear coat Finish		$1,735
☐	Anti-Graffiti Clear coat Finish		$2,500
☐	Prime Paint Only - deduct		($1,220)
	TOTALS		
	Total from Options Above (MSRP)		**$0**
	Additional Options (Custom's, Chassis Mods, Etc.) Total		
	Subtotal		**$0**
	Dealer Discount (%)	**0%**	**$0**
	Dealer Net Price		**$0**
	Additional Discount (SPR)		
	Freight		
	Total Price per Unit		**$0**

HALF/PACK® FREEDOM

Paint Stripe & Accessories Requirements

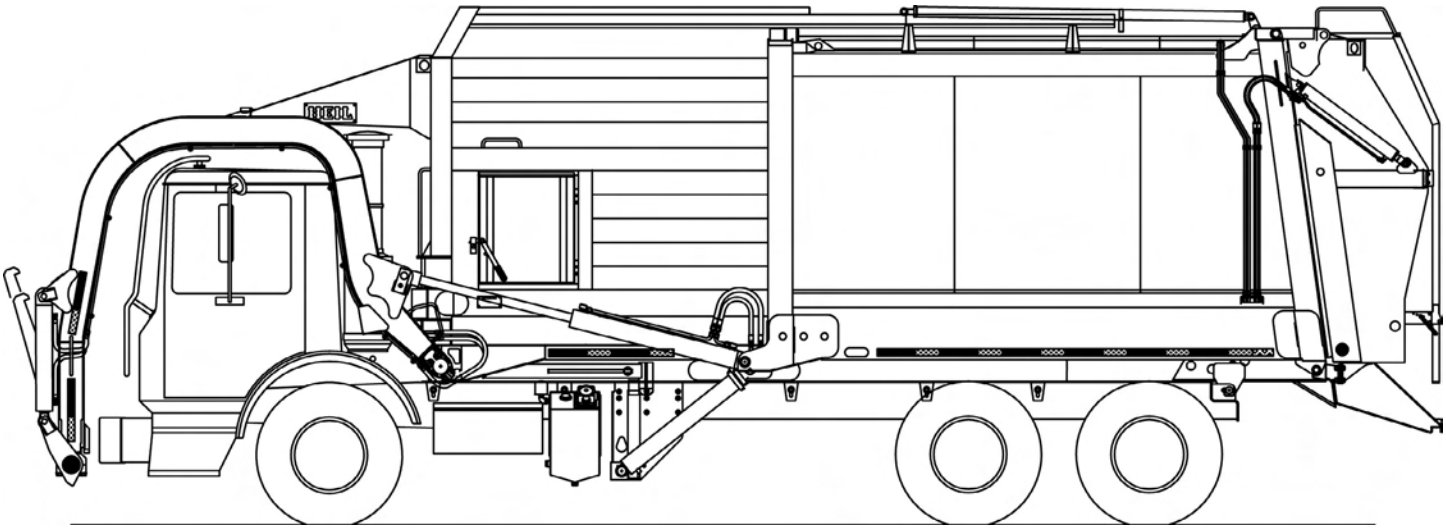

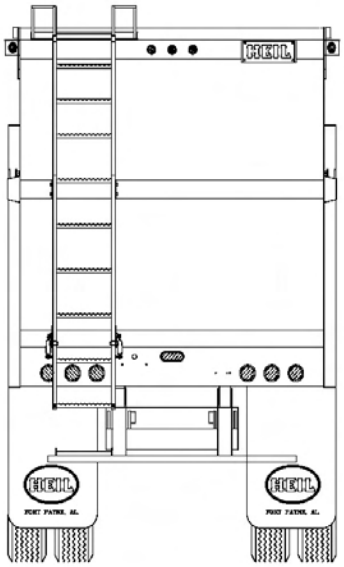

PAINT AND OPTIONS LAYOUT DETAIL
USE THIS FORM TO DESCRIBE PAINT SCHEMES
BE SPECIFIC ABOUT DIMENSIONS AND DETAILS

Sales Order #		Submitted by	
Customer			
Paint Color 1			
Paint Color 2			
Paint Color 3			
Chassis Make			
Chassis Model			
Wheelbase			
Body Size		Approved by	

Half/Pack®

Featuring Odyssey™ controls

**Curotto-Can automated carry can sold separately

Standard Equipment Features included in Base Price

- Hinged and completely sealed aluminum left-side body access door with step and grab handle
- Cab shield with hinged rubber tip extension - steel
- Front head closure screen with splash guard
- Under hopper liquid sump with 2 clean-out doors
- Body service props for service hoist models and service lift
- Tailgate service props
- Fully automatic Shur-Lock™ tailgate latches
- Clamp-on arms
- 8,000 lb. capacity arms - WASTEC WRP 06-1996 rated
- Four arm shaft bearing supports
- Fork cross shaft rubber bumpers
- Bolt-on rubber arm stops
- Heavy-duty forks - 1 1/2" thick x 63" grip length
- Chrome-plated cylinder rods and telescopic sleeves
- Crossed packing cylinders
- Chassis frame-mounted oil tank with level / temperature gauge and suction shut-off valve
- 3-micron return line filter with magnetic trap and in-cab filter bypass monitor
- 100-micron suction line strainer
- Abrasion-resistant hydraulic hoses
- Cortex Controller ™ with InSight™ diagnostic display with integrated 3rd Eye camera feed
- Throttle advance / throttle limit kit
- Left and right-hand single multifunction joystick
- Complete array of in-cab function indicator lights
- Streetwise Hydraulics™
- Solid-state control panel
- High-pressure filter kit
- Arm rest for operator controls
- 5 lb. in-cab fire extinguisher
- Backup alarm
- LED mid-body turn signals
- Strobe light, amber mounted on lower tailgate - in-cab switch, pump on, and reverse activated
- Front and rear mud flaps - anti-sail / anti-splash
- Rear underride guard
- Hopper floodlight
- Tailgate lock & closed indicator sensor with in-cab indicator and alarm
- Low oil level sensor with light, buzzer, and pump shut-off
- Severe-duty wear bar kit
- 3" sump drain on street side and curb side
- Arm/fork overheight warning kit
- PTO mounted load sense piston pump with hot shift PTO
- Hydraulic arm tube covers
- Remote I/O for tailgate valve and Curotto-Can
- Greaseless tailgate hinge and lift cylinders
- Hydraulic oil temperature sensor with alarm
- Body hydraulic pressure sensor
- 20 lb. fire extinguisher
- FMVSS #108 clearance lights and reflectors
- ICC reflective tape
- Rear camera bracket and flood lights - reverse activated
- Body undercoating
- Customer's choice of one color finish paint from Color Smart brochure
- Standard 1-year warranty (2,000 Hours of Operation)
- ANSI Z 245.1-2012 compliant
- Safety triangle
- Arm guides mounted to front bumper
- Forward-facing floodlights on cab
- Upper arm reinforcement

Effective December 1, 2017 HP Odyssey Residential Sales Order Form

Base Units HP Odyssey Residential			
☐	20 cubic yard		$129,815
☐	23 cubic yard		$129,290
☐	28 cubic yard		$129,920
☐	**Service Hoist Kit** - 187" Wheelbase 5 Axle Units WILL NOT accept the service hoist option*	B9	$4,385
	*5 Axle 187" Wheelbase - Hendrickson Auxiliary Axles Only with 275/R70/22.5 or smaller tires.		
Hopper Size			12 yd³
CHASSIS MUST COMFORM WITH HEIL'S MOST CURRENT CHASSIS SPECIFICATIONS AT WWW.HEIL.COM			
* NOTE: Red numbers reference Option Photo Index			
Mounting Options			
☐	Full Factory Mount for Service Hoist or Serviceable Eject - Includes Body Props and Rear Pivot		$5,505
☐	Mount at Dealer Destination		$735
Power Take Off / Pump Options			
☐	PTO Mounted Load Sense Piston pump - Includes PTO		STD
Automated Option			
☐	Hopper Seal Brush Kit - Includes Sides, Front, and Rear Bristle Hopper Seal Kit - For Curotto Only		$2,565
☐	Remote Curbside Curotto Can Controls		$1,545
☐	Installation of Auto cover controls - Auto cover must be purchased with the Curotto Can		$1,545
☐	In-Cab controls for integrated forward work lamps - Forward Work lamps must be purchased with the Curotto Can		$625
☐	Hose Conversion Kit - Must be selected if utilizing a Curroto Can Built prior to 1/1/2018		STD If Needed
Semi-Automated Option			
☐	Carry Can Control Kit - Must Select to Add Controls to Order		$0
☐	Bayne Carry Can Control Kit - Must Select to Add Controls to Order		$0
A complete selection of premium Bayne carry cans to suit any application is provided in this price book for your convenience			
Control Options			
☐	Dual Multifunction Joystick - Left and Right Hand		STD
☐	Left Hand 2-Lever Electric Control in lieu of Multifunction Joystick	CE6	$535
☐	Left Hand Single Axis Joystick Electric Control in lieu of Multifunction Joystick		$535
☐	Streetside mounted Outside 4 Button Electric Rocker Switch Controls for Arms, Forks, and Packer circuits. (Throttle Advance Not Included)		$1,960
☐ ###	Streetside mounted Outside Dual Lever controls and 4 Button Electric Rocker Switch Controls for Pump Enable, Arms, Forks, and Packer circuits. Includes Throttle advance.		$2,336
Lighting and Electrical Accessories			
☐	Single Led Hopper Mounted Container Work light		$590
☐	Multi-Function (SMART) Lights		$610
☐	Body Side Backing Assist Lights - LED		$505
☐	Dual Oval Flat LED Strobes Mounted Mid-T/G - in-cab switch, pump on, and reverse activated	L15	$1,055
Camera Systems			
All camera systems are mounted with protective camera brackets and twin tailgate flood lights.			
CAMERA MONITOR LOCATION WILL BE CAB ROOF MOUNTED Swivel monitor bracket will be provided for dual drive chassis			
360 ° Camera Systems and Options			
☐	360 Degree Camera Package - Includes 360 degree camera system (4 camera), DVR capability, Dash Camera, Operator Facing Camera, and Hopper Camera.		$10,260
☐	360 Base Camera System - Includes 360 (4 Camera System) for Monitoring Only		$8,440
☐	Add DVR for Recording Function - Includes Dash Camera for Road Facing View		$1,680
☐	Add Operator Facing Camera for Operator Monitoring		$385
☐	Add Hopper Camera		$1,035
3rd Eye Camera Systems			
☐	3rd Eye Single Camera System with Single Camera Mounted on Tailgate		$1,580
☐	3rd Eye Double Camera System (Cameras on T/G & LH Cab)		$2,030
☐	3rd Eye Double Camera System (Cameras on T/G & RH Cab)		$2,030
☐	3rd Eye Double Camera System (Cameras on T/G & RH Alley)		$2,030
☐	3rd Eye Double Camera System (Cameras on T/G & Hopper)		$2,030

	Load Cell Scale Systems		
☐	Heil Optimum Payload System (HOPS) using Air-Weigh Axle Scales	CE20	$8,740
☐	Air-Weigh Axle Scale System without Interlock	CE20	$8,155
	Auxiliary Axle Options		
	* NOTE: All axles MUST BE installed with tires so chassis can be re-certified to new GAWR and GVWR ratings		
☐	Watson & Chalin Self Steering Pusher Axle: 13,000 pound capacity, hub piloted or 20" spoke wheel hubs, automatic slack adjusters, type 16 air chambers, steering stabilizer kit and reverse lift kit -		$14,145
☐	Watson & Chalin Self Steering Tag Axle: 13,000 pound capacity, hub piloted or 20" spoke wheel hubs, automatic slack adjusters, type 16 air chambers, steering stabilizer kit and reverse lift kit, includes Tag Axle Spill Shield		$14,455
☐	Watson & Chalin Rigid Pusher Axle: 25,000 pound capacity, hub piloted or 20" spoke wheel hubs, 30/30 brake chambers, automatic slack adjusters, 1,300 cubic inch air tank and regulator kit		$10,835
☐	Watson & Chalin Rigid Tag Axle: 25,000 pound capacity, hub piloted or 20" spoke wheel hubs, 30/30 brake chambers, automatic slack adjusters, 1,300 cubic inch air tank and regulator kit, includes Tag Axle Spill Shield		$11,150
	* Note: All auxiliary applications must be approved by Heil prior to order acceptance		
	Auxiliary Axle Tire Options		
☐	255/70R-22.5 - Qty(2) load range H, 5,510 pound single max load at 120 psi with rims		$2,240
☐	275/70R-22.5 - Qty(2) load range H, 7,000 pound single max load at 120 psi with rims		$2,835
☐	11 R-22.5 - Qty(2) load range H, 6,610 pound single max load at 120 psi with rims		$2,390
	Body Options		
☐	Heavy Duty Sliding Top door - May not be compatible with roof mounted CNG systems		$4,855
☐	Tailgate Mounted Roof Access Ladder (Only one selection allowed) Not Available with CNrG Tailgate option		$1,345
☐	Curbside Mounted Roof Access Ladder (Only one selection allowed)		$1,345
☐	Hopper Floor Liner (3/16" - AR400)		$1,795
☐	Hopper Floor Liner (1/4" - AR400)		$2,855
☐	Body Roof Retainer Teeth - 2 rows at front of body - Minimizes spring back in cardboard and recycling applications	B26	$1,040
☐	High Pressure Filter Kit	B3	STD
☐	High Pressure Filter Monitor		$670
☐	Second 20 lb. Fire Extinguisher		$495
☐	Tool Box Bumper Mount - Steel	B6	$765
☐	Tool Box Bumper Mount - Aluminum		$905
☐	Extendable Broom Kit - Mounted on hopper side		$410
☐	Cab Protector Extension Raise - Manual Jack		$1,140
☐	Rear Caution Decal		$285
☐	Wheel Chock Kit - Dual		$160
☐	Fall Protection Kit		$3,400
☐	D-Ring Fall Protection		$825
☐	Hydraulic Oil Tank Quick Disconnect Kit - For use with filter buggy		$815
☐	Perma Coat on Cab Protector		$590
☐	Hydraulic Raise Cab Protector Kit		$5,335
☐	Spill Kit		$340
☐	Packer Mounted Retainer Teeth		$725
☐	Hydraulic Oil Tank Heater - 500 watts		$1,185
☐	Fender Extension Kit		$725
☐	California Back Up Alarm		$675
☐	**Infinity Series Packer/Eject Cylinders** with scrapers and hardened rods to 50 HRC - Includes Five (5) Year Packer/Eject Cylinder Only Warranty that covers dents and dings (This Option is Required if purchasing extended warranty's below)		$3,055
☐	**Lightning Cylinder Package**: reduces front loader arm cycle time by up to 5 seconds and reduces front loader arm lifting capacity to a maximum of 5,500 lbs. This package is available via Custom request only, and also requires an End User signed waiver acknowledging the reduced arm lifting capacity of these cylinders.		(Custom Required)

Effective December 1, 2017 HP Odyssey Residential Sales Order Form

	CNrG Tailgate Mounted CNG - Includes Installation Fee		
☐	60 DGE CNrG System		$40,425
☐	75 DGE CNrG System		$42,110
☐	90 DGE CNrG System		$47,865
☐	105 DGE CNrG System		$54,670
	FET Exempt CNrG Tailgate Mounted CNG For 20YD Bodies Only- Includes Installation Fee		
☐	60 DGE CNG System		$ 42,925
☐	75 DGE CNG System		$ 44,610
☐	90 DGE CNG System		$ 50,365
☐	105 DGE CNG System		$ 57,170
	CNrG Options		
☐	Front Bumper Fill with Kill Cap		$1,250
	CNG Installation - Top of Body Installation		
☐	CNG Installation Charge - Includes brackets, temporary tank rental, hardware, and mounting of CNG system		$5,625
	Extended Complete Body Warranty Options		
☐	Two (2) Year (Months 13-24) (Maximum 4,000 hrs. of Operation) Complete Heil Body Warranty Requires additional purchase of Infinity packer/eject cylinders from above		$4,400
☐	Three (3) Year (Months 13-36) (Maximum 6,000 hrs. of Operation) Complete Heil Body Warranty Requires additional purchase of Infinity packer/eject cylinders from above		$7,550
☐	Four (4) Year (Months 13-48) (Maximum 8,000 hrs. of Operation) Complete Heil Body Warranty Requires additional purchase of Infinity packer/eject cylinders from above		$10,635
☐	Five (5) Year (Months 13-60) (Maximum 10,000 hrs. of Operation) Complete Heil Body Warranty Requires additional purchase of Infinity packer/eject cylinders from above		$14,255
	Extended Cylinder Warranty Options		
☐	Two (2) Year (Months 13-24) (Maximum 4,000 hrs. of Operation) All other Non-Infinity Cylinder Warranty - Requires additional purchase of Infinity packer/eject cylinders from above		$970
☐	Three (3) Year (Months 13-36) (Maximum 6,000 hrs. of Operation) All other Non-Infinity Cylinder Warranty - Requires additional purchase of Infinity packer/eject cylinders from above		$1,945
☐	Four (4) Year (Months 13-48) (Maximum 8,000 hrs. of Operation) All other Non-Infinity Cylinder Warranty - Requires additional purchase of Infinity packer/eject cylinders from above		$2,915
☐	Five (5) Year (Months 13-60) (Maximum 10,000 hrs. of Operation) All other Non-Infinity Cylinder Warranty - Requires additional purchase of Infinity packer/eject cylinders from above		$3,395
	Paint Options		
	NOTE: LIST PAINT CODES ON PAINT DIAGRAM		
☐	Customized Paint Color - Paint Color Code NOT included in the Color Smart Brochure		$390
☐	Two Tone Paint		$1,485
☐	Paint Striping - first stripe		$1,250
☐	Paint Striping - each additional stripe		$695
☐	Metallic Paint		$5,000
☐	Clear coat Finish		$1,735
☐	Anti-Graffiti Clear coat Finish		$2,500
☐	Prime Paint Only - deduct		($1,220)
	TOTALS		
	Total from Options Above (MSRP)		**$0**
	Additional Options (Custom's, Chassis Mods, Etc.) Total		
	Subtotal		**$0**
	Dealer Discount (%)	**0%**	**$0**
	Dealer Net Price		**$0**
	Additional Discount (SPR)		
	Freight		
	Total Price per Unit		**$0**

HP ODYSSEY RESIDENTIAL

Paint Stripe & Accessories Requirements

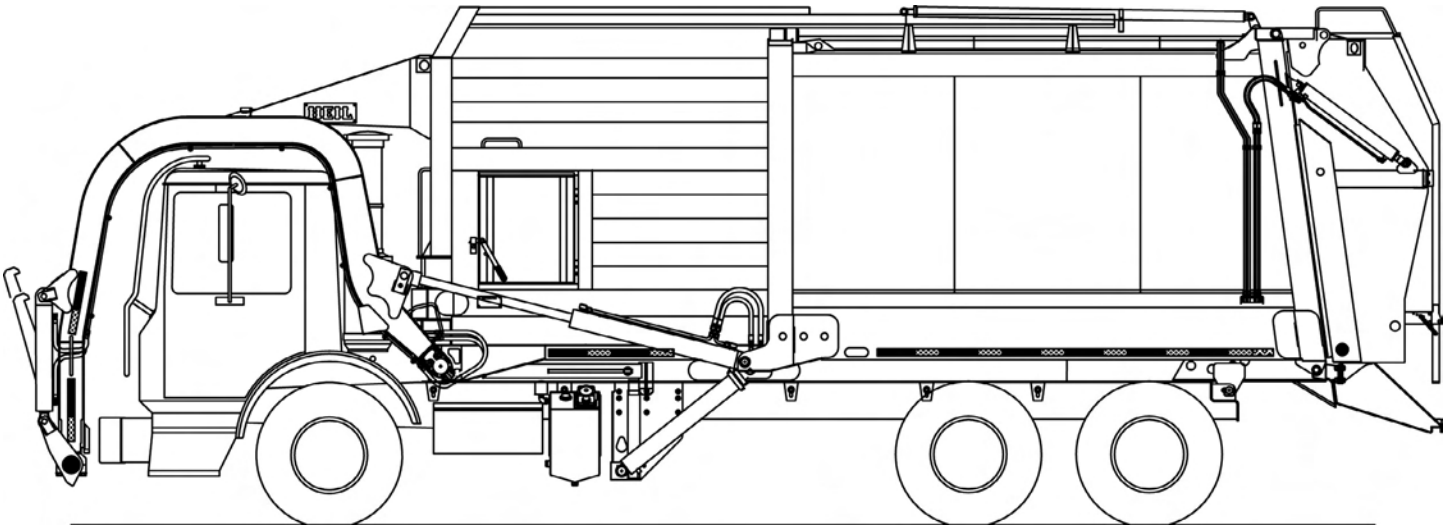

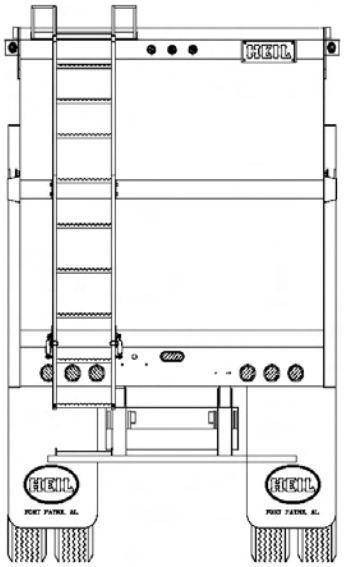

PAINT AND OPTIONS LAYOUT DETAIL
USE THIS FORM TO DESCRIBE PAINT SCHEMES
BE SPECIFIC ABOUT DIMENSIONS AND DETAILS

Sales Order #		Submitted by	
Customer			
Paint Color and Code 1			
Paint Color and Code 2			
Paint Color and Code 3			
Chassis Make			
Chassis Model			
Wheelbase			
Body Size		Approved by	

Half/Pack® Sierra

Featuring Odyssey™ controls

**Curotto-Can automated carry can sold separately

Standard Equipment Features included in Base Price

- Hinged and completely sealed aluminum left-side body access door with step and grab handle
- Full aluminum cab shield with air cylinder assisted raise
- Under hopper liquid sump with 2 clean-out doors
- Body service props for service hoist models and service lift
- Tailgate service props
- Fully automatic Shur-Lock™ tailgate latches
- Clamp-on arms
- 8,000 lb. capacity arms - WASTEC WRP 06-1996 rated
- Four arm shaft bearing supports
- Fork cross shaft rubber bumpers
- Bolt-on rubber arm stops
- Heavy-duty forks - 1 1/2" thick x 59" grip length
- Crossed packing cylinders
- Chrome-plated cylinder rods and telescopic sleeves
- Chassis frame-mounted oil tank with level / temperature gauge and suction shut-off valve
- 3-micron return line filter with magnetic trap and in-cab filter bypass monitor
- 100-micron suction line strainer
- Abrasion-resistant hydraulic hoses
- Cortex Controller ™ with InSight™ diagnostic display with integrated 3rd Eye camera feed
- Throttle advance / throttle limit kit
- Electronic joystick controls
- Complete array of in-cab function indicator lights
- 5 lb. in-cab fire extinguisher
- Tailgate lock & closed indicator sensor with in-cab indicator and alarm
- PTO mounted load sense piston pump with hot shift PTO
- Hydraulic arm tube covers
- Remote I/O for tailgate valve and Curotto-Can
- Greaseless tailgate hinge and lift cylinders
- Hydraulic oil temperature sensor with alarm
- Body hydraulic pressure sensor
- Streetwise Hydraulics™
- Backup alarm
- Hopper floodlight
- Severe-duty wear bar kit
- 3" sump drain on street side and curb side
- Remote packer lube kit
- Shovel kit mounted on back of the packer
- Arm / fork over height warning kit
- Backup and license plate light
- LED center-mounted brake light
- LED duplicate high and low mount stop, turn, and tail lights
- LED mid-body turn signals
- Strobe light, amber mounted on lower tailgate - in-cab switch, pump on, and reverse activated
- Front and rear mud flaps - anti-sail / anti-splash
- Rear underride guard
- 20 lb. fire extinguisher
- FMVSS #108 clearance lights and reflectors
- ICC reflective tape
- Rear camera bracket and flood lights - reverse activated
- Body undercoating
- Customer's choice of one color finish paint from Color Smart brochure
- Standard 1-year warranty (2,000 Hours of Operation)
- ANSI Z 245.1-2012 compliant
- Forward-facing floodlights on cab
- Upper arm reinforcement
- Arm guides mounted on front bumper
- High pressure filter

Effective December 1, 2017 Sierra Odyssey Residential Sales Order Form

Base Units Sierra Odyssey Residential			
☐	28 cubic yard		$138,975
☐	Service Hoist Kit - 187" Wheelbase 5 Axle Units WILL NOT accept the service hoist option*	B9	$4,385
	*5 Axle 187" Wheelbase - Hendrickson Auxiliary Axles Only with 275/R70/22.5 or smaller tires.		
Hopper Size			12 yd³
CHASSIS MUST COMFORM WITH HEIL'S MOST CURRENT CHASSIS SPECIFICATIONS AT WWW.HEIL.COM			
* NOTE: Red numbers reference Option Photo Index			
Mounting Options			
☐	Full Factory Mount for Service Hoist or Serviceable Eject - Includes Body Props and Rear Pivot		$5,505
☐	Mount at Dealer Destination		$735
Power Take Off / Pump Options			
☐	PTO Mounted Load Sense Piston pump - Includes PTO		STD
Automated Option			
☐	Hopper Seal Brush Kit - Includes Sides, Front, and Rear Bristle Hopper Seal Kit - For Curotto Only		$2,565
☐	Remote Curbside Curotto Can Controls		$1,545
☐	Installation of Auto cover controls - Auto cover must be purchased with the Curotto Can		$1,545
☐	In-Cab controls for integrated forward work lamps - Forward Work lamps must be purchased with the Curotto Can		$625
☐	Hose Conversion Kit - Must be selected if utilizing a Curroto Can Built prior to 1/1/2018		STD If Needed
Semi-Automated Option			
☐	Carry Can Control Kit - Must Select to Add Controls to Order		$0
A complete selection of premium Bayne carry cans to suit any application is provided in this price book for your convenience			
Control Options			
☐	Dual Multifunction Joystick - Left and Right Hand		STD
☐	Left Hand 2-Lever Electric Control in lieu of Multifunction Joystick	CE6	$535
☐	Left Hand Single Axis Joystick Electric Control in lieu of Multifunction Joystick		$535
☐	Streetside mounted Outside 4 Button Electric Rocker Switch Controls for Arms, Forks, and Packer circuits. (Throttle Advance Not Included)		$1,960
☐	Streetside mounted Outside Dual Lever controls and 4 Button Electric Rocker Switch Controls for Pump Enable, Arms, Forks, and Packer circuits. Includes Throttle advance.		$2,335
Lighting and Electrical Accessories			
☐	Single Led Hopper Mounted Container Work light		$590
☐	Multi-Function (SMART) LED Strobe / Turn Lamps		$610
☐	Body Side Backing Assist Lights - LED		$505
☐	Dual Oval Flat LED Strobes Mounted Mid-T/G - in-cab switch, pump on, and reverse activated	L15	$1,055
☐	Dual Cab Guard Mounted Flood Lights		$495
Camera Systems			
All camera systems are mounted with protective camera brackets and twin tailgate flood lights.			
CAMERA MONITOR LOCATION WILL BE CAB ROOF MOUNTED Swivel monitor bracket will be provided for dual drive chassis			
360 ° Camera Systems and Options			
☐	360 Degree Camera Package - Includes 360 degree camera system (4 camera), DVR capability, Dash Camera, Operator Facing Camera, and Hopper Camera.		$10,260
☐	360 Base Camera System - Includes 360 (4 Camera System) for Monitoring Only		$8,440
☐	Add DVR for Recording Function - Includes Dash Camera for Road Facing View		$1,680
☐	Add Operator Facing Camera for Operator Monitoring		$385
☐	Add Hopper Camera		$1,035

Effective December 1, 2017 Sierra Odyssey Residential Sales Order Form

3rd Eye Camera Systems			
☐	3rd Eye Single Camera System with Single Camera Mounted on Tailgate		$1,580
☐	3rd Eye Double Camera System (Cameras on T/G & LH Cab)		$2,030
☐	3rd Eye Double Camera System (Cameras on T/G & RH Cab)		$2,030
☐	3rd Eye Double Camera System (Cameras on T/G & RH Alley)		$2,030
☐	3rd Eye Double Camera System (Cameras on T/G & Hopper)		$2,030
Load Cell Scale Systems			
☐	Heil Optimum Payload System (HOPS) using Air-Weigh Axle Scales	CE20	$8,740
☐	Air-Weigh Axle Scale System without Interlock	CE20	$8,155
Auxiliary Axle Options			
* NOTE: All axles MUST BE installed with tires so chassis can be re-certified to new GAWR and GVWR ratings			
☐	Watson & Chalin Self Steering Pusher Axle: 13,000 pound capacity, hub piloted or 20" spoke wheel hubs, automatic slack adjusters, type 16 air chambers, steering stabilizer kit and reverse lift kit -		$14,145
☐	Watson & Chalin Self Steering Tag Axle: 13,000 pound capacity, hub piloted or 20" spoke wheel hubs, automatic slack adjusters, type 16 air chambers, steering stabilizer kit and reverse lift kit, includes Tag Axle Spill Shield		$14,455
☐	Watson & Chalin Rigid Pusher Axle: 25,000 pound capacity, hub piloted or 20" spoke wheel hubs, 30/30 brake chambers, automatic slack adjusters, 1,300 cubic inch air tank and regulator kit		$10,835
☐	Watson & Chalin Rigid Tag Axle: 25,000 pound capacity, hub piloted or 20" spoke wheel hubs, 30/30 brake chambers, automatic slack adjusters, 1,300 cubic inch air tank and regulator kit, includes Tag Axle Spill Shield		$11,150
* Note: All auxiliary applications must be approved by Heil prior to order acceptance			
Auxiliary Axle Tire Options			
☐	255/70R-22.5 - Qty(2) load range H, 5,510 pound single max load at 120 psi with rims		$2,240
☐	275/70R-22.5 - Qty(2) load range H, 7,000 pound single max load at 120 psi with rims		$2,835
☐	11 R-22.5 - Qty(2) load range H, 6,610 pound single max load at 120 psi with rims		$2,390
Body Options			
☐	Sliding Top Door - Aluminum - May not be compatible with roof mounted CNG system		$4,855
☐	Tailgate Mounted Roof Access Ladder (Only one selection allowed) Not Available with CNrG Tailgate option		$1,345
☐	Curbside Mounted Roof Access Ladder (Only one selection allowed)		$1,345
☐	Hopper Floor Liner (3/16" - AR400)		$1,795
☐	Hopper Floor Liner (1/4" - AR400)		$1,855
☐	Body Roof Retainer Teeth - 2 rows at front of body - Minimizes spring back in cardboard and recycling applications	B26	$1,040
☐	High Pressure Filter Kit	B3	STD
☐	High Pressure Filter Monitor		$670
☐	Second 20 lb. Fire Extinguisher		$495
☐	Tool Box Bumper Mount - Steel	B6	$765
☐	Tool Box Bumper Mount - Aluminum		$905
☐	Extendable Broom Kit - Mounted on hopper side		$410
☐	Rear Caution Decal		$285
☐	Wheel Chock Kit - Dual		$160
☐	Fall Protection Kit		$3,400
☐	D-Ring Fall Protection		$825
☐	Hydraulic Oil Tank Quick Disconnect Kit - For use with filter buggy		$815
☐	Perma Coat on Cab Protector		$590
☐	Hydraulic Raise Cab Protector Kit - Will Receive Steel Cab Shield in Lieu of Aluminum		$5,335
☐	Spill Kit		$340
☐	Packer Mounted Retainer Teeth		$725
☐	Hydraulic Oil Tank Heater - 500 watts		$1,185
☐	Fender Extension Kit		$725
☐	California Back Up Alarm		$675

☐	**Infinity Series Packer/Eject Cylinders** with scrapers and hardened rods to 50 HRC - Includes Five (5) Year Packer/Eject Cylinder Only Warranty that covers dents and dings (This Option is Required if purchasing extended warranty's below)		$3,055
☐	**Lightning Cylinder Package**: reduces front loader arm cycle time by up to 5 seconds and reduces front loader arm lifting capacity to a maximum of 5,500 lbs. This package is available via Custom request only, and also requires an End User signed waiver acknowledging the reduced arm lifting capacity of these cylinders.		(Custom Required)
	CNrG Tailgate Mounted CNG - Includes Installation Fee		
☐	60 DGE CNrG System		$40,425
☐	75 DGE CNrG System		$42,110
☐	90 DGE CNrG System		$47,865
☐	105 DGE CNrG System		$54,670
	CNrG Options		
☐	Front Bumper Fill with Kill Cap		$1,250
	CNG Installation - Top of Body Installation		
☐	CNG Installation Charge - Includes brackets, temporary tank rental, hardware, and mounting of CNG system		$5,625
	Extended Complete Body Warranty Options		
☐	Two (2) Year (Months 13-24) (Maximum 4,000 hrs. of Operation) Complete Heil Body Warranty Requires additional purchase of Infinity packer/eject cylinders from above		$4,400
☐	Three (3) Year (Months 13-36) (Maximum 6,000 hrs. of Operation) Complete Heil Body Warranty Requires additional purchase of Infinity packer/eject cylinders from above		$7,550
☐	Four (4) Year (Months 13-48) (Maximum 8,000 hrs. of Operation) Complete Heil Body Warranty Requires additional purchase of Infinity packer/eject cylinders from above		$10,635
☐	Five (5) Year (Months 13-60) (Maximum 10,000 hrs. of Operation) Complete Heil Body Warranty Requires additional purchase of Infinity packer/eject cylinders from above		$14,255
	Extended Cylinder Warranty Options		
☐	Two (2) Year (Months 13-24) (Maximum 4,000 hrs. of Operation) All other Non-Infinity Cylinder Warranty - Requires additional purchase of Infinity packer/eject cylinders from above		$970
☐	Three (3) Year (Months 13-36) (Maximum 6,000 hrs. of Operation) All other Non-Infinity Cylinder Warranty - Requires additional purchase of Infinity packer/eject cylinders from above		$1,945
☐	Four (4) Year (Months 13-48) (Maximum 8,000 hrs. of Operation) All other Non-Infinity Cylinder Warranty - Requires additional purchase of Infinity packer/eject cylinders from above		$2,915
☐	Five (5) Year (Maximum 10,000 hrs. of Operation) All other Non-Infinity Cylinder Warranty - Requires purchase of Infinity packer or eject Cylinders from above		$3,395
	Paint Options		
NOTE: LIST PAINT CODES ON PAINT DIAGRAM			
☐	Customized Paint Color - Paint Color Code NOT included in the Color Smart Brochure		$390
☐	Two Tone Paint		$1,485
☐	Paint Striping - first stripe		$1,250
☐	Paint Striping - each additional stripe		$695
☐	Metallic Paint		$5,000
☐	Clear coat Finish		$1,735
☐	Anti-Graffiti Clear coat Finish		$2,500
☐	Prime Paint Only - deduct		($1,220)
	TOTALS		
	Total from Options Above (MSRP)		**$0**
	Additional Options (Custom's, Chassis Mods, Etc.) Total		
	Subtotal		**$0**
	Dealer Discount (%)	**0%**	**$0**
	Dealer Net Price		**$0**
	Additional Discount (SPR)		
	Freight		
	Total Price per Unit		**$0**

SIERRA ODYSSEY RESIDENTIAL

Paint Stripe & Accessories Requirements

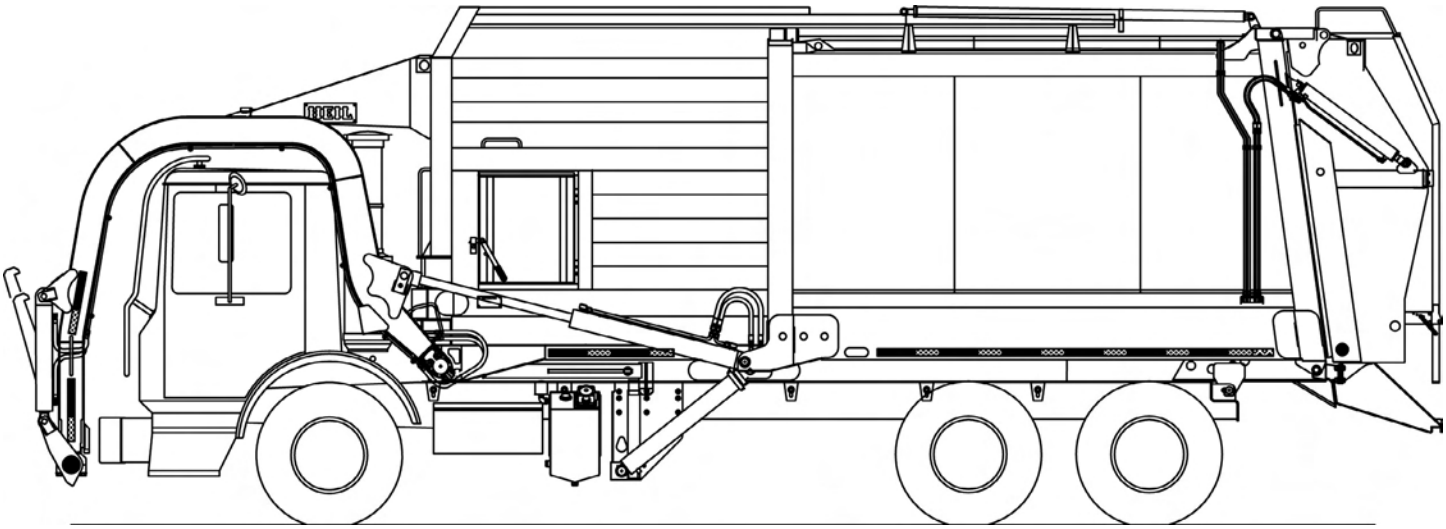

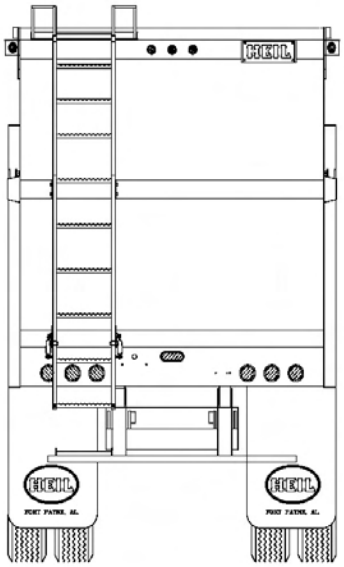

PAINT AND OPTIONS LAYOUT DETAIL
USE THIS FORM TO DESCRIBE PAINT SCHEMES
BE SPECIFIC ABOUT DIMENSIONS AND DETAILS

Sales Order #		Submitted by	
Customer			
Paint Color and Code 1			
Paint Color and Code 2			
Paint Color and Code 3			
Chassis Make			
Chassis Model			
Wheelbase			
Body Size		Approved by	

Half/Pack® Freedom

Featuring Odyssey™ controls

**Curotto-Can automated carry can sold separately

Standard Equipment Features included in Base Price

- Hinged and completely sealed left-side body access door with step and grab handle
- Full aluminum cab shield with air cylinder assisted raise
- 3" underbody gate valve on street side for liquid removal
- Front head closure screen with splash guard
- Body service props for service lift
- Tailgate service props
- Fully automatic Shur-Lock™ tailgate locks
- Clamp-on arms
- 8,000 lb. capacity arms - WASTEC WRP 06-1996 rated
- Four arm shaft bearing supports
- Bolt-on rubber arm stops
- Heavy-duty forks - 1" thick x 63" grip length
- Chrome-plated cylinder rods and telescopic sleeves
- Chassis frame-mounted aluminum oil tank with level / temperature gauge and suction shut-off valve
- 3-micron return line filter with magnetic trap and in-cab filter bypass monitor
- Heil Optimum Payload System - HOPS™
- 100-micron suction line strainer
- Abrasion-resistant hydraulic hoses
- Cortex Controller ™ with InSight™ diagnostic display with integrated 3rd Eye camera feed
- Throttle advance / throttle limit kit
- Left and right-hand single multifunction joystick
- Complete array of in-cab function indicator lights
- Arm rest for operator controls
- 5 lb. in-cab fire extinguisher
- Solid-state control panel
- Tailgate lock & closed indicator sensor with in cab indicator and alarm
- PTO Mounted Load Sense Piston Pump with Hot Shift PTO
- Hydraulic arm tube covers
- Remote I/O for tailgate valve and Curotto-Can
- Greaseless tailgate hinge and lift cylinders
- Hydraulic oil temperature sensor with alarm
- Body hydraulic pressure sensor
- Streetwise Hydraulics™
- Hopper flood light
- Low oil level sensor light, buzzer, and pump shut-off
- Severe-duty wear bar kit
- Remote packer lube kit
- Shovel kit mounted on back of the packer
- Arm / fork overweight warning kit
- Backup alarm, backup light and license plate light
- LED center-mounted brake light
- LED duplicate high and low mount stop, turn, and tail lights
- LED mid-body turn signals
- Strobe light, amber mounted on lower tailgate - in-cab switch, pump on, and reverse activated
- Front and rear mud flaps - anti-sail / anti-splash
- Rear underride guard
- 20 lb. fire extinguisher
- FMVSS #108 clearance lights & reflectors
- ICC reflective tape
- Rear camera bracket and flood lights - reverse activated
- Body undercoating
- Customer's choice of one color finish paint from Color Smart brochure
- Standard 1-year warranty (2,000 Hours of Operation)
- ANSI Z 245.1-2012 compliant
- Upper arm reinforcement
- High-pressure filter kit
- Arm guides mounted to front bumper

Effective December 1, 2017 Freedom Odyssey Residential Sales Order Form

Base Units Freedom Odyssey Residential			
☐	20 cubic yard		$144,015
☐	23 cubic yard		$143,495
☐	28 cubic yard		$144,015
☐	Service Hoist Kit - 187" Wheelbase 5 Axle Units WILL NOT accept the service hoist option*	B9	$4,385
	*5 Axle 187" Wheelbase - Hendrickson Auxiliary Axles Only with 275/R70/22.5 or smaller tires.		
Hopper Size			12 yd³
CHASSIS MUST COMFORM WITH HEIL'S MOST CURRENT CHASSIS SPECIFICATIONS AT WWW.HEIL.COM			
* NOTE: Red numbers reference Option Photo Index			
Mounting Options			
☐	Full Factory Mount for Service Hoist or Serviceable Eject - Includes Body Props and Rear Pivot		$5,505
☐	Mount at Dealer Destination		$735
Power Take Off / Pump Options			
☐	PTO Mounted Load Sense Piston pump - Includes PTO		STD
Residential Front Loader Options			
☐	Hopper Seal Brush Kit - Includes Sides, Front, and Rear Bristle Hopper Seal Kit - For Curotto Only		$2,565
☐	Remote Curbside Curotto Can Controls		$1,545
☐	Installation of Auto cover controls - Auto cover must be purchased with the Curotto Can		$1,545
☐	In-Cab controls for integrated forward work lamps - Forward Work lamps must be purchased with the Curotto Can		$625
☐	Hose Conversion Kit - Must be selected if utilizing a Curroto Can Built prior to 1/1/2018		STD If Needed
Semi-Automated Option			
☐	Carry Can Control Kit - Must Select to Add Controls to Order		$0
A complete selection of premium Bayne carry cans to suit any application is provided in this price book for your convenience			
Control Options			
☐	Dual Multifunction Joystick - Left and Right Hand		STD
☐	Left Hand 2-Lever Electric Control in lieu of Multifunction Joystick	CE6	$535
☐	Left Hand Single Axis Joystick Electric Control in lieu of Multifunction Joystick		$535
☐	Streetside mounted Outside 4 Button Electric Rocker Switch Controls for Arms, Forks, and Packer circuits. (Throttle Advance Not Included)		$1,960
☐	Streetside mounted Outside Dual Lever controls and 4 Button Electric Rocker Switch Controls for Pump Enable, Arms, Forks, and Packer circuits. Includes Throttle advance.		$2,335
Lighting and Electrical Accessories			
☐	Single Led Hopper Mounted Container Work light		$590
☐	Multi-Function (SMART) LED Strobe / Turn Lamps		$610
☐	Body Side Backing Assist Lights - LED		$505
☐	Dual Oval Flat LED Strobes Mounted Mid-T/G - in-cab switch, pump on, and reverse activated	L15	$1,055
☐	Dual Cab Guard Mounted Flood Lights		$495
Camera Systems			
All camera systems are mounted with protective camera brackets and twin tailgate flood lights			
CAMERA MONITOR LOCATION WILL BE CAB ROOF MOUNTED			
360 ˚ Camera Systems and Options			
☐	360 Degree Camera Package - Includes 360 degree camera system (4 camera), DVR capability, Dash Camera, Operator Facing Camera, and Hopper Camera.		$10,260
☐	360 Base Camera System - Includes 360 (4 Camera System) for Monitoring Only		$8,440
☐	Add DVR for Recording Function - Includes Dash Camera for Road Facing View		$1,680
☐	Add Operator Facing Camera for Operator Monitoring		$385
☐	Add Hopper Camera		$1,035

Effective December 1, 2017 Freedom Odyssey Residential Sales Order Form

3rd Eye Camera Systems			
☐	3rd Eye Single Camera System with Single Camera Mounted on Tailgate		$1,580
☐	3rd Eye Double Camera System (Cameras on T/G & LH Cab)		$2,030
☐	3rd Eye Double Camera System (Cameras on T/G & RH Cab)		$2,030
☐	3rd Eye Double Camera System (Cameras on T/G & RH Alley)		$2,030
☐	3rd Eye Double Camera System (Cameras on T/G & Hopper)		$2,030
Auxiliary Axles and Tires			
* NOTE: All axles MUST BE installed with tires so chassis can be re-certified to new GAWR and GVWR ratings			
☐	Watson & Chalin Self Steering Pusher Axle: 13,500 pound capacity, hub piloted or 20" spoke wheel hubs, automatic slack adjusters, type 16 air chambers, steering stabilizer kit and reverse lift kit		$14,145
☐	Watson & Chalin Self Steering Tag Axle: 15,000 pound capacity, hub piloted or 20" spoke wheel hubs, automatic slack adjusters, type 16 air chambers, steering stabilizer kit and reverse lift kit, includes Tag Axle Spill Shield		$14,455
☐	Watson & Chalin Rigid Pusher Axle: 20,000 pound capacity, hub piloted or 20" spoke wheel hubs, 30/30 brake chambers, automatic slack adjusters, 1,300 cubic inch air tank and regulator kit		$10,835
☐	Watson & Chalin Rigid Tag Axle: 20,000 pound capacity, hub piloted or 20" spoke wheel hubs, 30/30 brake chambers, automatic slack adjusters, 1,300 cubic inch air tank and regulator kit. includes Tag Axle Spill Shield		$11,150
Auxiliary Axle Tire Options			
☐	255/70R-22.5 - Qty(2) load range H, 5,510 pound single max load at 120 psi with rims		$2,240
☐	275/70R-22.5 - Qty(2) load range H, 7,000 pound single max load at 120 psi with rims		$2,835
☐	11 R-22.5 - Qty(2) load range H, 6,610 pound single max load at 120 psi with rims		$2,390
* Note: All auxiliary applications must be approved by Heil prior to order acceptance			
Body Options			
☐	Sliding Top Door - Aluminum - May not be compatible with roof mounted CNG system	B28	$4,855
☐	Tailgate Mounted Roof Access Ladder (Only one selection allowed) Not Available with CNrG Tailgate option		$1,345
☐	Curbside Mounted Roof Access Ladder (Only one selection allowed)		$1,345
☐	High Pressure Filter Kit	B3	STD
☐	High Pressure Filter Monitor		$670
☐	Second 20 lb. Fire Extinguisher		$495
☐	Tool Box Bumper Mount - Steel	B6	$765
☐	Tool Box Bumper Mount - Aluminum		$905
☐	Rear Caution Decal		$285
☐	Wheel Chock Kit - Dual		$160
☐	Fall Protection Kit		$3,400
☐	D-Ring Fall Protection		$825
☐	Hydraulic Oil Tank Quick Disconnect Kit - For use with filter buggy		$815
☐	Perma Coat on Cab Protector		$590
☐	Spill Kit		$340
☐	Packer Mounted Retainer Teeth		$725
☐	Hydraulic Oil Tank Heater - 500 watts		$1,185
☐	Fender Extension Kit		$725
☐	California Back Up Alarm		$725
☐	**Infinity Series Packer/Eject Cylinders** with scrapers and hardened rods to 50 HRC - Includes Five (5) Year Packer/Eject Cylinder Only Warranty that covers dents and dings (This Option is Required if purchasing extended warranty's below)		$3,055
☐	**Lightning Cylinder Package**: reduces front loader arm cycle time by up to 5 seconds and reduces front loader arm lifting capacity to a maximum of 5,500 lbs. This package is available via Custom request only, and also requires an End User signed waiver acknowledging the reduced arm lifting capacity of these cylinders.	(Custom Required)	

Effective December 1, 2017 Freedom Odyssey Residential Sales Order Form

	CNrG Tailgate Mounted CNG - Includes Installation Fee		
☐	60 DGE CNG System		$40,425
☐	75 DGE CNG System		$42,110
☐	90 DGE CNG System		$47,865
☐	105 DGE CNG System		$54,670
	FET Exempt CNrG Tailgate Mounted CNG For 20YD Bodies Only- Includes Installation Fee		
☐	60 DGE CNG System		$42,925
☐	75 DGE CNG System		$44,610
☐	90 DGE CNG System		$50,365
☐	105 DGE CNG System		$57,170
	CNrG Options		
☐	Front Bumper Fill with Kill Cap		$1,250
☐	Defuel Transfer Hose - 35 ft.		$1,995
	CNG Installation - Top of Body Installation		
☐	CNG Installation Charge - Includes brackets, temporary tank rental, hardware, and mounting of CNG system		$5,623
	Extended Complete Body Warranty Options		
☐	Two (2) Year (Months 13-24) (Maximum 4,000 hrs. of Operation) Complete Heil Body Warranty Requires additional purchase of Infinity packer/eject cylinders from above		$4,400
☐	Three (3) Year (Months 13-36) (Maximum 6,000 hrs. of Operation) Complete Heil Body Warranty Requires additional purchase of Infinity packer/eject cylinders from above		$7,550
☐	Four (4) Year (Months 13-48) (Maximum 8,000 hrs. of Operation) Complete Heil Body Warranty Requires additional purchase of Infinity packer/eject cylinders from above		$10,365
☐	Five (5) Year (Months 13-60) (Maximum 10,000 hrs. of Operation) Complete Heil Body Warranty Requires additional purchase of Infinity packer/eject cylinders from above		$14,255
	Extended Cylinder Warranty Options		
☐	Two (2) Year (Months 13-24) (Maximum 4,000 hrs. of Operation) All other Non-Infinity Cylinder Warranty - Requires additional purchase of Infinity packer/eject cylinders from above		$970
☐	Three (3) Year (Months 13-36) (Maximum 6,000 hrs. of Operation) All other Non-Infinity Cylinder Warranty - Requires additional purchase of Infinity packer/eject cylinders from above		$1,945
☐	Four (4) Year (Months 13-48) (Maximum 8,000 hrs. of Operation) All other Non-Infinity Cylinder Warranty - Requires additional purchase of Infinity packer/eject cylinders from above		$2,915
☐	Five (5) Year (Maximum 10,000 hrs. of Operation) All other Non-Infinity Cylinder Warranty - Requires purchase of Infinity packer or eject Cylinders from above		$3,395
	Paint Options		
	NOTE: LIST PAINT CODES ON PAINT DIAGRAM		
☐	Customized Paint Color - Paint Color Code NOT included in the Color Smart Brochure		$390
☐	Two Tone Paint		$1,485
☐	Paint Striping - first stripe		$1,250
☐	Paint Striping - each additional stripe		$695
☐	Metallic Paint		$5,000
☐	Clear coat Finish		$1,735
☐	Anti-Graffiti Clear coat Finish		$2,500
☐	Prime Paint Only - deduct		($1,220)
	TOTALS		
	Total from Options Above (MSRP)		**$0**
	Additional Options (Custom's, Chassis Mods, Etc.) Total		
	Subtotal		**$0**
	Dealer Discount (%)	**0%**	**$0**
	Dealer Net Price		**$0**
	Additional Discount (SPR)		
	Freight		
	Total Price per Unit		**$0**

FREEDOM ODYSSEY RESIDENTIAL

Paint Stripe & Accessories Requirements

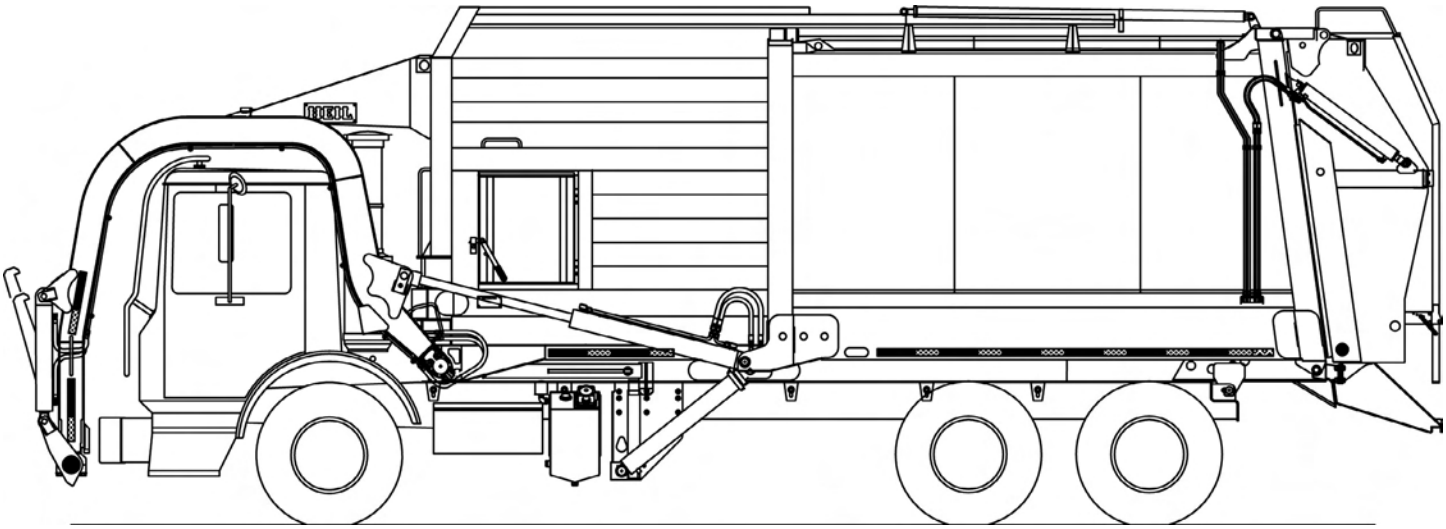

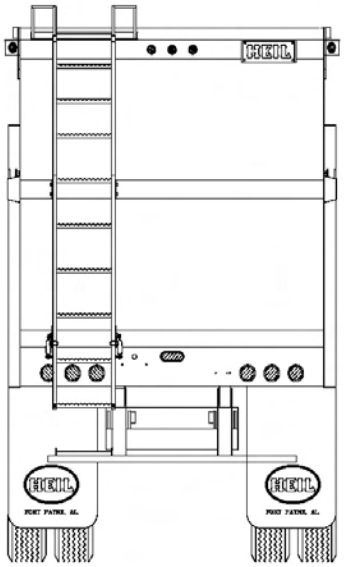

PAINT AND OPTIONS LAYOUT DETAIL
USE THIS FORM TO DESCRIBE PAINT SCHEMES
BE SPECIFIC ABOUT DIMENSIONS AND DETAILS

Sales Order #		Submitted by	
Customer			
Paint Color and Code 1			
Paint Color and Code 2			
Paint Color and Code 3			
Chassis Make			
Chassis Model			
Wheelbase			
Body Size		Approved by	

Half/Pack® Factor™ AFL

Featuring Odyssey™ Controls

Standard Equipment Features included in Base Price

- Hinged and completely sealed left-side body access door with step and grab handle
- Cab shield with hinged rubber tip extension - steel
- Front head closure screen with splash guard
- Under hopper liquid sump with 2 clean-out doors
- Body service props for service hoist models and service lift
- Tailgate service props
- Fully automatic Shur-Lock™ tailgate latches
- Clamp-on arms
- 8,000 lb. capacity arms - WASTEC WRP 06-1996 rated
- Four arm shaft bearing supports
- Fork cross shaft rubber bumpers
- Bolt-on rubber arm stops
- Heavy-duty forks - 1 1/2" thick x 63" grip length
- Chrome-plated cylinder rods and telescopic sleeves
- Crossed packing cylinders
- Chassis frame-mounted oil tank with level / temperature gauge and suction shut-off valve
- 3-micron return line filter with magnetic trap and in-cab filter bypass monitor
- 100-micron suction line strainer
- Abrasion-resistant hydraulic hoses
- Cortex Controller ™ with InSight™ diagnostic display with integrated 3rd Eye camera feed
- Throttle advance / throttle limit kit
- Left and right-hand single multifunction joystick
- Complete array of in-cab function indicator lights
- Streetwise Hydraulics™
- Solid-state control panel
- High-pressure filter kit
- Arm rest for operator controls
- 5 lb. in-cab fire extinguisher
- Backup alarm
- LED mid-body turn signals
- Strobe light, amber mounted on lower tailgate - in-cab switch, pump on, and reverse activated
- Front and rear mud flaps - anti-sail / anti-splash
- Rear underride guard
- Hopper floodlight
- Tailgate lock & closed indicator sensor with in-cab indicator and alarm
- Low oil level sensor with light, buzzer, and pump shut-off
- Severe-duty wear bar kit
- 3" sump drain on street side and curb side
- Arm/fork overheight warning kit
- PTO mounted load sense piston pump with hot shift PTO
- Hydraulic arm tube covers
- Remote I/O for tailgate valve and Curotto-Can
- Greaseless tailgate hinge and lift cylinders
- Hydraulic oil temperature sensor with alarm
- Body hydraulic pressure sensor
- Lightning arm cylinder package
- 20 lb. fire extinguisher
- FMVSS #108 clearance lights and reflectors
- ICC reflective tape
- Rear camera bracket and flood lights - reverse activated
- Body undercoating
- Customer's choice of one color finish paint from Color Smart brochure
- Standard 1-year warranty (2,000 Hours of Operation)
- ANSI Z 245.1-2012 compliant
- Arm guides mounted to front bumper
- Forward-facing floodlights on cab
- Upper arm reinforcement

Effective December 1, 2017 Half/Pack Factor AFL™ Sales Order Form

Base Units HP Genesis			
☐	20 cubic yard - With Integrated Automated Curotto-Can		$ 159,120
☐	23 cubic yard - With Integrated Automated Curotto-Can		$ 158,610
☐	28 cubic yard - With Integrated Automated Curotto-Can		$ 159,220
☐	Service Hoist Kit - 187" Wheelbase 5 Axle Units WILL NOT accept the service hoist option*	B9	$ 4,385
	*5 Axle 187" Wheelbase - Hendrickson Auxiliary Axles Only with 275/R70/22.5 or smaller tires.		
Hopper Size			12 yd³
CHASSIS MUST COMFORM WITH HEIL'S MOST CURRENT CHASSIS SPECIFICATIONS AT WWW.HEIL.COM			
* NOTE: Red numbers reference Option Photo Index			
Mounting Options			
☐	Full Factory Mount for Service Hoist or Serviceable Eject - Includes Body Props and Rear Pivot		$ 5,505
☐	Mount at Dealer Destination		$ 735
Power Take Off / Pump Options			
☐	PTO Mounted Load Sense Piston pump - Includes PTO		STD
Truck Side Automated Options			
☐	Hopper Seal Brush Kit - Includes Sides, Front, and Rear Bristle Hopper Seal Kit - Can-Side Brushes must be ordered in addition from Curotto Can-Side Options below		$ 2,565
☐	Remote Curbside Curotto Can Controls		$ 1,545
☐	Installation of Auto cover controls - Auto cover must be also selected from Curotto Can Options below		$ 1,545
☐	In-Cab controls for integrated forward work lamps - Forward Work lamps must also be purchased from the below Curotto Can Options		$ 625
Curotto Can-Side Options			
☐	Rotary Auto Cover Installed on the Curotto Can - Auto Cover controls must be selected from above.		$ 1,940
☐	Brush Kit Installed on the Curotto Can Includes Front, Curb, and StreetSide of the Curotto Can * Hopper Seal Brush kits for the truck side must be ordered from above.		$ 575
☐	Curotto Can Forward Work Lights installed Can-side. - In cab controls for work lamps mush be purchased from above.		$ 1,320
☐	Conspicuity Tape Installed on the Curotto Can		$ 195
☐	6" Wide Belt Upgrade for Curotto Can Arm		$ 310
☐	8" Wide Belt Upgrade for Curotto Can Arm		$ 220
Control Options			
☐	Single Multifunction Joystick - Left and Right Hand		STD
☐	Left Hand 2-Lever Electric Control in lieu of Multifunction Joystick	CE6	$ 535
☐	Left Hand Single Axis Joystick Electric Control in lieu of Multifunction Joystick		$ 535
☐	Outside Electric Rocker Switch Controls Kit (arms, forks and packer) with Throttle Advance	CE5	$ 2,335
Lighting and Electrical Accessories			
☐	Single Led Hopper Mounted Container Work light		$ 590
☐	Multi-Function (SMART) LED Strobe / Turn Lamps		$ 610
☐	Body Side Backing Assist Lights - LED		$ 505
☐	Dual Oval Flat LED Strobes Mounted Mid-T/G - in-cab switch, pump on, and reverse activated	L15	$ 1,055
Camera Systems			
All camera systems are mounted with protective camera brackets and twin tailgate flood lights.			
CAMERA MONITOR LOCATION WILL BE CAB ROOF MOUNTED			
Swivel monitor bracket will be provided for dual drive chassis			
360 ˚ Camera Systems and Options			
☐	360 Degree Camera Package - Includes 360 degree camera system (4 camera), DVR capability, Dash Camera, Operator Facing Camera, and Hopper Camera.		$ 10,260
☐	360 Base Camera System - Includes 360 (4 Camera System) for Monitoring Only		$ 8,440
☐	Add DVR for Recording Function - Includes Dash Camera for Road Facing View		$ 1,680
☐	Add Operator Facing Camera for Operator Monitoring		$ 385
☐	Add Hopper Camera		$ 1,035
3rd Eye Camera Systems			
☐	3rd Eye Single Camera System with Single Camera Mounted on Tailgate		$ 1,580
☐	3rd Eye Double Camera System (Cameras on T/G & LH Cab)		$ 2,030
☐	3rd Eye Double Camera System (Cameras on T/G & RH Cab)		$ 2,030
☐	3rd Eye Double Camera System (Cameras on T/G & RH Alley)		$ 2,030
☐	3rd Eye Double Camera System (Cameras on T/G & Hopper)		$ 2,030
Load Cell Scale Systems			
☐	Heil Optimum Payload System (HOPS) using Air-Weigh Axle Scales	CE20	$ 8,740
☐	Air-Weigh Axle Scale System without Interlock	CE20	$ 8,155

	Auxiliary Axles and Tires		
* NOTE: All axles MUST BE installed with tires so chassis can be re-certified to new GAWR and GVWR ratings			
☐ #	Watson & Chalin Self Steering Pusher Axle: 13,000 pound capacity, hub piloted or 20" spoke wheel hubs, automatic slack adjusters, type 16 air chambers, steering stabilizer kit and reverse lift kit -		$ 14,145
☐	Watson & Chalin Self Steering Tag Axle: 13,000 pound capacity, hub piloted or 20" spoke wheel hubs, automatic slack adjusters, type 16 air chambers, steering stabilizer kit and reverse lift kit, includes Tag Axle Spill Shield		$ 14,455
☐	Watson & Chalin Rigid Pusher Axle: 25,000 pound capacity, hub piloted or 20" spoke wheel hubs, 30/30 brake chambers, automatic slack adjusters, 1,300 cubic inch air tank and regulator kit		$ 10,835
☐	Watson & Chalin Rigid Tag Axle: 25,000 pound capacity, hub piloted or 20" spoke wheel hubs, 30/30 brake chambers, automatic slack adjusters, 1,300 cubic inch air tank and regulator kit, includes Tag Axle Spill Shield		$ 11,150
	Auxiliary Axle Tire Options		
☐ #	255/70R-22.5 - Qty(2) load range H, 5,510 pound single max load at 120 psi with rims		$ 2,240
☐	275/70R-22.5 - Qty(2) load range H, 7,000 pound single max load at 120 psi with rims		$ 2,835
☐ #	11 R-22.5 - Qty(2) load range H, 6,610 pound single max load at 120 psi with rims		$ 2,390
* Note: All auxiliary applications must be approved by Heil prior to order acceptance			
	Body Options		
☐	Tailgate Mounted Roof Access Ladder (Only on selection allowed) *Not available with CNrG Tailgate Option*		$ 1,345
☐	Curbside Mounted Roof Access Ladder (Only one ladder selection allowed)		$ 1,345
☐	Hopper Floor Liner (3/16" - AR400)		$ 1,795
☐	Hopper Floor Liner (1/4" - AR400)		$ 2,855
☐	Body Roof Retainer Teeth - 2 rows at front of body - Minimizes springback in cardboard and recycling applications	B26	$ 1,040
☐	High Pressure Filter Kit	B3	STD
☐	High Pressure Filter Monitor		$ 670
☐	Second 20 lb. Fire Extinguisher		$ 495
☐	Tool Box Bumper Mount - Steel	B6	$ 765
☐	Tool Box Bumper Mount - Aluminum		$ 905
☐	Cab Protector Extension Raise - Manual Jack		$ 1,140
☐	Rear Caution Decal		$ 285
☐	Wheel Chock Kit - Dual		$ 160
☐	Fall Protection Kit		$ 3,400
☐	D-Ring Fall Protection		$ 825
☐	Hydraulic Oil Tank Quick Disconnect Kit - For use with filter buggy		$ 815
☐	Perma Coat on Cab Protector		$ 585
☐	Hydraulic Raise Cab Protector Kit		$ 5,335
☐	Spill Kit		$ 340
☐	Packer Mounted Retainer Teeth		$ 725
☐	Hydraulic Oil Tank Heater - 500 watts		$ 1,185
☐	Fender Extension Kit		$ 725
☐	California Back Up Alarm		$ 675
☐ #	Infinity Series Packer/Eject Cylinders with scrapers and hardened rods to 50 HRC - Includes Five (5) Year Packer/Eject Cylinder Only Warranty that covers dents and dings (This Option is Required if purchasing extended warranty's below)		$ 3,055
	CNrG Tailgate Mounted CNG - Includes Installation Fee		
☐	60 DGE CNG System		$ 40,425
☐	75 DGE CNG System		$ 42,110
☐	90 DGE CNG System		$ 47,865
☐	105 DGE CNG System		$ 54,670
	FET Exempt CNrG Tailgate Mounted CNG For 20YD Bodies Only- Includes Installation Fee		
☐	60 DGE CNG System		$ 42,925
☐	75 DGE CNG System		$ 44,610
☐	90 DGE CNG System		$ 50,365
☐	105 DGE CNG System		$ 57,170
	CNrG Options		
☐	Front Bumper Fill with Kill Cap		$ 1,250
	CNG Installation - Top of Body Installation		
☐	CNG Installation Charge - Includes brackets, temporary tank rental, hardware, and mounting of CNG system		$ 5,625
	Extended Complete Body Warranty Options		
☐	Two (2) Year (Months 13-24) (Maximum 4,000 hrs. of Operation) Complete Heil Body Only Warranty (Excludes Curotto Can) Requires additional purchase of Infinity packer/eject cylinders from above		$ 4,400
☐	Three (3) Year (Months 13-36) (Maximum 6,000 hrs. of Operation) Complete Heil Body Only Warranty (Excludes Curotto Can) Requires additional purchase of Infinity packer/eject cylinders from above		$ 7,550
☐	Four (4) Year (Months 13-48) (Maximum 8,000 hrs. of Operation) Complete Heil Body Only Warranty (Excludes Curotto Can) Requires additional purchase of Infinity packer/eject cylinders from above		$ 10,635
☐	Five (5) Year (Months 13-60) (Maximum 10,000 hrs. of Operation) Complete Heil Body Only Warranty (Excludes Curotto Can) Requires additional purchase of Infinity packer/eject cylinders from above		$ 14,255
	Extended Cylinder Warranty Options		

☐	Two (2) Year (Months 13-24) (Maximum 4,000 hrs. of Operation) All other Non-Infinity Cylinder For Heil Body Only Warranty (Excludes Curotto Can) Requires additional purchase of Infinity packer/eject cylinders from above		$ 970
☐	Three (3) Year (Months 13-36) (Maximum 6,000 hrs. of Operation) All other Non-Infinity Cylinder For Heil Body Only Warranty - (Excludes Curotto Can) Requires additional purchase of Infinity packer/eject cylinders from above		$ 1,945
☐	Four (4) Year (Months 13-48) (Maximum 8,000 hrs. of Operation) All other Non-Infinity Cylinder For Heil Body Only Warranty - (Excludes Curotto Can) Requires additional purchase of Infinity packer/eject cylinders from above		$ 2,915
☐	Five (5) Year (Months 13-60) (Maximum 10,000 hrs. of Operation) All other Non-Infinity Cylinder For Heil Body Only Warranty - (Excludes Curotto Can) Requires additional purchase of Infinity packer/eject cylinders from above		$ 3,395
	Paint Options		
NOTE: LIST PAINT CODES ON PAINT DIAGRAM			
☐	Customized Paint Color - Paint Color Code NOT included in the Color Smart Brochure		$ 390
☐	Two Tone Paint		$ 1,485
☐	Paint Striping - first stripe		$ 1,250
☐	Paint Striping - each additional stripe		$ 695
☐	Metallic Paint		$ 5,000
☐	Clear coat Finish		$ 1,735
☐	Anti-Graffiti Clear coat Finish		$ 2,500
☐	Prime Paint Only - deduct		$ (1,220)
	TOTALS		
	Total from Options Above (MSRP)		**$ -**
	Additional Options (Custom's, Chassis Mods, Etc.) Total		
	Subtotal		**$ -**
	Dealer Discount (%)	**0%**	**$ -**
	Dealer Net Price		**$ -**
	Additional Discount (SPR)		
	Freight		
	Total Price per Unit		**$ -**

Half/Pack Factor AFL

Paint Stripe & Accessories Requirements

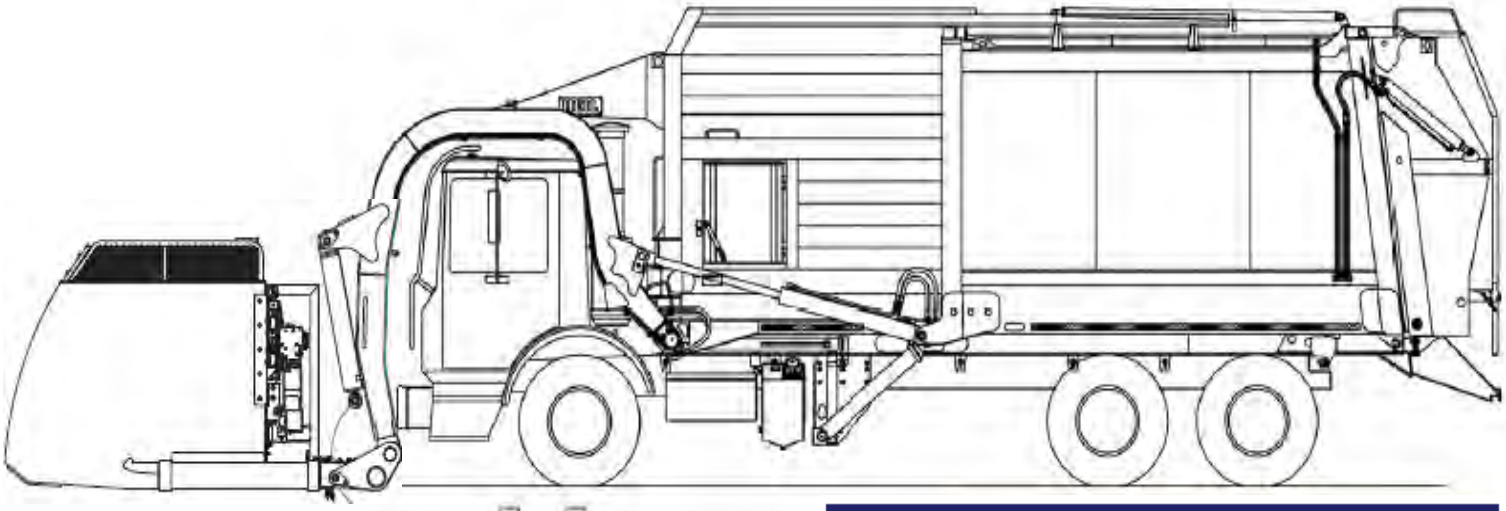

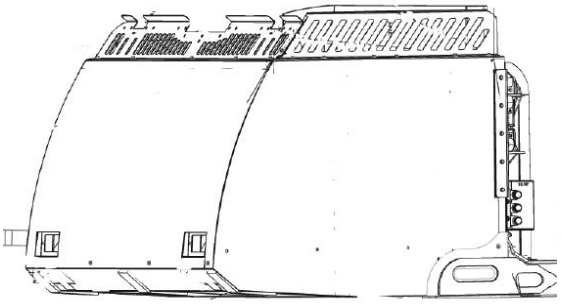

Paint and options layout detail.

Use this form to describe paint schemes.
Be specific about dimensions and details.

Sales Order #	
Customer	
Paint Color 1	
Paint Color 2	
Paint Color 3	
Chassis Make	
Wheelbase	
Body Size	
Curotto Can Paint Color	

Submitted by	
Approved by	

Half/Pack® Factor AFL™ Sierra

Featuring Odyssey™ Controls

Standard Equipment Features included in Base Price

- Hinged and completely sealed aluminum left-side body access door with step and grab handle
- Full aluminum cab shield with air cylinder assisted raise
- Under hopper liquid sump with 2 clean-out doors
- Body service props for service hoist models and service lift
- Tailgate service props
- Fully automatic Shur-Lock™ tailgate latches
- Clamp-on arms
- 8,000 lb. capacity arms - WASTEC WRP 06-1996 rated
- Two arm shaft bearing supports
- Fork cross shaft rubber bumpers
- Bolt-on rubber arm stops
- Heavy-duty forks - 1 1/2" thick x 59" grip length
- Chrome-plated cylinder rods and telescopic sleeves
- Crossed packing cylinders
- Chassis frame-mounted oil tank with level / temperature gauge and suction shut-off valve
- 3-micron return line filter with magnetic trap and in-cab filter bypass monitor
- 100-micron suction line strainer
- Abrasion-resistant hydraulic hoses
- Cortex Controller ™ with InSight™ diagnostic display with integrated 3rd Eye camera feed
- Throttle advance / throttle limit kit
- Joystick in-cab air controls
- Complete array of in-cab function indicator lights
- 5 lb. in-cab fire extinguisher
- Tailgate lock & closed indicator sensor with in-cab indicator and alarm
- PTO mounted load sense piston pump with hot shift PTO
- Hydraulic arm tube covers
- Remote I/O for tailgate valve and Curotto-Can
- Greaseless tailgate hinge and lift cylinders
- Hydraulic oil temperature sensor with alarm
- Body hydraulic pressure sensor
- Lightning arm cylinder package
- Remote I/O for tailgate valve
- Streetwise Hydraulics™
- Backup alarm
- Hopper flood light
- Low oil level sensor with light, buzzer, and pump shut-off
- Severe-duty wear bar kit
- 3" sump drain on street side and curb side
- Remote packer lube kit
- Shovel kit mounted on back of the packer
- Arm / Fork over height warning kit
- Backup and license plate light
- LED center-mounted brake light
- LED duplicate high and low mount stop, turn, and tail lights
- LED mid-body turn signals
- Strobe light, amber mounted on lower tailgate - in-cab switch, pump on, and reverse activated
- Front and rear mud flaps - anti-sail / anti-splash
- Rear underride guard
- 20 lb. fire extinguisher
- FMVSS #108 clearance lights and reflectors
- ICC reflective tape
- Rear camera bracket and flood lights - reverse activated
- Body undercoating
- Customer's choice of one color finish paint from Color Smart brochure
- Standard 1-year warranty (2,000 Hours of Operation)
- ANSI Z 245.1-2012 compliant

Environmental Solutions Group
A DOVER COMPANY

Effective December 1, 2017 Half/Pack Factor Sierra AFL™ Dedicated Sales Order Form

Base Units HP Sierra Genesis			
☐	28 cubic yard - With Integrated Automated Curotto-Can		$168,000
☐	Service Hoist Kit - 187" Wheelbase 5 Axle Units WILL NOT accept the service hoist option*	B9	$4,385
	*5 Axle 187" Wheelbase - Hendrickson Auxiliary Axles Only with 275/R70/22.5 or smaller tires.		
Hopper Size			12 yd³
CHASSIS MUST COMFORM WITH HEIL'S MOST CURRENT CHASSIS SPECIFICATIONS AT WWW.HEIL.COM			
* NOTE: Red numbers reference Option Photo Index			
Mounting Options			
☐	Full Factory Mount for Service Hoist or Serviceable Eject - Includes Body Props and Rear Pivot		$5,505
☐	Mount at Dealer Destination		$735
Power Take Off / Pump Options			
☐	PTO Mounted Load Sense Piston pump - Includes PTO		STD
Truck Side Automated Options			
☐	Hopper Seal Brush Kit - Includes Sides, Front, and Rear Bristle Hopper Seal Kit - Can-Side Brushes must be ordered in addition from below Curotto Can-Side Options		$ 2,565
☐	Remote Curbside Curotto Can Controls		$ 1,545
☐	Installation of Auto cover controls - Auto cover must be also selected from Curotto Can Options below		$ 1,545
☐	In-Cab controls for integrated forward work lamps - Forward Work lamps must also be purchased from the below Curotto Can Options		$ 625
Curotto Can-Side Options			
☐	Rotary Auto Cover Installed on the Curotto Can - Auto Cover controls must be selected from above.		$ 1,940
☐	Brush Kit Installed on the Curotto Can Includes Front, Curb, and StreetSide of the Curotto Can * Hopper Seal Brush kits for the truck side must be ordered from above.		$ 575
☐	Curotto Can Forward Work Lights installed Can-Side. - In cab controls for work lamps mush be purchased from above.		$ 1,320
☐	Conspicuity Tape Installed on the Curotto Can		$ 195
☐	6" Wide Belt Upgrade for Curotto Can Arm		$ 310
☐	8" Wide Belt Upgrade for Curotto Can Arm		$ 220
Control Options			
☐	Single Multifunction Joystick - Left and Right Hand		STD
☐	Left Hand 2-Lever Electric Control in lieu of Multifunction Joystick	CE6	$ 535
☐	Left Hand Single Axis Joystick Electric Control in lieu of Multifunction Joystick		$ 535
☐	Outside Electric Rocker Switch Controls Kit (arms, forks and packer) with Throttle Advance	CE5	$ 2,335
Lighting and Electrical Accessories			
☐	Single Led Hopper Mounted Container Work light		$ 590
☐	Multi-Function (SMART) LED Strobe / Turn Lamps		$ 610
☐	Body Side Backing Assist Lights - LED		$ 505
☐	Dual Oval Flat LED Strobes Mounted Mid-T/G - in-cab switch, pump on, and reverse activated	L15	$ 1,055
☐	Dual Cab Guard Mounted Flood Lights		$ 495
Camera Systems			
All camera systems are mounted with protective camera brackets and twin tailgate flood lights.			
CAMERA MONITOR LOCATION WILL BE CAB ROOF MOUNTED Swivel monitor bracket will be provided for dual drive chassis			
360 ° Camera Systems and Options			
☐	360 Degree Camera Package - Includes 360 degree camera system (4 camera), DVR capability, Dash Camera, Operator Facing Camera, and Hopper Camera.		$10,260
☐	360 Base Camera System - Includes 360 (4 Camera System) for Monitoring Only		$ 8,440
☐	Add DVR for Recording Function - Includes Dash Camera for Road Facing View		$ 1,680
☐	Add Operator Facing Camera for Operator Monitoring		$ 385
☐	Add Hopper Camera		$ 1,035
3rd Eye Camera Systems			
☐	3rd Eye Single Camera System with Single Camera Mounted on Tailgate		$ 1,580
☐	3rd Eye Double Camera System (Cameras on T/G & LH Cab)		$ 2,030
☐	3rd Eye Double Camera System (Cameras on T/G & RH Cab)		$ 2,030
☐	3rd Eye Double Camera System (Cameras on T/G & RH Alley)		$ 2,030
☐	3rd Eye Double Camera System (Cameras on T/G & Hopper)		$ 2,030
Load Cell Scale Systems			
☐	Heil Optimum Payload System (HOPS) using Air-Weigh Axle Scales	CE20	$ 8,740
☐	Air-Weigh Axle Scale System without Interlock	CE20	$ 8,155

Auxiliary Axle Options			
* NOTE: All axles MUST BE installed with tires so chassis can be re-certified to new GAWR and GVWR ratings			
☐	Watson & Chalin Self Steering Pusher Axle: 13,000 pound capacity, hub piloted or 20" spoke wheel hubs, automatic slack adjusters, type 16 air chambers, steering stabilizer kit and reverse lift kit -		$14,145
☐	Watson & Chalin Self Steering Tag Axle: 13,000 pound capacity, hub piloted or 20" spoke wheel hubs, automatic slack adjusters, type 16 air chambers, steering stabilizer kit and reverse lift kit, includes Tag Axle Spill Shield		$14,455
☐	Watson & Chalin Rigid Pusher Axle: 25,000 pound capacity, hub piloted or 20" spoke wheel hubs, 30/30 brake chambers, automatic slack adjusters, 1,300 cubic inch air tank and regulator kit		$10,835
☐	Watson & Chalin Rigid Tag Axle: 25,000 pound capacity, hub piloted or 20" spoke wheel hubs, 30/30 brake chambers, automatic slack adjusters, 1,300 cubic inch air tank and regulator kit, includes Tag Axle Spill Shield		$11,150
* Note: All auxiliary applications must be approved by Heil prior to order acceptance			
Auxiliary Axle Tire Options			
☐	255/70R-22.5 - Qty(2) load range H, 5,510 pound single max load at 120 psi with rims		$2,240
☐	275/70R-22.5 - Qty(2) load range H, 7,000 pound single max load at 120 psi with rims		$2,835
☐	11 R-22.5 - Qty(2) load range H, 6,610 pound single max load at 120 psi with rims		$2,390
Body Options			
☐	Tailgate Mounted Roof Access Ladder (Only one selection allowed) Not Available with CNrG Tailgate option		$1,345
☐	Curbside Mounted Roof Access Ladder (Only one selection allowed)		$1,345
☐	Hopper Floor Liner (3/16" - AR400)		$1,795
☐	Hopper Floor Liner (1/4" - AR400)		$2,855
☐	Body Roof Retainer Teeth - 2 rows at front of body - Minimizes spring back in cardboard and recycling applications	B26	$1,040
☐	High Pressure Filter Kit	B3	STD
☐	High Pressure Filter Monitor		$670
☐	Second 20 lb. Fire Extinguisher		$495
☐	Tool Box Bumper Mount - Steel	B6	$765
☐	Tool Box Bumper Mount - Aluminum		$905
☐	Extendable Broom Kit - Mounted on hopper side		$410
☐	Rear Caution Decal		$285
☐	Wheel Chock Kit - Dual		$160
☐	Fall Protection Kit		$3,400
☐	D-Ring Fall Protection		$825
☐	Hydraulic Oil Tank Quick Disconnect Kit - For use with filter buggy		$815
☐	Perma Coat on Cab Protector		$585
☐	Hydraulic Raise Cab Protector Kit - Will Receive Steel Cab Shield in Lieu of Aluminum		$5,335
☐	Spill Kit		$340
☐	Packer Mounted Retainer Teeth		$725
☐	Hydraulic Oil Tank Heater - 500 watts		$1,185
☐	Fender Extension Kit		$725
☐	California Back Up Alarm		$675
☐	Infinity Series Packer/Eject Cylinders with scrapers and hardened rods to 50 HRC - Includes Five (5) Year Packer/Eject Cylinder Only Warranty that covers dents and dings (This Option is Required if purchasing extended warranty's below)		$3,055
CNrG Tailgate Mounted CNG - Includes Installation Fee			
☐	60 DGE CNrG System		$40,425
☐	75 DGE CNrG System		$42,110
☐	90 DGE CNrG System		$47,865
☐	105 DGE CNrG System		$54,670
CNrG Options			
☐	Front Bumper Fill with Kill Cap		$1,250
CNG Installation - Top of Body Installation			
☐	CNG Installation Charge - Includes brackets, temporary tank rental, hardware, and mounting of CNG system		$5,625
Extended Complete Body Warranty Options			
☐	Two (2) Year (Months 13-24) (Maximum 4,000 hrs. of Operation) Complete Heil Body Only Warranty (Excludes Curotto Can) Requires additional purchase of Infinity packer/eject cylinders from above		$4,400
☐	Three (3) Year (Months 13-36) (Maximum 6,000 hrs. of Operation) Complete Heil Body Only Warranty (Excludes Curotto Can) Requires additional purchase of Infinity packer/eject cylinders from above		$7,550
☐	Four (4) Year (Months 13-48) (Maximum 8,000 hrs. of Operation) Complete Heil Body Only Warranty (Excludes Curotto Can) Requires additional purchase of Infinity packer/eject cylinders from above		$10,635
☐	Five (5) Year (Months 13-60) (Maximum 10,000 hrs. of Operation) Complete Heil Body Only Warranty (Excludes Curotto Can) Requires additional purchase of Infinity packer/eject cylinders from above		$14,255
Extended Cylinder Warranty Options			
☐	Two (2) Year (Months 13-24) (Maximum 4,000 hrs. of Operation) All other Non-Infinity Cylinder For Heil Body Only Warranty (Excludes Curotto Can) Requires additional purchase of Infinity packer/eject cylinders from above		$970
☐	Three (3) Year (Months 13-36) (Maximum 6,000 hrs. of Operation) All other Non-Infinity Cylinder For Heil Body Only Warranty - (Excludes Curotto Can) Requires additional purchase of Infinity packer/eject cylinders from above		$1,945
☐	Four (4) Year (Months 13-48) (Maximum 8,000 hrs. of Operation) All other Non-Infinity Cylinder For Heil Body Only Warranty - (Excludes Curotto Can) Requires additional purchase of Infinity packer/eject cylinders from above		$2,915
☐	Five (5) Year (Months 13-60) (Maximum 10,000 hrs. of Operation) All other Non-Infinity Cylinder For Heil Body Only Warranty - (Excludes Curotto Can) Requires additional purchase of Infinity packer/eject cylinders from above		$3,395
Paint Options			
NOTE: LIST PAINT CODES ON PAINT DIAGRAM			
☐	Customized Paint Color - Paint Color Code NOT included in the Color Smart Brochure		$390
☐	Two Tone Paint		$1,485
☐	Paint Striping - first stripe		$1,250

☐	Paint Striping - each additional stripe		$695
☐	Metallic Paint		$5,000
☐	Clear coat Finish		$1,735
☐	Anti-Graffiti Clear coat Finish		$2,500
☐	Prime Paint Only - deduct		($1,220)
TOTALS			
	Total from Options Above (MSRP)		**$0**
	Additional Options (Custom's, Chassis Mods, Etc.) Total		
	Subtotal		**$0**
	Dealer Discount (%)	**0%**	**$0**
	Dealer Net Price		**$0**
	Additional Discount (SPR)		
	Freight		
	Total Price per Unit		**$0**

Half/Pack Factor AFL

Paint Stripe & Accessories Requirements

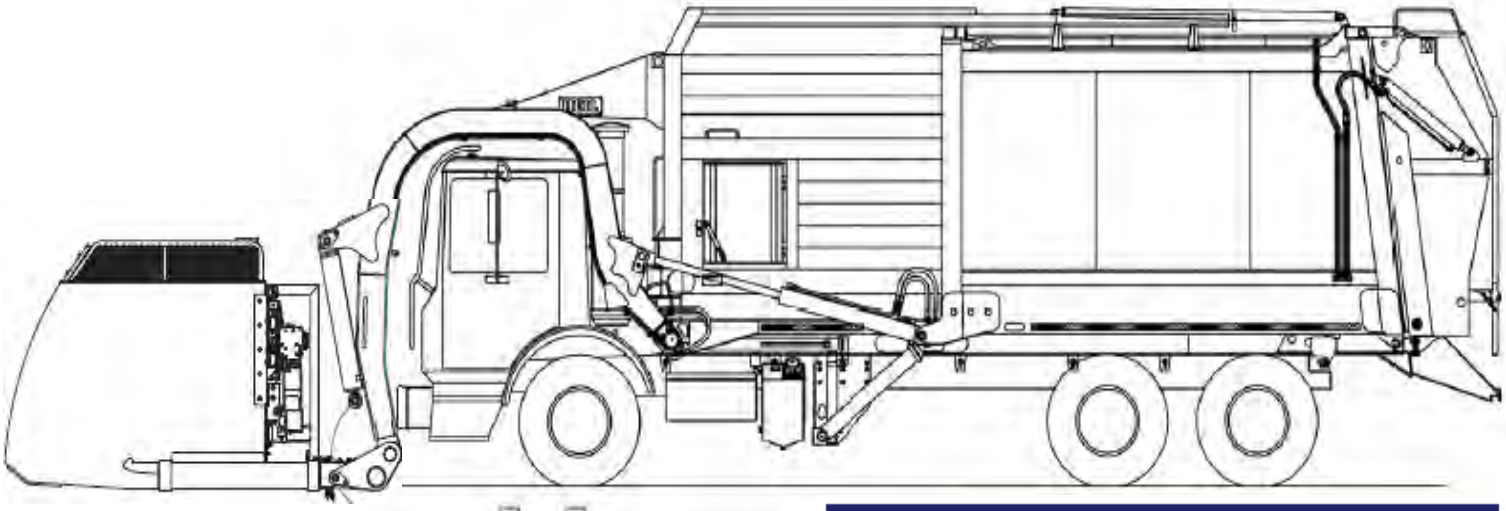

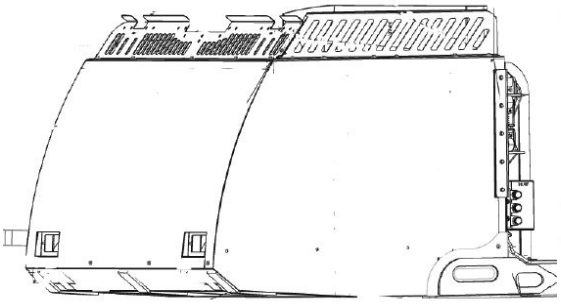

Paint and options layout detail.

Use this form to describe paint schemes.
Be specific about dimensions and details.

Sales Order #	
Customer	
Paint Color 1	
Paint Color 2	
Paint Color 3	
Chassis Make	
Wheelbase	
Body Size	
Curotto Can Paint Color	

Submitted by	
Approved by	

Half/Pack® Factor AFL™ Freedom

Featuring Odyssey™ Controls

Standard Equipment Features included in Base Price

- Hinged and completely sealed left-side body access door with step and grab handle
- Full aluminum cab shield with air cylinder assisted raise
- 3" underbody gate valve on street side for liquid removal
- Front head closure screen
- Body service props for service lift
- Tailgate service props
- Fully automatic Shur-Lock™ tailgate locks
- Clamp-on arms
- 8,000 lb. capacity arms - WASTEC WRP 06-1996 rated
- Four arm shaft bearing supports
- Bolt-on rubber arm stops
- Heavy-duty forks - 1" thick x 59" grip length
- Chrome-plated cylinder rods and telescopic sleeves
- Chassis frame-mounted aluminum oil tank with level / temperature gauge and suction shut-off valve
- 3-micron return line filter with magnetic trap and in-cab filter bypass monitor
- Heil Optimum Payload System - HOPS™
- 100-micron suction line strainer
- Abrasion-resistant hydraulic hoses
- Cortex Controller ™ with InSight™ diagnostic display with integrated 3rd Eye camera feed
- Throttle advance / throttle limit kit
- Joystick in-cab air controls
- Complete array of in-cab function indicator lights
- Arm rest for operator controls
- 5 lb. in-cab fire extinguisher
- Streetwise Hydraulics™
- Tailgate lock & closed indicator sensor with in cab indicator and alarm
- PTO Mounted Load Sense Piston Pump with Hot Shift PTO
- Hydraulic arm tube covers
- Remote I/O for tailgate valve and Curotto-Can
- Greaseless tailgate hinge and lift cylinders
- Hydraulic oil temperature sensor with alarm
- Body hydraulic pressure sensor
- Lightning arm cylinder package
- Backup alarm
- Hopper floodlight
- Low oil level sensor light, buzzer, and pump shut-off
- Severe-duty wear bar kit
- Remote packer lube kit
- Shovel kit mounted on back of the packer
- Arm / fork overweight warning kit
- Backup light and license plate light
- LED center-mounted brake light
- LED duplicate high and low mount stop, turn, and tail lights
- LED mid-body turn signals
- Strobe light, amber mounted on lower tailgate - in-cab switch, pump on, and reverse activated
- Front and rear mud flaps - anti-sail / anti-splash
- Rear underride guard
- 20 lb. fire extinguisher
- FMVSS #108 clearance lights & reflectors
- ICC reflective tape
- Rear camera bracket and floodlights - reverse activated
- Body undercoating
- Customer's choice of one color finish paint from Color Smart brochure
- Standard 1-year warranty (2,000 Hours of Operation)
- ANSI Z 245.1-2012 compliant
- Safety triangle
- Cavity and joint sealer

Effective December 1, 2017 Half/Pack Factor Freedom AFL™ Sales Order Form

Base Units HP Freedom Genesis			
☐	20 cubic yard - With Integrated Automated Curotto-Can		$172,900
☐	23 cubic yard - With Integrated Automated Curotto-Can		$173,900
☐	28 cubic yard - With Integrated Automated Curotto-Can		$172,900
☐	Service Hoist Kit - 187" Wheelbase 5 Axle Units WILL NOT accept the service hoist option*	B9	$4,385
	*5 Axle 187" Wheelbase - Hendrickson Auxiliary Axles Only with 275/R70/22.5 or smaller tires.		
Hopper Size			12 yd³
CHASSIS MUST COMFORM WITH HEIL'S MOST CURRENT CHASSIS SPECIFICATIONS AT WWW.HEIL.COM			
* NOTE: Red numbers reference Option Photo Index			
Mounting Options			
☐	Full Factory Mount for Service Hoist or Serviceable Eject - Includes Body Props and Rear Pivot		$5,505
☐	Mount at Dealer Destination		$735
Power Take Off / Pump Options			
☐	PTO Mounted Load Sense Piston pump - Includes PTO		STD
Truck Side Automated Options			
☐	Hopper Seal Brush Kit - Includes Sides, Front, and Rear Bristle Hopper Seal Kit - Can-Side Brushes must be ordered in addition from below Curotto Can-Side Options		$ 2,565
☐	Remote Curbside Curotto Can Controls		$ 1,545
☐	Installation of Auto cover controls - Auto cover must be also selected from Curotto Can Options below		$ 1,545
☐	In-Cab controls for integrated forward work lamps - Forward Work lamps must also be purchased from the below Curotto Can Options		$ 625
Curotto Can-Side Options			
☐	Rotary Auto Cover Installed on the Curotto Can - Auto Cover controls must be selected from above.		$ 1,940
☐	Brush Kit Installed on the Curotto Can Includes Front, Curb, and StreetSide of the Curotto Can * Hopper Seal Brush kits for the truck side must be ordered from above.		$ 575
☐	Curotto Can Forward Work Lights installed Can-Side. - In cab controls for work lamps mush be purchased from above.		$ 1,320
☐	Conspicuity Tape Installed on the Curotto Can		$ 195
☐	6" Wide Belt Upgrade for Curotto Can Arm		$ 310
☐	8" Wide Belt Upgrade for Curotto Can Arm		$ 220
Control Options			
☐	Single Multifunction Joystick - Left and Right Hand		STD
☐	Left Hand 2-Lever Electric Control in lieu of Multifunction Joystick	CE6	$535
☐	Left Hand Single Axis Joystick Electric Control in lieu of Multifunction Joystick		$535
☐	Outside Electric Rocker Switch Controls Kit (arms, forks and packer) with Throttle Advance	CE5	$2,335
Lighting and Electrical Accessories			
☐	Single Led Hopper Mounted Container Work light		$590
☐	Multi-Function (SMART) LED Strobe / Turn Lamps		$610
☐	Body Side Backing Assist Lights - LED		$505
☐	Dual Oval Flat LED Strobes Mounted Mid-T/G - in-cab switch, pump on, and reverse activated	L15	$1,055
☐	Dual Cab Guard Mounted Flood Lights		$495
Camera Systems			
All camera systems are mounted with protective camera brackets and twin tailgate flood lights			
CAMERA MONITOR LOCATION WILL BE CAB ROOF MOUNTED			
360 ˚ Camera Systems and Options			
☐	360 Degree Camera Package - Includes 360 degree camera system (4 camera), DVR capability, Dash Camera, Operator Facing Camera, and Hopper Camera.		$10,260
☐	360 Base Camera System - Includes 360 (4 Camera System) for Monitoring Only		$8,440
☐	Add DVR for Recording Function - Includes Dash Camera for Road Facing View		$1,680
☐	Add Operator Facing Camera for Operator Monitoring		$385
☐	Add Hopper Camera		$1,035
3rd Eye Camera Systems			
☐	3rd Eye Single Camera System with Single Camera Mounted on Tailgate		$1,580

☐	3rd Eye Double Camera System (Cameras on T/G & LH Cab)		$2,030
☐	3rd Eye Double Camera System (Cameras on T/G & RH Cab)		$2,030
☐	3rd Eye Double Camera System (Cameras on T/G & RH Alley)		$2,030
☐	3rd Eye Double Camera System (Cameras on T/G & Hopper)		$2,030

Auxiliary Axles and Tires			
* NOTE: All axles MUST BE installed with tires so chassis can be re-certified to new GAWR and GVWR ratings			
☐	Watson & Chalin Self Steering Pusher Axle: 13,000 pound capacity, hub piloted or 20" spoke wheel hubs, automatic slack adjusters, type 16 air chambers, steering stabilizer kit and reverse lift kit		$14,145
☐	Watson & Chalin Self Steering Tag Axle: 13,000 pound capacity, hub piloted or 20" spoke wheel hubs, automatic slack adjusters, type 16 air chambers, steering stabilizer kit and reverse lift kit, includes Tag Axle Spill Shield		$14,455
☐	Watson & Chalin Rigid Pusher Axle: 25,000 pound capacity, hub piloted or 20" spoke wheel hubs, 30/30 brake chambers, automatic slack adjusters, 1,300 cubic inch air tank and regulator kit		$10,835
☐	Watson & Chalin Rigid Tag Axle: 25,000 pound capacity, hub piloted or 20" spoke wheel hubs, 30/30 brake chambers, automatic slack adjusters, 1,300 cubic inch air tank and regulator kit, includes Tag Axle Spill Shield		$11,150
Auxiliary Axle Tire Options			
☐	255/70R-22.5 - Qty(2) load range H, 5,510 pound single max load at 120 psi with rims		$2,240
☐	275/70R-22.5 - Qty(2) load range H, 7,000 pound single max load at 120 psi with rims		$2,835
☐	11 R-22.5 - Qty(2) load range H, 6,610 pound single max load at 120 psi with rims		$2,390
* Note: All auxiliary applications must be approved by Heil prior to order acceptance			
Body Options			
☐	Tailgate Mounted Roof Access Ladder Aluminum (Only one selection allowed) Not Available with CNrG Tailgate option		$1,345
☐	Curbside Mounted Roof Access Ladder (Only one selection allowed)		$1,345
☐	High Pressure Filter Kit	B3	STD
☐	High Pressure Filter Monitor		$670
☐	Second 20 lb. Fire Extinguisher		$495
☐	Tool Box Bumper Mount - Steel	B6	$765
☐	Tool Box Bumper Mount - Aluminum		$905
☐	Rear Caution Decal		$285
☐	Wheel Chock Bracket Kit - Dual		$160
☐	Fall Protection Kit		$3,400
☐	D-Ring Fall Protection		$825
☐	Hydraulic Oil Tank Quick Disconnect Kit - For use with filter buggy		$815
☐	Perma Coat on Cab Protector		$585
☐	Spill Kit		$340
☐	Packer Mounted Retainer Teeth		$725
☐	Hydraulic Oil Tank Heater - 500 watts		$1,185
☐	Fender Extension Kit		$725
☐	California Back Up Alarm		$675
☐	Infinity Series Packer/Eject Cylinders with scrapers and hardened rods to 50 HRC - Includes Five (5) Year Packer/Eject Cylinder Warranty covering dents and dings		$3,055
CNrG Tailgate Mounted CNG - Includes Installation Fee			
☐	60 DGE CNG System		$40,425
☐	75 DGE CNG System		$42,110
☐	90 DGE CNG System		$47,865
☐	105 DGE CNG System		$54,670
FET Exempt CNrG Tailgate Mounted CNG For 20YD Bodies Only- Includes Installation Fee			
☐	60 DGE CNG System		$ 42,925
☐	75 DGE CNG System		$ 44,610
☐	90 DGE CNG System		$ 50,365
☐	105 DGE CNG System		$ 57,170
CNrG Options			
☐	Front Bumper Fill with Kill Cap		$1,250
☐	Defuel Transfer Hose - 35 ft.		$1,990
CNG Installation - Top of Body Installation			
☐	CNG Installation Charge - Includes brackets, temporary tank rental, hardware, and mounting of CNG system		$5,625
Extended Complete Body Warranty Options			
☐	Two (2) Year (Months 13-24) (Maximum 4,000 hrs. of Operation) Complete Heil Body Only Warranty (Excludes Curotto Can) Requires additional purchase of Infinity packer/eject cylinders from above		$4,400
☐	Three (3) Year (Months 13-36) (Maximum 6,000 hrs. of Operation) Complete Heil Body Only Warranty (Excludes Curotto Can) Requires additional purchase of Infinity packer/eject cylinders from above		$7,550
☐	Four (4) Year (Months 13-48) (Maximum 8,000 hrs. of Operation) Complete Heil Body Only Warranty (Excludes Curotto Can) Requires additional purchase of Infinity packer/eject cylinders from above		$10,635
☐	Five (5) Year (Months 13-60) (Maximum 10,000 hrs. of Operation) Complete Heil Body Only Warranty (Excludes Curotto Can) Requires additional purchase of Infinity packer/eject cylinders from above		$14,255
Extended Cylinder Warranty Options			
☐	Two (2) Year (Months 13-24) (Maximum 4,000 hrs. of Operation) All other Non-Infinity Cylinder For Heil Body Only Warranty (Excludes Curotto Can) Requires additional purchase of Infinity packer/eject cylinders from above		$970

☐	Three (3) Year (Months 13-36) (Maximum 6,000 hrs. of Operation) All other Non-Infinity Cylinder For Heil Body Only Warranty - (Excludes Curotto Can) Requires additional purchase of Infinity packer/eject cylinders from above		$1,945
☐	Four (4) Year (Months 13-48) (Maximum 8,000 hrs. of Operation) All other Non-Infinity Cylinder For Heil Body Only Warranty - (Excludes Curotto Can) Requires additional purchase of Infinity packer/eject cylinders from above		$2,915
☐	Five (5) Year (Months 13-60) (Maximum 10,000 hrs. of Operation) All other Non-Infinity Cylinder For Heil Body Only Warranty - (Excludes Curotto Can) Requires additional purchase of Infinity packer/eject cylinders from above		$3,395
	Paint Options		
	NOTE: LIST PAINT CODES ON PAINT DIAGRAM		
☐	Customized Paint Color - Paint Color Code NOT included in the Color Smart Brochure		$390
☐	Two Tone Paint		$1,485
☐	Paint Striping - first stripe		$1,250
☐	Paint Striping - each additional stripe		$695
☐	Metallic Paint		$5,000
☐	Clear coat Finish		$1,735
☐	Anti-Graffiti Clear coat Finish		$2,500
☐	Prime Paint Only - deduct		($1,220)
	TOTALS		
	Total from Options Above (MSRP)		**$0**
	Additional Options (Custom's, Chassis Mods, Etc.) Total		
	Subtotal		**$0**
	Dealer Discount (%)	**0%**	**$0**
	Dealer Net Price		**$0**
	Additional Discount (SPR)		
	Freight		
	Total Price per Unit		**$0**

Half/Pack Factor AFL

Paint Stripe & Accessories Requirements

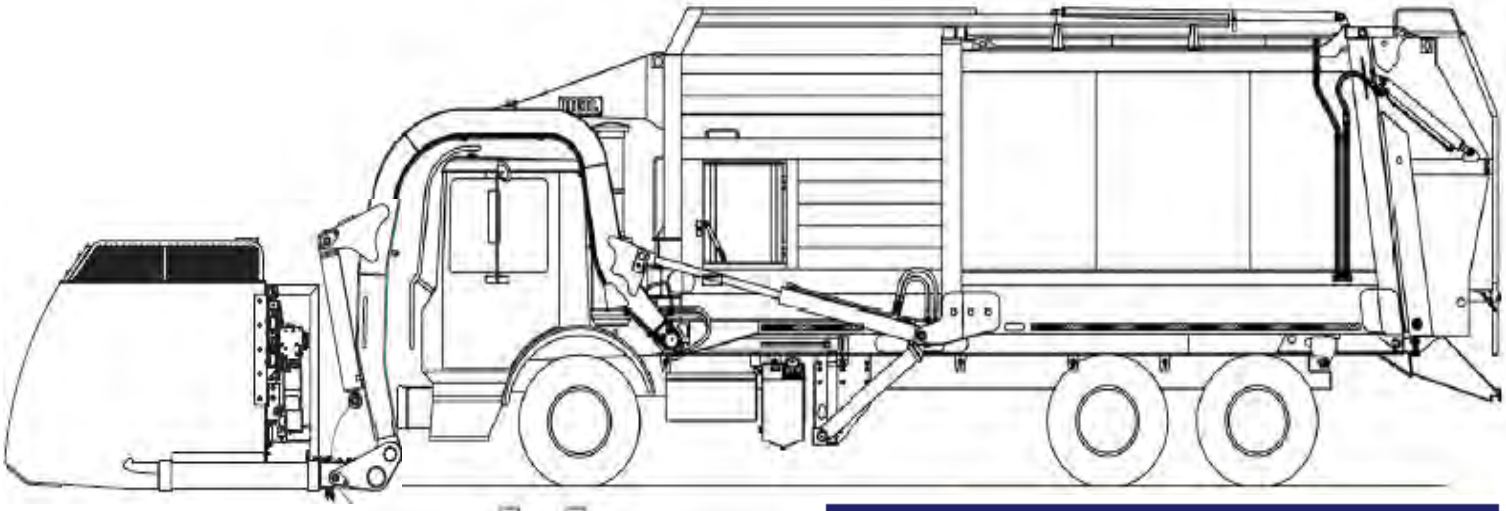

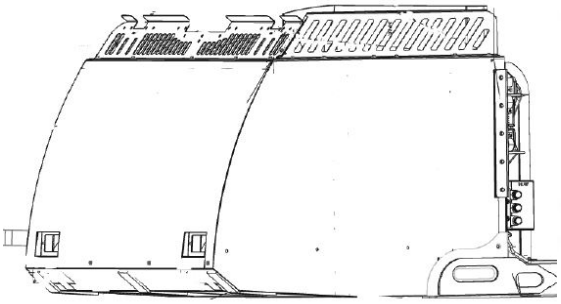

Paint and options layout detail.

Use this form to describe paint schemes.
Be specific about dimensions and details.

Sales Order #	
Customer	
Paint Color 1	
Paint Color 2	
Paint Color 3	
Chassis Make	
Wheelbase	
Body Size	
Curotto Can Paint Color	

Submitted by	
Approved by	

Half/Pack® Commercial

Featuring Odyssey™ controls

Standard Equipment Features included in Base Price

- Heavy duty sliding top door
- Hinged and completely sealed aluminum left-side body access door with step and grab handle
- Cab shield with hinged rubber tip extension - steel
- Front head closure screen with splash guard
- Under hopper liquid sump with 2 clean-out doors
- Body service props for service hoist models and service lift
- Tailgate service props
- Fully automatic Shur-Lock™ tailgate latches
- Clamp-on arms
- 8,000 lb. capacity arms - WASTEC WRP 06-1996 rated
- Four arm shaft bearing supports
- Fork cross shaft rubber bumpers
- Bolt-on rubber arm stops
- Heavy-duty forks - 1 1/2" thick x 59" grip length
- PTO mounted load sense piston pump
- Chrome-plated cylinder rods and telescopic sleeves
- Crossed packing cylinders
- Chassis frame-mounted oil tank with level / temperature gauge and suction shut-off valve
- 3-micron return line filter with magnetic trap and in-cab filter bypass monitor
- 100-micron suction line strainer
- Abrasion-resistant hydraulic hoses
- Cortex Controller ™ with InSight™ diagnostic display with integrated 3rd Eye camera feed
- Throttle advance / throttle limit kit
- Left-hand single joystick operation
- Complete array of in-cab function indicator lights
- Streetwise Hydraulics™
- Solid-state control panel
- High-pressure filter kit
- 5 lb. in-cab fire extinguisher
- Backup alarm
- Backup and license plate light
- LED center-mounted brake light
- LED duplicate high and low mount stop, turn and tail lights
- LED mid-body turn signals
- Strobe light, amber mounted on lower tailgate - in-cab switch, pump on, and reverse activated
- Front and rear mud flaps - anti-sail / anti-splash
- Rear underride guard
- Hopper floodlight
- Tailgate lock & closed indicator sensor with in-cab indicator and alarm
- Remote I/O for tailgate valve
- Greaseless tailgate hinge and lift cylinders
- Hydraulic oil temperature sensor with alarm
- Body hydraulic pressure sensor
- Low oil level sensor with light, buzzer, and pump shut-off
- Shovel kit mounted on back of the packer
- Severe-duty wear bar kit
- 3" sump drain on street side and curb side
- Arm/fork overheight warning kit
- 20 lb. fire extinguisher
- FMVSS #108 clearance lights and reflectors
- ICC reflective tape
- Rear camera bracket and flood lights - reverse activated
- Body undercoating
- Customer's choice of one color finish paint from Color Smart brochure
- Standard 1-year warranty (2,000 Hours of Operation)
- ANSI Z 245.1-2012 compliant
- Arm guides mounted to front bumper

Effective December 1, 2017 HP Odyssey Commercial Sales Order Form

Base Units HP Odyssey Commercial			
☐	20 cubic yard		$126,315
☐	23 cubic yard		$125,765
☐	28 cubic yard		$126,420
☐	32 cubic yard		$129,860
☐	Service Hoist Kit - 187" Wheelbase 5 Axle Units WILL NOT accept the service hoist option*	B9	$4,385
	*5 Axle 187" Wheelbase - Hendrickson Auxiliary Axles Only with 275/R70/22.5 or smaller tires.		
Hopper Size			12 yd³
CHASSIS MUST COMFORM WITH HEIL'S MOST CURRENT CHASSIS SPECIFICATIONS AT WWW.HEIL.COM			
* NOTE: Red numbers reference Option Photo Index			
Mounting Options			
☐	Full Factory Mount for Service Hoist or Serviceable Eject - Includes Body Props and Rear Pivot		$5,505
☐	Mount at Dealer Destination		$735
Power Take Off / Pump Options			
☐	PTO Mounted Load Sense Piston pump - Includes PTO		STD
Control Options			
☐	Throttle Limit Kit		$420
☐	Left Hand 2-Lever Electric Control in lieu of Single Axis Joystick	CE6	$535
☐	Left Hand Single Axis Joystick Electric Control in lieu of Multifunction Joystick		STD
☐	Streetside mounted Outside 4 Button Electric Rocker Switch Controls for Arms, Forks, and Packer circuits. (Throttle Advance Not Included)		$1,960
☐	Streetside mounted Outside Dual Lever controls and 4 Button Electric Rocker Switch Controls for Pump Enable, Arms, Forks, and Packer circuits. Includes Throttle advance.		$2,335
Lighting and Electrical Accessories			
☐	Single Led Hopper Mounted Container Work light		$590
☐	Multi-Function (SMART) LED Strobe / Turn Lamps		$610
☐	Body Side Backing Assist Lights - LED		$505
☐	Dual Oval Flat LED Strobes Mounted Mid-T/G - in-cab switch, pump on, and reverse activated	L15	$1,055
☐	Dual Cab Guard Mounted Flood Lights		$495
Camera Systems			
All camera systems are mounted with protective camera brackets and twin tailgate flood lights.			
CAMERA MONITOR LOCATION WILL BE CAB ROOF MOUNTED Swivel monitor bracket will be provided for dual drive chassis			
360 ° Camera Systems and Options			
☐	360 Degree Camera Package - Includes 360 degree camera system (4 camera), DVR capability, Dash Camera, Operator Facing Camera, and Hopper Camera.		$10,260
☐	360 Base Camera System - Includes 360 (4 Camera System) for Monitoring Only		$8,440
☐	Add DVR for Recording Function - Includes Dash Camera for Road Facing View		$1,680
☐	Add Operator Facing Camera for Operator Monitoring		$385
☐	Add Hopper Camera		$1,035
3rd Eye Camera Systems			
☐	3rd Eye Single Camera System with Single Camera Mounted on Tailgate		$1,580
☐	3rd Eye Double Camera System (Cameras on T/G & LH Cab)		$2,030
☐	3rd Eye Double Camera System (Cameras on T/G & RH Cab)		$2,030
☐	3rd Eye Double Camera System (Cameras on T/G & RH Alley)		$2,030
☐	3rd Eye Double Camera System (Cameras on T/G & Hopper)		$2,030

Effective December 1, 2017 HP Odyssey Commercial Sales Order Form

	Load Cell Scale Systems		
☐	Heil Optimum Payload System (HOPS) using Air-Weigh Axle Scales	CE20	$8,740
☐	Air-Weigh Axle Scale System without Interlock	CE20	$8,155
	Auxiliary Axles and Tires		
	* NOTE: All axles MUST BE installed with tires so chassis can be re-certified to new GAWR and GVWR ratings		
☐	Watson & Chalin Self Steering Pusher Axle: 13,500 pound capacity, hub piloted or 20" spoke wheel hubs, automatic slack adjusters, type 16 air chambers, steering stabilizer kit and reverse lift kit -		$14,145
☐	Watson & Chalin Self Steering Tag Axle: 13,500 pound capacity, hub piloted or 20" spoke wheel hubs, automatic slack adjusters, type 16 air chambers, steering stabilizer kit and reverse lift kit, includes Tag Axle Spill Shield		$14,455
☐	Watson & Chalin Rigid Pusher Axle: 20,000 pound capacity, hub piloted or 20" spoke wheel hubs, 30/30 brake chambers, automatic slack adjusters, 1,300 cubic inch air tank and regulator kit		$10,835
☐	Watson & Chalin Rigid Tag Axle: 20,000 pound capacity, hub piloted or 20" spoke wheel hubs, 30/30 brake chambers, automatic slack adjusters, 1,300 cubic inch air tank and regulator kit, includes Tag Axle Spill Shield		$11,150
☐	255/70R-22.5 - Qty(2) load range H, 5,510 pound single max load at 120 psi with rims		$2,240
☐	275/70R-22.5 - Qty(2) load range H, 7,000 pound single max load at 120 psi with rims		$2,835
☐	11 R-22.5 - Qty(2) load range H, 6,610 pound single max load at 120 psi with rims		$2,390
	* Note: All auxiliary applications must be approved by Heil prior to order acceptance		
	Body Options		
☐	Roof Access Ladder		$1,345
☐	Curbside Mounted Roof Access Ladder (Only one selection allowed)		$1,345
☐	Hopper Floor Liner (3/16" - AR400)		$1,795
☐	Hopper Floor Liner (1/4" - AR400)		$2,855
☐	Body Roof Retainer Teeth - 2 rows at front of body - Minimizes springback in cardboard and recycling applications	B26	$1,040
☐	High Pressure Filter Kit	B3	STD
☐	High Pressure Filter Monitor		$670
☐	Second 20 lb. Fire Extinguisher		$495
☐	Tool Box Bumper Mount - Steel	B6	$765
☐	Tool Box Bumper Mount - Aluminum		$905
☐	Cab Protector Extension Raise - Manual Jack		$1,140
☐	Rear Caution Decal		$285
☐	Wheel Chock Kit - Dual		$160
☐	Fall Protection Kit		$3,400
☐	D-Ring Fall Protection		$825
☐	Hydraulic Oil Tank Quick Disconnect Kit - For use with filter buggy		$815
☐	Perma Coat on Cab Protector		$590
☐	Hydraulic Raise Cab Protector Kit		$5,335
☐	Spill Kit		$340
☐	Packer Mounted Retainer Teeth		$725
☐	Hydraulic Oil Tank Heater - 500 watts		$1,185
☐	Fender Extension Kit		$725
☐	California Back Up Alarm		$675
☐ ‡	**Infinity Series Packer/Eject Cylinders** with scrapers and hardened rods to 50 HRC - Includes Five (5) Year Packer/Eject Cylinder Only Warranty that covers dents and dings (This Option is Required if purchasing extended warranty's below)		$3,055
☐ ‡	**Lightning Cylinder Package**: reduces front loader arm cycle time by up to 5 seconds and reduces front loader arm lifting capacity to a maximum of 5,500 lbs. This package is available via Custom request only, and also requires an End User signed waiver acknowledging the reduced arm lifting capacity of these cylinders.	(Custom Required)	

Effective December 1, 2017 HP Odyssey Commercial Sales Order Form

	CNrG Tailgate Mounted CNG - Includes Installation Fee		
☐	60 DGE CNG System		$40,425
☐	75 DGE CNG System		$42,110
☐	90 DGE CNG System		$47,865
☐	105 DGE CNG System		$54,670
	FET Exempt CNrG Tailgate Mounted CNG For 20YD Bodies Only- Includes Installation Fee		
☐	60 DGE CNG System		$42,925
☐	75 DGE CNG System		$44,610
☐	90 DGE CNG System		$50,365
☐	105 DGE CNG System		$57,170
	CNrG Options		
☐	Front Bumper Fill with Kill Cap		$1,250
☐	Defuel Transfer Hose - 35 ft.		$1,995
	CNG Installation - Top of Body Installation		
☐	CNG Installation Charge - Includes brackets, temporary tank rental, hardware, and mounting of CNG system		$5,625
	Extended Complete Body Warranty Options		
☐	Two (2) Year (Months 13-24) (Maximum 4,000 hrs. of Operation) Complete Heil Body Warranty Requires additional purchase of Infinity packer/eject cylinders from above		$4,400
☐	Three (3) Year (Months 13-36) (Maximum 6,000 hrs. of Operation) Complete Heil Body Warranty Requires additional purchase of Infinity packer/eject cylinders from above		$7,550
☐	Four (4) Year (Months 13-48) (Maximum 8,000 hrs. of Operation) Complete Heil Body Warranty Requires additional purchase of Infinity packer/eject cylinders from above		$10,635
☐	Five (5) Year (Months 13-60) (Maximum 10,000 hrs. of Operation) Complete Heil Body Warranty Requires additional purchase of Infinity packer/eject cylinders from above		$14,255
	Extended Cylinder Warranty Options		
☐	Two (2) Year (Months 13-24) (Maximum 4,000 hrs. of Operation) All other Non-Infinity Cylinder Warranty - Requires additional purchase of Infinity packer/eject cylinders from above		$970
☐	Three (3) Year (Months 13-36) (Maximum 6,000 hrs. of Operation) All other Non-Infinity Cylinder Warranty - Requires additional purchase of Infinity packer/eject cylinders from above		$1,945
☐	Four (4) Year (Months 13-48) (Maximum 8,000 hrs. of Operation) All other Non-Infinity Cylinder Warranty - Requires additional purchase of Infinity packer/eject cylinders from above		$2,915
☐	Five (5) Year (Maximum 10,000 hrs. of Operation) All other Non-Infinity Cylinder Warranty - Requires purchase of Infinity packer or eject Cylinders from above		$3,395
	Paint Options		
	NOTE: LIST PAINT CODES ON PAINT DIAGRAM		
☐	Customized Paint Color - Paint Color Code NOT included in the Color Smart Brochure		$390
☐	Two Tone Paint		$1,485
☐	Paint Striping - first stripe		$1,250
☐	Paint Striping - each additional stripe		$695
☐	Metallic Paint		$5,000
☐	Clear coat Finish		$17,635
☐	Anti-Graffiti Clear coat Finish		$2,500
☐	Prime Paint Only - deduct		($1,220)
	TOTALS		
	Total from Options Above (MSRP)		**$0**
	Additional Options (Custom's, Chassis Mods, Etc.) Total		
	Subtotal		**$0**
	Dealer Discount (%)	**0%**	**$0**
	Dealer Net Price		**$0**
	Additional Discount (SPR)		
	Freight		
	Total Price per Unit		**$0**

HP ODYSSEY COMMERCIAL

Paint Stripe & Accessories Requirements

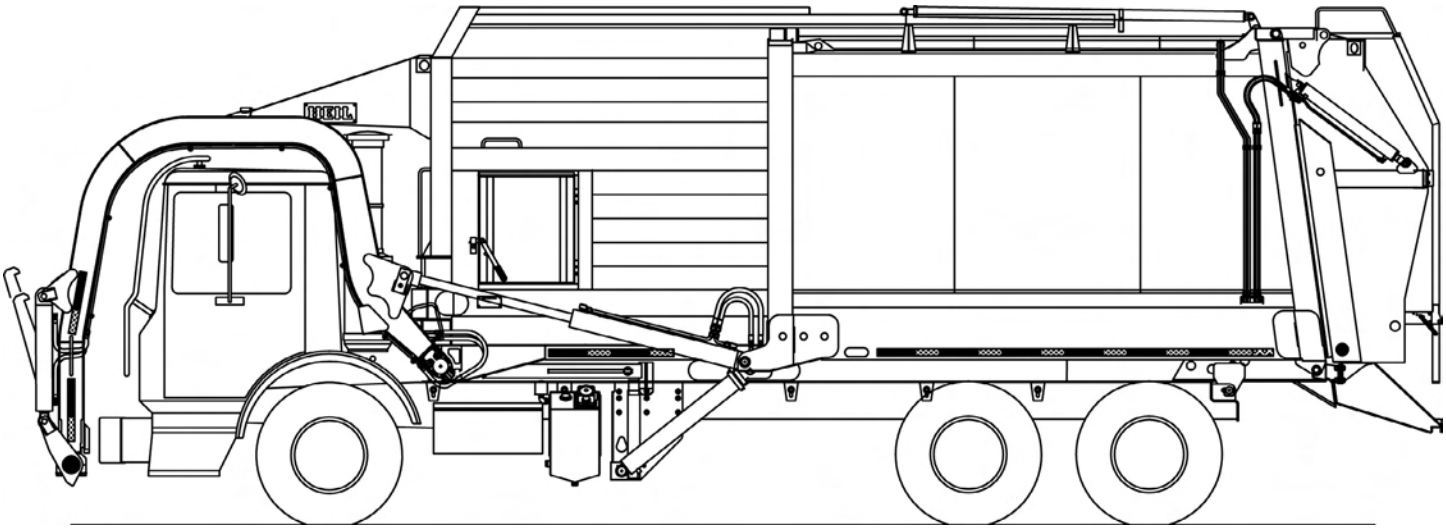

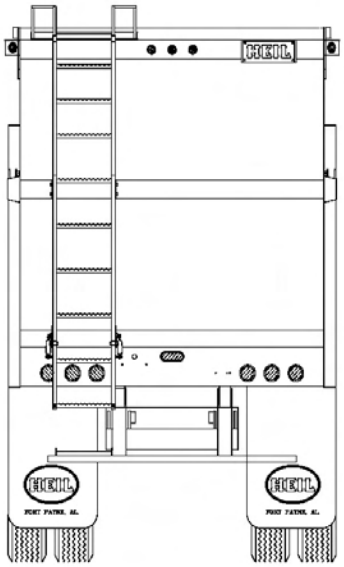

PAINT AND OPTIONS LAYOUT DETAIL
USE THIS FORM TO DESCRIBE PAINT SCHEMES
BE SPECIFIC ABOUT DIMENSIONS AND DETAILS

Sales Order #		Submitted by	
Customer			
Paint Color and Code 1			
Paint Color and Code 2			
Paint Color and Code 3			
Chassis Make			
Chassis Model			
Wheelbase			
Body Size		Approved by	

Half/Pack® Sierra Commercial

Featuring Odyssey™ controls

Standard Equipment Features included in Base Price

- Hinged and completely sealed aluminum left-side body access door with step and grab handle
- Full aluminum cab shield with air cylinder assisted raise
- Under hopper liquid sump with 2 clean-out doors
- Body service props for service hoist models and service lift
- Tailgate service props
- Fully automatic Shur-Lock™ tailgate latches
- Clamp-on arms
- 8,000 lb. capacity arms - WASTEC WRP 06-1996 rated
- Four arm shaft bearing supports
- Fork cross shaft rubber bumpers
- Bolt-on rubber arm stops
- Heavy-duty forks - 1 1/2" thick x 59" grip length
- Crossed packing cylinders
- Chrome-plated cylinder rods and telescopic sleeves
- Chassis frame-mounted oil tank with level / temperature gauge and suction shut-off valve
- 3-micron return line filter with magnetic trap and in-cab filter bypass monitor
- 100-micron suction line strainer
- Abrasion-resistant hydraulic hoses
- Cortex Controller ™ with InSight™ diagnostic display with integrated 3rd Eye camera feed
- Throttle advance / throttle limit kit
- Left-hand single joystick
- Complete array of in-cab function indicator lights
- 5 lb. in-cab fire extinguisher
- Solid-state control panel
- Streetwise Hydraulics™
- Tailgate lock & closed indicator sensor with in-cab indicator and alarm
- Remote I/O for tailgate valve
- Greaseless tailgate hinge and lift cylinders
- Hydraulic oil temperature sensor with alarm
- Body hydraulic pressure sensor
- Backup alarm
- Hopper floodlight
- Low oil sensor light, buzzer and pump shutoff
- Severe-duty wear bar kit
- 3" sump drain on street side and curb side
- Remote packer lube kit
- Shovel kit mounted on back of the packer
- Arm / fork over height warning kit
- Backup and license plate light
- LED center-mounted brake light
- LED duplicate high and low mount stop, turn, and tail lights
- LED mid-body turn signals
- Strobe light, amber mounted on lower tailgate - in-cab switch, pump on, and reverse activated
- Front and rear mud flaps - anti-sail / anti-splash
- Rear underride guard
- 20 lb. fire extinguisher
- FMVSS #108 clearance lights and reflectors
- ICC reflective tape
- Rear camera bracket and flood lights - reverse activated
- Body undercoating
- Customer's choice of one color finish paint from Color Smart brochure
- Standard 1-year warranty (2,000 Hours of Operation)
- ANSI Z 245.1-2012 compliant
- Safety triangle
- Cavity coat and joint sealer
- Aluminum top door

Effective December 1, 2017 Sierra Odyssey Commercial Sales Order Form

Base Units Sierra Odyssey Commercial			
☐	28 cubic yard		$135,725
☐	Service Hoist Kit - 187" Wheelbase 5 Axle Units WILL NOT accept the service hoist option*	B9	$4,385
	*5 Axle 187" Wheelbase - Hendrickson Auxiliary Axles Only with 275/R70/22.5 or smaller tires.		
Hopper Size			12 yd³
CHASSIS MUST COMFORM WITH HEIL'S MOST CURRENT CHASSIS SPECIFICATIONS AT WWW.HEIL.COM			
* NOTE: Red numbers reference Option Photo Index			
Mounting Options			
☐	Full Factory Mount for Service Hoist or Serviceable Eject - Includes Body Props and Rear Pivot		$5,505
☐	Mount at Dealer Destination		$735
Power Take Off / Pump Options			
☐	PTO Mounted Load Sense Piston pump - Includes PTO		STD
Control Options			
☐	Throttle Limit Kit		$420
☐	Left Hand 2-Lever Electric Control in lieu of Single Axis Joystick	CE6	$535
☐	Left Hand Single Axis Joystick Electric Control in lieu of Multifunction Joystick		STD
☐ #	Streetside mounted Outside 4 Button Electric Rocker Switch Controls for Arms, Forks, and Packer circuits. (Throttle Advance Not Included)		$1,960
☐	Streetside mounted Outside Dual Lever controls and 4 Button Electric Rocker Switch Controls for Pump Enable, Arms, Forks, and Packer circuits. Includes Throttle advance.		$2,335
Lighting and Electrical Accessories			
☐	Single Led Hopper Mounted Container Work light		$590
☐	Multi-Function (SMART) LED Strobe / Turn Lamps		$610
☐	Body Side Backing Assist Lights - LED		$505
☐	Dual Oval Flat LED Strobes Mounted Mid-T/G - in-cab switch, pump on, and reverse activated	L15	$1,055
☐	Dual Cab Guard Mounted Flood Lights		$495
Camera Systems			
All camera systems are mounted with protective camera brackets and twin tailgate flood lights.			
CAMERA MONITOR LOCATION WILL BE CAB ROOF MOUNTED			
Swivel monitor bracket will be provided for dual drive chassis			
360 ˚ Camera Systems and Options			
☐	360 Degree Camera Package - Includes 360 degree camera system (4 camera), DVR capability, Dash Camera, Operator Facing Camera, and Hopper Camera.		$10,260
☐	360 Base Camera System - Includes 360 (4 Camera System) for Monitoring Only		$8,440
☐	Add DVR for Recording Function - Includes Dash Camera for Road Facing View		$1,680
☐	Add Operator Facing Camera for Operator Monitoring		$385
☐	Add Hopper Camera		$1,035
3rd Eye Camera Systems			
☐	3rd Eye Single Camera System with Single Camera Mounted on Tailgate		$1,580
☐	3rd Eye Double Camera System (Cameras on T/G & LH Cab)		$2,030
☐	3rd Eye Double Camera System (Cameras on T/G & RH Cab)		$2,030
☐	3rd Eye Double Camera System (Cameras on T/G & RH Alley)		$2,030
☐	3rd Eye Double Camera System (Cameras on T/G & Hopper)		$2,030

Effective December 1, 2017 Sierra Odyssey Commercial Sales Order Form

Load Cell Scale Systems			
☐	Heil Optimum Payload System (HOPS) using Air-Weigh Axle Scales	CE20	$8,740
☐	Air-Weigh Axle Scale System without Interlock	CE20	$8,155
Auxiliary Axles and Tires			
* NOTE: All axles MUST BE installed with tires so chassis can be re-certified to new GAWR and GVWR ratings			
☐	Watson & Chalin Self Steering Pusher Axle: 13,500 pound capacity, hub piloted or 20" spoke wheel hubs, automatic slack adjusters, type 16 air chambers, steering stabilizer kit and reverse lift kit -		$14,145
☐	Watson & Chalin Self Steering Tag Axle: 13,500 pound capacity, hub piloted or 20" spoke wheel hubs, automatic slack adjusters, type 16 air chambers, steering stabilizer kit and reverse lift kit, includes Tag Axle Spill Shield		$14,455
☐	Watson & Chalin Rigid Pusher Axle: 20,000 pound capacity, hub piloted or 20" spoke wheel hubs, 30/30 brake chambers, automatic slack adjusters, 1,300 cubic inch air tank and regulator kit		$10,835
☐	Watson & Chalin Rigid Tag Axle: 20,000 pound capacity, hub piloted or 20" spoke wheel hubs, 30/30 brake chambers, automatic slack adjusters, 1,300 cubic inch air tank and regulator kit, includes Tag Axle Spill Shield		$11,150
Auxiliary Axle Tire Options			
☐	255/70R-22.5 - Qty(2) load range H, 5,510 pound single max load at 120 psi with rims		$2,240
☐	275/70R-22.5 - Qty(2) load range H, 7,000 pound single max load at 120 psi with rims		$2,835
☐	11 R-22.5 - Qty(2) load range H, 6,610 pound single max load at 120 psi with rims		$2,390
* Note: All auxiliary applications must be approved by Heil prior to order acceptance			
Body Options			
☐	Sliding Top Door - May not be compatible with roof mounted CNG system		$3,835
☐	Tailgate Mounted Roof Access Ladder (Only one selection allowed) Not Available with CNrG Tailgate option		$1,345
☐	Curbside Mounted Roof Access Ladder (Only one selection allowed)		$1,345
☐	Hopper Floor Liner (3/16" - AR400)		$1,795
☐	Hopper Floor Liner (1/4" - AR400)		$2,855
☐	Body Roof Retainer Teeth - 2 rows at front of body - Minimizes springback in cardboard and recycling applications	B26	$1,040
☐	High Pressure Filter Kit	B3	STD
☐	High Pressure Filter Monitor		$670
☐	Second 20 lb. Fire Extinguisher		$495
☐	Tool Box Bumper Mount - Steel	B6	$765
☐	Tool Box Bumper Mount - Aluminum		$905
☐	Rear Caution Decal		$285
☐	Wheel Chock Kit - Dual		$160
☐	Fall Protection Kit		$3,400
☐	D-Ring Fall Protection		$825
☐	Hydraulic Oil Tank Quick Disconnect Kit - For use with filter buggy		$815
☐	Perma Coat on Cab Protector		$590
☐	Hydraulic Raise Cab Protector Kit - Will Receive Steel Cab Shield in Lieu of Aluminum		$5,335
☐	Spill Kit		$340
☐	Packer Mounted Retainer Teeth		$725
☐	Hydraulic Oil Tank Heater - 500 watts		$1,185
☐	Fender Extension Kit		$725
☐	California Back Up Alarm		$675
☐	**Infinity Series Packer/Eject Cylinders** with scrapers and hardened rods to 50 HRC - Includes Five (5) Year Packer/Eject Cylinder Only Warranty that covers dents and dings (This Option is Required if purchasing extended warranty's below)		$3,055
☐	**Lightning Cylinder Package**: reduces front loader arm cycle time by up to 5 seconds and reduces front loader arm lifting capacity to a maximum of 5,500 lbs. This package is available via Custom request only, and also requires an End User signed waiver acknowledging the reduced arm lifting capacity of these cylinders.		(Custom Required)

Effective December 1, 2017 Sierra Odyssey Commercial Sales Order Form

	CNrG Tailgate Mounted CNG - Includes Installation Fee		
☐	60 DGE CNG System		$40,425
☐	75 DGE CNG System		$42,110
☐	90 DGE CNG System		$47,865
☐	105 DGE CNG System		$54,670
	CNrG Options		
☐	Front Bumper Fill with Kill Cap		$1,250
☐	Defuel Transfer Hose - 35 ft.		$1,995
	CNG Installation - Top of Body Installation		
☐	CNG Installation Charge - Includes brackets, temporary tank rental, hardware, and mounting of CNG system		$5,625
	Extended Complete Body Warranty Options		
☐	Two (2) Year (Months 13-24) (Maximum 4,000 hrs. of Operation) Complete Heil Body Warranty Requires additional purchase of Infinity packer/eject cylinders from above		$4,400
☐	Three (3) Year (Months 13-36) (Maximum 6,000 hrs. of Operation) Complete Heil Body Warranty Requires additional purchase of Infinity packer/eject cylinders from above		$7,550
☐	Four (4) Year (Months 13-48) (Maximum 8,000 hrs. of Operation) Complete Heil Body Warranty Requires additional purchase of Infinity packer/eject cylinders from above		$10,635
☐	Five (5) Year (Months 13-60) (Maximum 10,000 hrs. of Operation) Complete Heil Body Warranty Requires additional purchase of Infinity packer/eject cylinders from above		$14,255
	Extended Cylinder Warranty Options		
☐	Two (2) Year (Months 13-24) (Maximum 4,000 hrs. of Operation) All other Non-Infinity Cylinder Warranty - Requires additional purchase of Infinity packer/eject cylinders from above		$970
☐	Three (3) Year (Months 13-36) (Maximum 6,000 hrs. of Operation) All other Non-Infinity Cylinder Warranty - Requires additional purchase of Infinity packer/eject cylinders from above		$1,945
☐	Four (4) Year (Months 13-48) (Maximum 8,000 hrs. of Operation) All other Non-Infinity Cylinder Warranty - Requires additional purchase of Infinity packer/eject cylinders from above		$2,915
☐	Five (5) Year (Maximum 10,000 hrs. of Operation) All other Non-Infinity Cylinder Warranty - Requires purchase of Infinity packer or eject Cylinders from above		$3,395
	Paint Options		
NOTE: LIST PAINT CODES ON PAINT DIAGRAM			
☐	Customized Paint Color - Paint Color Code NOT included in the Color Smart Brochure		$390
☐	Two Tone Paint		$1,485
☐	Paint Striping - first stripe		$1,250
☐	Paint Striping - each additional stripe		$695
☐	Metallic Paint		$5,000
☐	Clear coat Finish		$1,735
☐	Anti-Graffiti Clear coat Finish		$2,500
☐	Prime Paint Only - deduct		($1,220)
	TOTALS		
	Total from Options Above (MSRP)		**$0**
	Additional Options (SOARs, Chassis Mods, Etc.) Total		
	Subtotal		**$0**
	Dealer Discount (%)	**0%**	**$0**
	Dealer Net Price		**$0**
	Additional Discount (SPR)		
	Freight		
	Total Price per Unit		**$0**

SIERRA ODYSSEY COMMERCIAL

Paint Stripe & Accessories Requirements

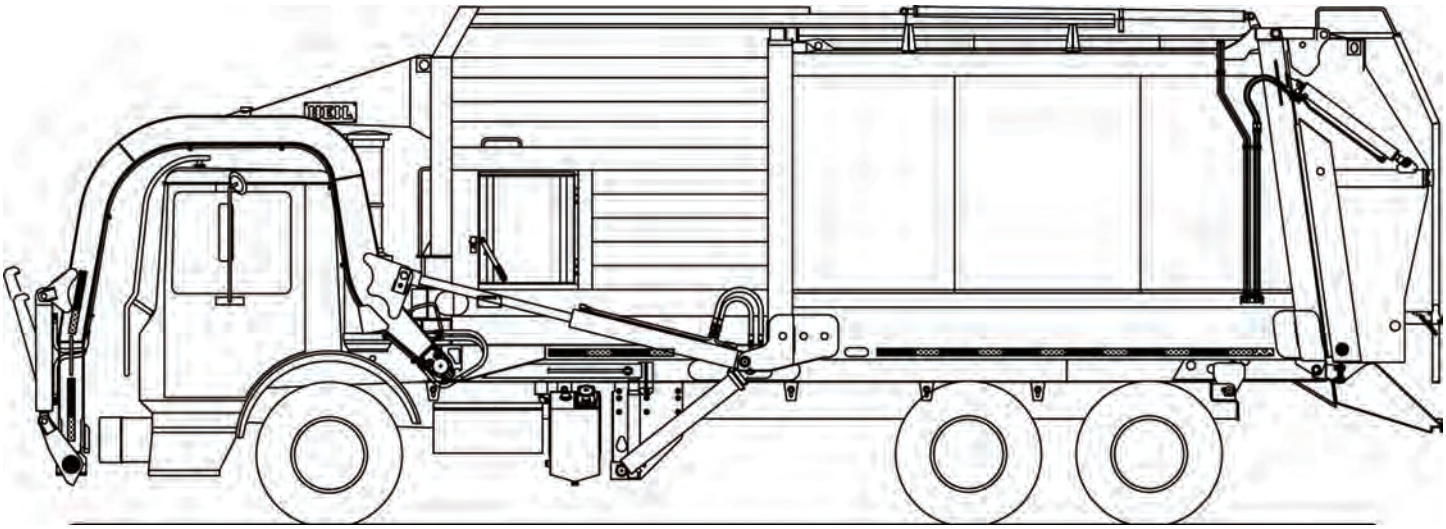

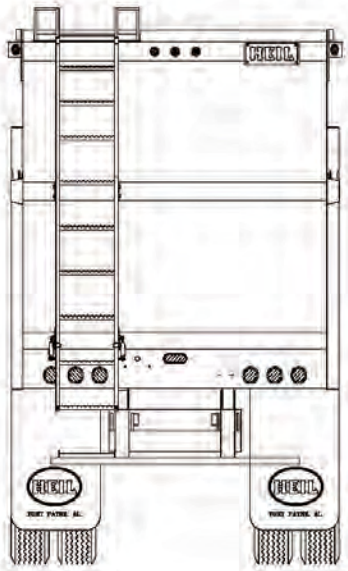

PAINT AND OPTIONS LAYOUT DETAIL
USE THIS FORM TO DESCRIBE PAINT SCHEMES
BE SPECIFIC ABOUT DIMENSIONS AND DETAILS

Sales Order #		Submitted by	
Customer			
Paint Color and Code 1			
Paint Color and Code 2			
Paint Color and Code 3			
Chassis Make			
Chassis Model			
Wheelbase			
Body Size		Approved by	

Half/Pack® Freedom Commercial

Featuring OdysseyTM controls

Standard Equipment Features included in Base Price

- Hinged and completely sealed left-side body access door with step and grab handle
- Full aluminum cab shield with air cylinder assisted raise
- 3" underbody gate valve on street side for liquid removal
- Front head closure screen with splash guard
- Body service props for service lift
- Tailgate service props
- Fully automatic Shur-Lock™ tailgate locks
- Clamp-on arms
- 8,000 lb. capacity arms - WASTEC WRP 06-1996 rated
- Four arm shaft bearing supports
- Bolt-on rubber arm stops
- Heavy-duty forks - 1" thick x 59" grip length
- PTO mounted load sense piston pump
- Chrome-plated cylinder rods and telescopic sleeves
- Chassis frame-mounted aluminum oil tank with level / temperature gauge and suction shut-off valve
- 3-micron return line filter with magnetic trap and in-cab filter bypass monitor
- High-pressure filter kit
- Heil Optimum Payload System - HOPS™
- 100-micron suction line strainer
- Abrasion-resistant hydraulic hoses
- Cortex Controller ™ with InSight™ diagnostic display with integrated 3rd Eye camera feed
- Throttle advance / throttle limit kit
- Left-hand single joystick
- Complete array of in-cab function indicator lights
- 5 lb. in-cab fire extinguisher
- Solid-state control panel
- Streetwise Hydraulics™
- Tailgate lock & closed indicator sensor with in cab indicator and alarm
- Remote I/O for tailgate valve
- Greaseless tailgate hinge and lift cylinders
- Hydraulic oil temperature sensor with alarm
- Body hydraulic pressure sensor
- Backup alarm
- Hopper flood light
- Low oil level sensor light, buzzer, and pump shut-off
- Severe-duty wear bar kit
- Remote packer lube kit
- Shovel kit mounted on back of the packer
- Arm / fork overweight warning kit
- Backup light and license plate light
- LED center-mounted brake light
- LED duplicate high and low mount stop, turn, and tail lights
- LED mid-body turn signals
- Strobe light, amber mounted on lower tailgate - in-cab switch, pump on, and reverse activated
- Front and rear mud flaps - anti-sail / anti-splash
- Rear underride guard
- 20 lb. fire extinguisher
- FMVSS #108 clearance lights & reflectors
- ICC reflective tape
- Rear camera bracket and flood lights - reverse activated
- Body undercoating
- Customer's choice of one color finish paint from Color Smart brochure
- Standard 1-year warranty (2,000 Hours of Operation)
- ANSI Z 245.1-2012 compliant
- Safety triangle
- Cavity and joint sealer

Effective December 1, 2017 Freedom Odyssey Commercial Sales Order Form

Base Units Freedom Odyssey Commercial			
☐	20 cubic yard		$141,465
☐	23 cubic yard		$140,925
☐	28 cubic yard		$141,465
☐	Service Hoist Kit - 187" Wheelbase 5 Axle Units WILL NOT accept the service hoist option*	B9	$4,385
	*5 Axle 187" Wheelbase - Hendrickson Auxiliary Axles Only with 275/R70/22.5 or smaller tires.		
Hopper Size			12 yd³
CHASSIS MUST COMFORM WITH HEIL'S MOST CURRENT CHASSIS SPECIFICATIONS AT WWW.HEIL.COM			
* NOTE: Red numbers reference Option Photo Index			
Mounting Options			
☐	Full Factory Mount for Service Hoist or Serviceable Eject - Includes Body Props and Rear Pivot		$5,505
☐	Mount at Dealer Destination		$735
Power Take Off / Pump Options			
☐	PTO Mounted Load Sense Piston pump - Includes PTO		STD
Control Options			
☐	Throttle Limit Kit		$420
☐	Left Hand 2-Lever Electric Control in lieu of Single Axis Joystick	CE6	STD
☐	Left Hand Single Axis Joystick Electric Control in lieu of Multifunction Joystick		$535
☐	Streetside mounted Outside 4 Button Electric Rocker Switch Controls for Arms, Forks, and Packer circuits. (Throttle Advance Not Included)		$1,960
☐	Streetside mounted Outside Dual Lever controls and 4 Button Electric Rocker Switch Controls for Pump Enable, Arms, Forks, and Packer circuits. Includes Throttle advance.		$2,335
Lighting and Electrical Accessories			
☐	Single Led Hopper Mounted Container Work light		$590
☐	Multi-Function (SMART) LED Strobe / Turn Lamps		$610
☐	Body Side Backing Assist Lights - LED		$505
☐	Dual Oval Flat LED Strobes Mounted Mid-T/G - in-cab switch, pump on, and reverse activated	L15	$1,055
☐	Dual Cab Guard Mounted Flood Lights		$495
Camera Systems			
All camera systems are mounted with protective camera brackets and twin tailgate flood lights			
CAMERA MONITOR LOCATION WILL BE CAB ROOF MOUNTED Swivel monitor bracket will be provided for dual drive chassis			
360 ˚ Camera Systems and Options			
☐	360 Degree Camera Package - Includes 360 degree camera system (4 camera), DVR capability, Dash Camera, Operator Facing Camera, and Hopper Camera.		$10,260
☐	360 Base Camera System - Includes 360 (4 Camera System) for Monitoring Only		$8,440
☐	Add DVR for Recording Function - Includes Dash Camera for Road Facing View		$1,680
☐	Add Operator Facing Camera for Operator Monitoring		$385
☐	Add Hopper Camera		$1,035
3rd Eye Camera Systems			
☐	3rd Eye Single Camera System with Single Camera Mounted on Tailgate		$1,580
☐	3rd Eye Double Camera System (Cameras on T/G & LH Cab)		$2,030
☐	3rd Eye Double Camera System (Cameras on T/G & RH Cab)		$2,030
☐	3rd Eye Double Camera System (Cameras on T/G & RH Alley)		$2,030
☐	3rd Eye Double Camera System (Cameras on T/G & Hopper)		$2,030

Auxiliary Axles and Tires

* NOTE: All axles MUST BE installed with tires so chassis can be re-certified to new GAWR and GVWR ratings

☐	Watson & Chalin Self Steering Pusher Axle: 13,000 pound capacity, hub piloted or 20" spoke wheel hubs, automatic slack adjusters, type 16 air chambers, steering stabilizer kit and reverse lift kit		$14,145
☐	Watson & Chalin Self Steering Tag Axle: 13,000 pound capacity, hub piloted or 20" spoke wheel hubs, automatic slack adjusters, type 16 air chambers, steering stabilizer kit and reverse lift kit, includes Tag Axle Spill Shield		$14,455
☐	Watson & Chalin Rigid Pusher Axle: 25,000 pound capacity, hub piloted or 20" spoke wheel hubs, 30/30 brake chambers, automatic slack adjusters, 1,300 cubic inch air tank and regulator kit		$10,835
☐	Watson & Chalin Rigid Tag Axle: 25,000 pound capacity, hub piloted or 20" spoke wheel hubs, 30/30 brake chambers, automatic slack adjusters, 1,300 cubic inch air tank and regulator kit, includes Tag Axle Spill Shield		$11,150
☐	255/70R-22.5 - Qty(2) load range H, 5,510 pound single max load at 120 psi with rims		$2,240
☐	275/70R-22.5 - Qty(2) load range H, 7,000 pound single max load at 120 psi with rims		$2,835
☐	11 R-22.5 - Qty(2) load range H, 6,610 pound single max load at 120 psi with rims		$2,390

* Note: All auxiliary applications must be approved by Heil prior to order acceptance

Body Options

☐	Sliding Top Door - Aluminum - May not be compatible with roof mounted CNG system	B28	$4,855
☐	Tailgate Mounted Roof Access Ladder (Only one selection allowed) Not Available with CNrG Tailgate option		$1,345
☐	Curbside Mounted Roof Access Ladder (Only one selection allowed)		$1,345
☐	High Pressure Filter Kit	B3	STD
☐	High Pressure Filter Monitor		$670
☐	Second 20 lb. Fire Extinguisher		$495
☐	Tool Box Bumper Mount - Steel	B6	$765
☐	Tool Box Bumper Mount - Aluminum		$905
☐	Rear Caution Decal		$285
☐	Wheel Chock Kit - Dual		$160
☐	Fall Protection Kit		$3,400
☐	D-Ring Fall Protection		$825
☐	Hydraulic Oil Tank Quick Disconnect Kit - For use with filter buggy		$815
☐	Perma Coat on Cab Protector		$590
☐	Spill Kit		$340
☐	Packer Mounted Retainer Teeth		$725
☐	Hydraulic Oil Tank Heater - 500 watts		$1,185
☐	Fender Extension Kit		$725
☑	California Back Up Alarm		$675
☐	**Infinity Series Packer/Eject Cylinders** with scrapers and hardened rods to 50 HRC - Includes Five (5) Year Packer/Eject Cylinder Only Warranty that covers dents and dings (This Option is Required if purchasing extended warranty's below)		$3,055
☐	**Lightning Cylinder Package**: reduces front loader arm cycle time by up to 5 seconds and reduces front loader arm lifting capacity to a maximum of 5,500 lbs. This package is available via Custom request only, and also requires an End User signed waiver acknowledging the reduced arm lifting capacity of these cylinders.		(Custom Required)

CNrG Tailgate Mounted CNG - Includes Installation Fee

☐	60 DGE CNG System		$40,425
☐	75 DGE CNG System		$42,110
☐	90 DGE CNG System		$47,865
☐	105 DGE CNG System		$54,670

FET Exempt CNrG Tailgate Mounted CNG For 20YD Bodies Only- Includes Installation Fee

☐	60 DGE CNG System		$42,925
☐	75 DGE CNG System		$44,610
☐	90 DGE CNG System		$50,365
☐	105 DGE CNG System		$57,170

CNrG Options

☐	Front Bumper Fill with Kill Cap		$1,250
☐	Defuel Transfer Hose - 35 ft.		$1,995

Effective December 1, 2017 Freedom Odyssey Commercial Sales Order Form

CNG Installation - Top of Body Installation			
☐	CNG Installation Charge - Includes brackets, temporary tank rental, hardware, and mounting of CNG system		$5,625
Extended Complete Body Warranty Options			
☐	Two (2) Year (Months 13-24) (Maximum 4,000 hrs. of Operation) Complete Heil Body Warranty Requires additional purchase of Infinity packer/eject cylinders from above		$4,400
☐	Three (3) Year (Months 13-36) (Maximum 6,000 hrs. of Operation) Complete Heil Body Warranty Requires additional purchase of Infinity packer/eject cylinders from above		$7,550
☐	Four (4) Year (Months 13-48) (Maximum 8,000 hrs. of Operation) Complete Heil Body Warranty Requires additional purchase of Infinity packer/eject cylinders from above		$10,635
☐	Five (5) Year (Months 13-60) (Maximum 10,000 hrs. of Operation) Complete Heil Body Warranty Requires additional purchase of Infinity packer/eject cylinders from above		$14,255
Extended Cylinder Warranty Options			
☐	Two (2) Year (Months 13-24) (Maximum 4,000 hrs. of Operation) All other Non-Infinity Cylinder Warranty - Requires additional purchase of Infinity packer/eject cylinders from above		$970
☐	Three (3) Year (Months 13-36) (Maximum 6,000 hrs. of Operation) All other Non-Infinity Cylinder Warranty - Requires additional purchase of Infinity packer/eject cylinders from above		$1,945
☐	Four (4) Year (Months 13-48) (Maximum 8,000 hrs. of Operation) All other Non-Infinity Cylinder Warranty - Requires additional purchase of Infinity packer/eject cylinders from above		$2,915
☐	Five (5) Year (Months 13-60) (Maximum 10,000 hrs. of Operation) All other Non-Infinity Cylinder Warranty - Requires additional purchase of Infinity packer/eject cylinders from above		$3,395
Paint Options			
NOTE: LIST PAINT CODES ON PAINT DIAGRAM			
☐	Customized Paint Color - Paint Color Code NOT included in the Color Smart Brochure		$390
☐	Two Tone Paint		$1,485
☐	Paint Striping - first stripe		$1,250
☐	Paint Striping - each additional stripe		$695
☐	Metallic Paint		$5,000
☐	Clear coat Finish		$1,735
☐	Anti-Graffiti Clear coat Finish		$2,500
☐	Prime Paint Only - deduct		($1,220)
TOTALS			
	Total from Options Above (MSRP)		**$0**
	Additional Options (SOARs, Chassis Mods, Etc.) Total		
	Subtotal		**$0**
	Dealer Discount (%)	**0%**	**$0**
	Dealer Net Price		**$0**
	Additional Discount (SPR)		
	Freight		
	Total Price per Unit		**$0**

FREEDOM ODYSSEY COMMERCIAL

Paint Stripe & Accessories Requirements

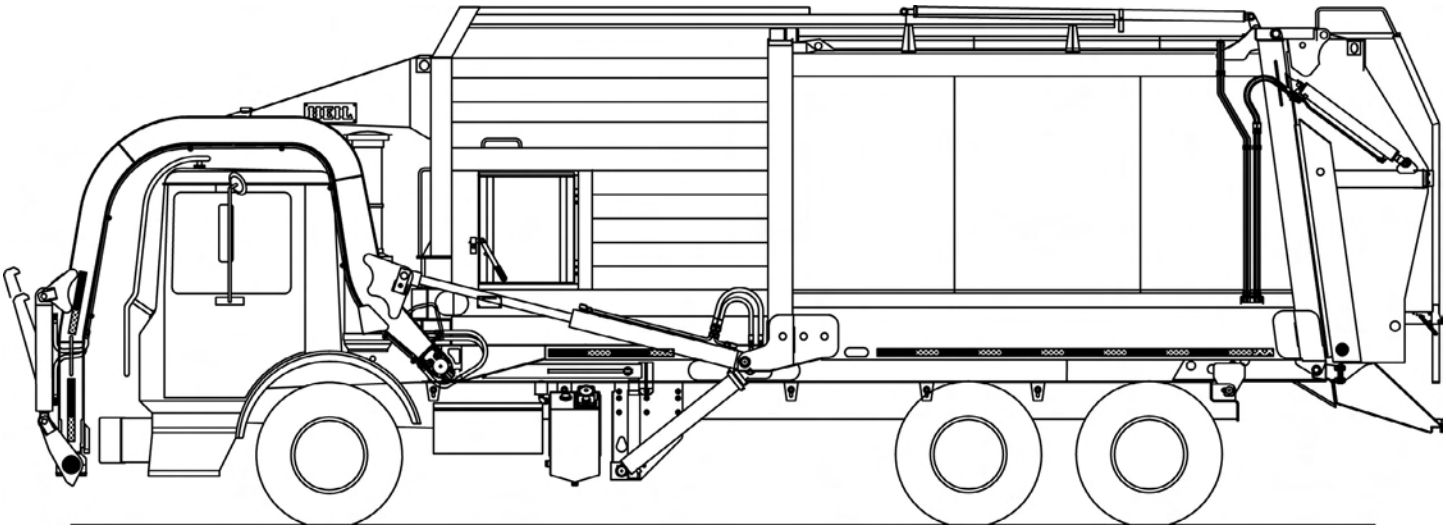

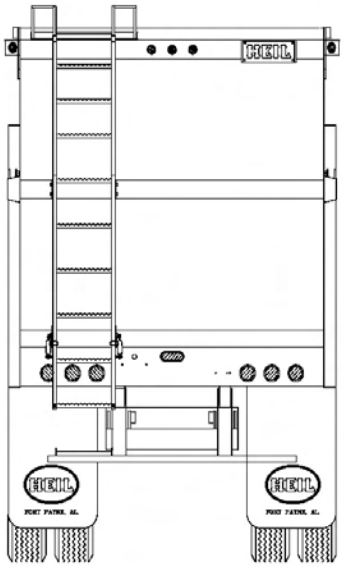

PAINT AND OPTIONS LAYOUT DETAIL
USE THIS FORM TO DESCRIBE PAINT SCHEMES
BE SPECIFIC ABOUT DIMENSIONS AND DETAILS

Sales Order #		Submitted by	
Customer			
Paint Color and Code 1			
Paint Color and Code 2			
Paint Color and Code 3			
Chassis Make			
Chassis Model			
Wheelbase			
Body Size		Approved by	

PT 1000™

High Performance Rear Loader

Standard Equipment Features included in Base Price

- 3.0 yd^3 hopper
- Smooth side body construction
- Bolt-on ANSI rear riding steps
- Tailgate service props
- Remote mount cast iron roller bearing gear pump (less PTO)
- Chrome-plated single stage cylinder rods
- Quick-change UHMW ejector slides
- Wide trak easy-change carrier slides
- Underbody mounted oil tank
- Level / temperature / sight gauge for hydraulic oil tank
- Oil suction shut-off valve
- 3-micron return line filter with magnetic trap and in-cab filter bypass monitor
- 100-micron suction line strainer
- Regenerative valve for fast packer and reload times
- Neutral safety switch for automatic transmissions only
- Right side buzzer controls
- Abrasion resistant hydrualic hoses with abrasion resistent covering
- Right side packer controls
- Backup alarm
- Backup and license plate light
- LED Center-mounted brake light
- LED Duplcate high and low mount stop, turn, and tail lights
- LED Mid-body turn signals
- Hinged left side body access door with step and grab
- LED FMVSS #108 clearance lights and reflectors
- ICC reflective tape
- Rear camera bracket and flood lights - reverse activated
- Body undercoating
- Customer's choice of one color finish paint from ColorSmart brochure
- Standard 1-year (2,000 hours of operation) warranty
- ANSI Z 245.1-2012 Compliant
- Cavity coat and joint sealer
- Chrome ejector cylinder
- 5 lb. In Cab Fire Extinguisher
- Safety Triangle

Effective December 1, 2017 PT 1000 Sales Order Form

Base Units PT 1000 - EJECT ONLY			
☐	13 cubic yard		$52,340
☐	16 cubic yard		$54,070
☐	18 cubic yard		$55,520
☐	20 cubic yard		$57,230
☐	25 cubic yard		$60,450
Hopper Size			3.0 yd³
CHASSIS MUST COMFORM WITH HEIL'S MOST CURRENT CHASSIS SPECIFICATIONS FOUND AT WWW.HEIL.COM			

* NOTE: Red numbers reference Option Photo Index

Mounting Options			
☐	Full Factory Mount		$2,245
☐	Semi-Mount - consists of frame cut-off, permanent mounting brackets and light electrical wiring only		$1,430
☐	Strap Mount - chassis must be suitable for temporary mount when received - Heil will connect lights and provide temporary mounting brackets		$820
☐	Mount at Dealer Destination		$735
Power Take Off / Pump Options			
☐	Remote Mount Gear Pump		STD
☐	Direct Mount Gear Pump - Requires Custom approval for the following applications, Mack Granite or and 3000 Series Allison Transmission Equipped Chassis'		$720
☐	Direct Mount Vane Pump		$1,200
☐	Front Mount Vane Pump Requires Custom Approval Due to Space Requirements		$4,415
☐	Operate at Idle (OAI) Front Mount Tandem Vane Pump		$5,975
☐	Hot Shift PTO with Over speed Protection		$2,950
☐	Cable Shift PTO - manual shift transmission only		$1,055
☐	Air Shift PTO - manual shift transmission only		$1,270
☐	890 Hot Shift PTO with Gear Pump		$3,735

Certain transmission / chassis configurations may not have proper clearance to allow direct mount or live power systems driven off of the transmission

Lighting and Electrical Accessories			
☐	Hopper Work Light Kit - switch on tailgate	L1	$350
☐	Hopper Work Light Kit - switch in cab	L1	$350
☐	Dual Hopper Work Light Kit - two lights - switch on tailgate	L9	$470
☐	Dual Hopper Work Light Kit - two lights - switch in cab	L9	$470
☐	Dual Work Lights Outside of Hopper		$470
☐	Body Side Backing Assist Lights - reverse activated	L3	$505
☐	Multi-Function (SMART) LED Strobe / Turn Lamps - includes LED light package for entire unit	L10	$610
☐	Municipal Lights with Dual 7" Amber LEDs	L2	$1,440
☐	Strobe Light, Amber - upper LH corner of tailgate - in-cab switch	L4	$670
☐	Dual Strobe Lights, Amber - upper LH & RH on tailgate - in-cab switch	L14	$970
☐	Strobe Light, Amber - mounted left- center, front of body - in-cab switch	L4	$670
☐	Dual Front LED Oval Strobe Lights, Amber - in-cab switch		$770
☐	Dual Rear LED Oval Strobe Lights, Amber - in-cab switch		$770
☐	Left Hand Buzzer Kit	CE1	$170
When equipped with dual cart tippers, only upper Peterson lamps will be provided			
Container Handling / Cart Tipper Options			
☐	12,000 Pound Line Pull Drum Winch with Control Kit - Not available on 13yd Unit	MG9	$5,835
☐	15,000 Pound Line Pull Reeving Cylinder with Control Kit - Not available on 13yd Unit	MG3	$6,480
☐	Adjustable Roll Bar with Control Kit	MG4	$4,120
All of the above mechanisms require the latch kit below			
☐	Lip and Latch Kit - to suit application without cart tipper(s)		$1,280
☐	Lip and Latch Kit - to suit application with cart tipper(s)		$1,640
	☐ Single Tipper Center Mounted ☐ Single Tipper Offset to Curbside ☐ al Tipper		
☐	Single Control Valve Section with Control Handle	MG2	$1,325
☐	Double Control Valve Section with Control Handles	MG2	$2,030
☐	Single Cart Tipper Control Valve, Handle, Plumbing and Hose Kit	MG2	$1,985
☐	Dual Cart Tipper Control Valve, Handle, Plumbing and Hose Kit	MG2	$3,225
☐	Bayne Cart Tipper - Specify Model - Includes Controls, Valves, Plumbing, and Installation		See Bayne
☐	Customer Installed Single Cart Tipper Kit - Bayne Bracket, Control Valve, Handle, Plumbing and Hose Kit	MG1	$2,325
☐	Customer Installed Double Cart Tipper Kit - Bayne Bracket, Control Valve, Handle, Plumbing and Hose Kit	MG1	$3,560
	Specify Brand and Model		
CUSTOMER SUPPLIED CART TIPPERS ARE NOT ADMISSIBLE			

Effective December 1, 2017 PT 1000 Sales Order Form

	Body Options		
☐	Hopper Floor Kit (1/4" - 150,000 psi in lieu of 3/16" 150,000 psi)		$910
☐	Hopper Floor Overlay Kit (3/16" - 150,000 psi)		$1,375
☐	Heavy Duty Hopper Overlay Package 3/16" Hopper Bottom and Side liners		$2,325
☐	Heavy Duty Tailgate Raise Cylinders (Maybe Required Depending Upon Tailgate Optional Content Ordered)		$1,325
☐	1/4" Body Floor Kit		$1,705
☐	Body Front Head Closure Kit	B22	$320
☐	Hydraulic Pressure Gauge Kit (shipped loose in cab)	B2	$305
☐	High Pressure Filter Kit	B3	$905
☐	60 Gallon Washout Tank - side mounted	B10	$2,025
☐	20 lb. Fire Extinguisher with Bracket	B4	$495
☐	Tool Box (18" x 18" x 36") - frame mounted	B5	$810
☐	Tool Box (18" x 18" x 24") - frame mounted	B5	$765
☐	Broom and Shovel Rack - mounted on tailgate	B15	$215
☐	Mud Flaps - anti-sail / anti-splash - mounted ahead of rear tires	B7	$225
☐	Mud Flaps - anti-sail / anti-splash - tailgate mounted behind rear tires	B7	$310
☐	Mud Guards - steel - mounted ahead of rear tires	B8	$330
☐	5 Gallon Cooler and Bracket - frame mounted	B12	$350
☐	Side Door Interlock Kit - shuts down pump when open (requires Hot Shift PTO or Front mount pump)		$520
☐	Return Line Check Valve Kit	B11	$505
☐	Spill Kit - In Cab		$340
☐	Spill Kit - Front of Body		$340
☐	Extended Tailgate Seal		$310
☐	Automatic Hydraulic Tailgate Locks		$3,820
☐	Anti-Back Pack Valve Kit		$950
☐	California Back Up Alarm		$670
☐	Hydraulic Oil Tank Quick Disconnect Kit - For use with filter buggy		$820
	Organics Package Options		
☐	Extended Tailgate Seal - Same as above		$310
☐	Side door kit with seal		$1,090
☐	Front head splash cover kit		$510
☐	Lip extension kit		$810
☐	Automatic Hydraulic Tailgate Locks - same as above		$3,820
☐	Front head oil tank kit (Not allowed with Front of Body CNG)		$1,510
☐	Hopper side drain kit		$320
☐	Tailgate side seal		$595
☐	Top of body seal		$265

Camera Systems

All camera systems are mounted with protective camera brackets and twin tailgate flood lights

CAMERA MONITOR LOCATION WILL BE CAB ROOF MOUNTED

Swivel monitor bracket will be provided for dual drive chassis

	360 ˚ Camera Systems and Options		
☐	360 Degree Camera Package - Includes 360 degree camera system (4 camera), DVR capability, Dash Camera, Operator Facing Camera, and Hopper Camera.		$9,340
☐	360 Base Camera System - Includes 360 (4 Camera System) for Monitoring Only		$8,440
☐	Add DVR for Recording Function - Includes Dash Camera for Road Facing View		$1,680
☐	Add Operator Facing Camera for Operator Monitoring		$385
☐	Add Hopper Camera		$1,035

Effective December 1, 2017 PT 1000 Sales Order Form

	3rd Eye Camera System		
☐	3rd Eye Single Camera with LCD Color Monitor		$1,580
☐	3rd Eye Double Camera with LCD Color Monitor		$2,030
☐	3rd Eye Triple Camera with LCD Color Monitor		$2,475
	Camera 1 Location - Mounted on Tailgate Facing Rear		
	Camera 2 Location - Choose: ☐ Left Hand Side Cab - ☐ Right Hand Side Cab		
	Camera 3 Location - Choose: ☐ Left Hand Side Cab - ☐ Right Hand Side Cab		
	Load Cell Scale Systems		
☐	Heil Optimum Payload System (HOPS) using Air-Weigh Axle Scales	CE20	$8,740
☐	Air-Weigh Axle Scale System without Interlock	CE20	$8,155
	Auxiliary Axle Options		
* NOTE: All axles MUST BE installed with tires so chassis can be re-certified to new GAWR and GVWR ratings			
☐	Watson & Chalin Rigid Axle: 20,000 pound capacity, hub piloted or 20" spoke wheel hubs, 30/30 brake chambers, automatic slack adjusters, 1,300 cubic inch air tank and regulator kit - for pusher applications		$10,835
	Auxiliary Axles Tire Options		
☐	255/70R-22.5 - load range H, 5,510 pound single max load at 120 psi with rim - 2 tires installed		$2,240
☐	275/70R-22.5 - load range H, 7,000 pound single max load at 120 psi with rim - 2 tires installed		$2,835
☐	11 R-22.5 - load range H, 6,610 pound single max load at 120 psi with rim - 2 tires installed		$2,390
* Note: All auxiliary applications must be approved by Heil prior to order acceptance			
	CNG Installation - Top of Body Installation		
☐	CNG Installation Charge - Includes brackets, hardware, and mounting of CNG system		$5,625
	Extended Complete Body Warranty Options		
☐	Two (2) Year (Months 13-24) (Maximum 4,000 hrs. of Operation) Complete Heil Body Warranty		$2,545
☐	Three (3) Year (Months 13-36) (Maximum 6,000 hrs. of Operation) Complete Heil Body Warranty		$5,090
☐	Four (4) Year (Months 13-48) (Maximum 8,000 hrs. of Operation) Complete Heil Body Warranty		$7,580
☐	Five (5) Year (Months 13-60) (Maximum 10,000 hrs. of Operation) Complete Heil Body Warranty		$10,090
	Extended Cylinder Warranty Options		
☐	Two (2) Year (Months 13-24) (Maximum 4,000 hrs. of Operation) All Cylinder Warranty -		$970
☐	Three (3) Year (Months 13-36) (Maximum 6,000 hrs. of Operation) All Cylinder Warranty -		$1,725
☐	Four (4) Year (Months 13-48) (Maximum 8,000 hrs. of Operation) All Cylinder Warranty -		$2,595
☐	Five (5) Year) (Months 13-60) (Maximum 10,000 hrs. of Operation) All Cylinder Warranty-		$3,330
	Paint Options		
NOTE: LIST PAINT CODES ON PAINT DIAGRAM			
☐	Customized Paint Color - Paint Color Code NOT included in the Color Smart Brochure		$390
☐	Two Tone Paint		$1,490
☐	Paint Striping - first stripe		$1,250
☐	Paint Striping - each additional stripe		$695
☐	Metallic Paint		$5,000
☐	Clear coat Finish		$1,735
☐	Anti-Graffiti Clear coat Finish		$2,495
☐	Prime Paint Only - deduct		($970)
	TOTALS		
	Total from Options Above (MSRP)		**$0**
	Additional Options (Custom's, Chassis Mods, Etc.) Total		
	Subtotal		**$0**
	Dealer Discount (%)	**0%**	**$0**
	Dealer Net Price		**$0**
	Additional Discount (SPR)		
	Freight		
	Total Price per Unit		**$0**

PT 1000™

Paint Stripe & Accessories Requirements

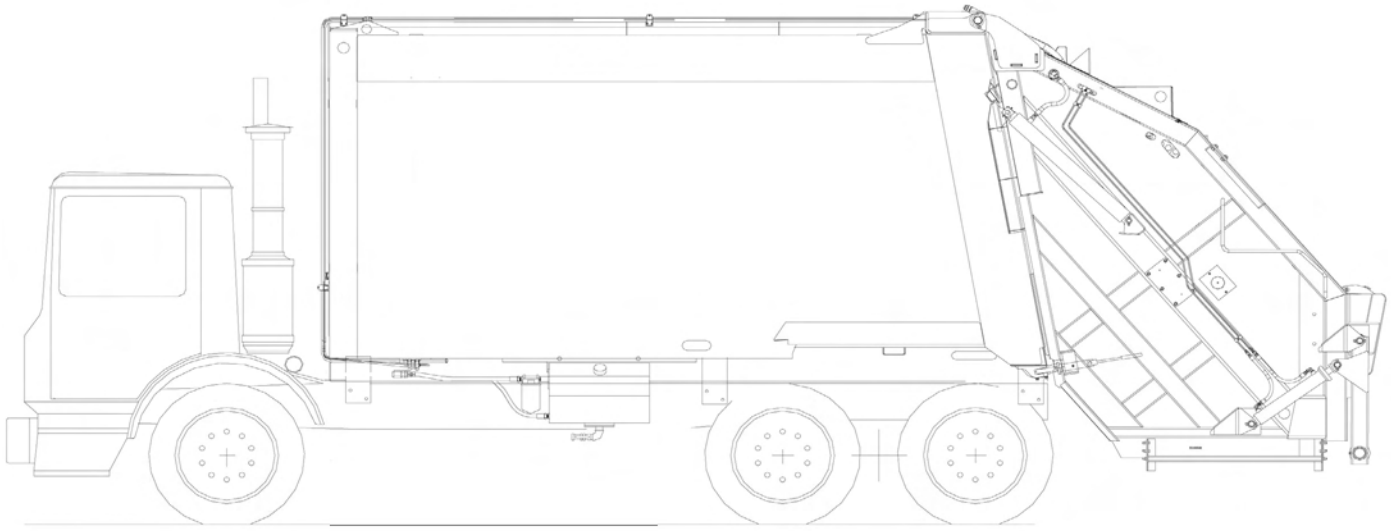

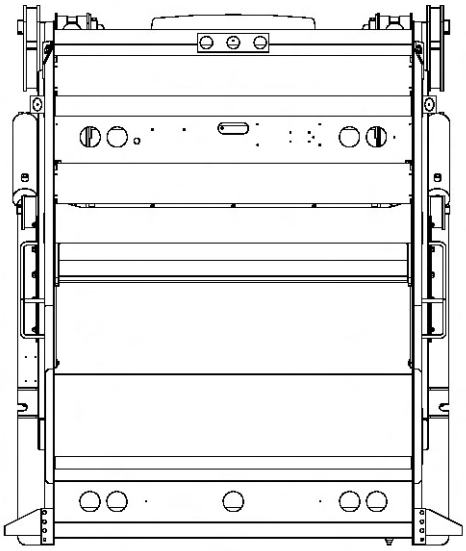

Paint and options layout detail
Use this form to describe paint schemes
Be specific about dimensions and details

Sales Order #		Submitted by	
Customer			
Paint Color 1			
Paint Color 2			
Paint Color 3			
Chassis Make			
Chassis Model			
Wheelbase			
Body Size		Approved by	

DuraPack® 5000

High Compaction Rear Loader

Standard Equipment Features included in Base Price

- 3.94 yd^3 hopper
- Smooth side body construction
- Extra-duty 80,000 psi body
- Bolt-on ANSI rear riding steps
- Tailgate service props
- Remote mount cast iron roller bearing gear pump (less PTO)
- Chrome-plated cylinder rods
- Chrome-plated ejector cylinder sleeves
- Underbody mounted oil tank
- Level/temperature/sight gauge for hydraulic oil tank
- Oil suction shut-off valve
- 3-micron return line filter w ith magenetic trap and in-cab filter bypass monitor
- 100-micron suction line strainer
- Regenerative valve for fast packer and reload times
- Neutral safety sw itch for automatic transmissions only
- Right side buzzer controls
- Abrasion resistant hydraulic hoses with abrasion resistant covering
- Right side packer controls
- Backup alarm
- Backup and license plate light
- LED Center-mounted brake light
- LED Duplicate high and low mount stop, turn, and tail lights
- LED Mid-body turn signals
- LED FMVSS #108 clearance lights and reflectors
- ICC reflective tape
- Rear camera bracket and flood lights - reverse activated
- Body undercoating
- Customer's choice of one color finish paint from ColorSmart brochure
- Standard 1-year (2,000 hours of operation) w arranty
- ANSI Z 245.1-2012 Compliant
- Cavity coat and joint sealer
- Safety Triangle
- 5 lb. In-Cab Fire Extinguisher
- Body side access door with step and grab

Effective December 1, 2017 DuraPack 5000 Sales Order Form

	Base Units DuraPack 5000 - EJECT ONLY		
	18 cubic yard - Custom and Weight Distribution Required Prior To Order		
	20 cubic yard - Custom and Weight Distribution Required Prior To Order		
☐	25 cubic yard		$68,310
☐	27 cubic yard		$69,890
☐	32 cubic yard		$72,860
Hopper Size			3.94 yd³
CHASSIS MUST COMFORM WITH HEIL'S MOST CURRENT CHASSIS SPECIFICATIONS FOUND AT WWW.HEIL.COM			
* NOTE: Red numbers reference Option Photo Index			
	Mounting Options		
☐	Full Factory Mount for Eject Models		$2,865
☐	Semi-Mount - consists of frame cut-off, permanent mounting brackets and light electrical wiring only		$1,430
☐	Strap Mount - chassis must be suitable for temporary mount when received - Heil will connect lights and provide temporary mounting brackets		$830
☐	Mount at Dealer Destination		$735
	Power Take Off / Pump Options		
☐	Remote Mount Gear Pump		STD
☐	Remote Mount Vane Pump - Fast Cycle*		$535
☐	Direct Mount Gear Pump - Requires Custom approval for the following applications, Mack Granite or any 3000 Series Allison Transmission Equipped Chassis'		$720
☐	Direct Mount Vane Pump		$1,200
☐	Front Mount Vane Pump		$4,415
☐	Front Mount Vane Pump - Fast Cycle*		$4,960
☐	Operate at Idle (OAI) Front Mount Vane Pump		$6,905
☐	Hot Shift PTO with Over speed Protection		$2,950
☐	Cable Shift PTO - manual shift transmission only		$1,055
☐	Air Shift PTO - manual shift transmission only		$1,270
☐	890 Hot Shift PTO with Gear Pump		$3,735
* Fast Cycle Pumps give 17-19 sec Cycle Times			
Certain transmission / chassis configurations may not have proper clearance to allow direct mount or live power systems driven off of the transmission			
	Lighting and Electrical Accessories		
☐	Hopper Work Light Kit - switch on tailgate	L1	$350
☐	Hopper Work Light Kit - switch in-cab	L1	$350
☐	Dual Hopper Work Light Kit - two lights - switch on tailgate	L9	$470
☐	Dual Hopper Work Light Kit - two lights - switch in cab	L9	$470
☐	Dual Work Lights Outside of Hopper		$470
☐	Body Side Backing Assist Lights - reverse activated	L3	$505
☐	LED Body Side Backing Assist Lights - reverse activated		$770
☐	Multi-Function (SMART) LED Strobe / Turn Lamps - includes LED light package for entire unit	L10	$610
☐	Strobe Light, Amber - upper LH corner of tailgate - in-cab switch	L4	$670
☐	Dual Strobe Lights, Amber - upper LH & RH on tailgate - in-cab switch	L14	$970
☐	Strobe Light, Amber - mounted right-center, front of body - in-cab switch	L4	$670
☐	Dual Front LED Oval Strobe Lights, Amber - in-cab switch		$770
☐	Dual Rear LED Oval Strobe Lights, Amber - in-cab switch		$770
☐	Dual Rear LED Oval Strobe Lights, Amber - pump activated		$770
☐	Strobe Light bracket on upper tailgate		$200
☐	Left Hand Buzzer Kit	CE1	$170

Effective December 1, 2017 DuraPack 5000 Sales Order Form

	Container Handling / Cart Tipper Options		
☐	12,000 Pound Line Pull Drum Winch with Control Kit	MG9	$5,835
☐	15,000 Pound Line Pull Reeving Cylinder with Control Kit	MG3	$6,480
☐	15,000 Pound Line Pull Recessed Reeving Cylinder with Control Kit	MG3	$8,115
☐	Recessed Reeving kits are not applicable on units less than 25 yard		
☐	Adjustable Roll Bar with Control Kit		$4,120
☐	Arm Mechanism with Control Kit	MG5	$5,840
☐	Bolt-on Reeving Cylinder Bracket Only	MG10	$535
All of the above mechanisms require the latch kit below, except for Arm Mechanism			
Riding steps cannot be supplied with Arm Mechanism option			
☐	Lip and Latch Kit - with short sill extension - to suit application without cart tipper(s) - Can't be used with Roll Bar	MG6.1	$1,280
☐	Lip and Latch Kit - with 20°, 7 inch sill extension with cutouts for cart tippers	MG6.3	$1,640
	☐ Single Tipper Center Mounted ☐ ingle Tipper Offset to Curbside ☐ l Tipper		
☐	Lip and Latch Kit - with 20°, 7 inch sill extension - to suit application without cart tipper(s) €	MG6.2	$1,640
€ Suitable for aftermarket install of cart tippers			
☐	Single Control Valve Section with Control Handle	MG2	$1,325
☐	Double Control Valve Section with Control Handles	MG2	$2,030
☐	Triple Control Valve Section with Control Handles	MG2	$3,225
☐	Single Cart Tipper Control Valve, Handle, Plumbing and Hose Kit	MG2	$1,985
☐	Dual Cart Tipper Control Valve, Handle, Plumbing and Hose Kit	MG2	$3,225
☐	Bayne Cart Tipper - Specify Model - Includes Controls, Valves, Plumbing, and Installation		See Bayne
☐	Customer Installed Single Cart Tipper Kit - Bayne Bracket, Control Valve, Handle, Plumbing and Hose Kit	MG1	$2,325
☐	Customer Installed Double Cart Tipper Kit - Bayne Bracket, Control Valve, Handle, Plumbing and Hose Kit	MG1	$3,560
	Specify Brand and Model		
CUSTOMER SUPPLIED CART TIPPERS ARE NOT ADMISSIBLE			

	Body Options		
☐	Hopper Floor Kit (1/4" - 150,000 psi in lieu of standard 3/16" 150,000 psi)		$910
☐	Hopper Floor Overlay Kit (3/16" - 150,000 psi)		$1,375
☐	DP 5000 H.D. Contractors Package (includes 1/4" hopper floor, 3/16" hopper front face liner and tailgate spill troughs)		$1,510
☐	4" Hopper Lip Extension - for hand loading only	B23	$870
☐	Hopper Lip Reinforcement Kit		$505
☐	Tailgate Side Spill Troughs	B13	$715
☐	Automatic Hydraulic Tailgate Locks	B46	$3,820
☐	Extended Tailgate Seal Kit		$310
☐	Body Front Head Closure Kit	B22	$765
☐	Body Front Head Splash Guard (Extends the front head an extra 11.5")		$330
☐	Side Door Interlock Kit - shuts down pump when open (requires Hot Shift PTO or Front mount pump)		$520
☐	Hydraulic Pressure Gauge Kit (shipped loose in cab)	B2	$305
☐	High Pressure Filter Kit	B3	$905
☐	Hydraulic Oil Tank Heater - 500 watt		$1,185
☐	Hydraulic Tank Low Oil Level Warning Kit		$1,080
☐	In-Body Oil Tank	B14	$1,230
☐	60 Gallon Wash-Out Tank	B10	$2,025
☐	20 lb. Fire Extinguisher with Bracket	B4	$495
☐	Dual 20 lb. Fire Extinguisher with Bracket		$995
☐	Tool Box (18" x 18" x 36") - frame mounted	B5	$810
☐	Tool Box (18" x 18" x 24") - frame mounted	B5	$765
☐	Broom and Shovel Rack - mounted on tailgate	B15	$215
☐	Dual Broom and Shovel Rack - mounted on both sides of tailgate	B15	$420
☐	Mud Flaps - anti-sail / anti-splash - mounted ahead of rear tires	B7	$225
☐	Mud Flaps - anti-sail / anti-splash - tailgate mounted behind rear tires	B7	$310
☐	Mud Guards - steel - mounted ahead of rear tires	B8	$330
☐	5 Gallon Cooler and Bracket - frame mounted	B12	$350
☐	Return Line Check Valve Kit	B11	$505
☐	Upper Panel Cover Kit		$425
☐	1/4" Body Floor Kit		$2,400
☐	Roof Tube Cover Kit		$1,040
☐	Fender Extension Kit		$725
☐	Roadway Sign Frames		$2,020
☐	Spill Kit - In Cab		$340
☐	Spill Kit - Front of Body		$340
☐	Hydraulic Oil Tank Quick Disconnect Kit - For use with filter buggy		$820
☐	Anti-Back Pack Valve Kit		$950

Effective December 1, 2017 DuraPack 5000 Sales Order Form

Camera Systems			
All camera systems are mounted with protective camera brackets and twin tailgate flood lights			
CAMERA MONITOR LOCATION WILL BE CAB ROOF MOUNTED			
Swivel monitor bracket will be provided for dual drive chassis			
360 ˚ Camera Systems and Options			
☐	360 Degree Camera Package - Includes 360 degree camera system (4 camera), DVR capability, Dash Camera, Operator Facing Camera, and Hopper Camera.		$9,340
☐	360 Base Camera System - Includes 360 (4 Camera System) for Monitoring Only		$8,440
☐	Add DVR for Recording Function - Includes Dash Camera for Road Facing View		$1,680
☐	Add Operator Facing Camera for Operator Monitoring		$385
☐	Add Hopper Camera		$1,035
3rd Eye Camera Systems			
☐	3rd Eye Single Camera with LCD Color Monitor		$1,580
☐	3rd Eye Double Camera with LCD Color Monitor		$2,030
☐	3rd Eye Triple Camera with LCD Color Monitor		$2,475
	Camera 1 Location - Mounted on Tailgate Facing Rear		
	Camera 2 Location - Choose: ☐ Left Hand Side Cab - ☐ Right Hand Side Cab		
	Camera 3 Location - Choose: ☐ Left Hand Side Cab - ☐ Right Hand Side Cab		
Load Cell Scale Systems			
☐	Heil Optimum Payload System (HOPS) using Air-Weigh Axle Scales	CE20	$8,740
☐	Air-Weigh Axle Scale System without Interlock	CE20	$8,155
Auxiliary Axles Options			
☐	Watson & Chalin Rigid Axle: 20,000 pound capacity, hub piloted or 20" spoke wheel hubs, 30/30 brake chambers, automatic slack adjusters, 1,300 cubic inch air tank and regulator kit - for pusher applications		$10,835
Auxiliary Axle Tire Options			
☐	255/70R-22.5 - load range H, 5,510 pound single max load at 120 psi with rim - 2 tires installed		$2,240
☐	275/70R-22.5 - load range H, 7,000 pound single max load at 120 psi with rim - 2 tires installed		$2,835
☐	11 R-22.5 - load range H, 6,610 pound single max load at 120 psi with rim - 2 tires installed		$2,390
* Note: All auxiliary applications must be approved by Heil prior to order acceptance			
CNG Installation - Top of Body Installation			
☐	CNG Installation Charge - Includes brackets, hardware, and mounting of CNG system		$5,625
Extended Complete Body Warranty Options			
☐	Two (2) Year (Months 13-24) (Maximum 4,000 hrs. of Operation) Complete Heil Body Warranty		$2,545
☐	Three (3) Year (Months 13-36) (Maximum 6,000 hrs. of Operation) Complete Heil Body Warranty		$5,090
☐	Four (4) Year (Months 13-48) (Maximum 8,000 hrs. of Operation) Complete Heil Body Warranty		$7,580
☐	Five (5) Year (Months 13-60) (Maximum 10,000 hrs. of Operation) Complete Heil Body Warranty		$10,090
Extended Cylinder Warranty Options			
☐	Two (2) Year (Months 13-24) (Maximum 4,000 hrs. of Operation) All Cylinder Warranty -		$970
☐	Three (3) Year (Months 13-36) (Maximum 6,000 hrs. of Operation) All Cylinder Warranty -		$1,725
☐	Four (4) Year (Months 13-48) (Maximum 8,000 hrs. of Operation) All Cylinder Warranty -		$2,595
☐	Five (5) Year) (Months 13-60) (Maximum 10,000 hrs. of Operation) All Cylinder Warranty-		$3,330
Paint Options			
NOTE: LIST PAINT CODES ON PAINT DIAGRAM			
☐	Customized Paint Color - Paint Color Code NOT included in the Color Smart Brochure		$390
☐	Two Tone Paint		$1,490
☐	Paint Striping - first stripe		$1,250
☐	Paint Striping - each additional stripe		$695
☐	Metallic Paint		$5,000
☐	Clear coat Finish		$1,735
☐	Anti-Graffiti Clear coat Finish		$2,495
☐	Prime Paint Only - deduct		($970)
TOTALS			
	Total from Options Above (MSRP)		**$0**
	Additional Options (Custom's, Chassis Mods, Etc.) Total		
	Subtotal		**$0**
	Dealer Discount (%)	**0%**	**$0**
	Dealer Net Price		**$0**
	Additional Discount (SPR)		
	Freight		
	Total Price per Unit		**$0**

DURAPACK® 5000

Paint Stripe & Accessories Requirements

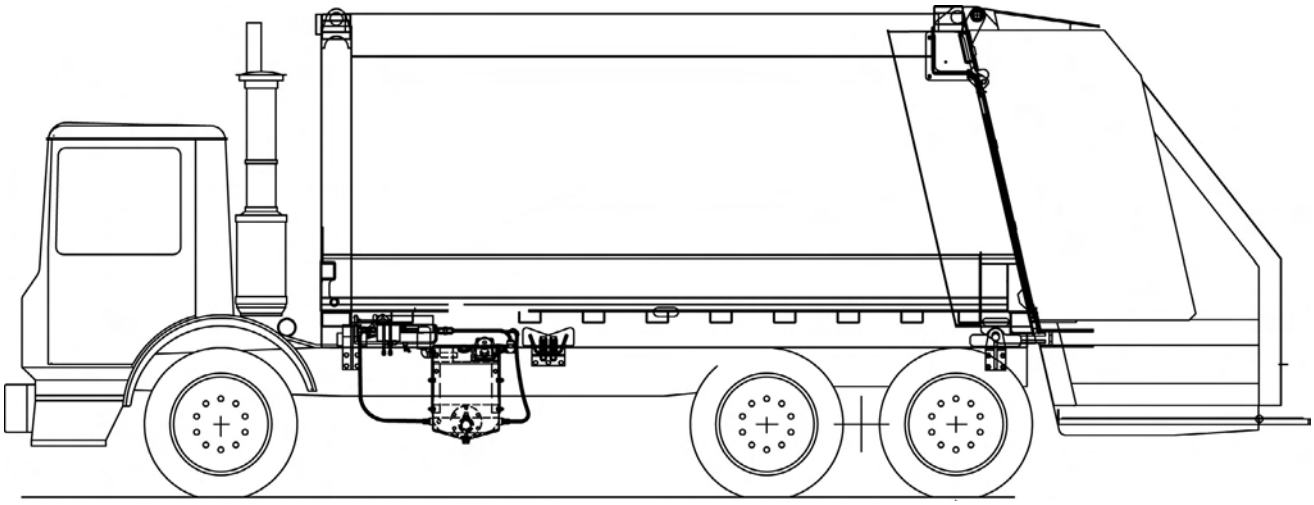

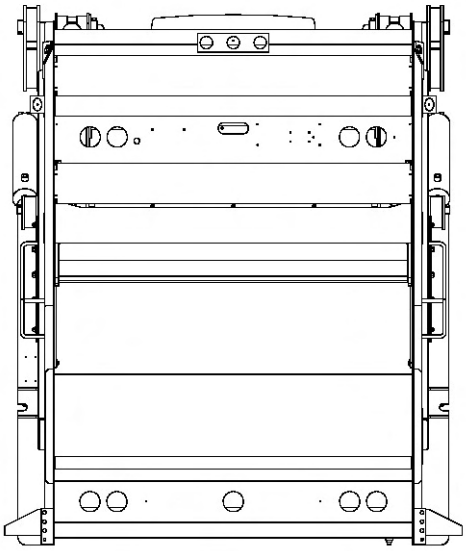

PAINT AND OPTIONS LAYOUT DETAIL
USE THIS FORM TO DESCRIBE PAINT SCHEMES
BE SPECIFIC ABOUT DIMENSIONS AND DETAILS

Sales Order #		Submitted by	
Customer			
Paint Color 1			
Paint Color 2			
Paint Color 3			
Chassis Make			
Chassis Model			
Wheelbase			
Body Size		Approved by	

PowerTrack® Commercial

High Compaction Rear Loader

Standard Equipment Features included in Base Price

• 3.94 yd^3 hopper	• Right side packer controls
• Smooth side body construction	• Backup alarm
• Extra-duty 80,000 psi body	• Backup and license plate light
• Bolt-on ANSI rear riding steps	• LED Center-mounted brake light
• Tailgate service props	• LED Duplicate high and low mount stop, turn, and tail lights
• Remote mount cast iron roller bearing gear pump (less PTO)	• LED Mid-body turn signals
• Chrome-plated cylinder rods	• LED FMVSS #108 clearance lights and reflectors
• Chrome-plated ejector cylinder sleeves	• ICC reflective tape
• Underbody mounted oil tank	• Rear camera bracket and flood lights - reverse activated
• Level/temperature/sight gauge for hydraulic oil tank	• Body undercoating
• Oil suction shut-off valve	• Customer's choice of one color finish paint from ColorSmart brochure
• 3-micron return line filter with magenetic trap and in-cab filter bypass monitor	• Standard 1-year (2,000 hours of operation) warranty
• 100-micron suction line strainer	• ANSI Z 245.1-2012 Compliant
• Regenerative valve for fast packer and reload times	• Cavity coat and joint sealer
• Neutral safety switch for automatic transmissions only	• Safety Triangle
• Right side buzzer controls	• 5 lb. In-Cab Fire Extinguisher
• Body side access door with step and grab	• Abrasion resistant hydraulic hoses with abrasion resistant covering

Effective December, 1,2017 PowerTrak Commercial Sales Order Form

Base Units PowerTrak Commercial - EJECT ONLY			
☐	25 cubic yard		$75,015
☐	27 cubic yard		$76,575
☐	32 cubic yard		$79,460
Hopper Size			3.64 yd³
CHASSIS MUST COMFORM WITH HEIL'S MOST CURRENT CHASSIS SPECIFICATIONS AT WWW.HEIL.COM			
* NOTE: Red numbers reference Option Photo Index			
Mounting Options			
☐	Full Factory Mount for Eject Models		$2,865
☐	Semi-Mount - consists of frame cut-off, permanent mounting brackets and light electrical wiring only		$1,430
☐	Strap Mount - chassis must be suitable for temporary mount when received - Heil will connect lights and provide temporary mounting brackets		$820
☐	Mount at Dealer Destination		$735
Power Take Off / Pump Options			
☐	Remote Mount Gear Pump		STD
☐	Direct Mount Gear Pump - Requires Custom approval for the following applications, Mack Granite or any 3000 Series Allison Transmission Equipped Chassis'		$720
☐	Direct Mount Vane Pump		$1,200
☐	Front Mount Vane Pump		$4,415
☐	Operate at Idle (OAI) Remote Mount Vane Pump with Transmission Driven, Constant Duty PTO		$8,170
☐	Operate at Idle (OAI) Front Mount Tandem Vane Pump		$6,905
☐	Hot Shift PTO with Over speed Protection		$2,950
☐	Cable Shift PTO - manual shift transmission only		$1,055
☐	Air Shift PTO - manual shift transmission only		$1,270
☐	890 Hot Shift PTO with Gear Pump		$3,735
Certain transmission / chassis configurations may not have proper clearance to allow direct mount or live power systems driven off of the transmission			
Lighting and Electrical Accessories			
☐	Hopper Work Light Kit - switch on tailgate	L1	$350
☐	Hopper Work Light Kit - switch in cab	L1	$350
☐	Dual Hopper Work Light Kit - two lights - switch on tailgate	L9	$470
☐	Dual Hopper Work Light Kit - two lights - switch in cab	L9	$470
☐	Dual Work Lights Outside of Hopper		$470
☐	Body Side Backing Assist Lights - reverse activated	L3	$505
☐	LED Body Side Backing Assist Lights - reverse activated		$770
☐	Multi-Function (SMART) LED Strobe / Turn Lamps - includes LED light package for entire unit	L10	$610
☐	Municipal Lights with Dual 7" Amber LEDs & Overhead Flood Light	L2	$1,440
☐	Strobe Light, Amber - upper LH corner of tailgate - in-cab switch	L4	$670
☐	Dual Strobe Lights, Amber - upper LH & RH on tailgate - in-cab switch	L14	$970
☐	Strobe Light, Amber - mounted right-center, front of body - in-cab switch	L4	$670
☐	Dual Front LED Oval Strobe Lights, Amber - in-cab switch		$770
☐	Dual Rear LED Oval Strobe Lights, Amber - in-cab switch		$770
☐	Dual Rear LED Oval Strobe Lights, Amber - pump activated		$770
☐	Strobe Light bracket on upper tailgate		$200
☐	Left Hand Buzzer Kit	CE1	$170
Container Handling / Cart Tipper Options			
☐	12,000 Pound Line Pull Drum Winch with Control Kit	MG9	$5,835
☐	15,000 Pound Line Pull Reeving Cylinder with Control Kit	MG3	$6,487
☐	15,000 Pound Line Pull Recessed Reeving Cylinder with Control Kit	MG3	$8,115
	Recessed Reeving kits are not applicable on units less than 25 yard without custom approval		
☐	Roll Bar Adjustable with Control Kit	MG7	$4,120
☐	Lip and Latch Kit - to suit application without cart tipper(s)		$1,535
☐	Lip and Latch Kit - to suit application with cart tipper(s)		$1,640
	☐ Single Tipper Center Mounted ☐ Single Tipper Offset to Curbside D☐ Tippers		
☐	Single Control Valve Section with Control Handle	MG2	$1,325
☐	Double Control Valve Section with Control Handles	MG2	$2,030
☐	Single Cart Tipper Control Valve, Handle, Plumbing and Hose Kit	MG2	$1,985
☐	Dual Cart Tipper Control Valve, Handle, Plumbing and Hose Kit	MG2	$3,225
☐	Bayne Cart Tipper - Specify Model - Includes Controls, Valves, Plumbing, and Installation		See Bayne
☐	Customer Installed Single Cart Tipper Kit - Bayne Bracket, Control Valve, Handle, Plumbing and Hose Kit	MG1	$2,325
☐	Customer Installed Double Cart Tipper Kit - Bayne Bracket, Control Valve, Handle, Plumbing and Hose Kit	MG1	$3,560
	Specify Brand and Model		
CUSTOMER SUPPLIED CART TIPPERS ARE NOT ADMISSIBLE			

Effective December 1, 2017 PowerTrak Commercial Sales Order Form

	Body Options		
☐	Hopper Floor Overlay Kit (3/16" - 150,000 psi)		$1,375
☐	PowerTrak Comm. H.D. Contractors Package (incl. 3/16" hopper floor overlay liner and 10 ga. hopper wall overlay liners @ 400 BHN - 145,000 psi)		$2,185
☐	Body Front Head Closure Kit	B22	$765
☐	Body Front Head Spash Guard (Extends the front head an extra 11.5")		$330
☐	Side Door Interlock Kit - shuts down pump when open (requires Hot Shift PTO or Front mount pump)		$520
☐	Shur-Lock™ Hydraulic Tailgate Locks		$4,090
☐	Hydraulic Pressure Gauge Kit (shipped loose in cab)	B3	$305
☐	High Pressure Filter Kit		$905
☐	Hydraulic Oil Tank Heater - 500 watt		$1,185
☐	Hydraulic Tank Low Oil Level Warning Kit		$1,080
☐	In-Body Oil Tank	B14	$1,230
☐	60 Gallon Washout Tank	B10	$2,025
☐	20 lb. Fire Extinguisher with Bracket	B4	$495
☐	Dual 20 lb. Fire Extinguisher with Bracket		$995
☐	Tool Box (18" x 18" x 36") - frame mounted	B5	$810
☐	Tool Box (18" x 18" x 24") - frame mounted	B5	$765
☐	Broom and Shovel Rack - mounted on tailgate	B16	$215
☐	Mud Flaps - anti-sail / anti-splash - mounted ahead of rear tires	B7	$225
☐	Mud Flaps - anti-sail / anti-splash - tailgate mounted behind rear tires	B7	$310
☐	Mud Guards - steel - mounted ahead of rear tires	B8	$330
☐	5 Gallon Cooler and Bracket - frame mounted	B12	$350
☐	Return Line Check Valve Kit	B11	$505
☐	1/4" Body Floor Kit		$2,400
☐	Roof Tube Cover Kit		$1,040
☐	Fender Extension Kit		$725
☐	Roadway Sign Frames		$2,020
☐	Spill Kit - In Cab		$340
☐	Spill Kit - Front of Body		$340
☐	Hydraulic Oil Tank Quick Disconnect Kit - For use with filter buggy		$820
☐	Anti-Back Pack Valve Kit		$950

Camera Systems

All camera systems are mounted with protective camera brackets and twin tailgate flood lights

CAMERA MONITOR LOCATION WILL BE CAB ROOF MOUNTED

Swivel monitor bracket will be provided for dual drive chassis

	360 ˚ Camera Systems and Options		
☐	360 Degree Camera Package - Includes 360 degree camera system (4 camera), DVR capability, Dash Camera, Operator Facing Camera, and Hopper Camera.		$9,340
☐	360 Base Camera System - Includes 360 (4 Camera System) for Monitoring Only		$8,440
☐	Add DVR for Recording Function - Includes Dash Camera for Road Facing View		$1,680
☐	Add Operator Facing Camera for Operator Monitoring		$385
☐	Add Hopper Camera		$1,035
	3rd Eye Camera Systems		
☐	3rd Eye Single Camera with LCD Color Monitor		$1,580
☐	3rd Eye Double Camera with LCD Color Monitor		$2,030
☐	3rd Eye Triple Camera with LCD Color Monitor		$2,475
	Camera 1 Location - Mounted on Tailgate Facing Rear		
	Camera 2 Location - Choose: ☐ Left Hand Side Cab - ☐ Right Hand Side Cab		
	Camera 3 Location - Choose: ☐ Left Hand Side Cab - ☐ Right Hand Side Cab		
	All camera monitors on dual drive chassis will receive a monitor swivel bracket as standard		
	Load Cell Scale Systems		
☐	Heil Optimum Payload System (HOPS) using Air-Weigh Axle Scales	CE20	$8,740
☐	Air-Weigh Axle Scale System without Interlock	CE20	$8,155
	Auxiliary Axle Options		
	* NOTE: All axles MUST BE installed with tires so chassis can be re-certified to new GAWR and GVWR ratings		
☐	Watson & Chalin Rigid Axle: 20,000 pound capacity, hub piloted or 20" spoke wheel hubs, 30/30 brake chambers, automatic slack adjusters, 1,300 cubic inch air tank and regulator kit - for pusher applications		$10,835
	Auxiliary Axle Tire Options		
☐	255/70R-22.5 - load range H, 5,510 pound single max load at 120 psi with rim - 2 tires installed		$2,240
☐	275/70R-22.5 - load range H, 7,000 pound single max load at 120 psi with rim - 2 tires installed		$2,835
☐	11 R-22.5 - load range H, 6,610 pound single max load at 120 psi with rim - 2 tires installed		$2,390

* Note: All auxiliary applications must be approved by Heil prior to order acceptance

Effective December 1, 2017 PowerTrak Commercial Sales Order Form

CNG Installation - Top of Body Installation			
☐	CNG Installation Charge - Includes brackets, hardware, and mounting of CNG system		$5,625
Extended Complete Body Warranty Options			
☐	Two (2) Year (Months 13-24) (Maximum 4,000 hrs. of Operation) Complete Heil Body Warranty		$3,340
☐	Three (3) Year (Months 13-36) (Maximum 6,000 hrs. of Operation) Complete Heil Body Warranty		$6,745
☐	Four (4) Year (Months 13-48) (Maximum 8,000 hrs. of Operation) Complete Heil Body Warranty		$10,090
☐	Five (5) Year (Months 13-60) (Maximum 10,000 hrs. of Operation) Complete Heil Body Warranty		$13,430
Extended Cylinder Warranty Options			
☐	Two (2) Year (Months 13-24) (Maximum 4,000 hrs. of Operation) All Cylinder Warranty -		$1,130
☐	Three (3) Year (Months 13-36) (Maximum 6,000 hrs. of Operation) All Cylinder Warranty -		$2,335
☐	Four (4) Year (Months 13-48) (Maximum 8,000 hrs. of Operation) All Cylinder Warranty -		$3,475
☐	Five (5) Year) (Months 13-60) (Maximum 10,000 hrs. of Operation) All Cylinder Warranty-		$4,465
Paint Options			
NOTE: LIST PAINT CODES ON PAINT DIAGRAM			
☐	Customized Paint Color - Paint Color Code NOT included in the Color Smart Brochure		$390
☐	Two Tone Paint		$1,490
☐	Paint Striping - first stripe		$1,250
☐	Paint Striping - each additional stripe		$695
☐	Metallic Paint		$5,000
☐	Clear coat Finish		$1,735
☐	Anti-Graffiti Clear coat Finish		$2,495
☐	Prime Paint Only - deduct		($970)
TOTALS			
	Total from Options Above (MSRP)		**$0**
	Additional Options (Custom's, Chassis Mods, Etc.) Total		
	Subtotal		**$0**
	Dealer Discount (%)	**0%**	**$0**
	Dealer Net Price		**$0**
	Additional Discount (SPR)		
	Freight		
	Total Price per Unit		**$0**

POWERTRAK® COMMERCIAL

Paint Stripe & Accessories Requirements

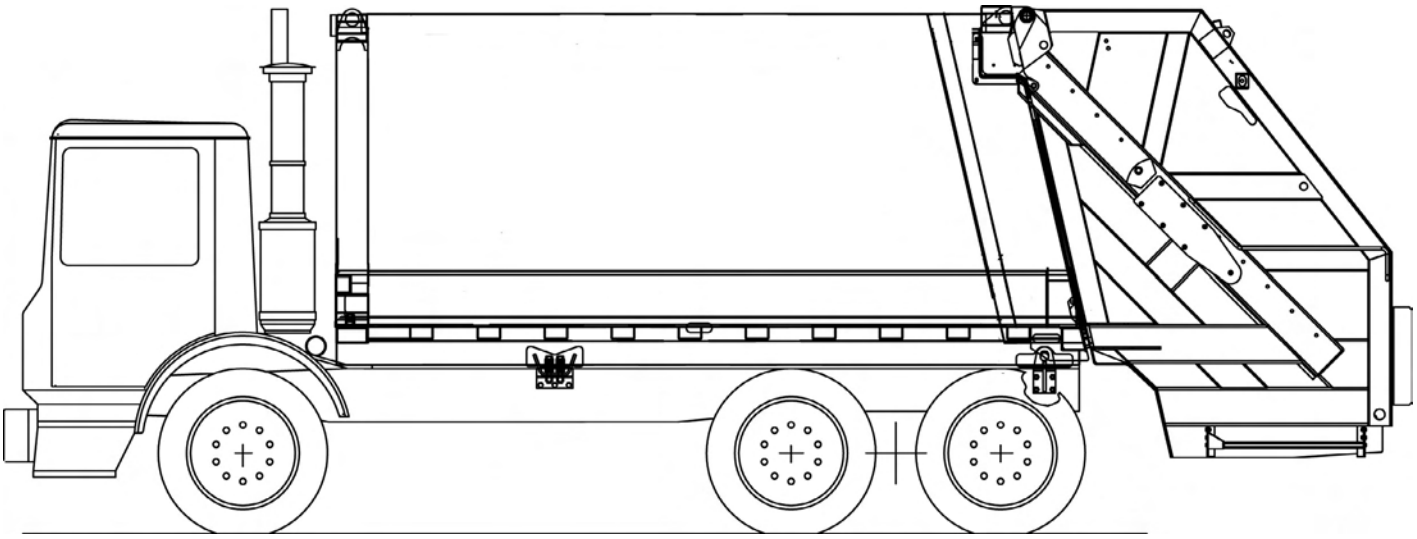

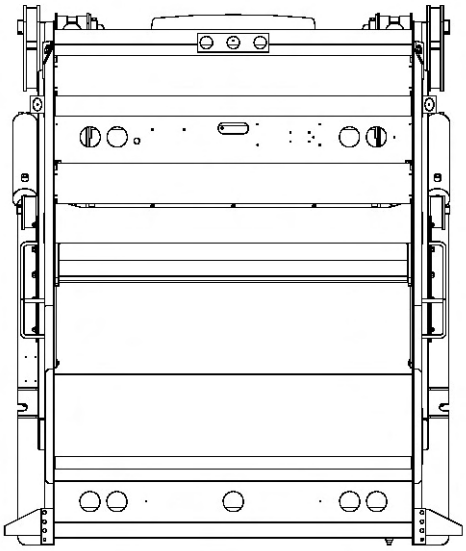

PAINT AND OPTIONS LAYOUT DETAIL
USE THIS FORM TO DESCRIBE PAINT SCHEMES
BE SPECIFIC ABOUT DIMENSIONS AND DETAILS

Sales Order #		Submitted by	
Customer			
Paint Color 1			
Paint Color 2			
Paint Color 3			
Chassis Make			
Chassis Model			
Wheelbase			
Body Size		Approved by	

PowerTrak® Commercial Plus

High-Compaction Tag Axle Rear Loader

Standard Equipment Features included in Base Price

- 3.94 yd^3 hopper
- Non-steer 14,000 pound capacity Tag Axle - tires not included
- Smooth side body construction
- Extra-duty 80,000 psi body
- Bolt-on ANSI rear riding steps
- Tailgate service props
- Remote mount cast iron roller bearing gear pump (less PTO)
- Chrome-plated cylinder rods
- Chrome-plated ejector cylinder sleeves
- Underbody mounted oil tank
- Level/temperature/sight gauge for hydraulic oil tank
- Oil suction shut-off valve
- 3-micron return line filter with magenetic trap and in-cab filter bypass monitor
- 100-micron suction line strainer
- Regenerative valve for fast packer and reload times
- Neutral safety switch for automatic transmissions only
- Body side access door with step and grab
- Abrasion resistant hydraulic hoses with abrasion resistant covering
- Right side buzzer controls
- Right side packer controls
- Backup alarm
- Backup and license plate light
- LED Center-mounted brake light
- LED Duplicate high and low mount stop, turn, and tail lights
- LED Mid-body turn signals
- LED FMVSS #108 clearance lights and reflectors
- ICC reflective tape
- Rear camera bracket and flood lights - reverse activated
- Body undercoating
- Customer's choice of one color finish paint from ColorSmart brochure
- Standard 1-year (2,000 hours of operation) warranty
- ANSI Z 245.1-2012 Compliant
- Cavity coat and joint sealer
- Safety Triangle
- 5 lb. In-Cab Fire Extinguisher

Effective December 1, 2017 PowerTrak Commercial Plus Sales Order Form

Base Units PowerTrak Commercial Plus - EJECT ONLY			
☐	25 cubic yard - Includes Silent Drive Tag Axle*		$90,835
☐	27 cubic yard - Includes Silent Drive Tag Axle*		$92,395
☐	32 cubic yard - Includes Silent Drive Tag Axle*		$93,955
Hopper Size			3.64 yd^3
*Tag Axle does not include Tires			

CHASSIS MUST COMFORM WITH HEIL'S MOST CURRENT CHASSIS SPECIFICATIONS AT WWW.HEIL.COM

* NOTE: Red numbers reference Option Photo Index

Mounting Options			
☐	Full Factory Mount for Eject Models		$2,925
☐	Semi-Mount - consists of frame cut-off, permanent mounting brackets and light electrical wiring only		$1,460
☐	Strap Mount - chassis must be suitable for temporary mount when received - Heil will connect lights and provide temporary mounting brackets		$840
☐	Mount at Dealer Destination		$750
Power Take Off / Pump Options			
☐	Remote Mount Gear Pump		STD
☐	Direct Mount Gear Pump - Requires Custom approval for the following applications, Mack Granite or 3000 Series Allison Transmission Equipped Chassis'		$720
☐	Direct Mount Vane Pump		$1,200
☐	Front Mount Vane Pump		$4,415
☐	Operate at Idle (OAI) Front Mount Tandem Vane Pump		$6,905
☐	Hot Shift PTO with Over speed Protection		$2,950
☐	Cable Shift PTO - manual shift transmission only		$1,055
☐	Air Shift PTO - manual shift transmission only		$1,270
☐	890 Hot Shift PTO with Gear Pump		$3,735

Certain transmission / chassis configurations may not have proper clearance to allow direct mount or live power systems driven off of the transmission

Lighting and Electrical Accessories			
☐	Hopper Work Light Kit - switch on tailgate	L1	$350
☐	Hopper Work Light Kit - switch in cab	L1	$350
☐	Dual Hopper Work Light Kit - two lights - switch on tailgate	L9	$470
☐	Dual Hopper Work Light Kit - two lights - switch in cab	L9	$470
☐	Dual Work Lights Outside of Hopper		$470
☐	Body Side Backing Assist Lights - reverse activated	L3	$505
☐	LED Body Side Backing Assist Lights - reverse activated		$770
☐	Multi-Function (SMART) LED Strobe / Turn Lamps - includes LED light package for entire unit	L10	$610
☐	Municipal Lights with Dual 7" Amber LEDs & Overhead Flood Light	L2	$1,440
☐	Strobe Light, Amber - upper LH corner of tailgate - in-cab switch	L4	$670
☐	Dual Strobe Lights, Amber - upper LH & RH on tailgate - in-cab switch	L14	$970
☐	Strobe Light, Amber - mounted right-center, front of body - in-cab switch	L4	$670
☐	Dual Front LED Oval Strobe Lights, Amber - in-cab switch		$770
☐	Dual Rear LED Oval Strobe Lights, Amber - in-cab switch		$770
☐	Dual Rear LED Oval Strobe Lights, Amber - pump activated		$770
☐	Strobe Light bracket on upper tailgate		$200
☐	Left Hand Buzzer Kit	CE1	$170
Container Handling / Cart Tipper Options			
☐	12,000 Pound Line Pull Drum Winch with Control Kit	MG9	$5,835
☐	15,000 Pound Line Pull Reeving Cylinder with Control Kit	MG3	$6,480
☐	15,000 Pound Line Pull Recessed Reeving Cylinder with Control Kit	MG3	$8,115
	Recessed Reeving kits are not applicable on units less than 25 yard		
☐	Standard Roll Bar with Control Kit - Latch Pivot	MG7	$4,120
☐	Roll Bar with Control Kit - Mid-Latch Pivot		$4,120
☐	Roll Bar with Control Kit - Bolster Pivot	MG8	$4,120
All of the above mechanisms require the latch kit below, except for Arm Mechanism			
☐	Lip and Latch Kit - to suit application without cart tipper(s)		$1,535
☐	Lip and Latch Kit - to suit application with cart tipper(s)		$1,640
	☐ Single Tipper Center Mounted ☐ ngle Tipper Offeset to Curbside D☐ Tippers		
☐	Single Control Valve Section with Control Handle	MG2	$1,325
☐	Double Control Valve Section with Control Handles	MG2	$2,030
☐	Single Cart Tipper Control Valve, Handle, Plumbing and Hose Kit	MG2	$1,985
☐	Dual Cart Tipper Control Valve, Handle, Plumbing and Hose Kit	MG2	$3,225
☐	Bayne Cart Tipper - Specify Model - Includes Controls, Valves, Plumbing, and Installation		See Bayne
☐	Customer Installed Single Cart Tipper Kit - Bayne Bracket, Control Valve, Handle, Plumbing and Hose Kit	MG1	$2,325
☐	Customer Installed Double Cart Tipper Kit - Bayne Bracket, Control Valve, Handle, Plumbing and Hose Kit	MG1	$3,560
	Specify Brand and Model		

CUSTOMER SUPPLIED CART TIPPERS ARE NOT ADMISSIBLE

Effective December 1, 2017 PowerTrak Commercial Plus Sales Order Form

Body Options

☐	PowerTrak Comm. H.D. Contractors Package (incl. 3/16" hopper floor overlay liner and 10 ga. hopper wall overlay liners @ 400 BHN - 180,000 psi)		$2,185
☐	Body Front Head Closure Kit	B22	$765
☐	Body Front Head Spash Guard (Extends the front head an extra 11.5")		$330
☐	Side Door Interlock Kit - shuts down pump when open (requires Hot Shift PTO or Front mount pump)		$520
☐	Hydraulic Pressure Gauge Kit (shipped loose in cab)	B2	$305
☐	High Pressure Filter Kit	B3	$905
☐	Hydraulic Oil Tank Heater - 500 watt		$1,185
☐	Hydraulic Tank Low Oil Level Warning Kit		$1,080
☐	In-Body Oil Tank	B14	$1,230
☐	60 Gallon Washout Tank	B10	$2,025
☐	20 lb. Fire Extinguisher with Bracket	B4	$495
☐	Dual 20 lb. Fire Extinguisher with Bracket		$995
☐	Tool Box (18" x 18" x 36") - frame mounted	B5	$810
☐	Tool Box (18" x 18" x 24") - frame mounted	B5	$765
☐	Broom and Shovel Rack - mounted on tailgate	B16	$215
☐	Mud Flaps - anti-sail / anti-splash - mounted ahead of rear tires	B7	$225
☐	Mud Flaps - anti-sail / anti-splash - tailgate mounted behind rear tires	B7	$310
☐	Mud Guards - steel - mounted ahead of rear tires	B8	$335
☐	5 Gallon Cooler and Bracket - frame mounted	B12	$350
☐	Return Line Check Valve Kit	B11	$505
☐	1/4" Body Floor Kit		$2,400
☐	Roof Tube Cover Kit		$1,040
☐	Fender Extension Kit		$725
☐	Roadway Sign Frames		$2,020
☐	Spill Kit - In Cab		$340
☐	Spill Kit - Front of Body		$340
☐	Hydraulic Oil Tank Quick Disconnect Kit - For use with filter buggy		$820
☐	Anti-Back Pack Valve Kit		$950

Camera Systems

All camera systems are mounted with protective camera brackets and twin tailgate flood lights

CAMERA MONITOR LOCATION WILL BE CAB ROOF MOUNTED

Swivel monitor bracket will be provided for dual drive chassis

360 * Camera Systems and Options

☐	360 Degree Camera Package - Includes 360 degree camera system (4 camera), DVR capability, Dash Camera, Operator Facing Camera, and Hopper Camera.		$9,340
☐	360 Base Camera System - Includes 360 (4 Camera System) for Monitoring Only		$8,440
☐	Add DVR for Recording Function - Includes Dash Camera for Road Facing View		$1,680
☐	Add Operator Facing Camera for Operator Monitoring		$385
☐	Add Hopper Camera		$1,035

3rd Eye Camera Systems

☐	3rd Eye Single Camera with LCD Color Monitor		$1,580
☐	3rd Eye Double Camera with LCD Color Monitor		$2,030
☐	3rd Eye Triple Camera with LCD Color Monitor		$2,475
	Camera 1 Location - Mounted on Tailgate Facing Rear		
	Camera 2 Location - Choose: ☐ Left Hand Side Cab - ☐ Right Hand Side Cab		
	Camera 3 Location - Choose: ☐ Left Hand Side Cab - ☐ Right Hand Side Cab		

Load Cell Scale Systems

☐	Heil Optimum Payload System (HOPS) using Air-Weigh Axle Scales	CE20	$8,740
☐	Air-Weigh Axle Scale System without Interlock	CE20	$8,155

Auxiliary Axle Options

FALSE

☐	Watson & Chalin Rigid Axle: 20,000 pound capacity, hub piloted or 20" spoke wheel hubs, 30/30 brake chambers, automatic slack adjusters, 1,300 cubic inch air tank and regulator kit - for pusher applications		$10,835

Auxiliary Axle Tire Options

☐	255/70R-22.5 - load range H, 5,510 pound single max load at 120 psi with rim - 2 tires installed		$2,240
☐	275/70R-22.5 - load range H, 7,000 pound single max load at 120 psi with rim - 2 tires installed		$2,835
☐	255/70R-22.5 - load range H, 5,510 pound single max load at 120 psi with rim - 4 tires installed, Pusher and Tag		$4,565
☐	275/70R-22.5 - load range H, 7,000 pound single max load at 120 psi with rim - 4 tires installed, Pusher and Tag		$5,775

* Note: All auxiliary applications must be approved by Heil prior to order acceptance

Effective December 1, 2017 PowerTrak Commercial Plus Sales Order Form			
CNG Installation - Top of Body Installation			
☐	CNG Installation Charge - Includes brackets, hardware, and mounting of CNG system		$5,625
Extended Complete Body Warranty Options			
☐	Two (2) Year (Months 13-24) (Maximum 4,000 hrs. of Operation) Complete Heil Body Warranty		$3,340
☐	Three (3) Year (Months 13-36) (Maximum 6,000 hrs. of Operation) Complete Heil Body Warranty		$6,745
☐	Four (4) Year (Months 13-48) (Maximum 8,000 hrs. of Operation) Complete Heil Body Warranty		$10,090
☐	Five (5) Year (Months 13-60) (Maximum 10,000 hrs. of Operation) Complete Heil Body Warranty		$13,430
Extended Cylinder Warranty Options			
☐	Two (2) Year (Months 13-24) (Maximum 4,000 hrs. of Operation) All Cylinder Warranty -		$1,130
☐	Three (3) Year (Months 13-36) (Maximum 6,000 hrs. of Operation) All Cylinder Warranty -		$2,335
☐	Four (4) Year (Months 13-48) (Maximum 8,000 hrs. of Operation) All Cylinder Warranty -		$3,475
☐	Five (5) Year) (Months 13-60) (Maximum 10,000 hrs. of Operation) All Cylinder Warranty-		$4,465
Paint Options			
NOTE: LIST PAINT CODES ON PAINT DIAGRAM			
☐	Customized Paint Color - Paint Color Code NOT included in the Color Smart Brochure		$390
☐	Two Tone Paint		$1,490
☐	Paint Striping - first stripe		$1,250
☐	Paint Striping - each additional stripe		$695
☐	Metallic Paint		$5,000
☐	Clear coat Finish		$1,735
☐	Anti-Graffiti Clear coat Finish		$2,495
☐	Prime Paint Only - deduct		($970)

TOTALS			
	Total from Options Above (MSRP)		**$0**
	Additional Options (Custom's, Chassis Mods, Etc.) Total		
	Subtotal		**$0**
	Dealer Discount (%)	**0%**	**$0**
	Dealer Net Price		**$0**
	Additional Discount (SPR)		
	Freight		
	Total Price per Unit		**$0**

POWERTRAK® COMMERCIAL PLUS

Paint Stripe & Accessories Requirements

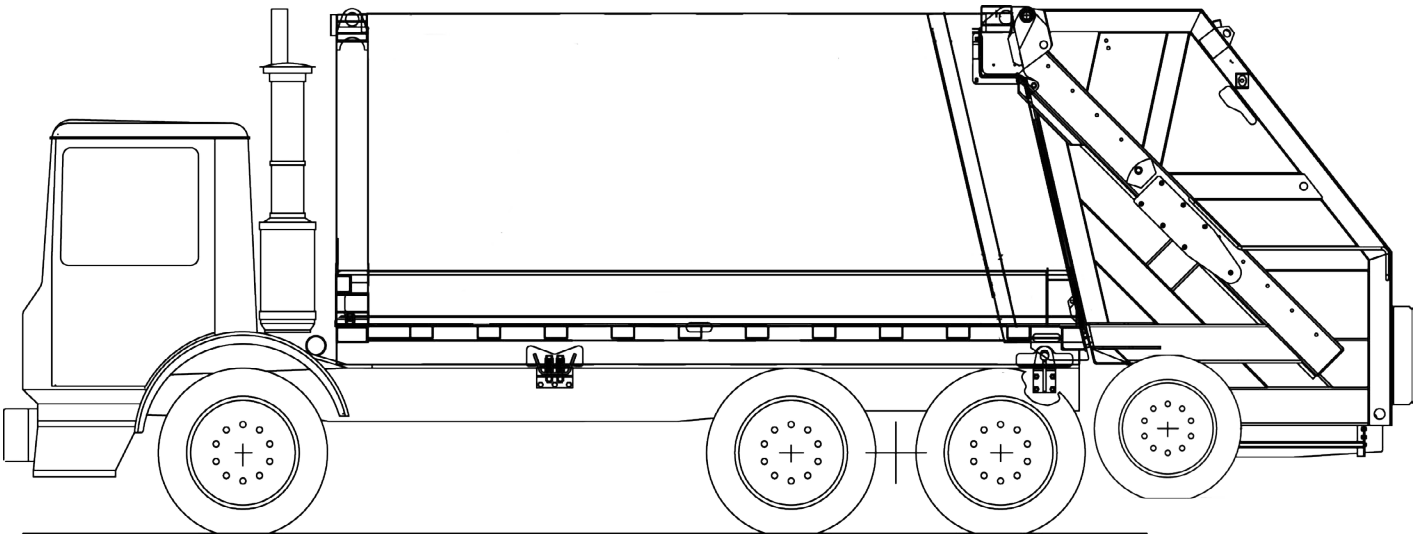

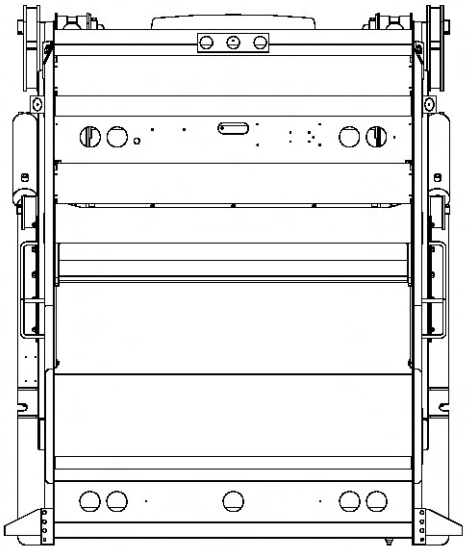

PAINT AND OPTIONS LAYOUT DETAIL
USE THIS FORM TO DESCRIBE PAINT SCHEMES
BE SPECIFIC ABOUT DIMENSIONS AND DETAILS

Sales Order #		Submitted by	
Customer			
Paint Color 1			
Paint Color 2			
Paint Color 3			
Chassis Make			
Chassis Model			
Wheelbase			
Body Size		Approved by	

DuraPack® Rapid Rail®

High-Performance Automated Side Loader

Standard Equipment Features included in Base Price

- 4.7 yd³ hopper
- 96 in. lift reach
- Standard 1-year (2,000 hours of operation) warranty
- Lift capacity up to 1,600 lbs
- Street side door with step and grab handle (includes side door interlock)
- Under hopper liquid sump with 2 clean-out doors and steel rake
- Body service props for dump or service hoist models
- Tailgate service props
- Fully automatic Shur-Lock™ tailgate locks
- O.I.G.A.I. front mount tandem vane pump system
- Chassis frame mounted oil tank with level/temperature gauge and oil suction shut-off valve
- 3-micron return line filter with magnetic trap and in-cab filter bypass monitor - in microns
- Abrasion-resistant hydraulic hoses
- In-cab packing controls, electric/air
- In-cab lift controls, electric, 5-button joystick
- In-cab hoist controls for dumping models, air
- In-cab tailgate controls, air
- 100-micron suction line strainer
- Cortex Controller™ with InSight™ diagnostic display and standard lift cycle counter
- Lift feathering kit
- 6-roller carriage
- Solid-state control panel
- Grabber interlock kit - prevents lift raise with grabbers in the open position/grabbers opening in the lift raise position
- In-cab function and indicator lights
- Select-O-Pack
- AutoLift™
- Arm rest
- Lift reach warning
- Backup alarm
- Backup and license plate lights
- LED center-mounted brake light
- LED duplicate high and low mount stop, turn, and tail lights
- LED Mid-body turn signals
- LED FMVSS #108 clearance lights and reflectors
- ICC reflective tape
- Rear mud flaps - anti-sail/anti-splash
- Rear underride guard
- Rear camera bracket and flood lights - reverse activated
- Customer's choice of one color finish paint from ColorSmart brochure
- ANSI Z 245.1-2012 compliant
- Cavity coat and joint sealer
- Rremote packer lube kit
- 5 lb in-cab fire extinguisher
- Safety triangle
- Severe-duty packer wear bar kit - hopper only

Effective December 1, 2017 DuraPack Rapid Rail Sales Order Form

Base Units DuraPack Rapid Rail			
☐	22 cubic yard - CNrG Tailgate Not Available With This Body Size		$126,525
	☐ EJECT ☐ DUMP ☐ Service Hoist ☐ Serviceable Eject		
☐	24 cubic yard - CNrG Tailgate Not Available With This Body Size		$127,570
	☐ EJECT ☐ DUMP ☐ Service Hoist ☐ Serviceable Eject		
☐	26 cubic yard - CNrG Tailgate Reduces Tailgate Capacity by **2** Cubic Yards - **24 Cubic Yard Unit With CNrG**		$129,660
	☐ EJECT ☐ DUMP ☐ Service Hoist ☐ Serviceable Eject		
☐	28 cubic yard - CNrG Tailgate Reduces Tailgate Capacity by **2** Cubic Yards - **26 Cubic Yard Unit With CNrG**		$130,705
	☐ EJECT ☐ DUMP ☐ Service Hoist ☐ Serviceable Eject		
☐	33 cubic yard - CNrG Tailgate Reduces Tailgate Capacity by **2** Cubic Yards - **31 Cubic Yard Unit With CNrG**		$133,845
	☐ EJECT ☐ DUMP ☐ Service Hoist ☐ Serviceable Eject		
☐	Service Hoist Kit	B9	$4,365
☐	Serviceable Eject		$2,300
Hopper Size			4.7 yd³

CHASSIS MUST COMFORM WITH HEIL'S MOST CURRENT CHASSIS SPECIFICATIONS AT WWW.HEIL.COM

* NOTE: Red numbers reference Option Photo Index

Mounting Options			
☐	Full Factory Mount for Service Hoist, Eject Models, and Serviceable Eject		$5,505
☐	Full Factory Mount for Dump Models		$5,915
☐	Mount at Dealer Destination		$735
Grabber and Lift Options			
☐	TriCuff Grabber - handles a variety of 30 to 110 gallon square, rectangular and round semi-automated and automated barrels	MG16	$1,315
☐	TriCuff Grip Rite Grabber - handles a variety of 30 to 110 gallon square, rectangular and round semi-automated and automated barrels. No Spring Tensioner		$1,315
☐	Belt Grabbers with Spring Loaded Inner Arm - to accommodate 60/90 gallon round automated barrels	MG15	$1,315
☐	Universal Belt Grabbers with Spring Loaded Inner Arm - to accommodate 90 - 300 gallon round automated barrels	MG18	$1,315
☐	Changeable Spring Steel Grabbers - for 60 and 90 gallon round automated barrels with 26" - 27" grab diameter	MG17	$1,315
☐	Changeable Spring Steel Grabbers - for 300 gallon round automated barrels with 41" - 43" grab diameter	MG17	$1,315
☑	Grabber storage bracket supplied at no charge when any TWO sets of spring steel grabbers are ordered		
Power Take Off / Pump Options			
☐	Operate-in-gear-at-idle (OIGAI) Front Mount Tandem Vane Pump		STD
☐	Operate-in-gear-at-idle (OIGAI) Remote Mount Tandem Vane Pump with Transmission Driven, Constant Duty PTO		$2,950
☐	890 Hot Shift PTO with Tandem Vane Pump		$3,735
☐	897 Constant Duty PTO with Tandem Vane Pump		$3,735
Lighting and Electrical Accessories			
☐	Hopper and Lift Work Light Kit - LED - two lights - in-cab switch	L11	$725
☐	Multi-Function (SMART) LED Strobe / Turn Lamps - includes LED light package for entire unit	L10	$610
☐	Body Side Backing Assist Lights mounted front body bolster - reverse activated	L6	$505
☐	Strobe Light, Amber - in-cab switch, pump on, and reverse activated - mounted lower tailgate	L4	$670
☐	Dual Oval Flat LED Strobes - in-cab switch - mounted mid-tailgate	L15	$1,055
☐	Dual Oval Flat LED Strobes - in-cab switch, pump on, and reverse activated - mounted mid-tailgate	L15	$1,055
☐	Dual Front Oval LED Strobes		$770
☐	Strobe Light, Amber - in-cab switch - mounted on cab	L4	$670
Lift Controls, Options and Accessories			
☐	Lift Cycle Counter In Addition to the Counter Provided with the Standard In Sight Display	CE8	$645
☐	Remote Lift Controls - mounted under seat on right hand side	CE9	$1,540
☐	Rapid Rail Style Control Box with paddle switches		$1,535

Effective December 1, 2017 DuraPack Rapid Rail Sales Order Form

	Body Options		
☐	Hopper and Body Floor Liner (3/16" - 150,000 psi)		$1,375
☐	1/4" AR400 Body Floor in lieu of standard 3/16" AR400		$1,280
☐	3" Hopper Drain Valve	B20	$345
☐	Mud Guards - steel - mounted ahead of tires	B8	$325
☐	Mud Flaps - anti-sail / anti-splash - ahead of rear tires	B7	$225
☐	Hopper Hood	B35	$1,975
☐	Manual Hopper Cover - Standard Cover - mesh expanded metal with extended handle accessible from ground	B33	$1,210
☐	Manual Hopper Cover for use with Hopper Hood		$1,210
☐	Hydraulic Sliding Top Door with Lift Interlock and indicator light in cab - Cannot be used in conjunction with hopper hood	B28	$6,680
☐	Triple Cart Holder - mounted on tailgate for transporting empty carts - Not Available with CNrG CNG System		$360
☐	20 lb. Fire Extinguisher with Bracket	B4	$500
☐	Dual 20 lb. Fire Extinguishers with Bracket		$995
☐	Tool Box (18" x 18" x 36") - frame mounted - available on Eject Models Only	B5	$815
☐	Tool Box (18" x 18" x 24") - frame mounted - available on Eject Models Only	B5	$765
☐	Tool Box (18" x 18" x 24") - bumper mounted	B6	$765
☐	Hydraulic Pressure Gauge Kit (shipped loose in cab)	B2	$305
☐	Hydraulic Oil Tank Heater - 500 watts		$1,185
☐	Hydraulic Tank Low Oil Level Warning Kit		$1,080
☐	Dual High Pressure Filter Kit	B3	$1,795
☐	Rear Caution Decal	B24	$285
☐	Return Line Check Valve Kit		$505
☐	Broom and Shovel Kit - Mounted Underbody - Includes Broom and Shovel		$210
☐	Hydraulic Oil Tank Quick Disconnect Kit - For use with filter buggy		$815
☐	Spill Kit		$445
☐	Fender Extension Kit		$725
☐	Sump Chutes		$465
☐	Tapered Roof Kit - Only Available in 28 cubic yard units - Helps reduce trash from blowing out		$1,495
☐	Low Profile Shur Lock Tailgate Locks MUST be used with Tag Axle Applications - Does not have T/G closed indicator flag		$360
☐	Infinity Series Packer/Eject Cylinders with scrapers and hardened rods to 50 HRC - Includes Five (5) Year Packer/Eject Cylinder Only Warranty that covers dents and dings (This Option is Required if purchasing extended warranty's below)		$3,055

Note: Hopper hood may not be ordered in conjunction with a sliding top door

	CNrG Tailgate Mounted CNG - Includes Installation Fee - Reduces Yardage Capacity 2 Cubic Yards		
☐	60 DGE CNG System - NOT AVAILABLE ON A DUMP UNIT		$40,425
☐	75 DGE CNG System - NOT AVAILABLE ON A DUMP UNIT		$42,110
☐	90 DGE CNG System - NOT AVAILABLE ON A DUMP UNIT		$47,865
	CNrG Options		
☐	Front Bumper Fill with Kill Cap		$1,250
☐	Defuel Transfer Hose - 35 ft.		$1,990

Camera Systems

All camera systems are mounted with protective camera brackets and twin tailgate flood lights

CAMERA MONITOR LOCATION WILL BE CAB ROOF MOUNTED

Swivel monitor bracket will be provided for dual drive chassis

	360 ° Camera Systems and Options		
☐	360 Degree Camera Package - Includes 360 degree camera system (4 camera), DVR capability, Dash Camera, Operator Facing Camera, and Hopper Camera.		$10,260
☐	360 Base Camera System - Includes 360 (4 Camera System) for Monitoring Only		$8,440
☐	Add DVR for Recording Function - Includes Dash Camera for Road Facing View		$1,680
☐	Add Operator Facing Camera for Operator Monitoring		$385
☐	Add Hopper Camera		$1,035
	3rd Eye Camera Systems		
☐	3rd Eye Single Camera with LCD Color Monitor		$1,580
☐	3rd Eye Double Camera with LCD Color Monitor		$2,030
☐	3rd Eye Triple Camera with LCD Color Monitor		$2,475
	Camera 1 Location - Mounted on Tailgate Facing Rear		
	Camera 2 Location - ☐ Left Hand Side Cab - ☐ Right Hand Side Cab - ☐ Hopper - ☐ Grabber		
	Camera 3 Location - ☐ Left Hand Side Cab - ☐ Right Hand Side Cab - ☐ Hopper - ☐ Grabber		
	Load Cell Scale Systems		
☐	Heil Optimum Payload System (HOPS) using Air-Weigh Axle Scales	CE20	$8,740
☐	Air-Weigh Axle Scale System without Interlock	CE20	$8,155

Auxiliary Axles and Tires

* NOTE: All axles MUST BE installed with tires so chassis can be re-certified to new GAWR and GVWR ratings. Tag Axle applications will automatically receive the low profile Shur Lock tailgate lock kit at the price listed below.

☐	Watson & Chalin Self Steering Pusher Axle: 13,500 pound capacity, hub piloted or 20" spoke wheel hubs, automatic slack adjusters, type 16 air chambers, steering stabilizer kit and reverse lift kit		$14,175
☐	Watson & Chalin Self Steering Tag Axle: 13,500 pound capacity, hub piloted or 20" spoke wheel hubs, automatic slack adjusters, type 16 air chambers, steering stabilizer kit and reverse lift kit, includes Tag Axle Spill Shield		$14,560
☐	Watson & Chalin Rigid Pusher Axle: 20,000 pound capacity, hub piloted or 20" spoke wheel hubs, 30/30 brake chambers, automatic slack adjusters, 1,300 cubic inch air tank and regulator kit		$11,150
☐	Watson & Chalin Rigid Tag Axle: 20,000 pound capacity, hub piloted or 20" spoke wheel hubs, 30/30 brake chambers, automatic slack adjusters, 1,300 cubic inch air tank and regulator kit.		$11,150
☐	Tag Axle Lock-Down Kit - required on dumping units		$1,215
☐	Tag Axle Steering Lock Kit - required on all dump units with steerable tag axles if not provided with the axle		$1,215
☐	Low profile Shur Lock tailgate lock kit.		$360
☐	255/70R-22.5 - load range H, 5,510 pound single max load at 120 psi with rim - 2 tires installed		$2,240
☐	275/70R-22.5 - load range H, 7,000 pound single max load at 120 psi with rim - 2 tires installed		$2,835
☐	11 R-22.5 - load range H, 6,610 pound single max load at 120 psi with rim - 2 tires installed		$2,390

* Note: All auxiliary applications must be approved by Heil prior to order acceptance

Effective December 1, 2017 DuraPack Rapid Rail Sales Order Form

CNG Installation - Top of Body Installation			
☐	CNG Installation Charge - Includes brackets, hardware, and mounting of CNG system		$5,625
Extended Complete Body Warranty Options			
☐	Two (2) Year (Months 13-24) (Maximum 4,000 hrs. of Operation) Complete Heil Body & Lift Warranty Requires additional purchase of Infinity packer/eject cylinders from above		$4,100
☐	Three (3) Year (Months 13-36) (Maximum 6,000 hrs. of Operation) Complete Heil Body & Lift Warranty Requires additional purchase of Infinity packer/eject cylinders from above		$8,195
☐	Four (4) Year (Months 13-48) (Maximum 8,000 hrs. of Operation) Complete Heil Body & Lift Warranty Requires additional purchase of Infinity packer/eject cylinders from above		$12,255
☐	Five (5) Year (Months 13-60) (Maximum 10,000 hrs. of Operation) Complete Heil Body & Lift Warranty Requires additional purchase of Infinity packer/eject cylinders from above		$16,355
Extended Cylinder Warranty Options			
☐	Two (2) Year (Months 13-24) (Maximum 4,000 hrs. of Operation) All other Non-Infinity Cylinder Warranty - Requires additional purchase of Infinity packer/eject cylinders from above		$3,300
☐	Three (3) Year (Months 13-36) (Maximum 6,000 hrs. of Operation) All other Non-Infinity Cylinder Warranty - Requires additional purchase of Infinity packer/eject cylinders from above		$5,830
☐	Four (4) Year (Months 13-48) (Maximum 8,000 hrs. of Operation) All other Non-Infinity Cylinder Warranty - Requires additional purchase of Infinity packer/eject cylinders from above		$8,725
☐	Five (5) Year (Maximum 10,000 hrs. of Operation) All other Non-Infinity Cylinder Warranty - Requires purchase of Infinity packer or eject Cylinders from above		$11,050
Paint Options			
NOTE: LIST PAINT CODES ON PAINT DIAGRAM			
☐	Customized Paint Color - Paint Color Code NOT included in the Color Smart Brochure		$390
☐	Customized Lift Paint - Any color other than Visibility Yellow (Standard)		$325
☐	Two Tone Paint		$1,485
☐	Paint Striping - first stripe		$1,250
☐	Paint Striping - each additional stripe		$695
☐	Metallic Paint		$5,000
☐	Clear coat Finish		$1,735
☐	Anti-Graffiti Clear coat Finish		$2,500
☐	Prime Paint Only - deduct		($1,220)
TOTALS			
	Total from Options Above (MSRP)		**$0**
	Additional Options (Custom's, Chassis Mods, Etc.) Total		
	Subtotal		**$0**
	Dealer Discount (%)	**0%**	**$0**
	Dealer Net Price		**$0**
	Additional Discount (SPR)		
	Freight		
	Total Price per Unit		**$0**

DURAPACK® RAPID RAIL®

Paint Stripe & Accessories Requirements

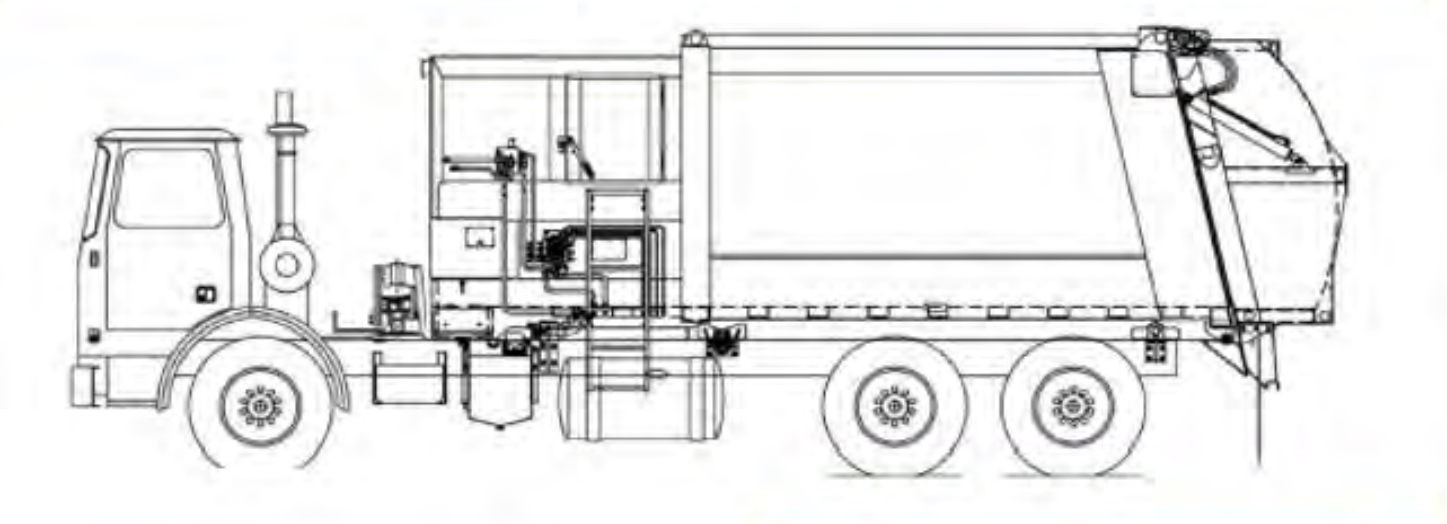

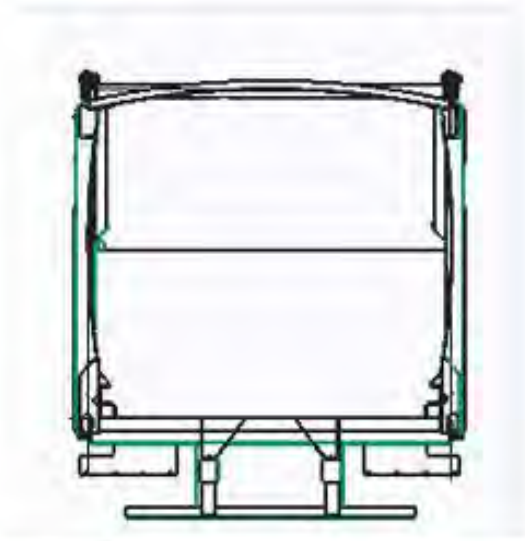

PAINT AND OPTIONS LAYOUT DETAIL
USE THIS FORM TO DESCRIBE PAINT SCHEMES
BE SPECIFIC ABOUT DIMENSIONS AND DETAILS

Sales Order #		Submitted by	
Customer			
Paint Color 1			
Paint Color 2			
Paint Color 3			
Chassis Make			
Chassis Model			
Wheelbase			
Body Size		Approved by	

DuraPack® Python®

High-Performance Automated Side Loader

Standard Equipment Features included in Base Price

- 5.2yd ³ hopper
- 108 in. lift reach
- Python Lift - 2 year limited structural w arranty
- Lift capacity up to 800 lbs.
- Street side access door w ith step and grab handle (includes side door interlock)
- Under hopper liquid sump w ith 2 clean-out doors and steel rake
- Body service props for dump or service hoist models
- Tailgate service props
- Fully automatic Shur-Lock™ tailgate locks
- O.I.G.A.I front mount tandem vane pump system
- Cushioned up and dow n chrome-plated rods
- Chassis frame-mounted oil tank w ith level / temperature gauge and suction shut-off valve
- 3-micron return line filter w ith magnetic trap and in-cab filter bypass monitor - in microns
- Abrasion-resistant hydraulic hoses
- In-cab packing controls, electric/air
- In-cab lift controls, air/electric, joystick
- In-cab hoist controls for dumping models, air
- In-cab tailgate controls, air
- 100-micron suction line strainer
- Cortex Controller™ w ith InSight™ diagnostic display and standard lift cycle counter
- Severe duty packer wear bar kit - hopper only
- In-cab function and indicator lights
- Select-O-Pack
- AutoLift™
- Arm rest
- Lift reach w arning
- Backup alarm
- Backup and license plate lights
- LED center mounted brake light
- LED duplicate high and low mount stop, turn, and tail lights
- LED mid-body turn signals
- LED FMVSS #108 clearance lights and reflectors
- ICC reflective tape
- Rear mud flaps- anti-sail/anti-splash
- Rear underride guard
- Rear camera bracket and flood lights - reverse activated
- Body undercoating
- Customer's choice of one color finish paint from ColorSmart brochure
- Standard 1-year (2,000 hours of operation) w arranty
- ANSI Z 245.1-2012 Compliant
- Cavity coat and joint sealer
- Remote packer lube kit
- 5 lb. In-Cab Fire Extinguisher
- Safety Triangle

Environmental Solutions Group
A DOVER COMPANY

Effective December ,1,2017 DuraPack Python Sales Order Form

Base Units DuraPack Python			
☐	22 cubic yard - CNrG Tailgate Not Available With This Body Size		$118,880
	☐ EJECT ☐ DUMP ☐ Service Hoist ☐ Serviceable Eject		
☐	24 cubic yard - CNrG Tailgate Not Available With This Body Size		$119,930
	☐ EJECT ☐ DUMP ☐ Service Hoist ☐ Serviceable Eject		
☐	26 cubic yard - CNrG Tailgate Reduces Tailgate Capacity by **2** Cubic Yards - **24 Cubic Yard Unit With CNrG**		$122,000
	☐ EJECT ☐ DUMP ☐ Service Hoist ☐ Serviceable Eject		
☐	28 cubic yard - CNrG Tailgate Reduces Tailgate Capacity by **2** Cubic Yards - **26 Cubic Yard Unit With CNrG**		$123,045
	☐ EJECT ☐ DUMP ☐ Service Hoist ☐ Serviceable Eject		
☐	33 cubic yard - CNrG Tailgate Reduces Tailgate Capacity by **2** Cubic Yards - **31 Cubic Yard Unit With CNrG**		$126,151
	☐ EJECT ☐ DUMP ☐ Service Hoist ☐ Serviceable Eject		
☐	Service Hoist Kit	B9	$4,385
☐	Serviceable Eject		$2,310
Hopper Size			5.2 yd³

CHASSIS MUST COMFORM WITH HEIL'S MOST CURRENT CHASSIS SPECIFICATIONS AT WWW.HEIL.COM

* NOTE: Red numbers reference Option Photo Index

Mounting Options			
☐	Full Factory Mount for Service Hoist, Eject Models, and Serviceable Eject		$5,505
☐	Full Factory Mount for Dump Models		$5,915
☐	Mount at Dealer Destination		$735
Grabber and Lift Options			
☐	TriCuff Grabber - handles a variety of 30 to 110 gallon square, rectangular and round semi-automated and automated barrels	MG16	$1,315
☐	TriCuff Grip Rite Grabber - handles a variety of 30 to 110 gallon square, rectangular and round semi-automated and automated barrels. No Spring Tensioner		$1,315
☐	Belt Grabbers with Spring Loaded Inner Arm - to accommodate 60/90 gallon round automated barrels	MG15	$1,315
☐	Universal Belt Grabbers with Spring Loaded Inner Arm - to accommodate 90 - 300 gallon round automated barrels	MG18	$1,315
☐	Changeable Spring Steel Grabbers - for 60 and 90 gallon round automated barrels with 26" - 27" grab diameter	MG17	$1,315
☐	Changeable Spring Steel Grabbers - for 300 * gallon round automated barrels with 41" - 43" grab diameter	MG17	$1,315
☐	Grabber Interlock Kit - prevents lift raise with grabbers in open position and grabbers opening in the lift raised position		$1,190
☐	Grabber storage bracket supplied at no charge when any TWO sets of spring steel grabbers are ordered		
Power Take Off / Pump Options			
☐	Operate-in-gear-at-idle (OIGAI) Front Mount Tandem Vane Pump		STD
☐	Operate-in-gear-at-idle (OIGAI) Remote Mount Tandem Vane Pump with Transmission Driven, Constant Duty PTO		$2,950
☐	890 Hot Shift PTO with Tandem Vane Pump		$3,735
☐	897 Constant Duty PTO with Tandem Vane Pump		$3,735
Lighting and Electrical Accessories			
☐	Hopper and Lift Work Light Kit - LED - two lights - in-cab switch	L11	$725
☐	Multi-Function (SMART) LED Strobe / Turn Lamps - includes LED light package for entire unit	L10	$610
☐	Body Side Backing Assist Lights mounted front body bolster - reverse activated	L6	$505
☐	Strobe Light, Amber - in-cab switch, pump on, and reverse activated - mounted lower tailgate	L4	$670
☐	Dual Oval Flat LED Strobes - in-cab switch - mounted mid-tailgate	L15	$1,055
☐	Dual Oval Flat LED Strobes - in-cab switch, pump on, and reverse activated - mounted mid-tailgate	L15	$1,055
☐	Dual Front Oval LED Strobes		$770
☐	Strobe Light, Amber - in-cab switch - mounted on cab	L4	$670
Lift Controls, Options and Accessories			
☐	Lift Cycle Counter In Addition to the Counter Provided with the Standard In Sight Display	CE8	$645
☐	Remote Lift Controls - mounted under seat on right hand side*	CE9	$1,540
☐	Additional Joystick Control for Lift - mounted in-cab	CE10	$1,785

Effective December 1, 2017 DuraPack Python Sales Order Form

	Body Options		
☐	Hopper and Body Floor Liner (3/16" - 150,000 psi)		$1,375
☐	1/4" AR400 Body Floor in lieu of standard 3/16" AR400		$1,280
☐	3" Hopper Drain Valve	B20	$345
☐	Mud Guards - steel - mounted ahead of tires	B8	$325
☐	Mud Flaps - anti-sail / anti-splash - ahead of rear tires	B7	$225
☐	Hopper Hood	B35	$1,975
☐	Manual Hopper Cover - Standard Cover - mesh expanded metal with extended handle accessible from ground	B33	$1,210
☐	Manual Hopper Cover for use with Hopper Hood		$1,210
☐	Hydraulic Sliding Top Door with Lift Interlock and indicator light in cab - Cannot be used in conjunction with hopper hood	B28	$6,680
☐	Triple Cart Holder - mounted on tailgate for transporting empty carts - Not Available with CNrG CNG System		$360
☐	20 lb. Fire Extinguisher with Bracket	B4	$500
☐	Dual 20 lb. Fire Extinguishers with Bracket		$995
☐	Tool Box (18" x 18" x 36") - frame mounted - available on Eject Models Only	B5	$815
☐	Tool Box (18" x 18" x 24") - frame mounted - available on Eject Models Only	B5	$765
☐	Tool Box (18" x 18" x 24") - bumper mounted	B6	$765
☐	Hydraulic Pressure Gauge Kit (shipped loose in cab)	B2	$305
☐	Hydraulic Oil Tank Heater - 500 watts		$1,185
☐	Hydraulic Tank Low Oil Level Warning Kit		$1,085
☐	Dual High Pressure Filter Kit	B3	$1,795
☐	Rear Caution Decal	B24	$285
☐	Return Line Check Valve Kit		$505
☐	Broom and Shovel Kit - Mounted Underbody - Includes Broom and Shovel		$210
☐	Hydraulic Oil Tank Quick Disconnect Kit - For use with filter buggy		$815
☐	Spill Kit		$445
☐	Fender Extension Kit		$725
☐	Sump Chutes		$465
☐	Tapered Roof Kit - Only Available in 28 cubic yard units - Helps reduce trash from blowing out		$1,495
☐	Low Profile Shur Lock Tailgate Locks MUST be used with Tag Axle Applications - Does not have T/G closed indicator flag		$360
☐	Infinity Series Packer/Eject Cylinders with scrapers and hardened rods to 50 HRC - Includes Five (5) Year Packer/Eject Cylinder Only Warranty that covers dents and dings (This Option is Required if purchasing extended warranty's below)		$3,055

Note: Hopper hood may not be ordered in conjunction with a sliding top door

	CNrG Tailgate Mounted CNG - Includes Installation Fee - Reduces Yardage Capacity 2 Cubic Yards		
☐	60 DGE CNG System - NOT AVAILABLE ON A DUMP UNIT		$40,425
☐	75 DGE CNG System - NOT AVAILABLE ON A DUMP UNIT		$42,110
☐	90 DGE CNG System - NOT AVAILABLE ON A DUMP UNIT		$47,865

	CNrG Options		
☐	Front Bumper Fill with Kill Cap		$1,250
☐	Defuel Transfer Hose - 35 ft.		$1,190

Camera Systems

All camera systems are mounted with protective camera brackets and twin tailgate flood lights

CAMERA MONITOR LOCATION WILL BE CAB ROOF MOUNTED

Swivel monitor bracket will be provided for dual drive chassis

	360 ° Camera Systems and Options		
☐	360 Degree Camera Package - Includes 360 degree camera system (4 camera), DVR capability, Dash Camera, Operator Facing Camera, and Hopper Camera.		$10,260
☐	360 Base Camera System - Includes 360 (4 Camera System) for Monitoring Only		$8,440
☐	Add DVR for Recording Function - Includes Dash Camera for Road Facing View		$1,680
☐	Add Operator Facing Camera for Operator Monitoring		$385
☐	Add Hopper Camera		$1,035

	3rd Eye Camera Systems		
☐	3rd Eye Single Camera with LCD Color Monitor		$1,580
☐	3rd Eye Double Camera with LCD Color Monitor		$2,030
☐	3rd Eye Triple Camera with LCD Color Monitor		$2,475

Camera 1 Location - Mounted on Tailgate Facing Rear

Camera 2 Location - ☐ Left Hand Side Cab - ☐ Right Hand Side Cab - ☐ Hopper - ☐ Grabber

Camera 3 Location - ☐ Left Hand Side Cab - ☐ Right Hand Side Cab - ☐ Hopper - ☐ Grabber

	Load Cell Scale Systems		
☐	Heil Optimum Payload System (HOPS) using Air-Weigh Axle Scales	CE20	$8,740
☐	Air-Weigh Axle Scale System without Interlock	CE20	$8,155

Auxiliary Axles and Tires

* NOTE: All axles MUST BE installed with tires so chassis can be re-certified to new GAWR and GVWR ratings. Tag Axle applications will automatically receive the low profile Shur Lock tailgate lock kit at the price listed below.

☐	Watson & Chalin Self Steering Pusher Axle: 13,500 pound capacity, hub piloted or 20" spoke wheel hubs, automatic slack adjusters, type 16 air chambers, steering stabilizer kit and reverse lift kit		$14,175
☐	Watson & Chalin Self Steering Tag Axle: 13,500 pound capacity, hub piloted or 20" spoke wheel hubs, automatic slack adjusters, type 16 air chambers, steering stabilizer kit and reverse lift kit ,includes Tag Axle Spill Shield		$14,560
☐	Watson & Chalin Rigid Pusher Axle: 20,000 pound capacity, hub piloted or 20" spoke wheel hubs, 30/30 brake chambers, automatic slack adjusters, 1,300 cubic inch air tank and regulator kit		$11,150
☐	Watson & Chalin Rigid Tag Axle: 20,000 pound capacity, hub piloted or 20" spoke wheel hubs, 30/30 brake chambers, automatic slack adjusters, 1,300 cubic inch air tank and regulator kit.		$11,150
☐	Tag Axle Lock-Down Kit - required on dumping units		$1,215
☐	Tag Axle Steering Lock Kit - required on all dump units with steerable tag axles if not provided with the axle		$1,215
☐	Low profile Shur Lock tailgate lock kit.		$360

* Note: All auxiliary applications must be approved by Heil prior to order acceptance

Auxiliary Axle Tire Options

☐	255/70R-22.5 - load range H, 5,510 pound single max load at 120 psi with rim - 2 tires installed		$2,240
☐	275/70R-22.5 - load range H, 7,000 pound single max load at 120 psi with rim - 2 tires installed		$2,835
☐	11 R-22.5 - load range H, 6,610 pound single max load at 120 psi with rim - 2 tires installed		$2,390

Effective December 1, 2017 DuraPack Python Sales Order Form

CNG Installation - Top of Body Installation			
☐	CNG Installation Charge - Includes brackets, hardware, and mounting of CNG system		$5,625
Extended Complete Body Warranty Options			
☐	Two (2) Year (Months 13-24) (Maximum 4,000 hrs. of Operation) Complete Heil Body Warranty Requires additional purchase of Infinity packer/eject cylinders from above		$2,640
☐	Three (3) Year (Months 13-36) (Maximum 6,000 hrs. of Operation) Complete Heil Body & Lift Warranty Requires additional purchase of Infinity packer/eject cylinders from above		$8,195
☐	Four (4) Year (Months 13-48) (Maximum 8,000 hrs. of Operation) Complete Heil Body & Lift Warranty Requires additional purchase of Infinity packer/eject cylinders from above		$12,250
☐	Five (5) Year (Months 13-60) (Maximum 10,000 hrs. of Operation) Complete Heil Body & Lift Warranty Requires additional purchase of Infinity packer/eject cylinders from above		$16,350
Extended Cylinder Warranty Options			
☐	Two (2) Year (Months 13-24) (Maximum 4,000 hrs. of Operation) All other Non-Infinity Cylinder Warranty - Requires additional purchase of Infinity packer/eject cylinders from above		$2,950
☐	Three (3) Year (Months 13-36) (Maximum 6,000 hrs. of Operation) All other Non-Infinity Cylinder Warranty - Requires additional purchase of Infinity packer/eject cylinders from above		$5,830
☐	Four (4) Year (Months 13-48) (Maximum 8,000 hrs. of Operation) All other Non-Infinity Cylinder Warranty - Requires additional purchase of Infinity packer/eject cylinders from above		$8,725
☐	Five (5) Year (Maximum 10,000 hrs. of Operation) All other Non-Infinity Cylinder Warranty - Requires purchase of Infinity packer or eject Cylinders from above		$11,050
Paint Options			
NOTE: LIST PAINT CODES ON PAINT DIAGRAM			
☐	Customized Paint Color - Paint Color Code NOT included in the Color Smart Brochure		$390
☐	Customized Lift Paint - Any color other than Visibility Yellow (Standard)		$325
☐	Two Tone Paint		$1,485
☐	Paint Striping - first stripe		$1,250
☐	Paint Striping - each additional stripe		$695
☐	Metallic Paint		$5,000
☐	Clear coat Finish		$1,735
☐	Anti-Graffiti Clear coat Finish		$2,500
☐	Prime Paint Only - deduct		($1,220)

TOTALS			
	Total from Options Above (MSRP)		**$0**
	Additional Options (Custom's, Chassis Mods, Etc.) Total		
	Subtotal		**$0**
	Dealer Discount (%)	**0%**	**$0**
	Dealer Net Price		**$0**
	Additional Discount (SPR)		
	Freight		
	Total Price per Unit		**$0**

DURAPACK® PYTHON®

Paint Stripe & Accessories Requirements

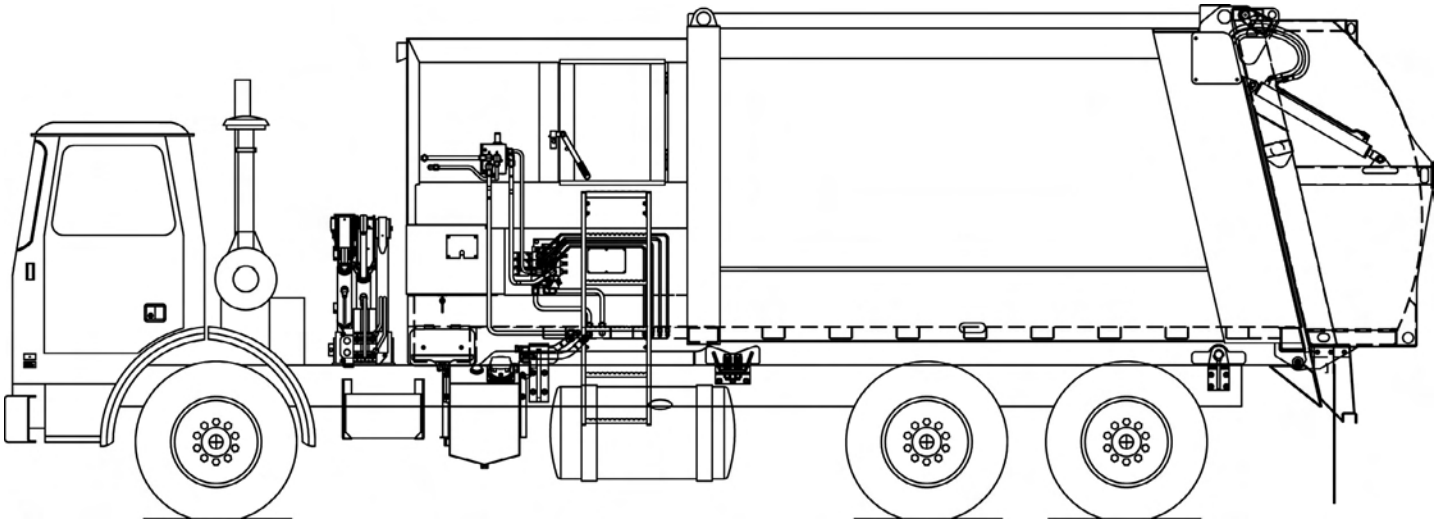

PAINT AND OPTIONS LAYOUT DETAIL
USE THIS FORM TO DESCRIBE PAINT SCHEMES
BE SPECIFIC ABOUT DIMENSIONS AND DETAILS

Sales Order #		Submitted by	
Customer			
Paint Color 1			
Paint Color 2			
Paint Color 3			
Chassis Make			
Chassis Model			
Wheelbase			
Body Size		Approved by	

Liberty™

Continuous-Pack Automated Side Loader

Standard Equipment Features included in Base Price

- 3.3 yd^3 hopper (self-cleaning)
- 108 in. lift reach
- Python Lift - 2-year limited structural warranty
- Lift capacity up to 800 lbs.
- Body service props
- Tailgate service props
- Fully automatic tailgate locks
- Grease zerks - for entire system only
- O.I.G.A.I. front mount tandem vane pump system
- Cushioned up and down with chrome-plated rods
- Chassis frame-mounted oil tank with level/temperature gauge and oil suction shut-off valve
- 3-micron return line filter with magnetic trap and in-cab filter bypass monitor - in microns
- 100-micron suction line strainer
- Abrasion-resistant hydraulic hoses
- In-cab packing controls, electric
- In-cab lift controls, air/electric, joystick
- In-cab hoist controls, electric
- In-cab tailgate controls, electric
- In-cab function and indicator lights
- AutoLift™
- Arm rest
- Lift reach warning
- Backup alarm
- Backup and license plate lights
- LED Center mounted brake light
- LED Duplicate high and low mount stop, turn, and tail lights
- LED Mid-body turn signals
- LED FMVSS #108 clearance lights and reflectors
- ICC reflective tape
- Rear mud flaps - anti-sail/anti-splash
- Rear underride guard
- Rear camera bracket and flood lights - reverse activated
- Customer's choice of one color finish paint from ColorSmart brochure
- Standard 1-year (2,000 hours of operator) warranty
- ANSI Z 245.1-2012 Compliant
- Cavity coat and joint sealer
- Inisde-body front closure
- Outside mounted upper packer lube line
- Safety Triangle
- 5 lb. In-Cab Fire Extinguisher
- Cortex Control™ with Insight™ diagnostic display and standard lift cycle counter
- Heavy duty packer paddle with liquid containment and shaft seals
- Observation ladder - mounted to street side of hopper

Effective December 1, 2017 Liberty Sales Order Form

Base Units Liberty - DUMP ONLY			
☐	16 cubic yard		$110,840
☐	20 cubic yard		$113,015
☐	22 cubic yard		$114,145
☐	24 cubic yard		$115,170
☐	26 cubic yard		$116,265
☐	30 cubic yard		$118,425
☐	32 cubic yard		$119,525
Hopper Size			3.3 yd³
CHASSIS MUST COMFORM WITH HEIL'S MOST CURRENT CHASSIS SPECIFICATIONS AT WWW.HEIL.COM			
* NOTE: Red numbers reference Option Photo Index			
Mounting Options			
☐	Full Factory Mount for Dump Models		$5,915
☐	Mount at Dealer Destination		$735
Grabber and Lift Options			
☐	TriCuff Grabber - handles a variety of 30 to 110 gallon square, rectangular and round semi-automated and automated barrels	MG16	$1,315
☐	TriCuff Grip Rite Grabber - handles a variety of 30 to 110 gallon square, rectangular and round semi-automated and automated barrels. No Spring Tensioner		$1,315
☐	Belt Grabbers with Spring Loaded Inner Arm - to accommodate 60/90 gallon round automated barrels	MG15	$1,315
☐	Universal Belt Grabbers with Spring Loaded Inner Arm - to accommodate 90 - 300 * gallon round automated barrels	MG18	$1,315
☐	Changeable Spring Steel Grabbers - for 60 and 90 gallon round automated barrels with 26" - 27" grab diameter	MG17	$1,315
Power Take Off / Pump Options			
☐	Operate-in-gear-at-idle (OIGAI) Front Mount Tandem Vane Pump		STD
☐	Operate-in-gear-at-Idle (OIGAI) Front Mount Tandem Vane Pump - For Low Torque Engines		$265
☐	Operate-in-gear-at-idle (OIGAI) Remote Mount Tandem Vane Pump with Transmission Driven, Constant Duty PTO		$2,950
☐	Operate-in-gear-at-Idle (OIGAI) Remote Mount Tandem Vane Pump with Transmission Driven, Constant Duty PTO - For Low torque engines		$3,205
☐	890 Hot Shift PTO with Tandem Vane Pump		$3,735
☐	897 Constant Duty PTO with Tandem Vane Pump		$3,735
Lighting and Electrical Accessories			
☐	Hopper and Lift Work Light Kit - in-cab switch	L11	$475
☐	Multi-Function (SMART) LED Strobe / Turn Lamps - includes LED light package for entire unit	L10	$610
☐	Body Side Backing Assist Lights - reverse activated	L6	$505
☐	Dual Flashing 7" Amber LED Lights on Tailgate - mounted top	L7	$1,055
☐	Strobe Light, Amber - in-cab switch - mounted mid-tailgate	L4	$670
☐	Strobe Light, Amber - in-cab switch, pump on, and reverse activated - mounted mid-tailgate	L4	$670
☐	Dual Strobe Lights, Amber - in-cab switch - mounted mid-tailgate	L4	$965
Lift Controls, Options and Accessories			
☐	Lift Cycle Counter	CE8	$645
☐	Remote Lift Controls - mounted under seat on right hand side	CE9	$1,540
	*AutoPack is not available with Lever Controls		

Effective December 1, 2017 Liberty Sales Order Form

Body Options			
☐	Reinforced Tailgate Hinge		$510
☐	Heavy Duty Overlay Package - hopper, floor and sides, 48” into body (3/16” - 100,000 psi)		$3,265
☐	3” Hopper Drain Valve	B20	$345
☐	Mud Guards - steel - mounted ahead of rear tires	B8	$330
☐	Mud Flaps - anti-sail / anti-splash - ahead of rear tires	B7	$225
☐	Manual Hopper Cover - mesh expanded metal	B34	$1,210
☐	Pneumatic Hopper Cover		$4,210
☐	Rear Fenders for Single Rear Tire	B38	$670
☐	Rear Fenders for Tandem Rear Tires	B38	$1,120
☐	Continuously Welded Body Interior		$400
☐	20 lb. Fire Extinguisher with Bracket	B4	$500
☐	Tool Box (18” x 18” x 36”) - frame mounted - available on 30 and 32 yard bodies ONLY	B5	$810
☐	Tool Box (18” x 18” x 24”) - frame mounted - available on 24, 26, 30, and 32 yard bodies ONLY	B5	$765
☐	Tool Box (18” x 18” x 24”) - bumper mounted - available on 22, 26, 30 and 32 yard bodies ONLY	B6	$765
☐	Hydraulic Pressure Gauge Kit (shipped loose in cab)	B2	$305
☐	Hydraulic Oil Tank Heater - 500 watts		$1,185
☐	Oil Temperature Gauge Kit		$670
☐	Dual High Pressure Filter Kit	B3	$1,795
☐	Rear Caution Decal	B24	$285
☐	Extended Tailgate Seal		$360
☐	Remote Lubrication System with Manifold for Packer		STD
☐	Broom & Shovel Rack Located on the street side hopper		$290
☐	Sign Frame - J-Channel - 36” x 48”	B43	$380
☐	Sign Frame - J-Channel - 36” x 72”	B43	$455
☐	Sign Frame - J-Channel - 48” x 72” - not available on 16 and 20 yd. bodies	B43	$485
☐	Sign Frame - Roadway - 31.5” x 95.5” - only available on 30 and 32 yd. bodies	B44	$2,100
☐	Sign Frame - Structural Channel - 48” x 96” - only available on 30 and 32 yd. bodies	B45	$610
☐	Rear Tow Hooks		$445
☐	Spill Kit		$445
☐	Hydraulic Oil Tank Quick Disconnect Kit - For use with filter buggy		$935
☐	Hydraulic Tank Low Oil Level Warning Kit		$1,080

Effective December 1, 2017 Liberty Sales Order Form

Camera Systems

All camera systems are mounted with protective camera brackets and twin tailgate flood lights

CAMERA MONITOR LOCATION WILL BE CAB ROOF MOUNTED

Swivel monitor bracket will be provided for dual drive chassis

360 ° Camera Systems and Options

☐	360 Degree Camera Package - Includes 360 degree camera system (4 camera), DVR capability, Dash Camera, Operator Facing Camera, and Hopper Camera.		$10,260
☐	360 Base Camera System - Includes 360 (4 Camera System) for Monitoring Only		$8,440
☐	Add DVR for Recording Function - Includes Dash Camera for Road Facing View		$1,680
☐	Add Operator Facing Camera for Operator Monitoring		$385
☐	Add Hopper Camera		$1,035

3rd Eye Camera Systems

☐	3rd Eye Single Camera with LCD Color Monitor		$1,580
☐	3rd Eye Double Camera with LCD Color Monitor		$2,030
☐	3rd Eye Triple Camera with LCD Color Monitor		$2,475
	Camera 1 Location - Mounted on Tailgate Facing Rear		
	Camera 2 Location - ☐ Left Hand Side Cab - ☐ Right Hand Side Cab - ☐ Hopper - ☐ Grabber		
	Camera 3 Location - ☐ Left Hand Side Cab - ☐ Right Hand Side Cab - ☐ Hopper - ☐ Grabber		

AWTI Radar Systems

☐	### AWTI Radar System used in conjunction with 3rd Eye Cameras - Must Select Camera from above 3rd Eye Camera Options		$2,220

* Other radar systmes may be available via Custom Option Request *

Load Cell Scale Systems

☐	Heil Optimum Payload System (HOPS) using Air-Weigh Axle Scales	CE20	$8,740
☐	Air-Weigh Axle Scale System without Interlock	CE20	$8,155

Auxiliary Axles and Tires

* NOTE: All axles MUST BE installed with tires so chassis can be re-certified to new GAWR and GVWR ratings

☐	Watson & Chalin Self Steering Axle: 13,500 pound capacity, hub piloted or 20" spoke wheel hubs, automatic slack adjusters, type 16 air chambers, steering stabilizer kit and reverse lift kit - for pusher applications		$14,175
☐	Watson & Chalin Rigid Axle: 20,000 pound capacity, hub piloted or 20" spoke wheel hubs, 30/30 brake chambers, automatic slack adjusters, 1,300 cubic inch air tank and regulator kit - for pusher applications		$11,150
☐	Tag Axle Spill Shield - Prevents debris from collecting on the tag axle - If applicable with body chassis combination		$310

* Note: All auxiliary applications must be approved by Heil prior to order acceptance

Auxiliary Axle Tire Options

☐	255/70R-22.5 - load range H, 5,510 pound single max load at 120 psi with rim - 2 tires installed		$2,240
☐	275/70R-22.5 - load range H, 7,000 pound single max load at 120 psi with rim - 2 tires installed		$2,835
☐	11 R-22.5 - load range H, 6,610 pound single max load at 120 psi with rim - 2 tires installed		$2,390

CNG Installation - Top of Body Installation

☐	CNG Installation Charge - Includes brackets, hardware, and mounting of CNG system		$5,625

Extended Complete Body Warranty Options

☐	Two (2) Year (Months 13-24) (Maximum 4,000 hrs. of Operation) Complete Heil Body Warranty		$2,640
☐	Three (3) Year (Months 13-36) (Maximum 6,000 hrs. of Operation) Complete Heil Body Warranty		$8,195
☐	Four (4) Year (Months 13-48) (Maximum 8,000 hrs. of Operation) Complete Heil Body Warranty		$12,255
☐	Five (5) Year (Months 13-60) (Maximum 10,000 hrs. of Operation) Complete Heil Body Warranty		$16,355

Extended Cylinder Warranty Options

☐	Two (2) Year (Months 13-24) (Maximum 4,000 hrs. of Operation) All Cylinder Warranty -		$2,950
☐	Three (3) Year (Months 13-36) (Maximum 6,000 hrs. of Operation) All Cylinder Warranty -		$5,830
☐	Four (4) Year (Months 13-48) (Maximum 8,000 hrs. of Operation) All Cylinder Warranty -		$8,725
☐	Five (5) Year) (Months 13-60) (Maximum 10,000 hrs. of Operation) All Cylinder Warranty-		$11,050

Paint Options

NOTE: LIST PAINT CODES ON PAINT DIAGRAM

☐	Customized Paint Color - Paint Color Code NOT included in the Color Smart Brochure		$390
☐	Customized Lift Paint - Any color other than Visibility Yellow (Standard)		$325
☐	Two Tone Paint		$1,485
☐	Paint Striping - first stripe		$1,250
☐	Paint Striping - each additional stripe		$695
☐	Metallic Paint		$5,000
☐	Clear coat Finish		$1,735
☐	Anti-Graffiti Clear coat Finish		$2,500
☐	Prime Paint Only - deduct		($1,220)

Effective December 1, 2017 Liberty Sales Order Form

TOTALS			
	Total from Options Above (MSRP)		**$0**
	Additional Options (Custom's, Chassis Mods, Etc.) Total		
	Subtotal		**$0**
	Dealer Discount (%)	**0%**	**$0**
	Dealer Net Price		**$0**
	Additional Discount (SPR)		
	Freight		
	Total Price per Unit		**$0**

Liberty™

Paint Stripe & Accessories Requirements

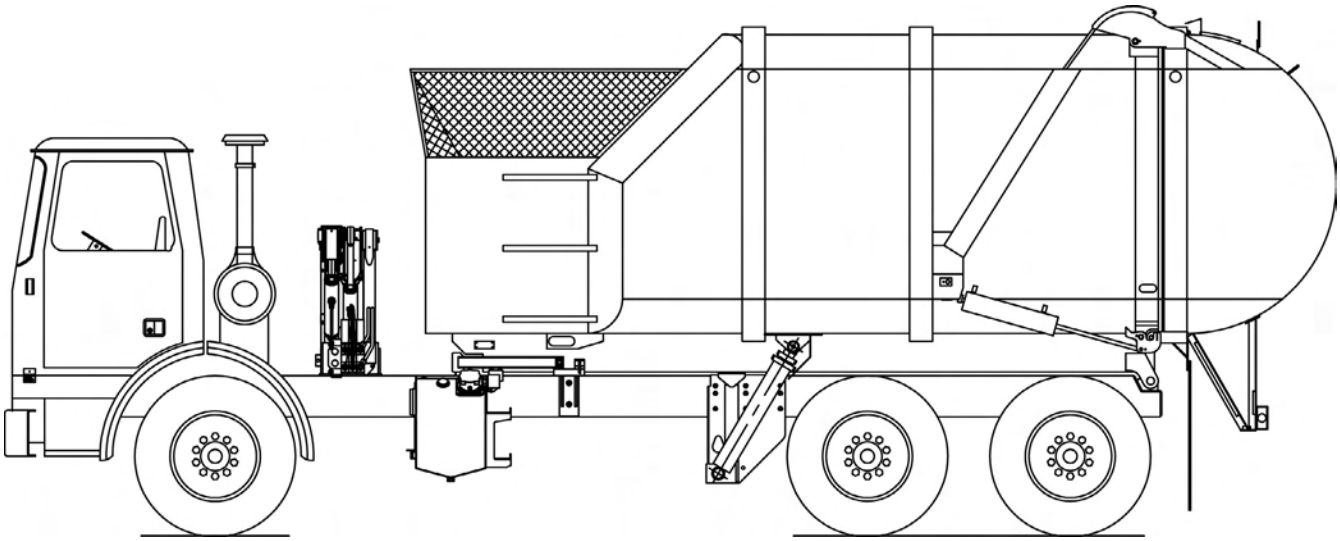

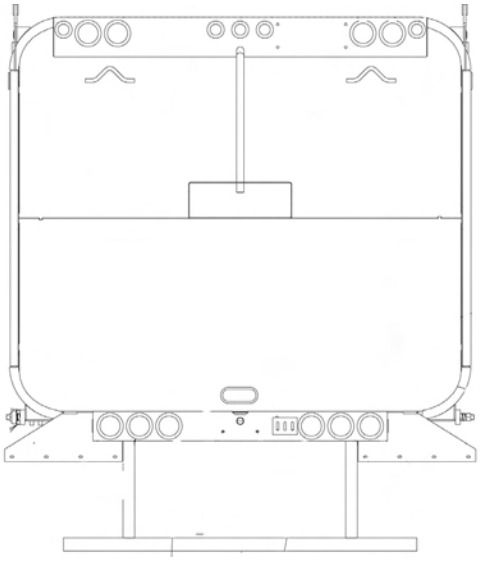

Paint and options layout detail
Use this form to describe paint schemes
Be specific about dimensions and details

Sales Order #		Submitted by	
Customer			
Paint Color 1			
Paint Color 2			
Paint Color 3			
Chassis Make			
Chassis Model			
Wheelbase			
Body Size		Approved by	

MultiPack®

High-Performance Rear Automated Side Loader

Standard Equipment Features included in Base Price

- 5.2 yd ³ front hopper
- 3.94yd ³ rear hopper
- 108 in. lift reach
- Lift capacity up to 800 lbs.
- Python Lift - 2 year limited structural warranty
- DuraPack® 5000 tailgate
- Street side access door with step and grab
- Under hopper liquid sump with 2 clean-out doors and steel rake
- Tailgate service props
- Tailgate turnbuckle kit
- O.I.G.A.I front mount tandem vane pump system
- Cushioned up and down chrome-plated rods
- Chassis frame-mounted oil tank with level / temperature gauge and suction shut-off valve
- 3-micron return line filter with magnetic trap and in-cab filter bypass monitor
- 100-micron suction line strainer
- Abrasion-resistant hydraulic hoses
- In-cab packing controls, electric/air
- In-cab lift controls, air/electric, joystick
- In-cab eject controls, electric/air
- In-cab tailgate controls, air
- Cortex Controller™ with InSight™ diagnostic display
- In-cab function and indicator lights
- Select-O-Pack
- AutoLift™
- Arm rest
- Lift reach warning
- Backup alarm
- Backup and license plate lights
- LED center mounted brake light
- LED duplicate high and low mount stop, turn, and tail lights
- LED mid-body turn signals
- LED FMVSS #108 clearance lights and reflectors
- ICC reflective tape
- Rear underride guard
- Rear camera bracket and flood lights - reverse activated
- Body undercoating
- Customer's choice of one color finish paint from ColorSmart brochure
- Standard 1-year (2,000 hours of operation) warranty
- ANSI Z 245.1-2012 Compliant
- Cavity coat and joint sealer
- Remote packer lube kit
- 5 lb. In-Cab Fire Extinguisher
- Safety Triangle
- Severe duty packer wear bar kit - hopper only

Effective December 1, 2017 MultiPack Sales Order Form

Base Units MultiPack			
☐	24 cubic yard		$160,215
	EJECT		
Hopper Size		Front	5.2 yd³
		Rear	3.9 yd³
CHASSIS MUST COMFORM WITH HEIL'S MOST CURRENT CHASSIS SPECIFICATIONS AT WWW.HEIL.COM			
* NOTE: Red numbers reference Option Photo Index			
Mounting Options			
☐	Full Factory Mount		$5,915
☐	Mount at Dealer Destination		$735
Grabber and Lift Options			
☐	TriCuff Grabber - handles a variety of 30 to 110 gallon square, rectangular and round semi-automated and automated barrels	MG16	$1,315
☐	TriCuff Grip Rite Grabber - handles a variety of 30 to 110 gallon square, rectangular and round semi-automated and automated barrels. No Spring Tensioner		$1,315
☐	Belt Grabbers with Spring Loaded Inner Arm - to accommodate 60/90 gallon round automated barrels	MG15	$1,315
☐	Universal Belt Grabbers with Spring Loaded Inner Arm - to accommodate 90 - 300 gallon round automated barrels	MG18	$1,315
☐	Changeable Spring Steel Grabbers - for 60 and 90 gallon round automated barrels with 26" - 27" grab diameter	MG17	$1,315
☐	Changeable Spring Steel Grabbers - for 300 gallon round automated barrels with 41" - 43" grab diameter	MG17	$1,315
☐	Grabber Interlock Kit - prevents lift raise with grabbers in open position and grabbers opening in the lift raised position		$1,190
Grabber storage bracket supplied at no charge when any TWO sets of spring steel grabbers are ordered			
Reduces hopper capacity by 1.2 yd3			
Power Take Off / Pump Options			
☐	Operate-in-gear-at-idle (OIGAI) Front Mount Vane Pump		STD
Lift Controls, Options and Accessories			
☐	Remote Lift Controls - air toggles - mounted under seat on right hand side	CE9	$1,540
☐	Additional Joystick Control for Lift - mounted in-cab	CE10	$1,785
Lighting and Electrical Accessories			
☐	Front Hopper and Lift Work Light Kit - two lights - in-cab switch	L11	$475
☐	Tailgate Hopper Work Light Kit - in-cab switch	L1	$350
☐	Multi-Function (SMART) LED Strobe / Turn Lamps - includes LED light package for entire unit	L10	$610
☐	Dual Work Lights Outside of Tailgate Hopper		$470
☐	Body Side Backing Assist Lights - reverse activated	L6	$505
☐	Strobe Light, Amber - upper LH corner of tailgate - in-cab switch	L4	$670
☐	Strobe Light, Amber - in-cab switch - Front of Body	L4	$670
☐	Dual Front Oval LED Strobes		$770
☐	Left Hand Buzzer Kit	CE1	$170
Container Handling / Cart Tipper Options			
☐	12,000 Pound Line Pull Drum Winch with Control Kit *	MG9	$5,835
☐	15,000 lb. Line Pull Reeving Cylinder with Control Kit - non-recessed	MG3	$6,480
☐	Adjustable Roll Bar with Control Kit	MG4	$4,120
☐	Arm Mechanism with Control Kit	MG5	$5,840
All of the above mechanisms require the latch kit below			
Riding steps cannot be supplied with Arm Mechanism option			
☐	Lip and Latch Kit	MG6	$1,280
Latch kit with vertical slots available for arm mechanism			
☐	Single Control Valve Section with Control Handle	MG2	$1,325
☐	Double Control Valve Section with Control Handles	MG2	$2,030

Effective December 1, 2017 MultiPack Sales Order Form

Body Options			
☐	Front Hopper and Body Floor Liner (3/16" - 150,000 psi)		$1,375
☐	3" Hopper Drain Valve	B20	$345
☐	Mud Guards - steel - mounted ahead of rear tires	B8	$325
☐	Mud Flaps - anti-sail / anti-splash - ahead of rear tires	B7	$225
☐	Manual Hopper Cover - mesh expanded metal	B33	$1,210
☐	Manual Hopper Cover for use with Hopper Hood		$1,210
☐	Hopper Hood - not available with 300 gallon grabbers	B35	$1,975
☐	20 lb. Fire Extinguisher with Bracket	B4	$500
☐	Dual 20 lb. Fire Extinguishers with Bracket		$995
☐	Tool Box (18" x 18" x 36") - frame mounted	B5	$815
☐	Tool Box (18" x 18" x 24") - frame mounted	B6	$765
☐	Hydraulic Pressure Gauge Kit (shipped loose in cab)	B2	$305
☐	Hydraulic Oil Tank Heater - 500 watts		$1,185
☐	Hydraulic Tank Low Oil Level Warning Kit		$1,080
☐	Dual High Pressure Filter Kit	B3	$1,795
☐	DP 5000 H.D. Contractors Package (includes 1/4" hopper floor, 3/16" hopper front face liner and tailgate spill troughs)		$1,510
☐	Tailgate Side Spill Troughs	B13	$715
☐	Hydraulic Oil Tank Quick Disconnect Kit - For use with filter buggy		$820
☐	Spill Kit		$340
☐	Fender Extension Kit		$725
☐	Sump Chutes		$465
☐	Infinity Series Packer/Eject Cylinders with scrapers and hardened rods to 50 HRC - Includes Five (5) Year Packer/Eject Cylinder Only Warranty that covers dents and dings (This Option is Required if purchasing extended warranty's below)		$3,055

Note: Hopper hood may not be ordered in conjunction with a sliding top door

Camera Systems

All camera systems are mounted with protective camera brackets and twin tailgate flood lights

CAMERA MONITOR LOCATION WILL BE CAB ROOF MOUNTED

Swivel monitor bracket will be provided for dual drive chassis

360 ° Camera Systems and Options			
☐	360 Degree Camera Package - Includes 360 degree camera system (4 camera), DVR capability, Dash Camera, Operator Facing Camera, Hopper Camera, and WIFI Capability		$10,260
☐	360 Base Camera System - Includes 360 (4 Camera System) for Monitoring Only		$8,440
☐	Add DVR for Recording Function - Includes Dash Camera for Road Facing View		$1,680
☐	Add Operator Facing Camera for Operator Monitoring		$385
☐	Add Hopper Camera		$1,035
3rd Eye Camera Systems			
☐	3rd Eye Single Camera with LCD Color Monitor		$1,580
☐	3rd Eye Double Camera with LCD Color Monitor		$2,030
☐	3rd Eye Triple Camera with LCD Color Monitor		$2,475
	Camera 1 Location - Mounted on Tailgate Facing Rear		
	Camera 2 Location - Choose: ☐ Left Hand Side Cab - ☐ Right Hand Side Cab - ☐ Hopper		
	Camera 3 Location - Choose: ☐ Left Hand Side Cab - ☐ Right Hand Side Cab - ☐ Hopper		
Load Cell Scale Systems			
☐	Heil Optimum Payload System (HOPS) using Air-Weigh Axle Scales	CE20	$8,740
☐	Air-Weigh Axle Scale System without Interlock	CE20	$8,155

Auxiliary Axles and Tires

* NOTE: All axles MUST BE installed with tires so chassis can be re-certified to new GAWR and GVWR ratings

☐	Watson & Chalin Rigid Axle: 20,000 pound capacity, hub piloted or 20" spoke wheel hubs, 30/30 brake chambers, automatic slack adjusters, 1,300 cubic inch air tank and regulator kit - for pusher applications		$10,835

Auxiliary Axle Tire Options

* Note: All auxiliary applications must be approved by Heil prior to order acceptance

☐	255/70R-22.5 - load range H, 5,510 pound single max load at 120 psi with rim - 2 tires installed		$2,240
☐	275/70R-22.5 - load range H, 7,000 pound single max load at 120 psi with rim - 2 tires installed		$2,835
☐	11 R-22.5 - load range H, 6,610 pound single max load at 120 psi with rim - 2 tires installed		$2,390

CNG Installation - Top of Body Installation

☐	CNG Installation Charge - Includes brackets, hardware, and mounting of CNG system		$5,625

Effective December 1, 2017 MultiPack Sales Order Form

Extended Complete Body Warranty Options			
☐	Two (2) Year (Months 13-24) (Maximum 4,000 hrs. of Operation) Complete Heil Body Warranty Requires additional purchase of Infinity packer/eject cylinders from above		$2,640
☐	Three (3) Year (Months 13-36) (Maximum 6,000 hrs. of Operation) Complete Heil Body & Lift Warranty Requires additional purchase of Infinity packer/eject cylinders from above		$8,195
☐	Four (4) Year (Months 13-48) (Maximum 8,000 hrs. of Operation) Complete Heil Body & Lift Warranty Requires additional purchase of Infinity packer/eject cylinders from above		$12,255
☐	Five (5) Year (Months 13-60) (Maximum 10,000 hrs. of Operation) Complete Heil Body & Lift Warranty Requires additional purchase of Infinity packer/eject cylinders from above		$16,355
Extended Cylinder Warranty Options			
☐	Two (2) Year (Months 13-24) (Maximum 4,000 hrs. of Operation) All other Non-Infinity Cylinder Warranty - Requires additional purchase of Infinity packer/eject cylinders from above		$2,950
☐	Three (3) Year (Months 13-36) (Maximum 6,000 hrs. of Operation) All other Non-Infinity Cylinder Warranty - Requires additional purchase of Infinity packer/eject cylinders from above		$5,830
☐	Four (4) Year (Months 13-48) (Maximum 8,000 hrs. of Operation) All other Non-Infinity Cylinder Warranty - Requires additional purchase of Infinity packer/eject cylinders from above		$8,725
☐	Five (5) Year (Maximum 10,000 hrs. of Operation) All other Non-Infinity Cylinder Warranty - Requires purchase of Infinity packer or eject Cylinders from above		$11,050
Paint Options			
NOTE: LIST PAINT CODES ON PAINT DIAGRAM			
☐	Customized Paint Color - Paint Color Code NOT included in the Color Smart Brochure		$390
☐	Customized Lift Paint - Any color other than Visibility Yellow (Standard)		$325
☐	Two Tone Paint		$1,485
☐	Paint Striping - first stripe		$1,250
☐	Paint Striping - each additional stripe		$695
☐	Metallic Paint		$5,000
☐	Clear coat Finish		$1,735
☐	Anti-Graffiti Clear coat Finish		$2,500
☐	Prime Paint Only - deduct		($1,220)
TOTALS			
	Total from Options Above (MSRP)		**$0**
	Additional Options (Custom's, Chassis Mods, Etc.) Total		
	Subtotal		**$0**
	Dealer Discount (%)	**0%**	**$0**
	Dealer Net Price		**$0**
	Additional Discount (SPR)		
	Freight		
	Total Price per Unit		**$0**

MULTIPACK®

Paint Stripe & Accessories Requirements

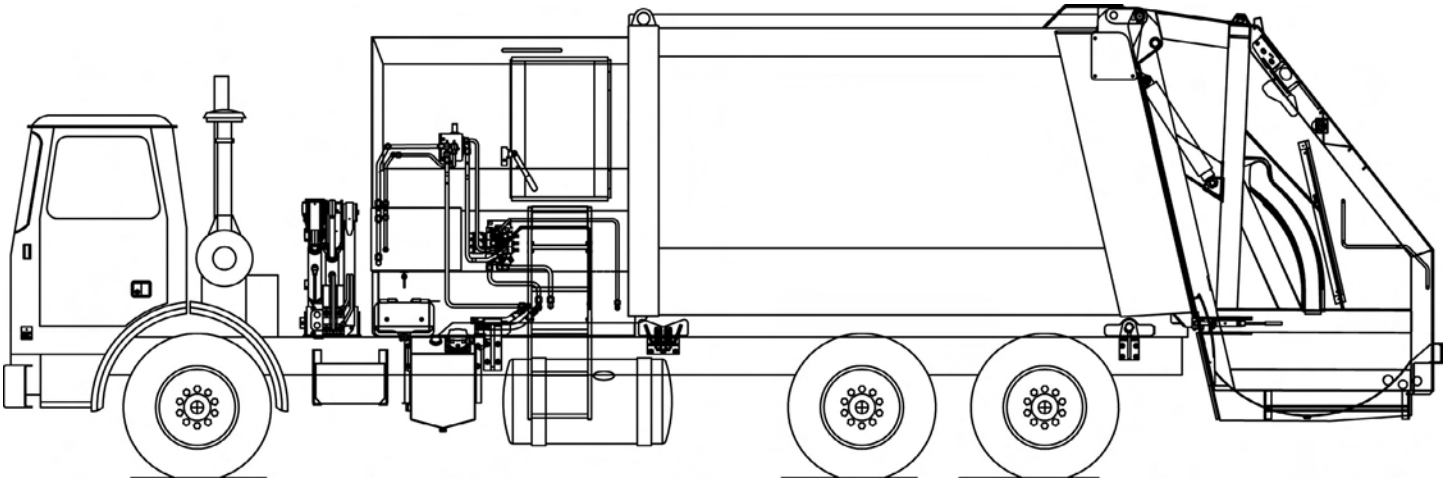

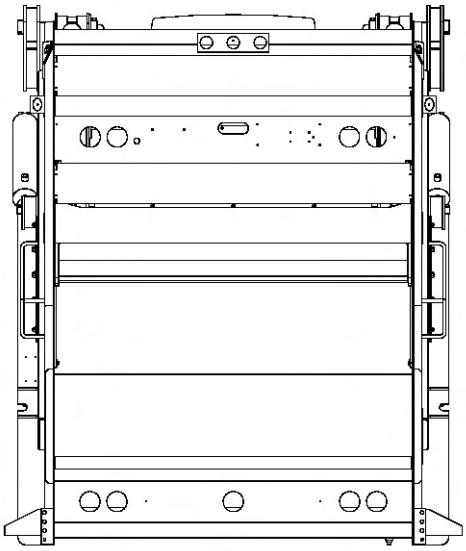

PAINT AND OPTIONS LAYOUT DETAIL
USE THIS FORM TO DESCRIBE PAINT SCHEMES
BE SPECIFIC ABOUT DIMENSIONS AND DETAILS

Sales Order #		Submitted by	
Customer			
Paint Color 1			
Paint Color 2			
Paint Color 3			
Chassis Make			
Chassis Model			
Wheelbase			
Body Size		Approved by	

Rapid Rail®

Continuous–Pack Automated Side Loader

Standard Equipment Features included in Base Price

- 3.0yd^3 hopper (self-cleaning)
- 96 in. lift reach
- Lift capacity up to 1600 lbs.
- Body service props
- Tailgate service props
- Fully automatic tailgate latches
- Grease zerks - for entire system only
- O.I.G.A.I. front mount tandem vane pump system
- Lift cylinders cushioned up and dow n w ith chrome plated rods
- Chassis frame-mounted oil tank w ith level/temperature gauge and oil suction shut-off valve
- 3-micron return line filter w ith magnetic trap and in-cab filter bypass monitor
- 100-micron suction line strainer
- Abrasion-resistant hydraulic hoses
- In-cab packing controls, electric
- Electric in-cab lift controls, rocker style
- Electri in-cab hoist controls
- Cortex Controller™ w ith In-Sight™ dianostic display
- In-cab tailgate controls, electric
- In-cab function and indicator lights
- Lift reach w arning
- Backup alarm
- Backup and license plate lights
- LED Center mounted brake light
- LED Duplicate high and low mount stop, turn, and tail lights
- LED Mid-body turn signals
- LED FMVSS #108 clearance lights and reflectors
- ICC reflective tape
- Rear mud flaps - anti-sail/anti-splash
- Rear underride guard
- Rear camera bracket and flood lights - reverse activated
- Customer's choice of one color finish paint from ColorSmart brochure
- Standard 1-year (2,000 hours of operator) w arranty
- ANSI Z 245.1-2012 Compliant
- Cavity coat and joint sealer
- Inside-body front closure
- Outside mounted upper packer lube line
- Safety Triangle
- 5 lb. In-Cab Fire Extinguisher
- 6 roller carriage
- Heavy duty packet paddle with liquid containment shaft seals
- Observation ladder with liquid containment shaft seals

Environmental Solutions Group
A DOVER COMPANY

Effective December 1, 2017 Rapid Rail Sales Order Form

Base Units Rapid Rail - DUMP ONLY			
☐	16 cubic yard		$108,845
☐	20 cubic yard		$110,900
☐	22 cubic yard		$111,925
☐	24 cubic yard		$112,960
☐	26 cubic yard		$114,000
☐	30 cubic yard		$116,050
☐	32 cubic yard		$118,310
Hopper Size			3 yd³
CHASSIS MUST COMFORM WITH HEIL'S MOST CURRENT CHASSIS SPECIFICATIONS AT WWW.HEIL.COM			
* NOTE: Red numbers reference Option Photo Index			
Mounting Options			
☐	Full Factory Mount		$5,915
☐	Mount at Dealer Destination		$735
Grabber and Lift Options			
☐	TriCuff Grabber - handles a variety of 30 to 110 gallon square, rectangular and round semi-automated and automated barrels	MG16	$1,315
☐	TriCuff Grip Rite Grabber - handles a variety of 30 to 110 gallon square, rectangular and round semi-automated and automated barrels. No Spring Tensioner		$1,315
☐	Belt Grabbers with Spring Loaded Inner Arm - to accommodate 60/90 gallon round automated barrels	MG15	$1,315
☐	Universal Belt Grabbers with Spring Loaded Inner Arm - to accommodate 90 - 300 * gallon round automated barrels	MG18	$1,315
☐	Changeable Spring Steel Grabbers - for 60 and 90 gallon round automated barrels with 26" - 27" grab diameter	MG17	$1,315
☐	Changeable Spring Steel Grabbers - for 300 * gallon round automated barrels with 41" - 43" grab diameter	MG17	$1,315
Grabber storage bracket supplied at no charge when any TWO sets of spring steel grabbers are ordered			
Not available on 16 yard bodies			
Power Take Off / Pump Options			
☐	Operate-in-gear-at-idle (OIGAI) Front Mount Tandem Vane Pump		STD
☐	Operate-in-Neutral Front Mount Tandem Vane Pump		$0
☐	Operate-in-gear-at-idle (OIGAI) Remote Mount Tandem Vane Pump with Transmission Driven, Constant Duty PTO		$2,950
☐	Operate-in-Neutral Direct Mount Vane Pump with Hot Shift PTO		$2,950
☐	890 Hot Shift PTO with Tandem Vane Pump		$3,735
☐	897 Constant Duty PTO with Tandem Vane Pump		$3,735
Lighting and Electrical Accessories			
☐	Hopper and Lift Work Light Kit - two lights - in-cab switch	L11	$475
☐	Multi-Function (SMART) LED Strobe / Turn Lamps - includes LED light package for entire unit	L10	$610
☐	Body Side Backing Assist Lights - reverse activated	L6	$505
☐	Dual Flashing 7" Amber LED Lights on Tailgate - mounted top	L7	$1,055
☐	Strobe Light, Amber - in-cab switch - mounted mid-tailgate	L4	$670
☐	Strobe Light, Amber - in-cab switch, pump on, and reverse activated - mounted mid-tailgate	L4	$670
☐	Dual Strobe Lights, Amber - in-cab switch - mounted mid-tailgate	L4	$965
Lift Controls, Options and Accessories			
☐	Lift Activated Force to Neutral System (requires Allison World transmission package 168 or 170 - see bulletin #341) - applies to non-O.I.G.A.I. pump systems only		$1,020
☐	Lift Cycle Counter	CE8	$645
☐	Joystick Control with Rocker Switch for Lift Only in addition to standard 4-button rocker switch controls	CE13	$1,215
☐	In-Cab Remote Rocker Switch Control Kit for Lift Only	CE15	$1,215
☐	Lift Feathering Kit - for O.I.G.A.I. only		$805
Body Options			

☐	Reinforced Tailgate Hinge		$510
☐	Heavy Duty Overlay Package - hopper floor and sides, 48" into body (3/16" - 100,000 psi)		$3,265
☐	3" Hopper Drain Valve	B20	$345
☐	Mud Guards - steel - mounted ahead of rear tires	B8	$330
☐	Mud Flaps - anti-sail / anti-splash - ahead of rear tires	B7	$225
☐	Manual Hopper Cover - mesh expanded metal	B34	$1,210
☐	Pneumatic Hopper Cover		$4,210
☐	Solid Hopper Upper Extension - available on 30 and 32 yard bodies ONLY	B37	$705
☐	Rear Fenders for Single Rear Tire	B38	$670
☐	Rear Fenders for Tandem Rear Tires	B38	$1,120
☐	Continuously Welded Body Interior		$400
☐	20 lb. Fire Extinguisher with Bracket	B4	$500
☐	Tool Box (18" x 18" x 36") - frame mounted - available on 30 and 32 yard bodies ONLY	B5	$810
☐	Tool Box (18" x 18" x 24") - frame mounted - available on 24, 26, 30, and 32 yard bodies ONLY	B5	$765
☐	Tool Box (18" x 18" x 24") - bumper mounted - available on 22, 26, 30 and 32 yard bodies ONLY	B6	$765
☐	Hydraulic Pressure Gauge Kit (shipped loose in cab)	B2	$305
☐	Hydraulic Oil Tank Heater - 500 watts		$1,185
☐	Oil Temperature Gauge Kit		$670
☐	Dual High Pressure Filter Kit	B3	$1,795
☐	Extended Tailgate Seal		$360
☐	Remote Lubrication System with Manifold for Packer		$0
☐	Broom & Shovel Rack Located on the street side hopper		$290
☐	Sign Frame - J-Channel - 36" x 48"	B43	$380
☐	Sign Frame - J-Channel - 36" x 72"	B43	$455
☐	Sign Frame - J-Channel - 48" x 72" - not available on 16 and 20 yd. bodies	B43	$485
☐	Sign Frame - Roadway - 31.5" x 95.5" - only available on 30 and 32 yd. bodies	B44	$2,100
☐	Sign Frame - Structural Channel - 48" x 96" - only available on 30 and 32 yd. bodies	B45	$610
☐	Rear Tow Hooks		$445
☐	Rear Caution Decal	B24	$285
☐	Spill Kit		$445
☐	Battery Box mounted behind grabbers		$935
☐	Hydraulic Oil Tank Quick Disconnect Kit - For use with filter buggy		$815
☐	Hydraulic Tank Low Oil Level Warning Kit		$1,080
	Organics Option		
☐	Reduced Pack Cycle Programming for Organics Collection		$0
☐	Extended Tailgate Seal		$360
	Camera Systems		
	All camera systems are mounted with protective camera brackets and twin tailgate flood lights		
	CAMERA MONITOR LOCATION WILL BE CAB ROOF MOUNTED		
	Swivel monitor bracket will be provided for dual drive chassis		
	360 ° Camera Systems and Options		
☐	360 Degree Camera Package - Includes 360 degree camera system (4 camera), DVR capability, Dash Camera, Operator Facing Camera, and Hopper Camera.		$10,260
☐	360 Base Camera System - Includes 360 (4 Camera System) for Monitoring Only		$8,440
☐	Add DVR for Recording Function - Includes Dash Camera for Road Facing View		$1,680
☐	Add Operator Facing Camera for Operator Monitoring		$385
☐	Add Hopper Camera		$1,035
	3rd Eye Camera Systems		
☐	3rd Eye Single Camera with LCD Color Monitor		$1,580
☐	3rd Eye Double Camera with LCD Color Monitor		$2,030
☐	3rd Eye Triple Camera with LCD Color Monitor		$2,475
	Camera 1 Location - Mounted on Tailgate Facing Rear		
	Camera 2 Location - ☐ Left Hand Side Cab - ☐ Right Hand Side Cab - ☐ lopper - ☐ Grabber		
	Camera 3 Location - ☐ Left Hand Side Cab - ☐ Right Hand Side Cab - ☐ lopper - ☐ Grabber		
	AWTI Radar Systems		
☐	AWTI Radar System used in conjunction with 3rd Eye Cameras - Must Select Camera from above 3rd Eye Camera Options		$2,220
	* Other radar systmes may be available via Custom Option Request *		
	Load Cell Scale Systems		
☐	Heil Optimum Payload System (HOPS) using Air-Weigh Axle Scales	CE20	$8,740
☐	Air-Weigh Axle Scale System without Interlock	CE20	$8,155

Effective December 1, 2017 Rapid Rail Sales Order Form

Auxiliary Axles and Tires			
* NOTE: All axles MUST BE installed with tires so chassis can be re-certified to new GAWR and GVWR ratings			
☐	Watson & Chalin Self Steering Axle: 13,500 pound capacity, hub piloted or 20" spoke wheel hubs, automatic slack adjusters, type 16 air chambers, steering stabilizer kit and reverse lift kit - for pusher applications,		$14,175
☐	Watson & Chalin Rigid Axle: 20,000 pound capacity, hub piloted or 20" spoke wheel hubs, 30/30 brake chambers, automatic slack adjusters, 1,300 cubic inch air tank and regulator kit - for pusher applications		$11,150
* Note: All auxiliary applications must be approved by Heil prior to order acceptance			
Auxiliary Axle Tire Options			
☐	255/70R-22.5 - load range H, 5,510 pound single max load at 120 psi with rim - 2 tires installed		$2,240
☐	275/70R-22.5 - load range H, 7,000 pound single max load at 120 psi with rim - 2 tires installed		$2,835
☐	11 R-22.5 - load range H, 6,610 pound single max load at 120 psi with rim - 2 tires installed		$2,390
CNG Installation - Top of Body Installation			
☐	CNG Installation Charge - Includes brackets, hardware, and mounting of CNG system		$5,625
Extended Complete Body Warranty Options			
☐	Two (2) Year (Months 13-24) (Maximum 4,000 hrs. of Operation) Complete Heil Body Warranty		$4,100
☐	Three (3) Year (Months 13-36) (Maximum 6,000 hrs. of Operation) Complete Heil Body Warranty		$8,195
☐	Four (4) Year (Months 13-48) (Maximum 8,000 hrs. of Operation) Complete Heil Body Warranty		$12,255
☐	Five (5) Year (Months 13-60) (Maximum 10,000 hrs. of Operation) Complete Heil Body Warranty		$16,355
Extended Cylinder Warranty Options			
☐	Two (2) Year (Months 13-24) (Maximum 4,000 hrs. of Operation) All Cylinder Warranty -		$2,950
☐	Three (3) Year (Months 13-36) (Maximum 6,000 hrs. of Operation) All Cylinder Warranty -		$5,830
☐	Four (4) Year (Months 13-48) (Maximum 8,000 hrs. of Operation) All Cylinder Warranty -		$8,725
☐	Five (5) Year) (Months 13-60) (Maximum 10,000 hrs. of Operation) All Cylinder Warranty-		$11,050
Paint Options			
NOTE: LIST PAINT CODES ON PAINT DIAGRAM			
☐	Customized Paint Color - Paint Color Code NOT included in the Color Smart Brochure		$390
☐	Customized Lift Paint - Any color other than Visibility Yellow (Standard)		$325
☐	Two Tone Paint		$1,485
☐	Paint Striping - first stripe		$1,250
☐	Paint Striping - each additional stripe		$695
☐	Metallic Paint		$5,000
☐	Clear coat Finish		$1,735
☐	Anti-Graffiti Clear coat Finish		$2,500
☐	Prime Paint Only - deduct		($1,220)
TOTALS			
	Total from Options Above (MSRP)		**$0**
	Additional Options (Custom's, Chassis Mods, Etc.) Total		
	Subtotal		**$0**
	Dealer Discount (%)	**0%**	**$0**
	Dealer Net Price		**$0**
	Additional Discount (SPR)		
	Freight		
	Total Price per Unit		**$0**

RAPID RAIL®

Paint Stripe & Accessories Requirements

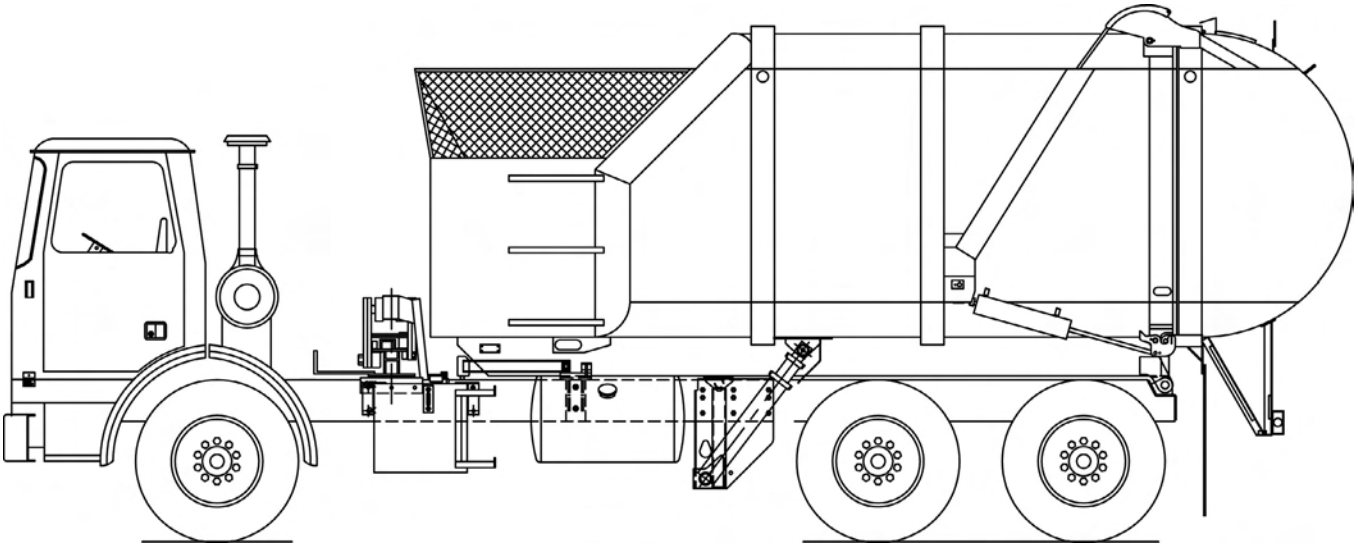

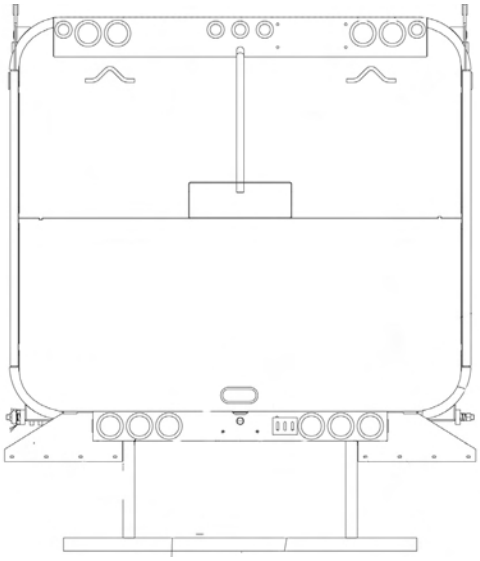

PAINT AND OPTIONS LAYOUT DETAIL
USE THIS FORM TO DESCRIBE PAINT SCHEMES
BE SPECIFIC ABOUT DIMENSIONS AND DETAILS

Sales Order #		Submitted by	
Customer			
Paint Color 1			
Paint Color 2			
Paint Color 3			
Chassis Make			
Chassis Model			
Wheelbase			
Body Size		Approved by	

DuraPack® 4060

Split-Body Rear Loader

Standard Equipment Features included in Base Price

- Bolt-on ANSI rear riding steps
- Street and curb side access doors w ith step and grab
- Tailgate service props
- Automatic tailgate latches
- Front mount tandem vane pump system
- Chrome plated telescopic sleeves
- Underbody oil tank w ith level / temperature gauge and oil suction shut-off valve
- Dual 3-micron return line filter w ith magnetic trap and in-cab filter bypass monitor
- 100-micron suction line strainer
- Fabric guard hose protection for all high pressure hoses
- Regenerative valve for fast packer cycle and reload times
- Dual side tailgate guzzer
- Neutral safety sw itch on automatic transmissions only
- Fully sealed, electric left and right side tailgate mounted packer controls
- 1/4" hopper floor liner
- 3/16"hopper side lienr
- Backup alarm
- Backup and license plate lights
- LED Center-mounted brake light
- LED Duplicate high and low mount stop, turn, and tail lights
- LED Mid-body turn signals
- LED FMVSS #108 clearance lights and reflectors
- ICC reflective tape
- Rear camera bracket and flood lights - reverse activated
- Dual emergency stop buttons - one on each side of the tailgate
- Cavity coat and joint sealer
- Body undercoating
- Customer's choice of one color finish paint from ColorSmart brochure
- Standard 1-year (2,000 hours of operation)
- ANSI Z 245.1-2012 Compliant
- Safety Triangle
- 5 lb. In-Cab Fire Extinguisher

Environmental Solutions Group
A DOVER COMPANY

Effective December 1, 2017 DuraPack 4060 Sales Order Form

Base Units DuraPack 4060			
☐	25 cubic yard		$174,570
	EJECT		
		Street	1.1 yd³
		Curb	1.5 yd³
CHASSIS MUST COMFORM WITH HEIL'S MOST CURRENT CHASSIS SPECIFICATIONS AT WWW.HEIL.COM			
* NOTE: Red numbers reference Option Photo Index			
Mounting Options			
☐	Full Factory Mount		$4,490
☐	Mount at Dealer Destination		$750
Power Take Off / Pump Options			
☐	Front Mount Tandem Vane Pump		STD
☐	Remote Mount Tandem Vane Pump with Transmission Driven, Constant Duty PTO		$2,950
☐	890 Hot Shift PTO with Tandem Vane Pump		$3,735
Lighting and Electrical Accessories			
☐	Hopper Work Lights Kit - two lights (1 per hopper) - switch on tailgate	L9	$470
☐	Multi-Function (SMART) LED Strobe / Turn Lamps - includes LED light package for entire unit	L10	$610
☐	LED Body Side Backing Assist Lights - reverse activated	L3	$770
☐	Strobe Light, Amber - in-cab switch - mounted front of body	L4	$670
☐	Strobe Light, Amber - in-cab switch - mounted upper tailgate	L4	$670
☐	Dual Front LED Oval Strobe Lights, Amber - in-cab switch		$785
☐	Municipal Lights with Dual 7" Amber incand. & Overhead Flood Light	L2	$1,440
Container Handling / Cart Tipper Options			
☐	Left hand Tailgate Single Cart Tipper Control Valve, Handle, Plumbing and Hose Kit	MG2	$2,020
☐	Right hand Tailgate Single Cart Tipper Control Valve, Handle, Plumbing and Hose Kit	MG2	$2,020
☐	Bayne Cart Tipper - Specify Model - Includes Controls, Valves, Plumbing, and Installation		See Bayne
☐	Customer Installed Left hand Tailgate Single Cart Tipper Kit - Bayne Bracket, Control Valve, Handle, Plumbing and Hose Kit	MG1	$2,325
☐	Customer Installed Right hand Tailgate Single Cart Tipper Kit - Bayne Bracket, Control Valve, Handle, Plumbing and Hose Kit	MG1	$2,325
	Specify Brand and Model		
CUSTOMER SUPPLIED CART TIPPERS ARE NOT ADMISSIBLE			
Body Options and Accessories			
☐	Mud Flaps - anti-sail / anti-splash - ahead of rear tires	B7	$225
☐	Hydraulic Oil Tank Heater - 500 watts		$1,185
☐	Hydraulic Pressure Gauge Kit (shipped loose in cab)	B2	$305
☐	Dual High Pressure Filter Kit	B3	$1,795
☐	20 lb. Fire Extinguisher with Bracket	B4	$495
☐	Tool Box (18" x 18" x 24") - frame mounted	B5	$765
☐	5 Gallon Cooler and Bracket - frame mounted	B12	$350
☐	Broom and Shovel Rack - mounted on tailgate		$215
☐	Manual Tailgate Controls on Street side and Curbside Tailgates		$1,420
☐	Oil Tank - Mounted on Front Head		$1,145
☐	Spill Kit		$340
☐	Hydraulic Oil Tank Quick Disconnect Kit - For use with filter buggy		$820
Camera Systems			
All camera systems are mounted with protective camera brackets and twin tailgate flood lights			
CAMERA MONITOR LOCATION WILL BE CAB ROOF MOUNTED			
Swivel monitor bracket will be provided for dual drive chassis			
360 ° Camera Systems and Options			
☐	360 Degree Camera Package - Includes 360 degree camera system (4 camera), DVR capability, Dash Camera, Operator Facing Camera, Hopper Camera, and WIFI Capability		$9,340
☐	360 Base Camera System - Includes 360 (4 Camera System) for Monitoring Only		$8,440
☐	Add DVR for Recording Function - Includes Dash Camera for Road Facing View		$1,680
☐	Add Operator Facing Camera for Operator Monitoring		$385
☐	Add Hopper Camera		$1,035

3rd Eye Camera Systems			
☐	3rd Eye Single Camera with LCD Color Monitor		$1,580
☐	3rd Eye Double Camera with LCD Color Monitor		$2,030
☐	3rd Eye Triple Camera with LCD Color Monitor		$2,475
	Camera 1 Location - Mounted on Tailgate Facing Rear		
	Camera 2 Location - Choose: ☐ Left Hand Side Cab - ☐ Right Hand Side Cab		
	Camera 3 Location - Choose: ☐ Left Hand Side Cab - ☐ Right Hand Side Cab		
Load Cell Scale Systems			
☐	Heil Optimum Payload System (HOPS) using Air-Weigh Axle Scales	CE20	$8,740
☐	Air-Weigh Axle Scale System without Interlock	CE20	$8,155

Effective December 1, 2017 DuraPack 4060 Sales Order Form

CNG Installation			
☐	CNG Installation Charge - Includes brackets, hardware, and mounting of CNG system		$5,625
Extended Complete Body Warranty Options			
☐	Two (2) Year (Months 13-24) (Maximum 4,000 hrs. of Operation) Complete Heil Body Warranty		$4,605
☐	Three (3) Year (Months 13-36) (Maximum 6,000 hrs. of Operation) Complete Heil Body Warranty		$9,255
☐	Four (4) Year (Months 13-48) (Maximum 8,000 hrs. of Operation) Complete Heil Body Warranty		$13,835
☐	Five (5) Year (Months 13-60) (Maximum 10,000 hrs. of Operation) Complete Heil Body Warranty		$18,470
Extended Cylinder Warranty Options			
☐	Two (2) Year (Months 13-24) (Maximum 4,000 hrs. of Operation) All Cylinder Warranty -		$1,790
☐	Three (3) Year (Months 13-36) (Maximum 6,000 hrs. of Operation) All Cylinder Warranty -		$3,230
☐	Four (4) Year (Months 13-48) (Maximum 8,000 hrs. of Operation) All Cylinder Warranty -		$5,315
☐	Five (5) Year) (Months 13-60) (Maximum 10,000 hrs. of Operation) All Cylinder Warranty-		$6,645
Paint Options			
NOTE: LIST PAINT CODES ON PAINT DIAGRAM			
☐	Customized Paint Color - Paint Color Code NOT included in the Color Smart Brochure		$390
☐	Two Tone Paint		$1,490
☐	Paint Striping - first stripe		$1,250
☐	Paint Striping - each additional stripe		$695
☐	Metallic Paint		$5,000
☐	Clear coat Finish		$1,735
☐	Anti-Graffiti Clear coat Finish		$2,495
☐	Prime Paint Only - deduct		($970)
TOTALS			
	Total from Options Above (MSRP)		**$0**
	Additional Options (Custom's, Chassis Mods, Etc.) Total		
	Subtotal		**$0**
	Dealer Discount (%)	**0%**	**$0**
	Dealer Net Price		**$0**
	Additional Discount (SPR)		**$0**
	Freight		
	Total Price per Unit		**$0**

DURAPACK® 4060

Paint Stripe & Accessories Requirements

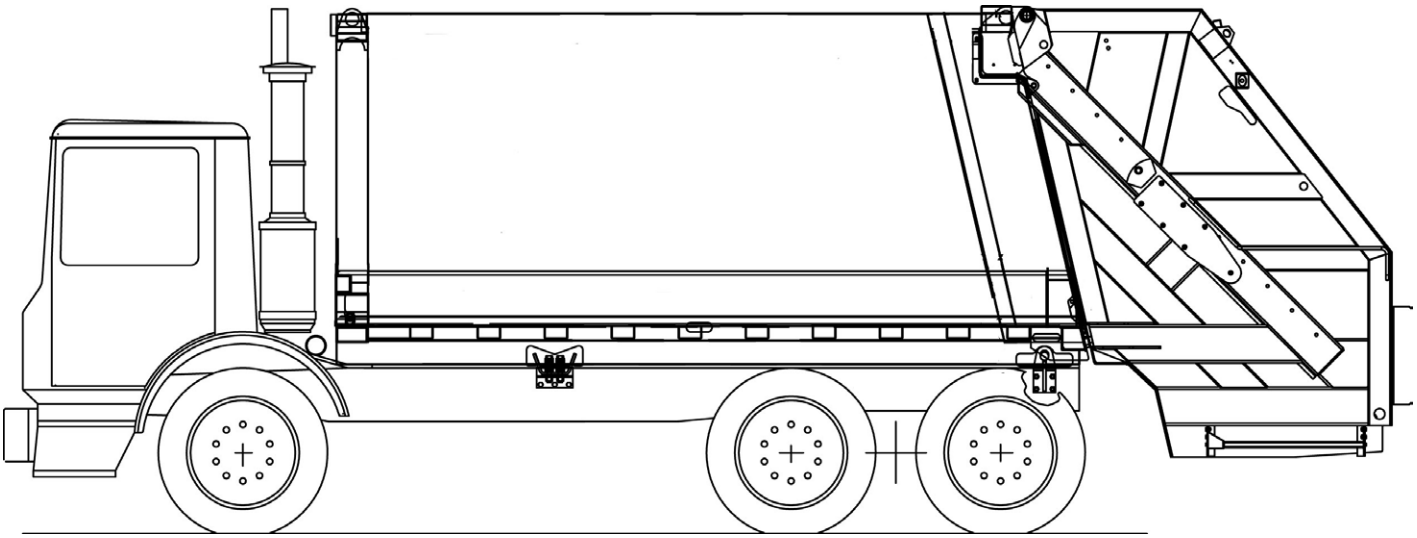

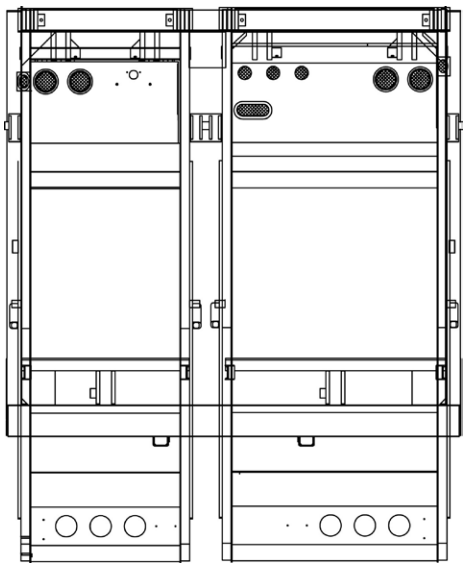

Paint and options layout detail
Use this form to describe paint schemes
Be specific about dimensions and details

Sales Order #		Submitted by	
Customer			
Paint Color 1			
Paint Color 2			
Paint Color 3			
Chassis Make			
Chassis Model			
Wheelbase			
Body Size		Approved by	

Options Photo Index

Body Options

Regenerative Valve B1

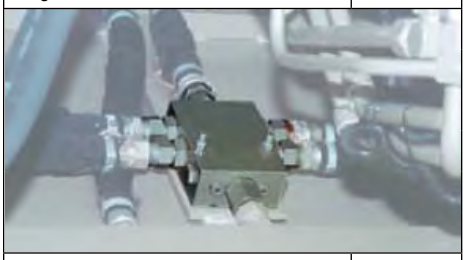

Hydraulic Pressure Gauge Kit B2

High-Pressure Filter Kit B3

20 lb. Fire Extinguisher with Bracket B4

Tool Box - Frame Mounted B5

Tool Box - Bumper Mounted B6

Mud Flaps B7

Mud Guards B8

Service Hoist Kit B9

Washout Tank B10

Return Line Check Valve B11

5-Gallon Igloo Cooler Bracket (Cooler not Shown) B12

Tailgate Side Spill Trough B13

In-Body Oil Tank B14

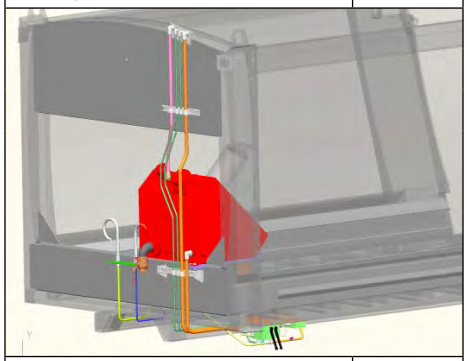

Broom and Shovel Rack (DuraPack® 5000) B15

Broom and Shovel Rack (PowerTrak® Commercial)	B16

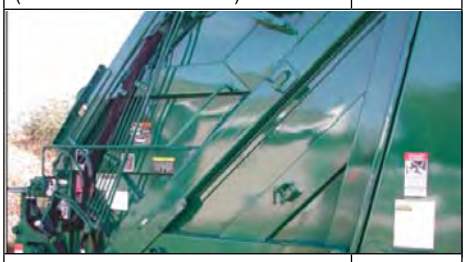

Slide Bearings - Bronze and Delrin	B18

Chassis Rail Closure Kit	B19

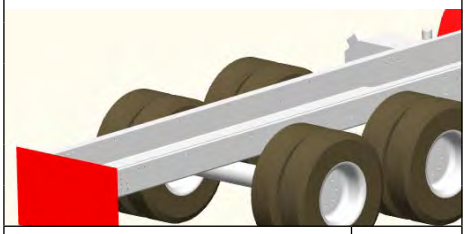

Body Drain Valve	B20

Body Side Access Door with Step and Grab	B21

Body Front Head Screen with Step and Grab	B22

4" Hopper Lip Extension (Shown with Optional Roll Bar and Latch Kit)	B23

Rear Caution Decal	B24

Hopper Wind Screens	B25

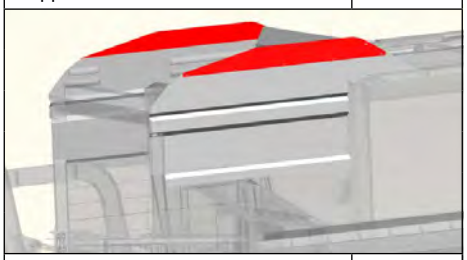

Body Roof Retainer Teeth	B26

Hydraulic Sliding Top Door	B28

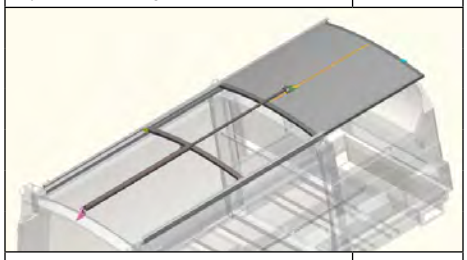

4 Bearing Blocks (Half/Pack®)	B32

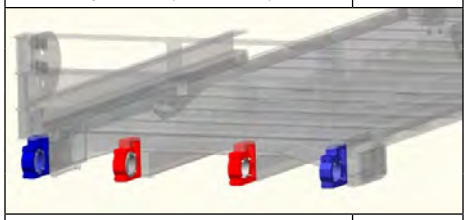

Hopper Cover (DuraPack® Body)	B33

Manual Hopper Cover (Rapid Rail® Body)	B34

Hopper Hood	B35

Autolube System for Packer	B36

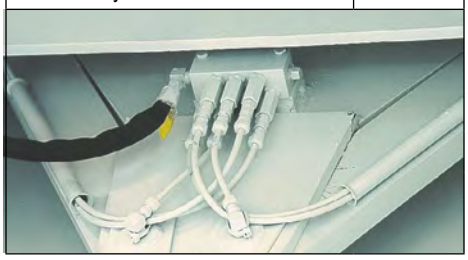

Solid Hopper Upper Extension (Rapid Rail®/STARR® System) B37

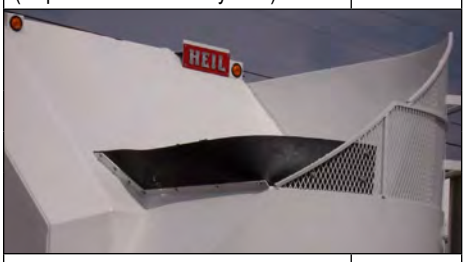

Rear Fender (Rapid Rail Body) B38

Two-Bar Trough Cart Dumper B39

Narrow Fuel Tank (R2000) B41

Top Cover (Retriever Satellite™) B42

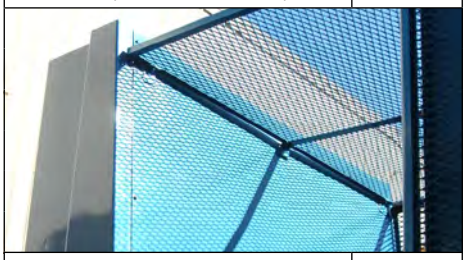

Sign Frame - J-Channel B43

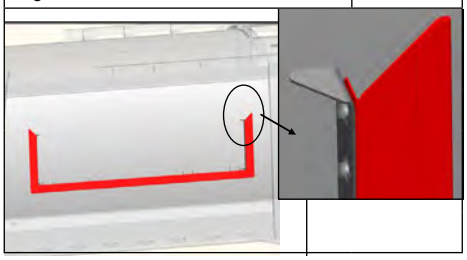

Sign Frame - Roadway B44

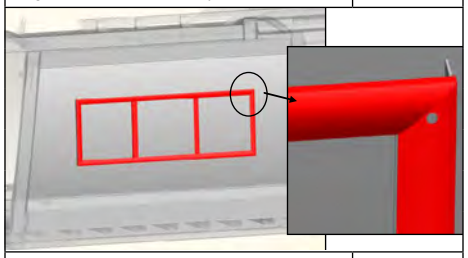

Sign Frame - Structural Channel B45

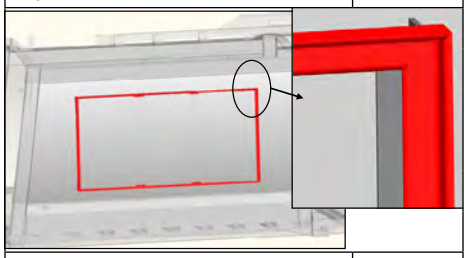

Hydraulic Tailgate Locks B46

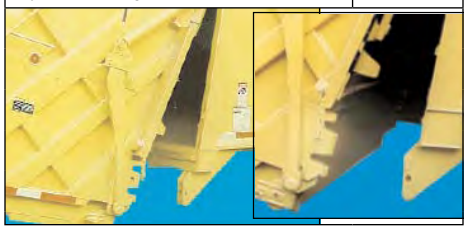

Controls & Electrical

Left-Hand (and RH) Buzzer Kit CE1

Residential Front Loader Kit Includes: Carry Can Dumper Hydraulics with Controls on Arm AutoLift™ Feature, Overheight Warning Kit, and Throttle Advance and Limit Kit CE2

Right-Hand Air Joystick CE3

Outside Joystick Control with Throttle Advance — CE4

Latest Photo Not Available

Outside Air Lever Control Kit — CE5

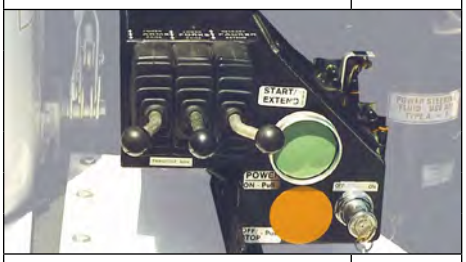

Dual Lever In-Cab Air Controls — CE6

Select-O-Pack — CE7

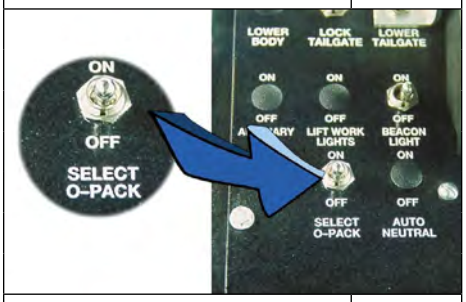

Lift Cycle Counter — CE8

Remote Lift Controls - Air Toggles (Mounted Under Seat) — CE9

Additional Joystick Control — CE10

Outside Lift Levers with Cover — CE11

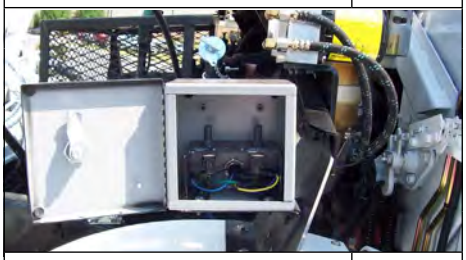

Packer and Crusher Controls (MultiTask®) — CE12

Joystick Control With Rocker Switch (Retriever Satellite™) — CE13

Remote Lift Controls (7000) Fender Mounted — CE14

Remote Rocker Switch Controls — CE15

California Back-up Alarm — CE19

Heil Optimum Payload System™ (HOPS™) — CE20

Container Lifting Mechanisms and Grabbers

Customer-Installed Cart Tipper Kit (Double) with Control Handle (Highlighted) — MG1

Additional Control Handles for Container Handling (Valve Section Not Shown) — MG2

Reeving Cylinder with Control Kit — MG3

Roll Bar with Control Kit — MG4

Arm Mechanism with Control Kit — MG5

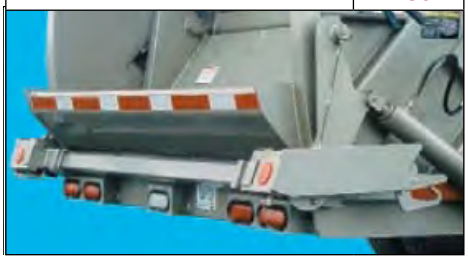

Lip and Latch Kit - Short Sill — MG6.1

Lip and Latch Kit - Long Sill — MG6.1

Lip and Latch Kit - With Cutouts — MG6.3

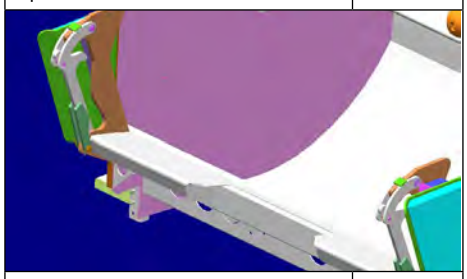

Standard Roll Bar (PowerTrak® Commercial) Latch Pivot — MG7

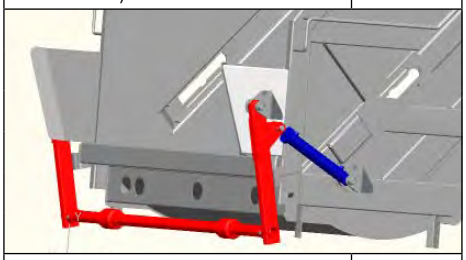

Roll Bar (PowerTrak® Commercial) - Bolster Pivot — MG8

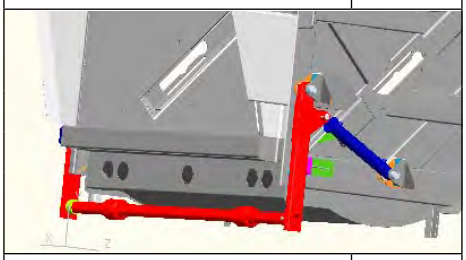

Drum Winch with Control Kit (Shown on DuraPack® 5000) — MG9

Reeving Cylinder Bracket — MG10

Forklift Style Adjustable Forks — MG11

60/90 Belt Grabber — MG15

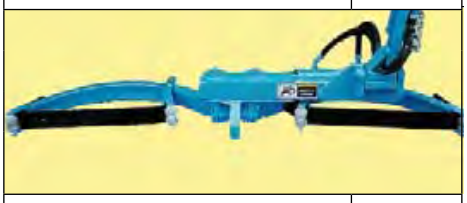

TriCuff Grabber — MG16

Changeable Spring Steel Grabber — MG17

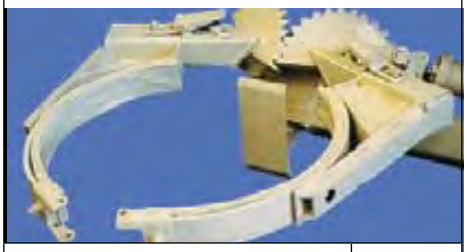

Universal Belt Grabber — MG18

Lights

Hopper Work Light (FELs) L1

Municipal Light Kit with Dual 7" Strobes (1) and Overhead Flood Light (2) L2

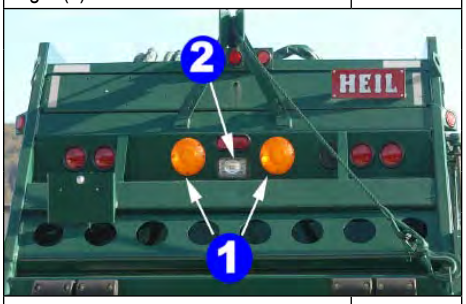

Body Side Backing Assist Light L3

Strobe Light, Amber L4

Hopper Work Light (FELs) L5

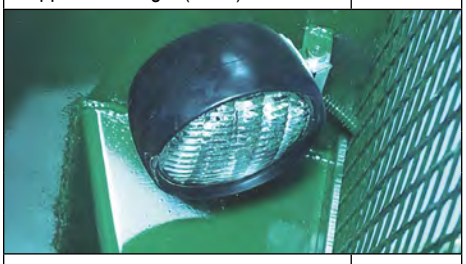

Backing Assist Lights (R2000) L6

1) Dual 7" Amber Lights on T/G
2) Strobe Light, Amber (Mounted Lower T/G) L7

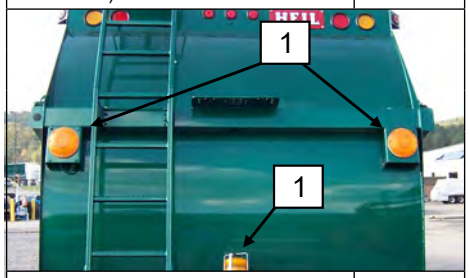

California Back-up Alarm L8

Dual Hopper Work Light (RELs) L9

Peterson Multi-Function Lights LED Strobes & Turn Light Combination L10

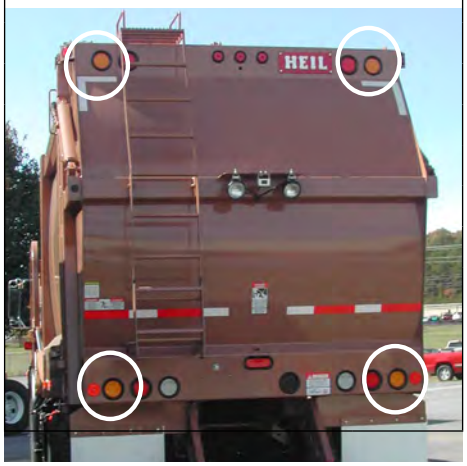

Lift and Hopper Work Light Kit L11

Dual Flood Lights on Cab L12

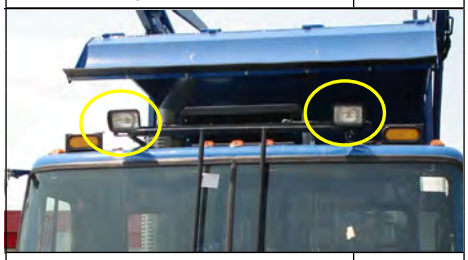

Dual Hopper Work Lights (Retriever Satellite™) L13

Dual Strobe Lights (Shown on REL) L14

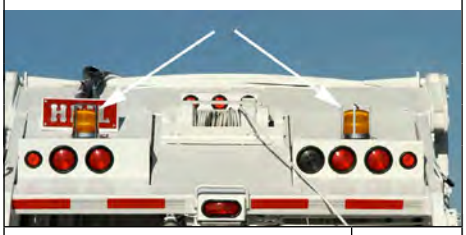

Dual Oval Amber Strobes Mounted Mid-tailgate L15

Bayne Lifters & Carry Cans

Taskmaster™

TL1124

Revolution

BTL208-12

BTL1110

MBTL180

Carry-Can with MBTL169

Effective December 1, 2017 Bayne Sales Order Form

BAYNE CART TIPPERS AND CARRY CANS

Bayne Cart Tippers

MODEL	DESCRIPTION	NOTES	ONE PER TRUCK		TWO PER TRUCK	
BTL1110 *	Rotary Actuated	Use for rear loading	☐	$4,465	☐	$8,170
BTL208-12	Rotary Actuated	Use for rear loading	☐	$4,540	☐	$8,325
MBTL180	Rotary Actuated	Use for rear loading - no packer blade interference with proper installation	☐	$4,055	☐	$7,355
TL1116	Rotary Actuated	Use for rear loading	☐	$4,515	☐	$8,275
Revolution HD	Rotary Actuated	Use for rear loading	☐	$4,780	☐	$8,695
TL1120	Rotary Actuated	Use for side or rear loading	☐	$4,515	☐	$8,275
TL1124	Rotary Actuated	Use for side loading	☐	$4,515	☐	$8,275
TL2228	Rotary Actuated	Use for side loading	☐	$5,630	☐	$10,505
Taskmaster	Direct Cylinder Actuated	Use for rear loading - modifications may be required for operation with commercial container mechanisms	☐	$3,695	☐	$6,635
GRL1110	Rotary Actuated	Grabber model for rear loading - can be used with roll bar	☐	$5,630	☐	N/A
GTL1110 **	Rotary Actuated	Grabber model for side or rear loading	☐	$7,530	☐	N/A

All Tippers above include Bayne Bracket, Control Valve, Handle, Plumbing and Hose Kit - Retriever model excluded

** The Taskmaster Hi-Lift and GTL series may not be used with commercial container mechanisms

Note: For non-traditional dumping heights, vertical lifts are available on most models

Bayne Cart Tippers

MODEL	DESCRIPTION	NOTES		Price
1910-0010	3 yard Carry Can with right side mounted cart tipper (single pin)	Includes single BTL208-12 (Bayne Can Only) Does not include body hydraulics and must be selected from the price guide	☐	$6,925
Safety Yellow Paint			☐	STD
Special Color Paint			☐	$368

TOTALS

Total from Options Above (MSRP)		**$0**
Additional Options (SOARs, Chassis Mods, Etc.) Total		
Subtotal		**$0**
Dealer Discount (%)	**0%**	**$0**
Dealer Net Price		**$0**
Additional Discount (SPR)		
Freight		
Total Price per Unit		**$0**

Terms & Conditions of Sale

1. **ORDERS.** All orders are subject to acceptance or rejection by Environmental Solutions Group, its subsidiaries, or affiliates including but not limited to: Heil Environmental, Marathon Equipment Company, The Curotto-Can, LLC, and Bayne Machine Works (collectively, "ESG"). NO ORDERS MAY BE CHANGED IN ANY MANNER WITHIN THIRTY DAYS OF THE SCHEDULED PRODUCTION DATE. ANY CHANGES REQUIRED BY THE CUSTOMER WITHIN THIS 30-DAY TIME FRAME MAY INCUR ADDITIONAL CHARGES AND WILL CAUSE THE ORDER TO BE REMOVED FROM THE PRODUCTION SCHEDULE AND RESCHEDULED AS DEEMED NECESSARY BY ESG IN ITS SOLE JUDGMENT.

2. **ORDER CANCELLATION.** After acceptance, orders for solid waste management and/or recycling Products ("Products") cannot be cancelled except upon terms that will compensate ESG fully for all inconvenience, cost, loss or damage sustained.

3. **ORDER ACKNOWLEDGEMENTS.** An Order Acknowledgment ("OA") must be reviewed, signed and returned to the applicable ESG subsidiary or affiliate to indicate Purchaser's verification the order is accurate. ESG reserves the right to hold an order from being slotted in the Production Schedule until a signed OA has been received. Regardless of whether an Order Acknowledgement has been executed, Purchaser expressly waives any claims of error or loss for orders that are produced in accordance with an OA transmitted to Purchaser that Purchaser does not correct and transmit in writing to ESG before production begins.

4. **CUSTOM ORDER REQUESTS.** Orders for Products with components not regularly carried in stock or requiring special engineering, special parts ordering or special manufacture are in every case subject to approval by the Product Management department of ESG and shall be subject to the procedures and qualifications set forth in ESG's *Custom Order Policy* as published by ESG and/or posted on the respective ESG website. Work performed at Purchaser's request such as sketches, drawings, design, testing, fabrication and materials shall be charged at then-current rates.

5. **PERFORMANCE.** ESG shall not be liable for damages of any kind whatsoever arising from failure to complete the contract in accordance with its items if such changes are due to Acts of God, wars, severe weather, strikes, fires, floods, accidents, material shortages, delays in transportation and other acts of force majeure or other causes beyond its reasonable control.

6. **INTELLECTUAL PROPERTY.** Sketches, engineering drawings, specifications, models, mock-ups, manuals, marketing materials, and all preparatory work submitted to, created or furnished by ESG shall remain its exclusive property. No other customer use of these materials is authorized, nor may derivations, alternatives or modifications created there from be used or disclosed to anyone except with the prior written consent of ESG.

7. **SHIPMENT AND F.O.B. POINT.** All shipments will be made after completion of manufacture unless otherwise agreed to in writing. In the event that agreement is reached for ESG to store completed items, the Purchaser will be invoiced immediately upon completion of manufacture, and such invoice shall be due and payable according to these terms. Storage shall be at the risk of the Purchaser and ESG shall be liable only for the ordinary care of the property. Unless otherwise stated in writing, all prices quoted or otherwise listed are F.O.B. point of manufacture. In all cases, in-transit liability and risk of loss transfers to the Purchaser at the time of delivery to the Purchaser, their employees, agents, or a delivery service or common carrier – whichever occurs first. Unless otherwise provided, with respect to the attachment or affixing of ESG Products to the Purchaser's property (e.g. truck chassis), title and risk of loss with respect to such Products are transferred to Purchaser upon initiation of such attachment.

8. **PURCHASER'S PROPERTY.** ESG may charge the Purchaser at current rates, for handling and storing Purchaser's property (e.g. truck chassis or Purchaser-supplied accessories) when held for more than thirty days. All Purchasers' property, or third parties' property, that is stored by ESG or its employees, agents or assigns (whether on or off ESG facilities) is at the Purchaser's or other party's risk. ESG shall only provide for ordinary care of the property and shall not be liable for any loss or damage thereto caused by fire, water, corrosion, vandalism, theft, negligence, or any cause whatsoever. It is the Purchaser's unconditional obligation to insure its property and/or accept the risk of loss.

9. **TRAINING.** It is the Purchaser's responsibility to provide these *Terms & Conditions of Sale* to the Product owner and to specifically notify the Product owner that it is the Product owner's responsibility to ensure that the *Operators Manual* remains with each unit and the *Parts & Service Manual* is available for use. Additionally, regardless of whether or not the manufacturer or its designee provides training at the time of Product delivery, the Product owner is responsible for training their operators and maintenance personnel and shall ensure that every person who operates or maintains the Product has been trained on the proper operation, service, storage, service hoist use, battery disconnect use, lock out/tag out procedures and the Product owner's company work rules for each Product.

10. **PRICES.** All orders are subject to current prices in effect at the time of shipment, including any applicable surcharges. Purchaser must exclusively assign the qualified alternative motor vehicle credit to ESG or its designee. Purchaser expressly understands and agrees that the pricing quoted for qualified alternative motor vehicles includes a discount predicated on ESG obtaining a stipulated tax credit and Purchaser agrees to fully compensate ESG for any reduction or recapture of said qualified alternative motor vehicle tax credit for any reason whatsoever. It is understood that recapture of the tax credit may be caused by converting a Compressed Natural Gas ("CNG") engine to a diesel engine.

11. **PAYMENT AND COLLECTION.** ESG's standard domestic payment terms are Net 30 days from the date of invoice unless modified by a separate written agreement with your company. For non-domestic shipments, a Letter of Credit or other ESG approved surety of payment may be required prior to shipment. Notwithstanding the foregoing, ESG reserves the right to administer credit in accordance with its Credit Department's sole judgment at any time to any order and its decision shall be final, non-appealable, and binding. If for any reason the Purchaser defaults on any monies owed to ESG, said Purchaser shall be responsible for all costs incurred by ESG in the collection of outstanding monies including but not limited to: collection agency fees, filing fees, judgment, interest expense, settlement, Court and/or administration costs, attorney's fees, etc. ESG reserves the right to charge and collect late fees for overdue payments.

12. **TAXES.** Unless specifically stated on your quotation and invoice, prices charged by ESG do not include Federal, State, City or other excise, occupation, sales, use, VAT or similar taxes which are extra and are the customers' obligation to pay to the applicable taxing authority at rates in effect at time of shipment. If Federal Excise Taxes are included and listed on the order acknowledgement or invoice, they are stated at the rates and regulations in effect at the time this order is written, and are subject to revision in accordance with rates and regulations in effect at time of shipment. If Federal Excise Taxes are not included on ESG's invoice, this shall not be construed as ESG offering an opinion on taxability of our product(s) or providing tax or legal advice. ESG does not provide tax advice. Customers are encouraged to consult with a tax professional to determine the potential for any tax liabilities beyond those reflected on the invoice from ESG.

13. **PRODUCT IMPROVEMENT.** ESG reserves the right to change its solid waste management & recycling Product offerings (collectively, "Products"), Product specifications, material or component suppliers, Product design, and/or Production procedures at any time in its sole judgment.

14. **MOUNTING PRICES.** For mobile equipment Products, it is the Purchaser's responsibility to provide or purchase from ESG a new chassis that meets the specifications published by ESG on the website of its applicable subsidiary or affiliate for the specific Product model & size ordered. Used chassis will not be factory mounted. Mounting prices assume normal factory installation on a fully functional truck chassis suitable for the unit purchased. Repair of chassis, relocation or installation of batteries, gas tanks, mufflers, air tanks etc. will be made at an additional charge, to be billed at the standard factory parts and labor rates. It is expressly understood that ESG is not authorized to modify exhaust systems on engines that comply with EPA emission standards which became effective in 2007. Chassis delivered to ESG requiring modification of such an exhaust system to enable body mounting will be returned to the Purchaser or a designated chassis dealer at the Purchaser's expense.

15. **WARRANTY.** ESG warrants its Products in accordance with the applicable ESG subsidiary or affiliate's *Warranty Statement* (the "Warranty Statement") provided with the Product or published on the respective website unless you have a contract with ESG providing specific terms and conditions of warranty. A copy of the *Warranty Statement* is available from your Dealer and is posted on ESG's applicable website for the Product. While the text in the *Warranty Statement* for each respective ESG entity is more specific and shall prevail, ESG's Product warranty is expressly limited to repair or replacement of any component or part thereof, for any such Product that is determined by ESG to be defective in materials or workmanship. The component or part shall be repaired or replaced without cost to the first purchaser for materials and labor provided such unit is returned for such repair or replacement to an authorized ESG Dealer within six months from the unit's in-service date to such first purchaser. Any Product warranty is not transferable, except for sales demonstration units. No warranty claims will be processed on any ESG Product unless the warranty registration was submitted timely to the ESG Customer Support Department applicable to the Product. Any service parts sold by ESG carry a six month warranty for part replacement only, due to a defect in material or workmanship. Troubleshooting time, component removal and installation labor cost is excluded from ESG's service part warranty.

16. **CHASSIS AND ACCESSORY WARRANTY.** ESG makes no warranty of Products or component parts manufactured by others and supplied or installed by us, except to the extent there is a defect in workmanship solely related to the installation at ESG's factory. Chassis, component parts and accessories are solely subject to the warranties, if any, as provided by their respective manufacturers. This expressly applies to any chassis-related issues and/or accessory components – regardless of whether said chassis or accessory was provided by ESG at the time of sale. Additionally, unless there is a defect in workmanship solely related to the installation at ESG's factory, ESG shall not administer any chassis, component or accessory manufacturer's warranty directly or as a third party liaison for the Product owner or Dealer. The Product owner shall address any such "non-ESG body" warranty issues directly with their local chassis dealer and/or the manufacturer of the specific accessory, component or equipment with no further liability to ESG.

17. **WE MAKE NO OTHER WARRANTY, EXPRESS OR IMPLIED, AND MAKE NO WARRANTY OF MERCHANTABILITY OR FITNESS FOR ANY PARTICULAR PURPOSE.** Any improper use, operation beyond rated capacity, substitution of non-OEM parts not specifically approved by us in writing, or any alteration or repair by others in such manner as in our judgment affects the Product materially and adversely shall void this Warranty. NO EMPLOYEE OR REPRESENTATIVE OF ESG IS AUTHORIZED TO CHANGE THIS WARRANTY IN ANY WAY OR GRANT ANY OTHER WARRANTY, except as part of a definitive written agreement between the manufacturer and purchaser. The above warranty supersedes and is in lieu of all other warranties whether express or implied.

18. **NO DIRECT OR CONSEQUENTIAL DAMAGES.** ESG hereby disclaims and does not assume any liability whatsoever for costs or expenses related to the use or unavailability of its Product for any reason, including but not limited to accidents, injury, death, late delivery penalties, chassis flooring cost or charges, Product down time, fire damage, loss of Product, in-transit damage or loss, opportunity cost, lost profits, or any other direct, indirect or consequential losses, damages or delay, property damage or injuries or death to persons.

19. **OFF-SITE LOSS DISCLAIMER.** The Purchaser shall bear all risk for damage or loss to the purchaser-owned Product, chassis, accessories, or injury to property or persons, while the Product and/or chassis is either at ESG facilities, enroute to ESG facilities, at or enroute to/from a third party subcontractor of ESG's, in transit to or from Purchaser's or the chassis manufacturer's location, or to/from any third party Dealer or a component supplier's location.

20. **CHOICE OF LAW AND VENUE.** This agreement shall be interpreted according to the laws of the State of Tennessee. Any claims lodged against ESG involving this order in any way must be filed and adjudicated in the Circuit or Federal Court located in Hamilton County, Tennessee, and in the case of appeal, at the situs of their respective appellate Courts.

21. **NON-WAIVER.** Our failure at anytime to exercise any right we may have under this agreement shall not constitute a waiver thereof nor prejudice our right to enforce same thereafter.

22. **SECURITY INTEREST.** The Purchaser hereby grants a first priority purchase money security interest and lien to ESG in and to all Products and goods sold to Purchaser and to which these *Terms & Conditions of Sale* relate, to all chassis and trucks to which any such Products or goods become accessions, and to all Products, proceeds and accessions thereto, from time to time (collectively, the "Product Collateral") to secure all obligations of the Purchaser or any person or entity related to Purchaser, under any agreement, arrangement or financing with or provided by the Company, including without limitation, the obligation to pay the unpaid purchase price of all Products and goods from time to time sold by ESG to Purchaser (collectively, the "Obligations"). The Purchaser represents and warrants that none of the Product Collateral is subject to any other lien, security interest or claim of any type or nature, and covenants that it: (i) will not create or permit to exist any lien, security interest or claim in any portion of the Product Collateral in favor of any other person, (ii) will pay, prior to any delinquency, all taxes (including all property taxes), charges or other obligations which may be owing with respect to the Product Collateral from time to time, (iii) will not change its name, place of incorporation or creation, address or location of the Product Collateral without first providing ESG with not less than 30 days prior written notice, (iv) will take all steps requested by ESG to obtain and maintain the perfection of the security interests granted hereunder, (v) will keep the Product Collateral fully insured against destruction or damage in an amount up to its full insurable value, and will name ESG as additional insured and loss payee under all such insurance policies, and (vi) will cooperate with ESG upon any default of any of the Obligations and will, at the request of ESG, turn over and deliver all Product Collateral to or at the direction of ESG. Purchaser will, at ESG's request, execute such additional security agreements and amendments and additions thereto or hereto as ESG requests in order that it may have at all times a first priority purchase money security interest and lien securing the Obligations. Purchaser hereby authorizes ESG to file financing statements and amendments thereto in all relevant jurisdictions naming Purchaser as debtor and describing the Product Collateral as collateral.

23. **ENTIRE AGREEMENT.** Unless a prevailing purchase contract is in place between the parties hereto, this order, including the above Terms & Conditions of Sale, contains the complete and final agreement between the parties hereto and no Purchaser-supplied purchase order terms, verbal agreement, or other document in any way modifying or supplementing any of these terms and conditions will be binding on ESG unless agreed to in writing by an authorized representative of ESG.

HEIL ENVIRONMENTAL WARRANTY STATEMENT

The Heil Co. d/b/a Heil Environmental ("Heil") warrants its waste collection equipment to be free from defects in material and workmanship under normal single-shift use for a period of Twelve (12) months or 2000 hours of operation (whichever comes first) from the date of equipment In-Service or during the period of coverage offered by an extended warranty program, when operated in accordance with its *Operator's Manual* and proper service and maintenance as described in Heil *Service Bulletins* and *Parts & Service Manuals* are performed. The standard or extended equipment warranty is not transferable except for sales demonstration units.

This warranty is expressly limited to the repair or replacement of any component or part thereof, of any such collection body manufactured by Heil that is proven to Heil's satisfaction to have been defective in material or workmanship. Such components or parts shall be repaired or replaced at Heil's option without cost to the original purchaser for parts and labor provided such unit is returned to an authorized Heil Dealer for replacement or repair. The repair or replacement must be made during the standard or extended warranty coverage period.

Before any warranty can be allowed on new equipment, a validated warranty registration form must be on file with Heil's Customer Service Department within sixty (60) days of the equipment's In-Service date. Wear items are excluded from warranty coverage.

All OEM service parts sold by Heil have a six (6) month warranty from the date of purchase. Aftermarket parts purchased from Heil are supported by a 90-day warranty. The parts warranty covers parts only, providing that factory inspection reveals a defect in material or workmanship. Labor, troubleshooting, equipment downtime, etc. is not covered under the parts warranty policy.

HEIL MAKES NO OTHER WARRANTY, EXPRESSED OR IMPLIED, AND MAKES NO WARRANTY OF MERCHANTABILITY OR OF FITNESS FOR ANY PARTICULAR PURPOSE. HEIL DOES NOT ASSUME ANY LIABILITY OR ACCEPT CLAIMS FOR LOSS OF PROFITS, PRODUCT DOWN TIME OR ANY OTHER DIRECT, INCIDENTAL OR INDIRECT CONSEQUENTIAL LOSSES, COSTS, DAMAGES, OR DELAYS.

Any improper use, operation beyond rated equipment or component capacity, substitution of parts that are not Heil approved, or any alteration or repair by others in such a manner as in Heil's sole judgment affect the product operation or integrity shall void the warranty. Other than the extension of the standard warranty period purchased under a supplemental *Heil Extended Warranty Program*, no employee or representative is authorized to modify this warranty in any way nor shall any other warranties be granted. No dealer-supplied warranty program is endorsed or supported by Heil. Heil retains the right to modify its factory warranty program at any time.

HEIL SALES ORDER COVER PAGE

SF0377Y (9-1-17)

Submission Date:	Requested Delivery Date:	Order Submitted By:	Telephone #:

Pre-Approved Delivery Commitment Attached:	Curotto Can to be Ordered? Curotto PO #	Heil Model:	Body Size: Cubic Yard Roll Off: Length	Number of Units:

Customer P.O. No:	Regional Manager/KAM:	Discount:	Body Paint Code (DuPont Only):

Pilot Inspection or Unit Review? Date	Freight:	Ship Via:	NJPA:	HGAC:	Terms:

Unit Review? Date	Custom Form?	SPR Form Attached?	Customer Class:	NJPA Member ID #:

Heil Dealer Information		End-User Information	
Company Name:		Company Name:	
Contact Person:		Contact Person:	
Telephone:	Extension:	Telephone:	Extension:
e-mail Address:		e-mail Address:	
"Bill To" Address		**End User Address**	
Street / P.O. Box:		Street / P.O. Box:	
City:		City:	
State:	Zip:	State:	Zip:

Shipping Information		Chassis Dealer	
Delivery Location:		Company Name:	
Contact Person:		Contact Person:	
Telephone:	Extension:	Telephone:	Extension:
Street / P.O. Box:		Street / P.O. Box:	
City:		City:	
State:	Zip:	State:	Zip:

Expected Chassis Delivery Date:	Is This a Shipper Unit?	Match Cab and Body Paint?	Chassis Paint Code (DuPont Only):
Chassis Make: / Chassis Model/Year: /	Drive Type:	FRONT GAWR: REAR GAWR: GVWR: Usable CA/CT: Wheelbase:	Chassis Axle Type Required of Air Weigh Scales Install:
Engine Make: / Transmission Make:	Engine Torque @ Idle:		Chassis VIN : *Submit Full 17 Digit VIN # to Heil before Chassis Manufacturing Completion
Engine Model: / Transmission Model:	Operate @ Idle?		
Alternative Fuel? Yes Fuel Type CNrG Tailgate *Is FMM pre-installed on the chassis? No	Auxiliary Axle? Axle Configuration?	Exhaust Configuration: Note: Odyssey FEL Hydraulics Requires RHS Fuel & DEF Tanks. Automated Side Loaders Lift Location Requires LHS Fuel & DEF Tanks.	Is this a Heil Ready Truck Consignment Chassis? Shipment required within 30 days?

Please Fax to Heil Customer Support with Body Price Guide Pages at 334.460.2110 or e-mail: orders@doveresg.com

Effective December 1, 2017 Ready Truck and Chassis Mods Sales Order Form

READY TRUCK AND CHASSIS MODIFICATIONS

	Chassis Modification Options - All Makes	
☐	Wheelbase Shortening	$2,550
☐	Wheelbase Lengthening	$3,715
☐	Customer's Choice of One Color Finish Paint for Cab	$3,715
☐	Heated Mirrors - installed	$1,000
☐	Telma Frictionless Braking System - installed	$17,700
☐	Roof Mounted Air Conditioning System - Red Dot Model 6100 - installed	$6,910
☐	Bumper Extension Modification	$2,900
	Chassis Component Relocation Charges	
☐	Relocation of Air Dryer to Heil Specifications	$470
☐	Relocation of Air Tanks to Heil Specifications	$645
☐	Relocation of Battery Box to Heil Specifications	$425
☐	Two Battery Box Replacement	$880
☐	Three Battery Box Replacement	$935
☐	Relocation of Fuel Tank to Heil Specifications	$590
☐	Relocation of Oil Cooler to Heil Specifications	$365
☐	Relocation of Muffler to Heil Specifications - muffler will only be moved under the guidelines obtained from the chassis vendor by	$890
	Chassis Re-Programming Charge	
☐	Re-Programming of Transmission - as necessary to adhere to program guidelines as presented in Product Bulletin 313	$335
	Chassis Handling Charges	
☐	Chassis Tow Away Prep - condition whereby a chassis is checked in, fueled, stored, and then towed from the premises for any reason. Towing charge is not included	$280
☐	Chassis Drive Away Prep - condition whereby a chassis is checked in, fueled, stored, installed with drive away lights and mud flaps, and then driven away from the premises for any reason. Drive away charge is not included	$470
☐	Alternative Fuel (CNG/LNG) Handling Fee - Tank and Gas for internal transport	$805

	TOTALS		
	Total from Options Above (MSRP)		**$0**
	Additional Options (SOARs, Chassis Mods, Etc.) Total		
	Subtotal		**$0**
	Dealer Discount (%)	**0%**	**$0**
	Dealer Net Price		**$0**
	Additional Discount (SPR)		
	Freight		
	Total Price per Unit		**$0**

Effective December 1, 2017 Heil Training Sales Order Form

Heil Factory and On-Site Training

☐	Three day factory training at Heil (Includes)		**$1,305**
	Day 1 - Basic hydraulics with plant tour		
	Day 2 - Basic electronics with PLC and Cortex training		
	Day 3 - Product specific service school		
☐	On-Site Training (Includes) Maximum 8 Students		**$3,975**
	Maintenance/Service Training - Safety, Preventative Maintenance, Unit Hydraulics, Unit Electronics, Troubleshooting		
	Operator Training - Safety, Unit Operation, Operator Checks, Unit Demo		
	$100 for each additional student		
	The customer will be responsible for supplying an adequate classroom		
☐	Start-Up Support (Includes)		**$6,535**
	Maintenance Training, Operating Training, Start-up Service Support		
☐	Heil Training Trailer (Includes)		**$7,325**
	All factory training offerings except for the plant tour		
	All On-Site training offerings		
	Start-up support		
	Fee does not include transport cost of the training trailer. Contact Heil Training Manager for cost breakdown.		
	Capability of 12 student per session		
	Customer must provide parking area for the training trailer		
TOTALS			
	Total Price		**$0**

2019 - Rovver X System, Accessory, & Component Price List		
		Price
E-RX-SYS-Truck-Basic-18	Rovver X Basic Truck Package	**$76,226.50**
E-RX-SYS-PRO-18	Rovver X Pro Truck Package	**$83,230.00**
~~E-RX-SYS-PRO500-18~~	~~Rovver X Truck Pro Package with RAX500 Cable Reel~~	**~~$105,560.00~~**
E-RX-SYS-Portable-18	Rovver X Portable Package with RMX200 Cable Reel	**$60,392.50**
E-RX-SYS-Industrial-18	Rovver X Portable Package with RMX100 Cable Reel	**$60,900.00**
E-RX-SYS-Basic-400-18	Rovver X Basic Truck Package with RX400 Crawler	**$101,500.00**
E-RX-SYS-PRO-400-18	Rovver X Pro Truck Package with RX400 Crawler	**$134,995.00**
E-RX-SYS-SAT-ADD-Basic-18	Add on SAT System for Existing RX Pro Systems	**$98,455.00**
E-RX-SYS-SAT-ADD-PRO-18	Add on SAT System for Existing RX Basic Systems	**$81,200.00**
E-RX-SYS-SAT-18	Stand Alone RXSAT System with RAX300 Cable Reel	**$118,247.50**
E-RX-SYS-SAT-Combo-18	Combination RX Mainline and SAT System	**$149,205.00**
564-0900-04	RX Camera Elevator Kit, QCD	**$13,195.00**
559-0900-03	RX Aux Light w/ Rear Camera, QCD	**$3,755.50**
569-0900-00	RX Carriage	**$10,454.50**
080-0701-00	Wheel D85x18 / d12 QCD (small rubber)	**$228.38**
080-0702-00	Wheel D120x31 / d12 QCD (Med rubber)	**$268.98**
080-0703-00	Wheel D150x52 / d12 QCD (Lg rubber)	**$268.98**
080-0704-00	Wheel D175x88 / d12 QCD (XXL Rubber)	**$532.88**
080-0705-00	ELKA Wheel D85x18 / d12 QCD (Sm Grease)	**$258.83**
080-0706-00	ELKA Wheel D120x31 / d12 QCD (Med Grease)	**$329.88**
080-0707-00	ELKA Wheel D150x52 / d12 QCD (Lg Grease)	**$375.55**
080-0709-00	HMS Wheel D85x18 / d12 QCD (Sm Aggressive)	**$431.38**
080-0710-00	HMS Wheel D145x52 / d12 QCD (Lg Aggressive)	**$583.63**
080-0711-00	HMS Wheel D120x31 / d12 QCD (Md Aggressive)	**$568.40**
080-0712-00	Climbing (Middle Wheel)	**$157.33**
586-0920-00	DCX5000 Controller incl. CCUI	**$21,315.00**
598-0900-00	VC500 with Vision Report Software	**$11,926.25**
536-0900-05	RX140SAT Crawler QCD	**$42,630.00**
555-0900-03	RX95 Crawler QCD	**$13,195.00**
560-0900-06	RX130 Crawler QCD	**$18,777.50**
585-0900-04	RX400 Crawler QCD incl 2 sets wheels	**$53,795.00**
554-0900-03	Axial Camera RAC50	**$5,075.00**
561-0900-04	RCX90 Camera	**$24,360.00**
581-0900-05	PTP70II Camera (does not include spring or crawler connector)	**$14,210.00**
558-0200-02	Camera to Crawler adaptor for PTP70II	**$1,903.13**
581-0800-04	Spring Connector for PTP70II for SAT / Agilios	**$2,233.00**
592-0900-02	AC52 Camera	**$7,308.00**
595-0900-00	PTP50 SAT/Agilios Camera	**$13,195.00**
595-0960-00	PTP50 RX Camera	**$13,195.00**
596-0900-02	AC40 Camera	**$4,872.00**
551-0900-01	RMX100 Manual Reel w/ 100M Cable	**$13,398.00**
562-0900-03	RAX300 Cable Reel w/ 300M Cable	**$27,405.00**
563-0900-01	RMX200 Manual Reel w/ 200M Cable	**$14,210.00**

589-0900-01	RAXSAT150 Cable Reel	**$37,555.00**
590-0900-02	RAX500 Cable Reel w/ 500M Cable	**$42,630.00**
573-0902-00	Laser Shape Scanner LSS RCX90	**$10,150.00**
RX-Digisewer	DigiSewer Camera & Software Package	**$38,062.50**
571-0900-00	Ring laser DS3 for RX DigiSewer	**$7,612.50**
597-0900-01	Camera Adapeter RCC90 QCD	**$5,582.50**
E-V-SYS-SPP-009	Verisight Pro Push Camera 200'	**$9,986.25**
E-V-SYS-SPP-109	Verisight Pro Push Camera 330'	**$10,911.25**
E-QV-SYS-AIRHD	Quickview Air HD Camera	**$15,225.00**
E-JET-SYS-8	JetScan HD Video Nozzle	**$12,941.25**
E-030-0900-00	CleverScan Manhole Camera	**$71,050.00**

U.S.A.

TRACKLESS SERIES MT7

August 01, 2018

Suggested H-GAC U.S. Retail Price

5% Discount Applies off of the List Price

MT7	74 hp Tractor with 16" Radials (LT245/75R)	LIST PRICE	$	132,403.00

Air conditioning, heat, cab pressurizer, climate control,
8 Amber strobes w/ branch guard, Extra pump & valve,
Reversing engine fan, LED tail & marker lights, F-N-R joystick,
Intermittent front wiper, Backup camera, Battery disconnect swtich
Articulation lock, Remote Battery terminal, Low hyd. oil warning,
Ride control, Cruise control, Hi/low beam headlights, Rear wiper/washer

All of the above is standard on the MT7

TIRE OPTIONS FOR TRACTOR

OPTW02	Summer tires (31 x 13.5 x 15)	add to list price	$	897.00
OPTW01	Dual loader lug tires	add to list price	$	3,524.00
OPTW03	Single loader lug tires of front w/ dual on rear only (L.L.)	add to list price	$	1,762.00
OPTW11	Calcium filled tires	add to list price	$	306.00
OPTW11-1	Calcium filled tires in tubes	add to list price	$	306.00

TRACTOR OPTIONS

OPB05	Rear PTO	$	6,203.00
Z3PT	Rear three point hitch (crated)	$	3,877.00
OPB02	Deep reduction transfer case (only avail if ordered with tractor)	$	8,757.00
OPDT13-2	Locking differentials	$	2,163.00
OPL02-1	Additional high mount tail lights on rear of cab	$	390.00
OPEC49	Automatic night time white noise backup alarm	$	359.00
OPM70	WIFI Diagnostic package. No monthly or annual fees	$	628.00
OPB04-7	Rear dump body with front counterweights (requires Opt 16 AND Opt 4 OR Opt 5)	$	7,754.00
OPM39	Data collectin / GPS connector	$	633.00
OPCE08	Rear license plate bracket and light	$	253.00
OPM08	Tow behind sander pkg includes hitch, electric brake control, trailer connector	$	1,846.00
OPB06-2	Break-in filter kit	$	426.00
OPCI15-2	2 1/2lb. Fire extinguisher	$	195.00
OPEC13	Locking hoods	$	422.00
OPCI04	Sun visor	$	274.00
OPL24	LED headlights & work light	$	570.00
OPCI16	First aid kit	$	100.00
OPL17-3	LED work light	$	343.00
OPL21	Guards on all lights	$	501.00
OPH02	Dust caps on all couplers	$	158.00
OPH04	Reversing motor spool	$	897.00
OPCEI13-1	Roof guard	$	422.00
OPCI03	Extra keys	$	11.00

TRACKLESS SERIES MT7

Suggested H-GAC U.S. Retail Price
5% Discount Applies off of the List Price

TIRES & RIMS PURCHASED SEPARATELY FROM TRACTOR

ZTW5R	Radial tire (LT245/75R)		$	311.00
ZWW5RTD	16" rim for radial tire		$	148.00
ZTW510GI	Loader lug tire 10.00 x 16.5 6-ply		$	243.00
ZWW5R	16.5" rim for loader lug		$	148.00
ZTS5C	Summer tire 31 x 13.5 x 15		$	396.00
ZSW5	15" rim for summer tire		$	232.00
OPTW17	Dual loader lug tires & rims (8 tires with rims and hardware)		$	5,381.00

WINTER ATTACHMENTS

Z51B	51" snowblower with sidewalk chute		$	10,418.00
Z51GRB	51" ribbon snow blower w/ sidewalk chute		$	17,059.00
Z60B	60" snowblower with sidewalk chute		$	10,582.00
Z60GRB	60" ribbon snowblower w/ sidewalk chute		$	18,278.00
Z75RB	75" ribbon snowblower w/telescopic chute		$	28,221.00
Z70B	70" snowblower with sidewalk chute		$	10,793.00
Z80B	80" snowblower with sidewalk chute		$	12,581.00
	Truck chute in lieu of sidewalk chute	add	$	739.00
ZLCH	Truck loading chute complete		$	1,772.00
ZTLCH	Telescopic Truck loading chute complete (MT7 only)		$	5,381.00
ZAB5	5 ft angle plow	less attaching kit	$	2,543.00
ZABDT	5 ft double trip plow	less attaching kit	$	3,756.00
ZAB6	6 ft angle plow	less attaching kit	$	2,769.00
ZAB7	7 ft angle plow	less attaching kit	$	3,576.00
ZAB8	8 ft angle plow	less attaching kit	$	3,840.00
ZAK	Angle plow attaching kit		$	3,292.00
ZFSPA	Front sander/plow	complete	$	10,128.00
ZVP	Sidewalk V plow	complete	$	4,906.00
ZVPH	5 position folding plow	complete	$	7,237.00
ZHS	Rear salt & sand spreader with single agitator		$	7,353.00
ZHSDI	Rear salt & sand spreader with triple agitator		$	8,625.00
ZTBS	Tow behind sander with brakes 1-1/4 yd capacity (requires Opt 44)		$	16,142.00
ZWTBR	Rear brine spray tank with pump and spray bar		$	4,357.00

TRACKLESS SERIES MT7

Suggested H-GAC U.S. Retail Price
5% Discount Applies off of the List Price

MOWING ATTACHMENTS

ZFM	74" front flail mower	$	11,246.00
ZB457-1	Boom flail (requires dual loader lug tires)	$	32,863.00
ZRM6	72" rotary finishing mower	$	7,200.00
ZRM10	120" rotary finishing mower	$	18,674.00
ZRM14	168" rotary finishing mower	$	21,628.00
ZRM14P	168" Progressive mower	$	26,270.00

ASPHALT ATTACHMENTS

ZCP	Cold planer w/ standard drum	$	24,712.00
ZCPR	Cold planer w/ Ranjo drum	$	30,215.00
	(both cold planers require: Opt 9 deep reduction)		

SWEEPERS AND SPRAY SYSTEMS

ZPAS	60" x 32" dia angle sweeper	$	7,491.00
ZPAS6	72" x 32" dia angle sweeper	$	7,913.00
ZPAS7	84" x 32" dia angle sweeper	$	8,335.00
ZPAS8	96" x 32" dia angle sweeper	$	10,297.00
ZPUS	48" pickup sweeper	$	8,387.00
ZWT	Water tank and pump kit for all sweepers	$	3,877.00
ZPASB-1	Spray bar kit for angle sweeper	$	243.00
ZPUSB-1	Spray bar kit for pickup sweeper	$	159.00
	14 ft rear mounted spray boom	$	1,372.00

AERATOR, FRONT END LOADER, LEAF LOADER

ZAER	Aerator	$	11,922.00
ZFL49	Front end loader with 49" wide bucket	$	10,867.00
ZFL77	Front end loader with 77" wide bucket	$	10,867.00
ZSG	Stump Grinder	$	14,084.00
ZLFL	Leaf loader complete	$	43,572.00
	(requires 1/2 set of dual tire, loader lugs tires on front & reversing motor spool valve)		
ZASPH	Infrared asphalt heater (requires generator)	$	18,278.00
ZGEN	Generator with security fence	$	14,876.00
	Buffalo Turbine Debris Blower	$	7,280.00

Notes:

- Freight charges apply to options purchased without base tractor.
- PDI charges may apply to options purchased without base tractor if installation is needed.
- 5% discount applies off of list price

2018 Pricing

Trailer Mounted Vacuum Debris Collectors

All prices are F.O.B. Richmond, VA
Picture may show some optional features

Page Index

Tow Behind Trailer Mounted Models:

Model XV450 – page 3

Model XV500 – page 4

Self-Contained Trailer Mounted Models:

Model XV550TM25 (25 cubic yard) – page 5

Model XV550TM30 (30 cubic yard) – page 6

SKU#	Xtreme Vac Model XV450	MSRP
XV450.K87	Kubota WSG3800 3.8L 4 cylinder gasoline engine rated for 87 HP @ 2600 rpm	**$ 28,600.00**
XV450.JD74	John Deere Power Tech EWX 2.9L 3 cylinder diesel rated for 74 HP Final Tier 4	**$ 33,280.00**
	28" diameter suction impeller with six 3/8" thick T-1 steel blades	
	3-groove power band belt drive for suction impeller	
	16" diameter x 120" urethane suction hose with steel nozzle	
	90 degree inlet elbow to enhance curbside pickup	
	16" diameter rubber exhaust hose	
	Hydraulic hose boom powered by an electric/hydraulic pump	
	Boxed perforated pleated radiator screen	
	13" clutch assembly with a 2.25" diameter PTO shaft	
	30-gallon polyethylene fuel tank	
	Electronic engine controls with engine safety shut down system	
	1/4" thick trailer deck with channel members on the ends	
	Single 4,500 pound rubber Torflex axle with EZ lube hubs	
	ST225-75-R15 radial tires mounted on steel wheels and steel fenders	
	Electric brakes with break-away actuator	
	LED type DOT lights and aoval LED amber flasher light at rear	
	HD height adjustable pintle eye with three quick release pins	
	Parking jack with 5" swivel castor wheel	
	All components pre-painted prior to assembly - White Color	

All prices are F.O.B. Richmond, VA
Picture may show some optional features

SKU#	Xtreme Vac Model XV500 COLLECTOR BOXES	
	72" high x 78" wide (81" wide outside dimension)	
	Construction consists of 3/16" x 1-1/2" angle frame fitted with 12-ga. steel panels	
	Top of box is fitted with expanded metal	
	Single rear door is hinged from the top with four cleave type hinges with 3/4" pins	
	Rear door is equipped with flexible rubber leaf box connector and tube support	
	Rear over-center latch mechanism secures the rear door	
	The rear door has a crossbar to keep it securely closed	
	Four lifting eyes are provided as well as a total of eight mounting loops	
	Interior of box is equipped with a rubber deflector	
	Delivered fully assembled ready for operation	
	Painted: Standard white color	
		MSRP
XV500.8	8' long box 72" H x 78" W	**$ 5,286.00**
XV500.9	9' long box 72" H x 78" W	**$ 5,512.00**
XV500.10	10' long box 72" H x 78" W	**$ 5,319.00**
XV500.11	11' long box 72" H x 78" W	**$ 5,960.00**
XV500.12	12' long box 72" H x 78" W	**$ 6,185.00**
XV500.13	13' long box 72" H x 78" W	**$ 6,410.00**
XV500.14	14' long box 72" H x 78" W	**$ 6,635.00**
XV500.15	15' long box 72" H x 78" W	**$ 6,887.00**
XV500.16	16' long box 72" H x 78" W	**$ 7,249.00**
SP.PNT	Special paint color other than standard white	**$ 665.00**

All prices are F.O.B. Richmond, VA
Picture may show some optional features

SKU#	Xtreme Vac Model XV550TM25	MSRP
XV550TM25.K87	Kubota WSG3800 3.8L 4 cylinder gasoline engine rated for 87 HP @ 2600 rpm	**$ 54,964.00**
XV550TM25.JD74	John Deere Power Tech EWX 2.9L 3 cylinder diesel rated for 74 HP Final Tier 4	**$ 59,644.00**
	Hopper - 25 cubic yards with dual side hinged rear doors	
	28" diameter suction impeller with six 3/8" thick T-1 steel blades	
	3-groove power band belt drive for suction impeller	
	16" diameter x 120" urethane suction hose with steel nozzle	
	Hydraulic hose boom powered by an electric/hydraulic pump	
	13" clutch assembly with a 2.25" diameter PTO shaft	
	30-gallon polyethylene fuel tank	
	Electronic engine controls with engine safety shut down system	
	Boxed perforated pleated radiator screen	
	Underbody type hoist that dumps to 52 degrees and is power up/down	
	Gear driven hydraulic pump powers the 26.6 ton capacity hoist	
	Tandem axles with a combined rating of 24,000 pounds	
	Eight 235/80R16E tires mounted on steel wheels	
	Electric brakes with break-away actuator	
	PTO Safety engagement system	
	LED type DOT lights and two rear amber LED oval flashers	
	HD height adjustable pintle eye with three quick release pins	
	Manual parking jack with drop foot	
	All components pre-painted prior to assembly - hopper standard white color	
	Engine compartment & vacuum blower housing painted battleship grey	
Options		
SP.PNT.SCL	Special hopper paint in lieu of standard white	**$ 988.00**
SCL800.029	Air Scoop to redirect exhausted air towards rear of unit	**$ 2,652.00**
8OPT	BE (bottom exhaust) for 25 cubic yard units	**$ 8,268.00**
SCL800.624G.I	Hydraulic front parking jack in lieu of manual jack	**$ 1,658.00**
MDH.16.120	HD Rubber suction hose in lieu of urethane	**$ 780.00**
450.4004.5.OPT	HD Suction impeller with 1/2" thick blades	**$ 1,430.00**
2248X.PTO.KIT.I	Fluid Drive coupler in lieu of standard clutch	**$ 4,082.00**
SCL805.810.P.OPT	11 gauge perforated top screens with 3/16" holes in lieu of standard	**$ 2,652.00**
SCL65.LH	Driver's (street) side pickup	**$ 1,872.00**

All prices are F.O.B. Richmond, VA
Picture may show some optional features

SKU#	Xtreme Vac Model XV550TM30	MSRP
XV550TM30.K87	Kubota WSG3800 3.8L 4 cylinder gasoline engine rated for 87 HP @ 2600 rpm	**$ 56,160.00**
XV550TM30.JD74	John Deere Power Tech EWX 2.9L 3 cylinder diesel rated for 74 HP Final Tier 4	**$ 60,840.00**
	Hopper - 30 cubic yards with dual side hinged rear doors	
	28" diameter suction impeller with six 3/8" thick T-1 steel blades	
	3-groove power band belt drive for suction impeller	
	16" diameter x 120" urethane suction hose with steel nozzle	
	Hydraulic hose boom powered by an electric/hydraulic pump	
	13" clutch assembly with a 2.25" diameter PTO shaft	
	30-gallon polyethylene fuel tank	
	Electronic engine controls with engine safety shut down system	
	Boxed perforated pleated radiator screen	
	Underbody type hoist that dumps to 52 degrees and is power up/down	
	Gear driven hydraulic pump powers the 26.6 ton capacity hoist	
	Tandem axles with a combined rating of 24,000 pounds	
	Eight 235/80R16E tires mounted on steel wheels	
	Electric brakes with break-away actuator	
	LED type DOT lights and two rear amber LED oval flashers	
	HD height adjustable pintle eye with three quick release pins	
	PTO Safety engagement system	
	Manual parking jack with drop foot	
	All components pre-painted prior to assembly - hopper standard white color	
	Engine compartment & vacuum blower housing painted battleship grey	
Options		
SP.PNT.SCL	Special hopper paint in lieu of standard white	**$ 988.00**
SCL800.029	Air Scoop to redirect exhausted air towards rear of unit	**$ 2,652.00**
8OPT	BE (bottom exhaust) for 30 cubic yard units	**$ 8,268.00**
SCL800.624G.I	Hydraulic front parking jack in lieu of manual jack	**$ 1,658.00**
MDH.16.120	HD Rubber suction hose in lieu of urethane	**$ 780.00**
450.4004.5.OPT	HD Suction impeller with 1/2" thick blades	**$ 1,430.00**
2248X.PTO.KIT.I	Fluid Drive coupler in lieu of standard clutch	**$ 4,082.00**
SCL805.810.P	11 gauge perforated top screens with 3/16" holes in lieu of standard	**$ 2,652.00**
SCL65.LH	Driver's (street) side pickup	**$ 1,872.00**

All prices are F.O.B. Richmond, VA
Picture may show some optional features

ACCUBRINE®
automated brine maker
NXT

ACCUBRINE®
blending system

New Unit Name	NJPA Price
Accubrine NXT	$ 59,000.00
NXT w/Truck Fill	$ 81,500.00
NXT w/Truck Fill & 1 Additive	$ 94,000.00
NXT w/Truck Fill & 2 Additives	$101,000.00
NXT w/Truck Fill & 3 Additives	$108,000.00
OffLoad Option	$ 1,750.00
Stand Alone Truck Fill	$ 46,000.00

Stand Alone Truck Fill with Blending System

	NJPA Price
SATF & 1 Additive	$53,000.00
SATF & 2 Additives	$60,000.00
SATF & 3 Additives	$67,500.00

***** *The AccuBrine NXT-Gen brine maker, truck fill and blending systems come standard with 3 phase electric.* Please see options page if interested in single phase electric system.**

Freight: FOB Hebron, KY

All Accubrine NXT systems and options must be installed by a Cargill Representative or a Factory Trained Representative

Installation Costs will be quoted by a Cargill Representative or a Cargill dealer Representative

Important: The customer will also be given a list of pre-installation guidelines. These are things the customer needs to have in place before an Accubrine system can be installed. The guidelines on this list are the sole responsibility of the customer.

Options

Quantity	Item Description	Part Number	Description	Price
	Single Phase Electrical Option Kit for NXT GEN Brinemaker Only		Single to three phase electrical convertor	$ 4,020.00
	Single Phase Electrical Option Kit for NXT GEN Brinemaker and Truck Fill/blending Unit		Single to three phase electrical convertor	$ 8,800.00
	Single Phase Electrical Option Kit Stand Alone NXT GEN Truck Fill/blending Unit		Single to three phase electrical convertor	$ 4,800.00
	Off Load Kit for Truck Fill Unit			$ 1,734.00
	Salt Tank	100011548 (BM-001)	Fiberglass salt tank	$ 20,000.00
	2" Storage Tank Fitting Kit	100011584 (BM-018)	2" tank flange, 2" ball valve, manifold hose barbs *Clamps and gaskets included.	$ 330.00
	3" Storage Tank Fitting Kit	100011737 (BM-079)	3" tank flange, 3" ball valve, manifold hose barbs *Clamps and gaskets included.	$ 612.00
	300 GPM Pump Kit - Price does not inlcude installation - (see below*)	100011741 (BM-083)	Pump, motor control with overload, starter, and circuit breaker 3 phase	$ 7,000.00
	Single phase electric Recycled Water Kit and Dilute Isolation Kit (Price does not include installation)		Pump, motor starter circuitry, 3-way valve, level sensor, hose barbs and logic control, fittings for splitting dilute water	$ 9,155.00
	Three phase electric Recycled Water Kit and Dilute Isolation Kit (Price does not include installation)		Pump, motor starter circuitry, 3-way valve, level sensor, hose barbs and logic control, fittings for splitting dilute water	$ 8,211.00

Quantity	Item Description	Part Number	Description	Price
	Accubatch™	110008945	Single phase electric system with salt tank, brine tank and stainless steel deflector shield.	$ 29,000.00

Freight: FOB Hebron, KY

STATE OF MICHIGAN
ENTERPRISE PROCUREMENT

Department of Technology, Management & Budget
525 W. Allegan Street Lansing, MI 48933
P.O. Box 30026 Lansing, MI 48909

NOTICE OF CONTRACT

NOTICE OF CONTRACT NO. **071B7700091**
between
THE STATE OF MICHIGAN
and

CONTRACTOR	
	Bell Equipment Company
	78 Northpointe Drive
	Lake Orion, MI 48359
	James Bell
	248-370-0000
	jbell@bellequip.com
	*****1706

STATE			
	Program Manager	Scott Poyer	MDOT
		517-284-6448	
		poyers@michigan.gov	
	Contract Administrator	Yvon Dufour	DTMB
		517-284-6996	
		dufoury@michigan.gov	

CONTRACT SUMMARY			
DESCRIPTION: Construction Equipment PURCHASE & RENTAL.			
INITIAL EFFECTIVE DATE	**INITIAL EXPIRATION DATE**	**INITIAL AVAILABLE OPTIONS**	**EXPIRATION DATE BEFORE CHANGE(S) NOTED BELOW**
1/13/2017	1/12/2021	2, one year	
PAYMENT TERMS		**DELIVERY TIMEFRAME**	
45 Days		45 to 120 days	
ALTERNATE PAYMENT OPTIONS			**EXTENDED PURCHASING**
☐ P-card ☐ Direct Voucher (DV) ☐ Other			☒ Yes ☐ No
MINIMUM DELIVERY REQUIREMENTS			
MISCELLANEOUS INFORMATION			
ESTIMATED CONTRACT VALUE AT TIME OF EXECUTION			**$2,500,000.00**

FOR THE CONTRACTOR:

Bell Equipment Company
Company Name

Authorized Agent Signature

Authorized Agent **(Print or Type)**

Date

FOR THE STATE:

Signature

Name & Title

Agency

Date

STATE OF MICHIGAN

STANDARD CONTRACT TERMS

This STANDARD CONTRACT ("**Contract**") is agreed to between the State of Michigan (the "**State**") and Bell Equipment Company ("**Contractor**"), a Michigan Corporation. This Contract is effective on January 13, 2017 ("**Effective Date**"), and unless terminated, expires on January 12, 2021.

This Contract may be renewed for up to two (2) additional one (1) year period(s). Renewal is at the sole discretion of the State and will automatically extend the Term of this Contract. The State will document its exercise of renewal options via Contract Change Notice.

The parties agree as follows:

1. **Duties of Contractor.** Contractor must perform the services and provide the deliverables described in **Schedule A – Statement of Work** (the "**Contract Activities**"). An obligation to provide delivery of any commodity is considered a service and is a Contract Activity.

   Contractor must furnish all labor, equipment, materials, and supplies necessary for the performance of the Contract Activities, and meet operational standards, unless otherwise specified in Schedule A.

   Contractor must: (a) perform the Contract Activities in a timely, professional, safe, and workmanlike manner consistent with standards in the trade, profession, or industry; (b) meet or exceed the performance and operational standards, and specifications of the Contract; (c) provide all Contract Activities in good quality, with no material defects; (d) not interfere with the State's operations; (e) obtain and maintain all necessary licenses, permits or other authorizations necessary for the performance of the Contract; (f) cooperate with the State, including the State's quality assurance personnel, and any third party to achieve the objectives of the Contract; (g) return to the State any State-furnished equipment or other resources in the same condition as when provided when no longer required for the Contract; (h) not make any media releases without prior written authorization from the State; (i) assign to the State any claims resulting from state or federal antitrust violations to the extent that those violations concern materials or services supplied by third parties toward fulfillment of the Contract; (j) comply with all State physical and IT security policies and standards which will be made available upon request; and (k) provide the State priority in performance of the Contract except as mandated by federal disaster response requirements. Any breach under this paragraph is considered a material breach.

   Contractor must also be clearly identifiable while on State property by wearing identification issued by the State, and clearly identify themselves whenever making contact with the State.

2. **Notices.** All notices and other communications required or permitted under this Contract must be in writing and will be considered given and received: (a) when verified by written receipt if sent by courier; (b) when actually received if sent by mail without verification of receipt; or (c) when verified by automated receipt or electronic logs if sent by facsimile or email.

If to State:	If to Contractor:
Yvon Dufour *525 W. Allegan,* *Constitution Hall, 1st Floor NE* *Lansing, MI 48933* *dufoury@michigan.gov* *(517) 284-6996*	James Bell - President 78 Northpointe Drive Lake Orion, MI 48359 jbell@bellequip.com (248) 370-0000 – Office (248) 705-1351 – Cell

3. **Contract Administrator.** The Contract Administrator for each party is the only person authorized to modify any terms of this Contract, and approve and execute any change under this Contract (each a "**Contract Administrator**"):

State:	Contractor:
Yvon Dufour *525 W. Allegan,* *Constitution Hall, 1st Floor NE* *Lansing, MI 48933* *dufoury@michigan.gov* *(517) 284-6996*	James Bell - President 78 Northpointe Drive Lake Orion, MI 48359 jbell@bellequip.com (248) 370-0000 – Office (248) 705-1351 – Cell

4. **Program Manager.** The Program Manager for each party will monitor and coordinate the day-to-day activities of the Contract (each a "**Program Manager**"):

State:	Contractor:
Scott Poyer *poyers@michigan.gov* *(517) 284-6448*	James Bell - President 78 Northpointe Drive Lake Orion, MI 48359 jbell@bellequip.com (248) 370-0000 – Office (248) 705-1351 – Cell

5. **Performance Guarantee**. Contractor must at all times have financial resources sufficient, in the opinion of the State, to ensure performance of the Contract and must provide proof upon request. The State may require a performance bond (as specified in Schedule A) if, in the opinion of the State, it will ensure performance of the Contract.

6. **Insurance Requirements.** Contractor must maintain the insurances identified below and is responsible for all deductibles. All required insurance must: (a) protect the State from claims that may arise out of, are alleged to arise out of, or result from Contractor's or a subcontractor's performance; (b) be primary and non-contributing to any comparable liability insurance (including self-insurance) carried by the State; and (c) be provided by a company with an A.M. Best rating of "A" or better, and a financial size of VII or better.

Required Limits	Additional Requirements
Commercial General Liability Insurance	
Minimal Limits: $1,000,000 Each Occurrence Limit $1,000,000 Personal & Advertising Injury Limit $2,000,000 General Aggregate Limit $2,000,000 Products/Completed Operations Deductible Maximum: $50,000 Each Occurrence	Contractor must have their policy endorsed to add "the State of Michigan, its departments, divisions, agencies, offices, commissions, officers, employees, and agents" as additional insureds using endorsement CG 20 10 11 85, or both CG 2010 07 04 and CG 2037 07 0.
Umbrella or Excess Liability Insurance	
Minimal Limits: $5,000,000 General Aggregate	Contractor must have their policy endorsed to add "the State of Michigan, its departments, divisions, agencies, offices, commissions, officers, employees, and agents" as additional insureds.
Automobile Liability Insurance	
Minimal Limits: $1,000,000 Per Occurrence	Contractor must have their policy: (1) endorsed to add "the State of Michigan, its

	departments, divisions, agencies, offices, commissions, officers, employees, and agents" as additional insureds; and (2) include Hired and Non-Owned Automobile coverage.
Workers' Compensation Insurance	
Minimal Limits: Coverage according to applicable laws governing work activities.	Waiver of subrogation, except where waiver is prohibited by law.
Employers Liability Insurance	
Minimal Limits: $500,000 Each Accident $500,000 Each Employee by Disease $500,000 Aggregate Disease.	

If any of the required policies provide **claims-made** coverage, the Contractor must: (a) provide coverage with a retroactive date before the effective date of the contract or the beginning of Contract Activities; (b) maintain coverage and provide evidence of coverage for at least three (3) years after completion of the Contract Activities; and (c) if coverage is canceled or not renewed, and not replaced with another claims-made policy form with a retroactive date prior to the contract effective date, Contractor must purchase extended reporting coverage for a minimum of three (3) years after completion of work.

Contractor must: (a) provide insurance certificates to the Contract Administrator, containing the agreement or purchase order number, at Contract formation and within 20 calendar days of the expiration date of the applicable policies; (b) require that subcontractors maintain the required insurances contained in this Section; (c) notify the Contract Administrator within 5 business days if any insurance is cancelled; and (d) waive all rights against the State for damages covered by insurance. Failure to maintain the required insurance does not limit this waiver.

This Section is not intended to and is not be construed in any manner as waiving, restricting or limiting the liability of either party for any obligations under this Contract (including any provisions hereof requiring Contractor to indemnify, defend and hold harmless the State).

7. **Administrative Fee and Reporting.** Contractor must pay an administrative fee of 2% on all payments made to Contractor under the Contract including transactions with the State (including its departments, divisions, agencies, offices, and commissions), MiDEAL members, and other states (including governmental subdivisions and authorized entities). Administrative fee payments must be made by check payable to the State of Michigan and mailed to:

   Department of Technology, Management and Budget
   Cashiering
   P.O. Box 30681
   Lansing, MI 48909

   Contractor must submit an itemized purchasing activity report, which includes at a minimum, the name of the purchasing entity and the total dollar volume in sales. Reports should be mailed to DTMB-Procurement.

   The administrative fee and purchasing activity report are due within 30 calendar days from the last day of each calendar quarter.

8. **Extended Purchasing Program.** This contract is extended to MiDEAL members. MiDEAL members include local units of government, school districts, universities, community colleges, and nonprofit hospitals. A current list of MiDEAL members is available at www.michigan.gov/mideal. Upon written agreement between the State and Contractor, this contract may also be extended to: (a) State of Michigan employees and (b) other states (including governmental subdivisions and authorized entities).

If extended, Contractor must supply all Contract Activities at the established Contract prices and terms. The State reserves the right to impose an administrative fee and negotiate additional discounts based on any increased volume generated by such extensions.

Contractor must submit invoices to, and receive payment from, extended purchasing program members on a direct and individual basis.

9. **Independent Contractor.** Contractor is an independent contractor and assumes all rights, obligations and liabilities set forth in this Contract. Contractor, its employees, and agents will not be considered employees of the State. No partnership or joint venture relationship is created by virtue of this Contract. Contractor, and not the State, is responsible for the payment of wages, benefits and taxes of Contractor's employees and any subcontractors. Prior performance does not modify Contractor's status as an independent contractor.

10. **Subcontracting.** Contractor may not delegate any of its obligations under the Contract without the prior written approval of the State. Contractor must notify the State at least 90 calendar days before the proposed delegation, and provide the State any information it requests to determine whether the delegation is in its best interest. If approved, Contractor must: (a) be the sole point of contact regarding all contractual matters, including payment and charges for all Contract Activities; (b) make all payments to the subcontractor; and (c) incorporate the terms and conditions contained in this Contract in any subcontract with a subcontractor. Contractor remains responsible for the completion of the Contract Activities, compliance with the terms of this Contract, and the acts and omissions of the subcontractor. The State, in its sole discretion, may require the replacement of any subcontractor.

11. **Staffing.** The State's Contract Administrator may require Contractor to remove or reassign personnel by providing a notice to Contractor.

12. **Background Checks.** Upon request, Contractor must perform background checks on all employees and subcontractors and its employees prior to their assignment. The scope is at the discretion of the State and documentation must be provided as requested. Contractor is responsible for all costs associated with the requested background checks. The State, in its sole discretion, may also perform background checks.

13. **Assignment.** Contractor may not assign this Contract to any other party without the prior approval of the State. Upon notice to Contractor, the State, in its sole discretion, may assign in whole or in part, its rights or responsibilities under this Contract to any other party. If the State determines that a novation of the Contract to a third party is necessary, Contractor will agree to the novation and provide all necessary documentation and signatures.

14. **Change of Control.** Contractor will notify, at least 90 calendar days before the effective date, the State of a change in Contractor's organizational structure or ownership. For purposes of this Contract, a change in control means any of the following: (a) a sale of more than 50% of Contractor's stock; (b) a sale of substantially all of Contractor's assets; (c) a change in a majority of Contractor's board members; (d) consummation of a merger or consolidation of Contractor with any other entity; (e) a change in ownership through a transaction or series of transactions; (f) or the board (or the stockholders) approves a plan of complete liquidation. A change of control does not include any consolidation or merger effected exclusively to change the domicile of Contractor, or any transaction or series of transactions principally for bona fide equity financing purposes.

    In the event of a change of control, Contractor must require the successor to assume this Contract and all of its obligations under this Contract.

15. **Ordering.** Contractor is not authorized to begin performance until receipt of authorization as identified in Schedule A.

16. **Acceptance.** Contract Activities are subject to inspection and testing by the State within 30 calendar days of the State's receipt of them ("**State Review Period**"), unless otherwise provided in Schedule A. If the Contract Activities are not fully accepted by the State, the State will notify Contractor by the end of the State Review Period that either: (a) the Contract Activities are accepted, but noted deficiencies must be corrected; or (b) the Contract Activities are rejected. If the State finds material deficiencies, it may: (i)

reject the Contract Activities without performing any further inspections; (ii) demand performance at no additional cost; or (iii) terminate this Contract in accordance with Section 23, Termination for Cause.

Within 10 business days from the date of Contractor's receipt of notification of acceptance with deficiencies or rejection of any Contract Activities, Contractor must cure, at no additional cost, the deficiency and deliver unequivocally acceptable Contract Activities to the State. If acceptance with deficiencies or rejection of the Contract Activities impacts the content or delivery of other non-completed Contract Activities, the parties' respective Program Managers must determine an agreed to number of days for re-submission that minimizes the overall impact to the Contract. However, nothing herein affects, alters, or relieves Contractor of its obligations to correct deficiencies in accordance with the time response standards set forth in this Contract.

If Contractor is unable or refuses to correct the deficiency within the time response standards set forth in this Contract, the State may cancel the order in whole or in part. The State, or a third party identified by the State, may perform the Contract Activities and recover the difference between the cost to cure and the Contract price plus an additional 10% administrative fee.

17. **Delivery.** Contractor must deliver all Contract Activities F.O.B. destination, within the State premises with transportation and handling charges paid by Contractor, unless otherwise specified in Schedule A. All containers and packaging becomes the State's exclusive property upon acceptance.

18. **Risk of Loss and Title.** Until final acceptance, title and risk of loss or damage to Contract Activities remains with Contractor. Contractor is responsible for filing, processing, and collecting all damage claims. The State will record and report to Contractor any evidence of visible damage. If the State rejects the Contract Activities, Contractor must remove them from the premises within 10 calendar days after notification of rejection. The risk of loss of rejected or non-conforming Contract Activities remains with Contractor. Rejected Contract Activities not removed by Contractor within 10 calendar days will be deemed abandoned by Contractor, and the State will have the right to dispose of it as its own property. Contractor must reimburse the State for costs and expenses incurred in storing or effecting removal or disposition of rejected Contract Activities.

19. **Warranty Period**. The warranty period, if applicable, for Contract Activities is a fixed period commencing on the date specified in Schedule A. If the Contract Activities do not function as warranted during the warranty period the State may return such non-conforming Contract Activities to the Contractor for a full refund.

20. **Terms of Payment.** Invoices must conform to the requirements communicated from time-to-time by the State. All undisputed amounts are payable within 45 days of the State's receipt. Contractor may only charge for Contract Activities performed as specified in Schedule A. Invoices must include an itemized statement of all charges. The State is exempt from State sales tax for direct purchases and may be exempt from federal excise tax, if Services purchased under this Agreement are for the State's exclusive use. Notwithstanding the foregoing, all prices are inclusive of taxes, and Contractor is responsible for all sales, use and excise taxes, and any other similar taxes, duties and charges of any kind imposed by any federal, state, or local governmental entity on any amounts payable by the State under this Contract.

    The State has the right to withhold payment of any disputed amounts until the parties agree as to the validity of the disputed amount. The State will notify Contractor of any dispute within a reasonable time. Payment by the State will not constitute a waiver of any rights as to Contractor's continuing obligations, including claims for deficiencies or substandard Contract Activities. Contractor's acceptance of final payment by the State constitutes a waiver of all claims by Contractor against the State for payment under this Contract, other than those claims previously filed in writing on a timely basis and still disputed.

    The State will only disburse payments under this Contract through Electronic Funds Transfer (EFT). Contractor must register with the State at http://www.michigan.gov/cpexpress to receive electronic fund transfer payments. If Contractor does not register, the State is not liable for failure to provide payment. Without prejudice to any other right or remedy it may have, the State reserves the right to set off at any time any amount then due and owing to it by Contractor against any amount payable by the State to Contractor under this Contract.

21. **Liquidated Damages.** Liquidated damages, if applicable, will be assessed as described in Schedule A.

22. **Stop Work Order.** The State may suspend any or all activities under the Contract at any time. The State will provide Contractor a written stop work order detailing the suspension. Contractor must comply with the stop work order upon receipt. Within 90 calendar days, or any longer period agreed to by Contractor, the State will either: (a) issue a notice authorizing Contractor to resume work, or (b) terminate the Contract or purchase order. The State will not pay for Contract Activities, Contractor's lost profits, or any additional compensation during a stop work period.

23. **Termination for Cause.** The State may terminate this Contract for cause, in whole or in part, if Contractor, as determined by the State: (a) endangers the value, integrity, or security of any location, data, or personnel; (b) becomes insolvent, petitions for bankruptcy court proceedings, or has an involuntary bankruptcy proceeding filed against it by any creditor; (c) engages in any conduct that may expose the State to liability; (d) breaches any of its material duties or obligations; or (e) fails to cure a breach within the time stated in a notice of breach. Any reference to specific breaches being material breaches within this Contract will not be construed to mean that other breaches are not material.

    If the State terminates this Contract under this Section, the State will issue a termination notice specifying whether Contractor must: (a) cease performance immediately, or (b) continue to perform for a specified period. If it is later determined that Contractor was not in breach of the Contract, the termination will be deemed to have been a Termination for Convenience, effective as of the same date, and the rights and obligations of the parties will be limited to those provided in Section 24, Termination for Convenience.

    The State will only pay for amounts due to Contractor for Contract Activities accepted by the State on or before the date of termination, subject to the State's right to set off any amounts owed by the Contractor for the State's reasonable costs in terminating this Contract. The Contractor must pay all reasonable costs incurred by the State in terminating this Contract for cause, including administrative costs, attorneys' fees, court costs, transition costs, and any costs the State incurs to procure the Contract Activities from other sources.

24. **Termination for Convenience.** The State may immediately terminate this Contract in whole or in part without penalty and for any reason, including but not limited to, appropriation or budget shortfalls. The termination notice will specify whether Contractor must: (a) cease performance of the Contract Activities immediately, or (b) continue to perform the Contract Activities in accordance with Section 25, Transition Responsibilities. If the State terminates this Contract for convenience, the State will pay all reasonable costs, as determined by the State, for State approved Transition Responsibilities.

25. **Transition Responsibilities.** Upon termination or expiration of this Contract for any reason, Contractor must, for a period of time specified by the State (not to exceed 120 calendar days), provide all reasonable transition assistance requested by the State, to allow for the expired or terminated portion of the Contract Activities to continue without interruption or adverse effect, and to facilitate the orderly transfer of such Contract Activities to the State or its designees. Such transition assistance may include, but is not limited to: (a) continuing to perform the Contract Activities at the established Contract rates; (b) taking all reasonable and necessary measures to transition performance of the work, including all applicable Contract Activities, training, equipment, software, leases, reports and other documentation, to the State or the State's designee; (c) taking all necessary and appropriate steps, or such other action as the State may direct, to preserve, maintain, protect, or return to the State all materials, data, property, and confidential information provided directly or indirectly to Contractor by any entity, agent, vendor, or employee of the State; (d) transferring title in and delivering to the State, at the State's discretion, all completed or partially completed deliverables prepared under this Contract as of the Contract termination date; and (e) preparing an accurate accounting from which the State and Contractor may reconcile all outstanding accounts (collectively, "**Transition Responsibilities**"). This Contract will automatically be extended through the end of the transition period.

26. **General Indemnification.** Contractor must defend, indemnify and hold the State, its departments, divisions, agencies, offices, commissions, officers, and employees harmless, without limitation, from and against any and all actions, claims, losses, liabilities, damages, costs, attorney fees, and expenses (including those required to establish the right to indemnification), arising out of or relating to: (a) any breach by Contractor (or any of Contractor's employees, agents, subcontractors, or by anyone else for whose acts any of them may be liable) of any of the promises, agreements, representations, warranties, or insurance requirements contained in this Contract; (b) any infringement, misappropriation, or other violation of any intellectual property right or other right of any third party; (c) any bodily injury, death, or damage to real or tangible personal property occurring wholly or in part due to action or inaction by

Contractor (or any of Contractor's employees, agents, subcontractors, or by anyone else for whose acts any of them may be liable); and (d) any acts or omissions of Contractor (or any of Contractor's employees, agents, subcontractors, or by anyone else for whose acts any of them may be liable).

The State will notify Contractor in writing if indemnification is sought; however, failure to do so will not relieve Contractor, except to the extent that Contractor is materially prejudiced. Contractor must, to the satisfaction of the State, demonstrate its financial ability to carry out these obligations.

The State is entitled to: (i) regular updates on proceeding status; (ii) participate in the defense of the proceeding; (iii) employ its own counsel; and to (iv) retain control of the defense if the State deems necessary. Contractor will not, without the State's written consent (not to be unreasonably withheld), settle, compromise, or consent to the entry of any judgment in or otherwise seek to terminate any claim, action, or proceeding. To the extent that any State employee, official, or law may be involved or challenged, the State may, at its own expense, control the defense of that portion of the claim.

Any litigation activity on behalf of the State, or any of its subdivisions under this Section, must be coordinated with the Department of Attorney General. An attorney designated to represent the State may not do so until approved by the Michigan Attorney General and appointed as a Special Assistant Attorney General.

27. **Infringement Remedies.** If, in either party's opinion, any piece of equipment, software, commodity, or service supplied by Contractor or its subcontractors, or its operation, use or reproduction, is likely to become the subject of a copyright, patent, trademark, or trade secret infringement claim, Contractor must, at its expense: (a) procure for the State the right to continue using the equipment, software, commodity, or service, or if this option is not reasonably available to Contractor, (b) replace or modify the same so that it becomes non-infringing; or (c) accept its return by the State with appropriate credits to the State against Contractor's charges and reimburse the State for any losses or costs incurred as a consequence of the State ceasing its use and returning it.

28. **Limitation of Liability.** The State is not liable for consequential, incidental, indirect, or special damages, regardless of the nature of the action.

29. **Disclosure of Litigation, or Other Proceeding.** Contractor must notify the State within 14 calendar days of receiving notice of any litigation, investigation, arbitration, or other proceeding (collectively, "**Proceeding**") involving Contractor, a subcontractor, or an officer or director of Contractor or subcontractor, that arises during the term of the Contract, including: (a) a criminal Proceeding; (b) a parole or probation Proceeding; (c) a Proceeding under the Sarbanes-Oxley Act; (d) a civil Proceeding involving: (1) a claim that might reasonably be expected to adversely affect Contractor's viability or financial stability; or (2) a governmental or public entity's claim or written allegation of fraud; or (e) a Proceeding involving any license that Contractor is required to possess in order to perform under this Contract.

30. **Reserved.**

31. **Reserved.**

32. **Non-Disclosure of Confidential Information**. The parties acknowledge that each party may be exposed to or acquire communication or data of the other party that is confidential, privileged communication not intended to be disclosed to third parties. The provisions of this Section survive the termination of this Contract.

    a. Meaning of Confidential Information. For the purposes of this Contract, the term "**Confidential Information**" means all information and documentation of a party that: (a) has been marked "confidential" or with words of similar meaning, at the time of disclosure by such party; (b) if disclosed orally or not marked "confidential" or with words of similar meaning, was subsequently summarized in writing by the disclosing party and marked "confidential" or with words of similar meaning; and, (c) should reasonably be recognized as confidential information of the disclosing party. The term "Confidential Information" does not include any information or documentation that was: (a) subject to disclosure under the Michigan Freedom of Information Act (FOIA); (b) already in the possession of the receiving party without an obligation of confidentiality; (c) developed independently by the receiving party, as demonstrated by the receiving party, without violating the disclosing party's proprietary rights; (d) obtained from a source other than the

disclosing party without an obligation of confidentiality; or, (e) publicly available when received, or thereafter became publicly available (other than through any unauthorized disclosure by, through, or on behalf of, the receiving party). For purposes of this Contract, in all cases and for all matters, State Data is deemed to be Confidential Information.

b. Obligation of Confidentiality. The parties agree to hold all Confidential Information in strict confidence and not to copy, reproduce, sell, transfer, or otherwise dispose of, give or disclose such Confidential Information to third parties other than employees, agents, or subcontractors of a party who have a need to know in connection with this Contract or to use such Confidential Information for any purposes whatsoever other than the performance of this Contract. The parties agree to advise and require their respective employees, agents, and subcontractors of their obligations to keep all Confidential Information confidential. Disclosure to a subcontractor is permissible where: (a) use of a subcontractor is authorized under this Contract; (b) the disclosure is necessary or otherwise naturally occurs in connection with work that is within the subcontractor's responsibilities; and (c) Contractor obligates the subcontractor in a written contract to maintain the State's Confidential Information in confidence. At the State's request, any employee of Contractor or any subcontractor may be required to execute a separate agreement to be bound by the provisions of this Section.

c. Cooperation to Prevent Disclosure of Confidential Information. Each party must use its best efforts to assist the other party in identifying and preventing any unauthorized use or disclosure of any Confidential Information. Without limiting the foregoing, each party must advise the other party immediately in the event either party learns or has reason to believe that any person who has had access to Confidential Information has violated or intends to violate the terms of this Contract and each party will cooperate with the other party in seeking injunctive or other equitable relief against any such person.

d. Remedies for Breach of Obligation of Confidentiality. Each party acknowledges that breach of its obligation of confidentiality may give rise to irreparable injury to the other party, which damage may be inadequately compensable in the form of monetary damages. Accordingly, a party may seek and obtain injunctive relief against the breach or threatened breach of the foregoing undertakings, in addition to any other legal remedies which may be available, to include, in the case of the State, at the sole election of the State, the immediate termination, without liability to the State, of this Contract or any Statement of Work corresponding to the breach or threatened breach.

e. Surrender of Confidential Information upon Termination. Upon termination of this Contract or a Statement of Work, in whole or in part, each party must, within 5 calendar days from the date of termination, return to the other party any and all Confidential Information received from the other party, or created or received by a party on behalf of the other party, which are in such party's possession, custody, or control; provided, however, that Contractor must return State Data to the State following the timeframe and procedure described further in this Contract. Should Contractor or the State determine that the return of any Confidential Information is not feasible, such party must destroy the Confidential Information and must certify the same in writing within 5 calendar days from the date of termination to the other party. However, the State's legal ability to destroy Contractor data may be restricted by its retention and disposal schedule, in which case Contractor's Confidential Information will be destroyed after the retention period expires.

33. Reserved.

34. Reserved.

35. Reserved.

36. Records Maintenance, Inspection, Examination, and Audit. The State or its designee may audit Contractor to verify compliance with this Contract. Contractor must retain, and provide to the State or its designee and the auditor general upon request, all financial and accounting records related to the Contract through the term of the Contract and for 4 years after the latter of termination, expiration, or final payment under this Contract or any extension ("**Audit Period**"). If an audit, litigation, or other action involving the records is initiated before the end of the Audit Period, Contractor must retain the records until all issues are resolved.

Within 10 calendar days of providing notice, the State and its authorized representatives or designees have the right to enter and inspect Contractor's premises or any other places where Contract Activities are being performed, and examine, copy, and audit all records related to this Contract. Contractor must cooperate and provide reasonable assistance. If any financial errors are revealed, the amount in error must be reflected as a credit or debit on subsequent invoices until the amount is paid or refunded. Any remaining balance at the end of the Contract must be paid or refunded within 45 calendar days.

This Section applies to Contractor, any parent, affiliate, or subsidiary organization of Contractor, and any subcontractor that performs Contract Activities in connection with this Contract.

37. **Warranties and Representations.** Contractor represents and warrants: (a) Contractor is the owner or licensee of any Contract Activities that it licenses, sells, or develops and Contractor has the rights necessary to convey title, ownership rights, or licensed use; (b) all Contract Activities are delivered free from any security interest, lien, or encumbrance and will continue in that respect; (c) the Contract Activities will not infringe the patent, trademark, copyright, trade secret, or other proprietary rights of any third party; (d) Contractor must assign or otherwise transfer to the State or its designee any manufacturer's warranty for the Contract Activities; (e) the Contract Activities are merchantable and fit for the specific purposes identified in the Contract; (f) the Contract signatory has the authority to enter into this Contract; (g) all information furnished by Contractor in connection with the Contract fairly and accurately represents Contractor's business, properties, finances, and operations as of the dates covered by the information, and Contractor will inform the State of any material adverse changes; and (h) all information furnished and representations made in connection with the award of this Contract is true, accurate, and complete, and contains no false statements or omits any fact that would make the information misleading. A breach of this Section is considered a material breach of this Contract, which entitles the State to terminate this Contract under Section 23, Termination for Cause.

38. **Conflicts and Ethics.** Contractor will uphold high ethical standards and is prohibited from: (a) holding or acquiring an interest that would conflict with this Contract; (b) doing anything that creates an appearance of impropriety with respect to the award or performance of the Contract; (c) attempting to influence or appearing to influence any State employee by the direct or indirect offer of anything of value; or (d) paying or agreeing to pay any person, other than employees and consultants working for Contractor, any consideration contingent upon the award of the Contract. Contractor must immediately notify the State of any violation or potential violation of these standards. This Section applies to Contractor, any parent, affiliate, or subsidiary organization of Contractor, and any subcontractor that performs Contract Activities in connection with this Contract.

39. **Compliance with Laws.** Contractor must comply with all federal, state and local laws, rules and regulations.

40. **Reserved.**

41. **Reserved.**

42. **Nondiscrimination.** Under the Elliott-Larsen Civil Rights Act, 1976 PA 453, MCL 37.2101, *et seq*., and the Persons with Disabilities Civil Rights Act, 1976 PA 220, MCL 37.1101, *et seq*., Contractor and its subcontractors agree not to discriminate against an employee or applicant for employment with respect to hire, tenure, terms, conditions, or privileges of employment, or a matter directly or indirectly related to employment, because of race, color, religion, national origin, age, sex, height, weight, marital status, or mental or physical disability. Breach of this covenant is a material breach of this Contract.

43. **Unfair Labor Practice.** Under MCL 423.324, the State may void any Contract with a Contractor or subcontractor who appears on the Unfair Labor Practice register compiled under MCL 423.322.

44. **Governing Law.** This Contract is governed, construed, and enforced in accordance with Michigan law, excluding choice-of-law principles, and all claims relating to or arising out of this Contract are governed by Michigan law, excluding choice-of-law principles. Any dispute arising from this Contract must be resolved in Michigan Court of Claims. Contractor consents to venue in Ingham County, and waives any objections, such as lack of personal jurisdiction or *forum non conveniens*. Contractor must appoint agents in Michigan to receive service of process.

45. **Non-Exclusivity.** Nothing contained in this Contract is intended nor will be construed as creating any requirements contract with Contractor. This Contract does not restrict the State or its agencies from acquiring similar, equal, or like Contract Activities from other sources.

46. **Force Majeure.** Neither party will be in breach of this Contract because of any failure arising from any disaster or acts of god that are beyond their control and without their fault or negligence. Each party will use commercially reasonable efforts to resume performance. Contractor will not be relieved of a breach or delay caused by its subcontractors. If immediate performance is necessary to ensure public health and safety, the State may immediately contract with a third party.

47. **Dispute Resolution.** The parties will endeavor to resolve any Contract dispute in accordance with this provision. The dispute will be referred to the parties' respective Contract Administrators or Program Managers. Such referral must include a description of the issues and all supporting documentation. The parties must submit the dispute to a senior executive if unable to resolve the dispute within 15 business days. The parties will continue performing while a dispute is being resolved, unless the dispute precludes performance. A dispute involving payment does not preclude performance.

    Litigation to resolve the dispute will not be instituted until after the dispute has been elevated to the parties' senior executive and either concludes that resolution is unlikely, or fails to respond within 15 business days. The parties are not prohibited from instituting formal proceedings: (a) to avoid the expiration of statute of limitations period; (b) to preserve a superior position with respect to creditors; or (c) where a party makes a determination that a temporary restraining order or other injunctive relief is the only adequate remedy. This Section does not limit the State's right to terminate the Contract.

48. **Media Releases.** News releases (including promotional literature and commercial advertisements) pertaining to the Contract or project to which it relates must not be made without prior written State approval, and then only in accordance with the explicit written instructions of the State.

49. **Website Incorporation.** The State is not bound by any content on Contractor's website unless expressly incorporated directly into this Contract.

50. **Entire Agreement and Order of Precedence.** This Contract, which includes Schedule A – Statement of Work, and expressly incorporated schedules and exhibits, is the entire agreement of the parties related to the Contract Activities. This Contract supersedes and replaces all previous understandings and agreements between the parties for the Contract Activities. If there is a conflict between documents, the order of precedence is: (a) first, this Contract, excluding its schedules, exhibits, and Schedule A – Statement of Work; (b) second, Schedule A – Statement of Work as of the Effective Date; and (c) third, schedules expressly incorporated into this Contract as of the Effective Date. NO TERMS ON CONTRACTOR'S INVOICES, ORDERING DOCUMENTS, WEBSITE, BROWSE-WRAP, SHRINK-WRAP, CLICK-WRAP, CLICK-THROUGH OR OTHER NON-NEGOTIATED TERMS AND CONDITIONS PROVIDED WITH ANY OF THE CONTRACT ACTIVITIES WILL CONSTITUTE A PART OR AMENDMENT OF THIS CONTRACT OR IS BINDING ON THE STATE FOR ANY PURPOSE. ALL SUCH OTHER TERMS AND CONDITIONS HAVE NO FORCE AND EFFECT AND ARE DEEMED REJECTED BY THE STATE, EVEN IF ACCESS TO OR USE OF THE CONTRACT ACTIVITIES REQUIRES AFFIRMATIVE ACCEPTANCE OF SUCH TERMS AND CONDITIONS.

51. **Severability.** If any part of this Contract is held invalid or unenforceable, by any court of competent jurisdiction, that part will be deemed deleted from this Contract and the severed part will be replaced by agreed upon language that achieves the same or similar objectives. The remaining Contract will continue in full force and effect.

52. **Waiver.** Failure to enforce any provision of this Contract will not constitute a waiver.

53. **Survival.** The provisions of this Contract that impose continuing obligations, including warranties and representations, termination, transition, insurance coverage, indemnification, and confidentiality, will survive the expiration or termination of this Contract.

54. **Contract Modification.** This Contract may not be amended except by signed agreement between the parties (a "**Contract Change Notice**"). Notwithstanding the foregoing, no subsequent Statement of Work or Contract Change Notice executed after the Effective Date will be construed to amend this Contract unless it specifically states its intent to do so and cites the section or sections amended.

STATE OF MICHIGAN

Contract No. 071B7700091
Agricultural, Grounds, Turf, Earth Moving, and Roadside Maintenance Equipment

SCHEDULE A
STATEMENT OF WORK
CONTRACT ACTIVITIES

This schedule identifies the requirements of this Contract.

This contract includes equipment for PURCHASE & RENTAL.

The Contractor must provide deliverables, including the staffing to accomplish all service incidentals necessary to complete the work, as set forth in this contract.

REQUIREMENTS
SCOPE OF WORK
1. Specifications **1.1 The Contractor must provide the following Equipment for purchase, rent, and/or lease per Schedule B, Specifications:** **FOR PURCHASE** **Awarded:** **22. C62-0051-16 Street Sweeper** **Not Awarded:** **10. C36-0401-4T-16 Asphalt Heater-Hauler** **21. C60-2001-16 Sand-Salt Spreader** **FOR RENTAL** **Awarded:** **21. C60-2001-16 Sand-Salt Spreader** **22. C62-0051-16 Street Sweeper** **Not Awarded:** **10. C36-0401-4T-16 Asphalt Heater-Hauler**

A. EQUIPMENT FOR PURCHASE

1. Warranties

a) Contractor shall provide a one (1) year warranty on parts and labor or the manufacturer's warranty, whichever is greater.

b) The State shall report a warranty claim with the Contractor. The Contractor shall arrange for warranty service.

c) The State reserves the right to require additional warranties.

2. Recall Requirements and Procedures

The Contractor shall notify the State and/or the ordering entity within 48 hours of a recall notice.

3. Service Levels

3.1 Time Frames

a) All Contract Activities must be delivered within **120** calendar days from receipt of order. The receipt of order date is pursuant to Section 2, Notice provisions of the Standard Contract Terms.

3.2 Delivery

Delivery will be expected within **120** calendar days for special orders and out of stock items, and **30** calendar days for in-stock items, upon date of order. Delivery will be made to the requested location and shall be F.O.B. Delivered or charged on a mileage rate or a one-time charge by Region (see **Schedule D – Prosperity Regions**) per **Schedule E1 - Pricing.**

F.O.B. Delivered Items

Prices shall be quoted "F.O.B. Delivered" with transportation charges prepaid on ALL orders for State of Michigan and Extended Purchasing Participants. These terms apply to **ALL** locations in the State of Michigan. Other F.O.B. terms will not be accepted and may disqualify a dealer from further consideration.

Freight Charges - Should an Agency order items that are below the minimum order requirement of the Contract, or should a Contractor quote F.O.B. Shipping Point on one-time purchases, the Contractor should choose the most economically advantageous carrier and must be approved by the using agency.

United Parcel Service (UPS) must be used in instances where the weight of the shipment is less than 150 lbs., or where shipments could be separated into smaller parcels such as three (3) 50 lb. packages.

If the Contractor fails to follow these shipping instructions, the State shall pay the shipping costs on the Contractor's invoice, minus the difference for the amount that was charged and the amount that would have been charged if the requested carrier had been used. The State reserves the right to arrange their own freight.

3.3 Training

The Contractor must provide the following training:

a) A comprehensive orientation training shall be provided at delivery or at an alternate time requested by the State. The training shall include equipment operation, maintenance, and inspection practices.

b) Upon request, the Contractor shall provide 8 hours of mechanics and operators training for up to eight (8) employees. The training is to be held at each ship to address. The Contractor shall provide unit pricing for training in **Schedule E1, Pricing.**

B. *RENTAL/LEASE EQUIPMENT*

1. Specifications

a) The Contractor shall provide equipment for rental and/or lease that is similar in scope to equipment included in **Schedule B, Specifications**.

Brand or trade names referred to herein are for identification purposes only, and do not limit the Contractor to such brands, provided alternates offered are equal in quality and function to those specified.

b) In addition, the Contractor shall provide a complete list of equipment available for rental and/or lease by category (e.g. loaders, dozers, sweepers, etc.) in **Schedule E1 – Pricing, Catalog Pricing for Rental.**

The list shall include:

i. Daily, weekly, and monthly rental/lease rates.

ii. Percentage discount offered by category for such rates.

iii. Only listed items that meet these requirements shall be included under this contract.

c) All rental/leased equipment is to meet or exceed applicable federal and state safety standards as mandated by OSHA, and MIOSHA Motor Carrier Division. This equipment is to meet or exceed applicable American National Standards Institute (ANSI) specifications. The Contractor will provide written documentation guaranteeing compliance with all safety standards.

d) The Contractor shall provide written documentation confirming satisfactory testing on equipment where mandated by law (to include but not limited to: stress testing, dielectric testing, visual inspections) completed by a licensed and reputable testing firm.

Rental equipment shall be no more than four (4) years old. Equipment leased shall be the newest model year.

2. Availability and Delivery of Equipment

a) Rental and Lease Equipment shall be available statewide. Statewide availability includes **ALL** locations of the Upper and Lower Peninsula.

b) All requested orders must be delivered within two (2) calendar days/48 hours after receipt of order.

c) Emergencies will be responded to within one (1) to six (6) hours. Equipment shall be available as both F.O.B. delivered and F.O.B. pick-up.

d) No premium rates will be charged for delivery after normal business hours.

e) Rental or leased equipment items shall be fully fueled and operational at the time of pick-up or delivery.

f) The Contractor will be required to perform a walk-around equipment inspection at the time of delivery and pickup.

g) The Contractor, or their Designee and the Program Manager or their Designee, shall document the inspection by mutual execution of an inspection document provided by the Contractor.

The State is responsible for refueling all rented equipment upon its return.

3. Maintenance/Service

a) The Contractor will be responsible for all maintenance/service necessary to maintain satisfactory operation of rental equipment at no cost to the State.

b) Equipment shall be serviced according to manufacturer specifications. The Contractor shall maintain an equipment Schedule Eor service and retain complete lifetime service records for all equipment.

c) If a repair is needed, and requires the piece of equipment to be out of service, the Contractor shall provide a replacement acceptable to the State.

d) Contractor will maintain a Dedicated Product Support Department to ensure proper function of rented or leased equipment.

On-site maintenance must be performed according the recommended manufacturer maintenance schedule.

4. Training

The Contractor must provide the following training:

An orientation training shall be provided upon request at the time of delivery. The training shall be deemed sufficient by the State, to include detailed equipment operation and minor maintenance and inspection practices.

C. *GENERAL REQUIREMENTS*

1.1 Incentives

The Contractor provides the following special incentives or services:

a) **Trade-In Policy** – The contractor will provide trade-in service.

2.1 Technical Support and Repairs
When providing technical support, the Call Center must resolve the caller's issue within **30** minutes. If the caller's issue cannot be resolved within **2** hours, on-site service must be scheduled. The on-site service must be performed within **36** hours of the time the issue was scheduled for service.

2.2 Reporting
If applicable, the Contractor must submit, to the Contract Administrator or their designee, the following written reports:

a) *Maintenance/service report*
b) *Regional rental report*
c) *Regional purchase report*

By the second Friday of every December, the Contractor must submit a report of recycled content in commodities sold in that calendar year to **the Contract Administrator or Designee.**

2.3 Meetings
The Contractor must attend the following meetings:

a) Kick-off meeting within 30 calendar days of the Effective Date.

b) The State may request other meetings, as it deems appropriate.

3. Staffing

3.1 Contractor Representative
The Contractor must appoint a Product Representative, specifically assigned to State of Michigan accounts, that will respond to State inquiries regarding the Contract Activities, answering questions related to ordering and delivery, etc. (the "Contractor Representative").

Bell Equipment Company
James Bell - President
Office: (248) 370-0000
Mobile: (248) 705-1351
jbell@bellequip.com

The Contractor must notify the Contract Administrator at least **30** calendar days before removing or assigning a new Contractor Representative.

3.2 Customer Service Toll-Free Number
The Contractor must specify its toll-free number for the State to make contact with the Contractor Representative. The Contractor Representative must be available for calls during the hours of 8 am to 5 pm EST.

(866) 597-0716

3.3 Technical Support, Repairs and Maintenance
The Contractor must specify its toll-free number for the State to make contact with the Contractor for technical support, repairs, and maintenance. The Contractor must be available for calls and service during the hours of 8 am to 5 pm EST.

(866) 597-0716

3.4 Disclosure of Subcontractors
If the Contractor intends to utilize subcontractors, the Contractor must disclose the following:

a) The legal business name; address; telephone number; a description of subcontractor's organization and the services it will provide; and information concerning subcontractor's ability to provide the Contract Activities.

b) The relationship of the subcontractor to the Contractor.

c) Whether the Contractor has a previous working experience with the subcontractor. If yes, provide the details of that previous relationship.

d) A complete description of the Contract Activities that will be performed or provided by the subcontractor.

e) The price of the subcontractor's work.

3.5 Security
The Contractor's staff may be required to make deliveries to or enter State facilities. The Contractor must:

a) Drivers must wear uniforms with company logo and ID badges.

4. Pricing

4.1 Price Term

a) Pricing is firm for a 365 day period ("Pricing Period"). The first pricing period begins on the Effective Date. Adjustments may be requested, in writing, by either party and will take effect no earlier than the next Pricing Period. The State reserves the right to adjust the pricing period and allow automatic updates with limitations.

b) Pricing on all items listed in **Schedule B, Specifications** (or approved alternates) shall be firm-fixed. All remaining items within Contractor's **"catalog"** shall be available at a firm-fixed discount. All **"catalog"** pricing must be published and available at all times via website access, and/or electronic/printed price pages. Price quotes issued from the Contractor to the State must be verifiable via published pricing. The State reserves the right to limit "catalog" items at any time for any reason. It is expected the Contractor's Catalog items shall provide the best prices available to the State at all times and be firm-fixed. The State may remove items from the "Catalog" at any time without cause.

4.2 Price Changes

a) Adjustments will be based on changes in actual Contractor costs. Any request must be supported by written evidence documenting the change in costs. The State may consider sources, such as the Consumer Price Index; Producer Price Index; other pricing indices as needed; economic and industry data; manufacturer or supplier letters noting the increase in pricing; and any other data the State deems relevant.

b) Following the presentation of supporting documentation, both parties will have 30 days to review the information and prepare a written response. If the review reveals no need for modifications, pricing will remain unchanged unless mutually agreed to by the parties. If the review reveals that changes are needed, both parties will negotiate such changes, for no longer than 30 days, unless extended by mutual agreement.

c) The Contractor remains responsible for Contract Activities at the current price for all orders received before the mutual execution of a Change Notice indicating the start date of the new Pricing Period.

5. Ordering

5.1 Authorizing Document

The appropriate authorizing document for the Contract will be a purchase order.

5.2 Order Verification

The Contractor must have internal controls, to verify abnormal orders and to ensure that only authorized individuals place orders.

6. Acceptance

6.1 Acceptance, Inspection and Testing

The State will use the following criteria to determine acceptance of the Contract Activities:

a) Purchased equipment shall be delivered in new condition. Damaged equipment will not be accepted. The Contractor will repair or replace the damaged equipment at the Contractor's expense.

b) The Contractor shall provide documentation upon delivery that provides itemized deliverables.

c) Acceptance is not complete for partial deliveries until final deliverables are received.

6.2 Final Acceptance

a) The Contractor shall deliver the equipment. The State, or their designee, shall inspect the equipment and approve acceptance of goods upon delivery.

b) All set-up and/or training and orientation shall be completed.

7. Invoice and Payment

7.1 Invoice Requirements

All invoices submited to the State must include: (a) date; (b) purchase order; (c) quantity; (d) itemized description of the Contract Activities; (e) unit price; (f) shipping cost (if any); (g) total price; and (h) contract number.

8. Payment Methods

The State will make payment for Contract Activities by EFT as outlined in section 20 of Standard Contract Terms.

9. Additional Requirements

9.1 Environmental and Energy Efficient Products

The Contractor must include any relevant third-party certification, including the verification of a United States department of agriculture certified bio based product label.
The Contractor shall identify any energy efficient, bio-based, or otherwise environmental friendly products used in their products to the Program Manager (PM) 2 weeks prior to delivery.

9.2 Recycled Content and Recyclability Deliverable(s).

Without compromising performance or quality, the State prefers Deliverable(s) containing higher percentages of recycled materials. The Contractor must indicate an estimate of the percentage of recycled materials, if any, contained in each Deliverable:

- (total estimated percentage of recovered material)
- (estimated percentage of post-consumer material)
- (estimated percentage of post-industrial waste)

9.3 Hazardous Chemical Identification

In accordance with the federal Emergency Planning and Community Right-to-Know Act, 42 USC 11001, *et seq.*, as amended, the Contractor must provide a Safety Data Sheet (SDS) listing any hazardous chemicals, as defined in 40 CFR §370.2, to be delivered. Each hazardous chemical must be properly identified, including any applicable identification number, such as a National Stock Number or Special Item Number.
The Contractor must identify any hazardous chemicals that will be provided under any resulting contract.

The Contractor shall provide all current SDS to the Program Manager (PM) 2 weeks prior to delivery.

9.4 Mercury Content

Pursuant to MCL 18.1261d, mercury-free products must be procured when possible. The Contractor must explain if it intends to provide products containing mercury, the amount or concentration of mercury, and whether cost competitive alternatives exist. If a cost competitive alternative does exist, the Contractor must provide justification as to why the particular product is essential. All products containing mercury must be labeled as containing mercury.
The Contractor shall report if it intends to provide products containing mercury to the Program Manager (PM) no later than 48 hours after a purchase order is issued.

9.5 Brominated Flame Retardants

The State prefers to purchase products that do not contain brominated flame retardants (BFRs) whenever possible. The Contractor must disclose whether the products contain BFRs.
The Contractor must disclose to the Program Manager (PM) whether their products contain BFRs no later than 48 hours after a purchase order is issued.

9.6 Key Personnel

The Contractor must appoint one individual(s) who will be directly responsible for the day-to-day operations of the Contract ("Key Personnel"). Key Personnel must be specifically assigned to the State account, be knowledgeable on the contractual requirements, and respond to State inquires within 8 hours.

James Bell - President & Owner
Bell Equipment Company
78 Northpointe Drive
Lake Orion, MI 48359
Office: (248) 370-0000
Mobile: (248) 705-1351
jbell@bellequip.com

The Contractor may not remove or assign Key Personnel without the prior consent of the State. Prior consent is not required for reassignment for reasons beyond the Contractor's control, including illness, disability, death, leave of absence, personal emergency circumstances, resignation, or termination for cause. The State may request a résumé and conduct an interview before approving a change. The State may require a 30 calendar day training period for replacement personnel.

9.8 Organizational Chart

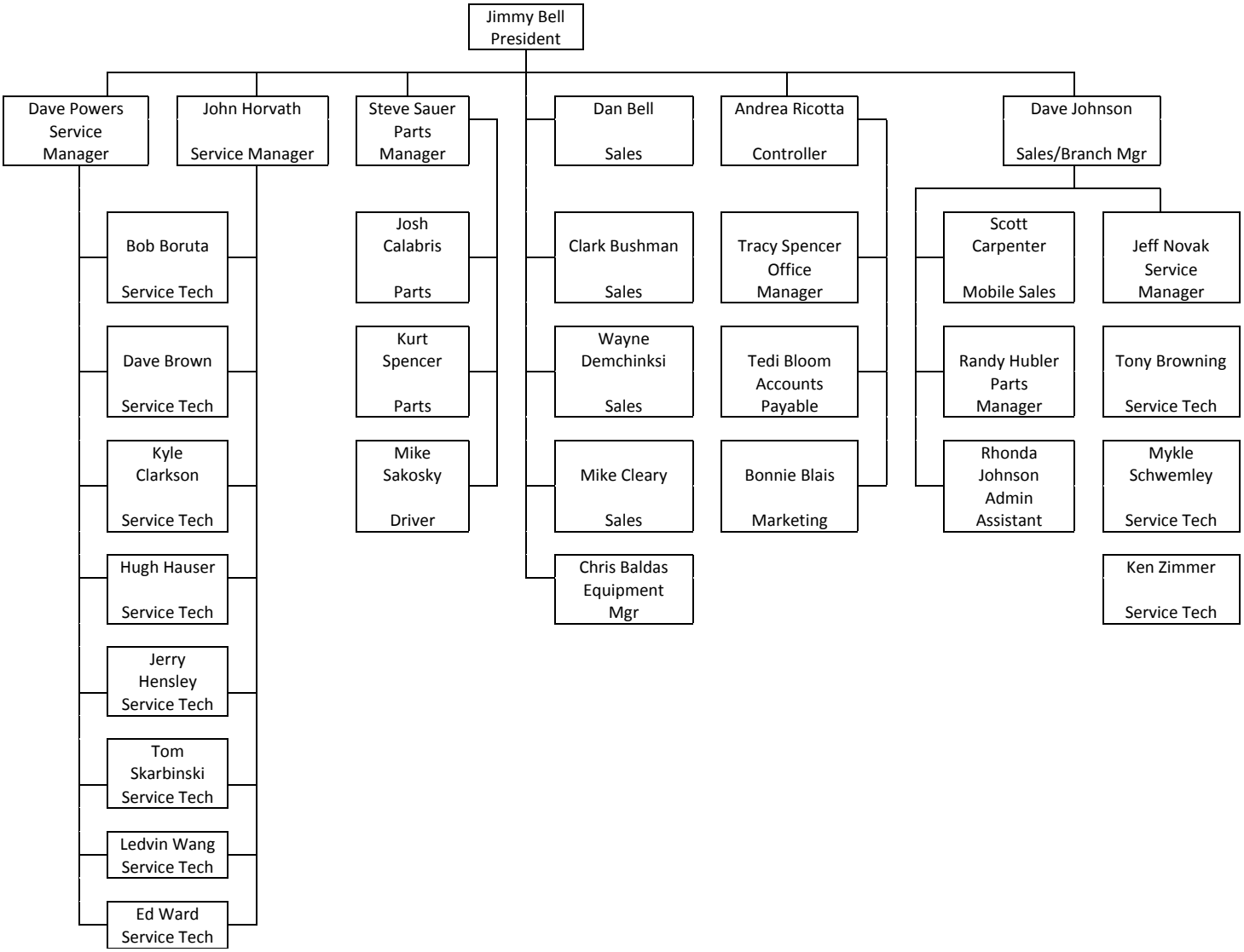

10. Invoice Credits

Late or improper completion of the Contract Activities will cause loss and damage to the State and Extending Purchasing Participants and it would be impracticable and extremely difficult to fix the actual damage sustained by the State and/or Extending Purchasing Participants. Therefore, if there is late or improper completion of the Contract Activities, the State, and the Ordering Entity are entitled to collect invoice credits in the amount of 2/10th of 1% of the Purchase Order for each day the Contractor fails to remedy the late or improper completion of the Work.

11. Liquidated Damages

Unauthorized Removal of Key Personnel will interfere with the timely and proper completion of the Contract, to the loss and damage of the State, and it would be impracticable and extremely difficult to fix the actual damage sustained by the State. Therefore, the State may assess liquidated damages against Contractor as specified below.

The State is entitled to collect $500 per individual per day for the removal of any Key Personnel without prior approval of the State.

The State is entitled to collect $500 per individual per day for an unapproved or untrained key personnel replacement.

STATE OF MICHIGAN

Contract No. 071B7700091

Agricultural, Grounds, Turf, Earth Moving, and Roadside Maintenance Equipment

SCHEDULE B
SPECIFICATIONS

Equipment - Purchase and Rental	
	SPEC SECTION
10	**C36-0401-4T-16 Asphalt Heater-Hauler**
21	**C60-2001-16 Sand-Salt Spreader**
22	**C62-0051-16 Street Sweeper**

10. - Spec. No. 36-0401-4T-16		
HEATER, ASPHALT STORAGE, FOUR (4) TON, TRAILER TYPE, DIESEL FIRED, TANDEM AXLE		
1.0 HEATER/HAULER		
1.1	Heater/hauler shall be tandem axle trailer mounted type with four (4) ton material capacity	YES
1.2	Clearance, running, stop, tail, and turn lights shall be LED type	YES
1.3	Stop and tail lights shall be four (4) light system, stop to be independent of tail lights, 50 inch mounting height	YES
1.4	Pintle type hitch, 3 inch ring, height adjustable between18 inches and 24 inches	YES
1.5	Safety chains with clip hooks shall be providedwhich meet or exceed GVW	YES
1.6	Per Schedule E - Trailer Wiring Diagram, trailer connector shall be 7-way round pin Berg type , mounted at rear of frame, wired for turn signals independent of stop, compatible with trailers that have amber or side turn lamps, provided and installed by vendor	YES
1.7	Axles shall be heavy wall, 7,000 pound GVWR with electric trailer brakes, including breakaway	YES
1.8	Springs shall be 2 inch wide double eye leaf type	YES
1.9	Tires shall be heavy duty commercial to meet GVWR	YES
1.10	7,000 pound parking jack with caster wheel shall be provided	YES
1.11	Trailer frame shall be 6 inch x 2 inch x 3/16 inch rectangular tubing and10 inch x 15.3 pound channel	YES
1.12	All welds shall be continuous	YES
1.13	Ground clearance shall be 17 inches to bottom of frame	YES
1.14	Fenders shall be back plated, 10 gauge steel, and bolted on	YES
1.15	Eight (8) crossmembers shall be on the horizontal and four (4) on the vertical	YES
1.16	¼ inch gussets to reinforce burner box and floor	YES
2.0 HOPPER		
2.1	Hopper shall be four (4) ton capacity, triple wall,low profile construction	YES
2.2	1 ½ inch space between material and air walls	YES
2.3	1 ½ inch space between air and insulation walls	YES
2.4	Insulated wall chambers shall hold 2 inches of high heat temperature insulation secure	YES
2.5	Air baffles shall circulate heat	YES
2.6	Center wall heat duct shall be angled inside of hopper	YES
2.7	All panel walls shall be one (1) piece construction	YES
2.8	Inner walls shall be 10 gauge, baffled	YES
2.9	Middle walls shall be 12 gauge, baffled	YES
2.10	Outer walls shall be 14 gauge, screwed to middle with screw heads removable at outer wall	YES
2.11	Heat chambers under floor shall be ¼ inch plate, baffled	YES
2.12	Full hopper access from ground	YES
2.13	Heat shall radiate from front to back and side to side	YES
2.14	Replaceable work table shall be 28 inches from ground	YES
2.15	All corners shall be reinforced with 3 inch overwrap	YES
2.16	One 21 ½ inch x 33 ¾ inch insulated door opening with handle to open with one hand slide	YES

2.17	Open and close latch shall be spring loaded and bolted on	YES
2.18	There shall be an automatic lock action	YES
2.19	Door opening shall provide full access to 51 inches of¼ inch plate floor for removing asphalt with shovel from ground level	YES
2.20	Capped corner shall have more continuous welds	YES
2.21	Two top loading doors shall be 18 gauge top and bottom,insulated, ¾ bore bearing hinged and bolted	YES
2.22	18 gauge outer skins framed on 1-1/4 inch square tubing with angle iron reinforced cross members	YES
2.23	Doors shall have removable, manually retractable, centered handles constructed of ¾ inch schedule 80 pipe	YES
2.24	7 inch grab handles shall be solid round stock with no open ends	YES
2.25	Bolt on safety latch with ball pin for side loading doors shall be provided	YES
2.26	7 inch grab handles shall be solid round stock with no open ends	YES
2.27	50°F – 500°F thermometer shall be located in back hopper	
3.0 HEATING SYSTEM		
3.1	Diesel fuel burner with spark ignition and fuel solenoids powered by 12v system, 105,000BTU	YES
3.2	Automatic recycle on spark system shall be provided	YES
3.3	Fuel for burner shall be controlled by a pressure pump and pressure gauge	YES
3.4	Burner shall be mounted inside of a bolt-on guard box with inspection lid	YES
3.5	A removable bottom drop box insulated with an inspection cover shall be provided	YES
3.6	Fuel tank shall be 30 gallon capacity with spin-on 20 micron inline filter	YES
3.7	Combustion chamber of approximately 100 square inches shall be bolted to the front of hopper	YES
3.8	A stainless steel insert with ceramic wool insulation and removable top cover of combustion chamber for replacement of liner	YES
3.9	Chamber shall be connected to a burner box of 10 inch channel with three (3) cross members 34 inches wide x 51 inches long	YES
4.0 CONTROLS		
4.1	Automatic shut down safety system shall be Cad cell eye control for flame in burner	YES
4.2	Spark ignition coil supply to electrodes shall ignite fuel	YES
4.3	Control shall be by a 1/16 Din microprocessor-based auto temp control	YES
4.4	Deep cycle battery shall be set in battery box ready for recharge	YES
4.5	Automatic temperature control heat system with temperature range of 0°F to 350°F shall be provided	YES
4.6	Burner shall automatically turn on and off as heat is required	YES
4.7	Power switch and digital snap in thermostat shall be in a nema 3r lockable box bolted on hopper	YES
5.0 PAINT		
5.1	Heaters shall have two (2) coats orange to match Dupont IMRON #43106-U or equal	YES
5.2	All wiring, switches, nema boxes, pumps, hoses, etc.,shall not be painted	YES
5.3	All bolt on parts shall be disassembled before painting	YES
5.4	All parts, trailer, and hopper shall be sanded and ground smooth of sharp edges, two (2) coats of primer on entire unit	YES
6.0 ACCESSORIES		
6.1	A solvent tank for shovels shall be located on back fender next to access door, bolted on, 8 gallon minimum capacity, for two (2)shovels	YES
6.2	Solvent tank shall have snap bolt top with spring bolt automatic lock drop, spill proof lid, 12 gauge or anti-splash curtain	YES
HEATER, ASPHALT STORAGE, FOUR (4) TON, TRAILER TYPE, DIESEL FIRED, TANDEM AXLE		
Make Offered:		**Spaulding**
Model Offered:		**4TLRMV**

21. - Spec. No. C60-2001-16

Combination Spreader with High Speed Anti Icing

1.1	It is the intent of this specification to provide a slide in type hopper box material spreader to uniformly spread salt, sand or a combination of both for treatment of icy roads. The spreader shall have the capacity for liquid per-wetting nd high speed ant icing. The operation of the spreader will be controlled by a ground speed oriented hydraulic system. MDOT will install this spreader in a 64,000 GVW tandem axle truck with 14 foot dump box and a closed center load sensing hydraulic system.	YES
1.2	Make: E-Poke or approved alternate	Epoke
1.3	Model: 4902 or approved alternate	4902 Sirius Combi AST
1.4	6.5 Cubic yard capacity	YES
1.5	951 gallon liquid capacity	YES
1.6	Stainless steel agitator with replaceable spring fingers	YES
1.7	Soft rubber base	YES
1.8	Spring base and spring base adjustment	YES
1.9	Conveyor belt	YES
1.10	Transmission and variable pre-wetting pump, 5% to 30%	YES
1.11	External neutral gear	YES
1.12	Grate 4” X 4”	YES
1.13	Inspection ladder	YES
1.14	Guides, lateral with rails	YES
1.15	Hydraulic fittings	YES
1.16	Stainless steel delivery roller with 8 mm steel cams	YES
1.17	Multi-plug through cab kit with wiring and sealed quick couplers	YES
1.18	Distribution box with electronic speed adapter/pulse divider	YES
1.19	Auto stop of liquid refilling	YES
1.20	Shut off valve	YES
1.21	Delivery spout	YES
1.22	Epo-Master III controller with external card reader and RS 232	YES
1.23	Long spreader chute	YES
1.24	High speed anti-icing spray bar	YES
1.25	D ring tie down kit	YES
1.26	Lighting package consisting of two strobe lights and one rear work light	YES
1.27	Electric symmetry spreader control	YES
1.28	Level indicators for dry material and liquid	YES
1.29	Leg system	YES
1.30	Folding cover	YES
1.31	Spinner guard	Not Available on 4902
1.32	Mounting and installation on MDOT supplied truck	YES
	Combination Spreader with High Speed Anti Icing	
Make Offered:		**Epoke**
Model Offered:		**4902 Sirius Combi AST**

22. - Spec. No. C62-0051-16		
VACUUM SWEEPER WITH EXTENSION BOOM AND WANDERING HOSE FOR CATCH BASIN CLEANING, TRUCK MOUNTED, WITH AUXILIARY ENGINE		
1.0 GENERAL		
1.1	The intent of this specification is to provide a truck mounted vacuum sweeper. The vacuum sweeper and truck furnished shall be new, of the latest model in current production and include all standard features normally offered with these models. The street sweeper and truck furnished shall meet all FMVSS, OSHA, MIOSHA, ANSI, State, and Federal standards and on delivery, shall be fully assembled, mounted, and ready to be put in service.	YES
2.0 CHASSIS		2017 Autocar Xpert
2.1	Chassis shall be cab-over-engine design with 32,000 pound GVWR	YES
2.2	Wheel base shall be 152 inches	164
2.3	Cab to axle shall be 122 inches	138
2.4	Overall length of sweeper without wandering hose shall not exceed 257 inches	YES
2.5	Distance from the centerline of the rear axle to the rear of the sweeper without the wandering hose shall not exceed 47.3 inches	YES
2.6	Rear of sweeper shall have a rear panel to provide under ride protection	YES
2.7	When dumping debris, material shall not be discharged on top of rear panel	YES
2.8	One (1) 50 gallon fuel tank shall be shared by both engines and shall be easily accessible without raising or shifting any components	YES

2.9	A fuel gauge in cab shall be furnished	YES
2.10	Yield strength of frame shall be 110,000psi minimum	YES
2.11	Chassis engine shall be Cummins ISB with 205hp @ 2,300rpm and 520 foot/pounds torque @ 1,600rpm	YES
2.12	Chassis engine shall be equipped with a single right-hand vertical exhaust system	LH Vertical
2.13	Cooling system shall be protected to -30°F	YES
2.14	Engine shall be equipped with dual stage dry-type air cleaner, spin-on fuel filter, full flow oil filter, and fuel/water separator	YES
2.15	Engine shall be equipped with a block heater	YES
2.16	Radiator shall be viscous drive type	YES
2.17	Transmission shall be 2000 series Allison automatic with heavy duty oil cooler	YES
2.18	Rear axle shall be two speed with 5.86/8.17:1 ratios for proper sweeping and transport speeds	YES
2.19	Front axle shall be 12,000 pound GAWR with 12,000 pound springs, shock absorbers, and a front stabilizer bar	YES
2.20	Rear axle shall be 21,000 pound GAWR with 23,000 pound flat leaf suspension and single tapered leaf auxiliary springs	YES
2.21	All tires and rims shall be interchangeable	YES
2.22	Tires shall be 11R22.5 14ply G load rated; rears shall be dual	YES
2.23	Wheels shall be 10 bolt, hub piloted 22.5 x 8.25 Accuride	YES
2.24	Parking brake shall be spring applied rear wheel drum and shoe	YES
2.25	Brakes shall be full air brakes with a 15.2cfm capacity compressor, automatic slack adjusters, and air dryer.	YES
2.26	Cab shall have maximum visibility, forward line of sight from chassis front bumper to the point on the ground visible to the operator shall not exceed 8 feet for an SAE 98th percentile size operator	YES
2.27	Steering shall be full power with dual operator controls	YES
2.28	Each steering column shall be fully independent and shall include separate steering gear boxes, separate drag links, and separate pitman arms	YES
2.29	Seats shall be adjustable, cloth, and include 3 point seatbelts	
2.30	Sweeper shall include two (2) outside West Coast type mirrors with lower 8 inch convex lens Outside mirrors shall be mounted forward of the front wheels	YES
2.31	All switches shall be illuminated	YES
2.32	Switches shall be clearly identified by name and international symbol	YES
2.33	Cab shall have air conditioning, fresh air heater, ventilator, and defroster	YES
2.34	Cab shall have full flow through ventilation	YES
2.35	Windshield wipers shall be two-speed with washer and intermittent feature	YES
2.36	Interior of cab shall have acoustical insulation for low operating noise, automotive type trim, and center sweeper console	YES
2.37	Dash shall be faced with soft molded plastic	YES
2.38	All glass shall be tinted safety glass	YES
2.39	Each operator station shall have an adjustable sun visor	YES
2.40	Doors shall be key locked	YES
2.41	Door windows shall power up & down	YES
2.42	Side windows shall have defogger	YES
2.43	Chassis left side operator instrument panel shall be chassis OEM, full vision illuminated with tachometer, speedometer, odometer, trip odometer, fuel gauge, water temperature gauge, air pressure gauge, and volt gauge	YES
2.44	Chassis right side operator instrument panel shall be chassis OEM, full vision illuminated with tachometer, speedometer, odometer, trip odometer, fuel gauge, water temperature gauge, air pressure gauge, and volt gauge	YES
2.45	Chassis gauges shall include speedometer, odometer, coolant temperature, tachometer, voltmeter, oil pressure, fuel level, and air pressure	YES
2.46	Chassis engine instruments shall include warning light and chime for low coolant level and high coolant temperature	YES
2.47	Console shall have a left/right primary driver switch	YES
2.48	Truck instruments shall include warning lights for battery and cab latch to make sure cab is locked in position	YES
2.49	Sweeper engine instruments shall include tachometer, hour meter, oil pressure, fuel, voltage, and coolant temperature	YES
2.50	Sweeper instruments shall include an auxiliary engine air filter restriction indicator mounted in the central rotating console and a hopper “full load” indicator to notify operator that maximum GVW is being approached	YES

2.51	Dash and all console switches including transmission controls and all gauges shall be illuminate	YES
2.52	Batteries shall be located in an enclosed accessible environment	YES
2.53	Chassis shall have two (2) maintenance free batteries rated at not less than 1400 total CCA, 12 volt Chassis engine shall have a 100 amp alternator	YES
2.54	Chassis lighting shall include sealed multi-beam halogen head-lights, stop lights, backup lights, license plate lights, clearance lights, signal lights, illuminated gauges and instrument panel, and directional lights with hazard switch	YES
2.55	Vogel automatic lubrication system to provide appropriately timed grease application to all greaseable points shall be provided for the sweeper and chassis	YES
2.56	The standard 8 inch diameter convex mirrors shall be replaced with 12 inch diameter convex mirrors	YES
2.57	Two (2) 7 inch x 16 inch stainless steel mirrors that are heated and controlled using two (2) dash mounted switches shall be provided and are in lieu of standard mirrors	YES
2.58	Radio shall be AM/FM	YES
2.59	Truck seats shall be high back cloth air suspension type without armrests	YES
3.0 SWEEPER ENGINE		
3.1	Diesel engine shall be 4 cylinder, turbo charged, dynamically counter balanced 276 cubic inch displacement John Deere 4045TF275 or equal	YES
3.2	Horse power rating shall be 115hp @ 2,500rpm, torque shall be 291 pound/feet @ 1,400rpm	John Deere 74HP Tier 4 Final
3.3	Engine shall be wet sleeve cylinder	YES
3.4	Air filter shall be dual safety element dry type with restriction indicator	YES
3.5	Engine cooling system shall be protected to -30°F	YES
3.6	Sweeper engine shall drive the blower fan by a heavy-duty five (5) "V" groove power belt, without the use of a step-up auxiliary gearbox	YES
3.7	Entire joined engine, coupling, and fan assembly shall be isolation mounted on the auxiliary frame	YES
3.8	Engine shall be enclosed and surrounded by he front part of the sweeper body by two (2) fiberglass access doors	YES
3.9	One (1) access doors shall be on the right-hand side and one (1) on the left-hand side of the sweeper body	YES
3.10	These doors shall provide access to serviceable items without tilting the hopper	YES
3.11	A fluid coupler shall be installed between the auxiliary engine and the power belt drive which allows for smooth starting and stopping of the engine while preventing the momentum of the fan system from driving the engine when the engine is turned off	YES
3.12	An air pre-cleaner shall be provided to protect sweeper engine	YES
4.0 BLOWER		
4.1	Blower shall be rated at not less than 20,000CFM	YES
4.2	Blower shall be driven by a five (5) "V" groove power belt with tension adjustment not requiring repositioning of the engine	YES
4.3	Blower shall be a turbine type with 9 vanes, 31-3/8 inches in diameter, constructed of abrasion resistant steel and fully balanced for longevity of fan and bearing life	YES
4.4	Die-cast aluminum alloy or steel open face blower will not be acceptable	YES
4.5	Blower housing shall be constructed of 10 gauge abrasion resistant steel and lined with Linatex (or equal) for maximum extended wear in abrasive environments	YES
4.6	Blower housing shall have an inspection door for quick inspections without removing the blower	YES
4.7	Access to inspection door shall be possible without tilting hopper	YES
4.8	Blower housing shall NOT be an integral part of the hopper	YES
4.9	Replacement of the blower housing must NOT require any cutting or welding of the housing and or hopper	YES
4.10	Blower shall be mounted on heavy-duty regreasable bearings capable of being greased from ground level	YES
4.11	Greasing of bearings must be possible without tilting hopper	YES
5.0 SUCTION NOZZLES AND HOSES		

5.1	Suction nozzle pick-up area shall NOT be less than 174 square inches with suction nozzle width a minimum of 30 inches	YES
5.2	Suction hose shall have a quick disconnect coupling not requiring any tools at the lower area near the suction nozzle	YES
5.3	Quick disconnect must be accessible without tilting the hopper	YES
5.4	Entire suction hose quick disconnect section and hose transition piece	YES
5.5	All metal components, nozzle, tube, etc. shall be constructed of abrasion resistant steel	YES
5.6	Cast aluminum components or components using rubber liners shall NOT be acceptable	YES
5.7	Suction hose shall 11 inches inside diameter minimum	YES
5.8	Nozzles shall extend 15 inches beyond the wheel track	YES
5.9	Nozzles shall have a replaceable wear edge for running against the curb	YES
5.10	An integral automatic "jackknife style" gate valve shall be bolted on the top of the suction hose where the material enters the hopper	YES
5.11	Gate valve shall be automatically activated with the suction nozzle activation and prevent material from dropping back down the nozzle tubes when vacuum is stopped	YES
5.12	Gate valve shall also prevent material/debris from dropping into the suction nozzle when the sweeper is traveling	YES
5.13	Jackknife style gate valve is of such design that it cleans itself from debris and is operated by a heavy-duty air cylinder that activates the gate valve	YES
5.14	Air cylinder shall be similar to other air cylinders used in the air system of the sweeper	YES
5.15	Suction nozzle shall ride on two (2) heavy-duty caster wheels	YES
5.16	Caster wheels shall be of a pivoting design	YES
5.17	Suction nozzle shall be equipped with a front mounted shutter	YES
5.18	Shutter shall be replaceable as a separate part, rather than replacing the entire suction nozzle	YES
5.19	Both suction nozzles shall include an electronically/pneumatic controlled door	YES
5.20	A third caster wheel on both suction nozzles shall be provided in addition to the two standard caster wheels mounted on the right suction nozzle to establish a level nozzle ride in crowned curb lines	YES
5.21	Sweep path shall be:	YES
	a. Nozzle only – 35 inches	YES
	b. Side broom and nozzle	YES
	c. Extension broom and nozzle – 78 inches	YES
	d. Side broom, extension broom, and nozzles -94 inches	YES
	e. Dual side brooms, extension broom, and dual nozzle – 144 inches	YES
6.0 SIDE BROOMS		
6.1	Right and left side brooms shall be a free floating trailing arm design with inward motion safety to prevent damage when sweeping and encountering a fixed obstacle	YES
6.2	Trailing arm shall be of a parallelogram design for simple non-binding action/motion and for constant bristle wear pattern	YES
6.3	Side brooms shall be 36 inch diameter minimum with hydraulically driven rotation	YES
6.4	Side brooms shall be pneumatically raised, lowered, and suspended by heavy-duty pneumatic cylinders	YES
6.5	Adjustable down pressure shall be pneumatically controlled by operator from the cab	YES
6.6	Broom hydraulic motor drive shall provide not less than 4,500 inch pounds of torque	YES
6.7	Side brooms shall have greaseless pivot pins	YES
6.8	Side broom assemblies shall be supported in the storage position by a transport hook	YES
6.9	Each side broom shall be controlled from the cab by a rocker switch	YES
6.10	To prevent exposure to accidental laceration by the bristle tips, side brooms shall retract with wire bristle tips unexposed	YES
6.11	A variable speed control shall be provided for both the left-hand and right-hand side brooms which will allow independent control of the brooms speed from engine RPM or travel speed	YES
6.12	Tilting of the both side brooms shall be variable from the cab	YES

6.13	An electronically controlled linear actuator shall allow the operator to tilt the side brooms inward and outward from the cab while sweeping	YES
7.0 EXTENSION BROOM		
7.1	Extension broom shall be 54 inches long, 16 inches in diameter, disposable, and reversible	YES
7.2	Extension broom shall be hydraulically driven (with relief valve), pneumatically raised, lowered, and suspended	YES
7.3	Extension broom shall operate at an 18° windrow angle minimum	YES
7.4	Broom shall pivot for left or right hand side sweeping and is activated by a heavy-duty pneumatic cylinder	YES
7.5	Extension broom hydraulic motor drive shall provide 4,500 inch pounds of torque	YES
7.6	Suspension shall be by pneumatic lift with out-of-cab variable down pressure control	YES
7.7	Extension broom shall have a greaseless pivot pin	YES
7.8	Extension broom rotation shall stop and all sweeping functions shall raise automatically when transmission is placed into reverse or when the sweeper is put in transport mode	YES
7.9	A broom cover shall be provided	YES
8.0 HOPPER		
8.1	Hopper volumetric capacity shall be 8 cubic yards minimum	YES
8.2	Hopper shall be constructed of 10 gauge steel sides and ¼ inch floor	YES
8.3	A weight actuated full load indicator shall be mounted in the cab on the control panel	YES
8.4	The hopper tilt angle when dumping shall be a minimum of 50°	YES
8.5	Dumping shall be accomplished by titling the hopper via a two-stage telescopic cylinder	YES
8.6	Hopper floor angle shall be a minimum of 10°	YES
8.7	A removable, replaceable, and adjustable abrasion resistant “scoop” style steel deflector shall be located at each suction inlet	YES
8.8	Deflector shall direct material to the center of the hopper for optimal loading conditions	YES
8.9	Hopper rear door shall be hinged at the top of the door and opened by means of a hydraulic cylinder	YES
8.10	Hopper rear door shall open at a minimum angle of 90° to be perpendicular to the hopper opening for a maximum dumping action	YES
8.11	Hydraulic cylinder movement shall be controlled by the use of two (2) hydraulic valve levers on the right-hand side of hopper to view discharging debris out of the hopper during dumping for dumping for maximum safety	YES
8.12	Rear door shall have an internal door prop for operator safety	YES
8.13	Hopper rear door shall include an automatic lock mechanism for a tight fit and optimal sealing between hopper and the rear door	YES
8.14	Rear door seal shall be a water resistant heavy-duty reinforced D style rubber seal, foam seals are not acceptable	YES
8.15	Two (2) 34-½ inch x 43-½ inch screens providing a total of 3,000 square inches shall be constructed of 11 gauge steel and installed to allow air to move freely from the hopper into the blower area	YES
8.16	Hopper screens shall be hinged and pinned to allow easy clean-out	YES
8.17	Front section of the hopper shall be constructed of heavy fiberglass and cover the auxiliary engine	YES
8.18	Fiberglass shall consist of a roof section and two (2) fiberglass side doors that allow access to serviceable items	YES
8.19	Hopper shall cover the main water tank of the water system and will provide easy access to the water system components	YES
8.20	When raising the hopper the water tank shall not raise with the hopper	YES
8.21	Water tank shall be mounted to the sweeper frame and shall be removable for service	YES
8.22	Hopper shall have hopper cutouts at each side of hopper to provide easy access to the quick disconnect section on the suction nozzle and allow suction hose and nozzle to have side-way movement for establishing more suction power at the curb	YES
8.23	Inside of hopper shall be coated with abrasion resistant LifeLast polyurethane coating	YES

8.24	An 8 inch ID 12 foot long hydraulic wandering hose located at the rear of the machine and capable of deep cleaning catch basins shall be provided	YES
8.25	This system shall be approved for the addition of three (3) 4 foot steel wandering hose extensions or four (4) aluminum wandering hose extensions	YES
8.26	Wandering hose shall have an 8 inch diameter x 5 foot long catch basin nozzle with water injection system for dust control	YES
8.27	Wandering hose shall be equipped with dual push button fingertip controls on the nozzle handles to hydraulically raise and lower the nozzle	YES
8.28	Wandering hose shall be equipped with a rear auxiliary engine throttle control	YES
8.29	Hose shall be constructed of heavy-duty rubber	YES
8.30	Hydraulic inlet changeover plates shall automatically convert from sweeper to catch basin operation	YES
8.31	Hopper shall include a 6 inch drain located on the lower portion of the rear door	YES
8.32	An inspection door shall be provided and built into the right side of the hopper	YES
8.33	An additional step, mounted on the bumper, and an easy to reach handle, mounted on the right side of the hopper shall be provided that both provide easy access to the inspection door and viewing of the load in the hopper	YES
8.34	In-cab hopper dump controls shall be in addition to the standard outside controls	YES
8.35	Two (2) 4 foot aluminum nozzle extensions mounted at the rear of the sweeper for the wandering hose shall be provided	YES
8.36	A 31 inch work platform shall be located between cab and sweeper body	17"
9.0 SPRAY WATER SYSTEM		
9.1	Water system shall consist of two (2) water tanks	YES
9.2	Water tanks shall be removable and have a total capacity of 335 gallons constructed of rust proof polyethylene	YES
9.3	Water tanks shall be frame mounted with NO part sharing any common wall with the hopper and shall not raise during hopper dumping	YES
9.4	Two (2) electric 12 volt, 2 speed, diaphragm type water pumps shall provide 4gpm and 40psi to the suction nozzle, the side broom, and the extension broom	YES
9.5	One pump shall be fully dedicated to supplying water to the RH suction nozzle, RH side broom, and extension broom	YES
9.6	One pump shall be fully dedicated to supplying water to the LH suction nozzle, LH side broom, and optional front spray bar	YES
9.7	Water pumps shall be selectively controlled from the cab to adjust to the sweeping conditions	YES
9.8	A 16 foot 8 inch fill hose with NST coupling and anti-siphon connector with strainer shall be supplied	YES
9.9	A water level gauge shall be provided on the control console within the cab	YES
9.10	Two (2) water spray nozzles are located at each side broom	YES
9.11	Seven (7) removable water spray nozzles shall be located inside the suction nozzle	YES
9.12	A water filter located near the water pumps must be easy to access and clean without tilting the hopper	YES
9.13	A ball valve shall be provided to allow cleaning of the filter without the loss of water from the water tanks	YES
9.14	All water piping shall be external to the operator cab	YES
9.15	Extension broom shall be supplied with four (4) rubber mounted quick disconnect spray nozzles	YES
9.16	All water lines shall be color-coded green for easy identification	YES
9.17	Pressure water lines shall be Nylon PFT line	YES
9.18	All suction and fill water hose shall be a synthetic rubber braid reinforced hose	YES
9.19	All water connections shall be either Prestomatic push to lock or Push Lok fittings	YES
9.20	A 2-½ inch anti-siphon air gap shall be supplied on the water tank fill to prevent contamination of water supply	YES
9.21	A hopper deluge system consisting of a special V-shaped nozzle assembly in the hopper rear door for easy washing out of the hopper shall be supplied	YES
9.22	Standard equipped water fill hose can be connected to a hydrant and the wash out nozzle in the hopper rear door to allow pressurized water to clean the hopper interior	YES
9.23	A high pressure pump with 24 inch hand lance and 30 foot hose shall be supplied to provide 4.2gpm at 1,500psi	YES
9.24	Hose shall have an attached spray wand with on/off trigger and two (2) nozzle settings allowing the operator to spray fine or wide	YES

9.25	Quick disconnect for the high pressure wash down shall be easily accessible on the right side of the sweeper	YES
9.26	A front mount spray bar shall be provided for increased water supply during extreme sweeping conditions	YES
10.0 HYDRAULIC SYSTEM		
10.1	Tandem hydraulic pumps shall be a direct gear pump for maintenance free operation with a flow capacity of 7.7gpm @ 2,500rpm each	YES
10.2	Reservoir capacity shall be 23 gallon minimum with an exterior sight gauge	YES
10.3	Reservoir shall be located in an enclosed auxiliary engine compartment for quick inspections without tilting hopper	YES
10.4	All hydraulic circuits shall have quick disconnect pressure check ports for ease of maintenance	YES
10.5	All high pressure fittings shall be “O” ring face seals (OFS) on hose ends or “O” ring boss on hydraulic ports	YES
10.6	A spin-on 10 micron hydraulic filter shall be provided	YES
10.7	Changing of the hydraulic filter shall be possible without tilting hopper	YES
10.8	An electric over hydraulic auxiliary pump shall be provided to allow raising and lowering the hopper as well as opening and closing the hopper rear door without running auxiliary engine	YES
11.0 PNEUMATIC SYSTEM		
11.1	Pneumatic system shall have DOT, Prestomatic push to lock fittings	YES
11.2	There shall be a PR4 type pressure protector for the chassis air system to protect the chassis air system at air pressures below 85psi	YES
11.3	A separate air tank for all sweeper air components shall be provided	YES
11.4	All pneumatic cylinders must be rated to 250psi and have separate rod seal and wiper to prevent contamination	YES
11.5	Each cylinder shall be controlled by a single, two (2) position, solenoid valve mounted on a manifold with common input and exhaust	YES
11.6	A manual override shall be provided on each solenoid valve for trouble shooting and function lockout	YES
11.7	A filter with polycarbonate bowl to filter out contaminants down to 5 microns to prevent contamination in the air system shall be provided	YES
11.8	All air lines shall be color coded silver and function stamped	YES
12.0 ELECTRICAL SYSTEM		
12.1	Sweeper electrical system shall be independent from the electrical system of the chassis	YES
12.2	Sweeper engine shall have one (1) 925CCA, 12volt battery	YES
12.3	Sweeper engine shall have a 105amp alternator	YES
12.4	Sweeper shall have an electronic back-up alarm for additional warning when chassis is in reverse	YES
12.5	Sweeper lighting shall include rear identification lights, side broom and rear clearance lights	YES
12.6	Sweeper warning lights shall include hopper up, hopper full, and hopper rear door open	YES
12.7	Sweeper wiring harnesses shall be full color-coded and hot stamped with appropriate word designation labeled every four inches on each wire	YES
12.8	Manual reset circuit breakers or fuses shall protect all electrical circuits	YES
12.9	A multi-light 4 foot arrow shaped indicator shall be mounted on rear of sweeper	YES
12.10	Arrow lights shall be controlled bi in-cab switch to indicate left, right, or both directions of travel	YES
12.11	Two (2) strobe lights shall be provided with harness, mountings, and light guards, one (1) mounted on cab and one (1) mounted on the rear of the hopper	YES
12.12	Rear brake, turn, clearance, and tail lamps shall be LED type	YES
12.13	Two (2) rear facing lights shall be provided to illuminate the rear of sweeper during night operations	YES
13.0 CONTROLS		
13.1	All sweeper controls shall be mounted on a central terminal for use from either the right or left positions	YES
13.2	Controls shall include all sweep, spray water, and lighting functions and be conventional rocker switches	YES
13.3	Controls for auxiliary engine ignition and throttle, side broom down pressure, and manual reset circuit breakers shall be located on the control console	YES

13.4	The control console shall have a quick release access cover that can be fully hinged over a pivoting hinge	YES
14.0 INSTRUMENTS		
14.1	Sweeper engine instruments shall include:	YES
	a. Tachometer	YES
	b. Hour meter	YES
	c. Oil pressure	YES
	d. Fuel level	YES
	e. Voltage	YES
	f. Coolant temperature	YES
	g. Engine air filter restriction indicator	YES
	h. Rear door open indicator	YES
	i. Raised hopper indicator	YES
	j. Full hopper indicator	YES
	k. Auxiliary engine diagnostic gauge	YES
15.0 PAINT		
15.1	All visible exterior metallic surfaces shall be coated prior to assembly with polyester powder coat	YES
15.2	Complete sweeper shall be painted orange matching DuPont IMRON #43106-X or equal	YES
VACUUM SWEEPER WITH EXTENSION BOOM AND WANDERING HOSE FOR CATCH BASIN CLEANING, TRUCK MOUNTED, WITH AUXILIARY ENGINE		
Make Offered:		**Elgin**
Model Offered:		**Whirwlind**

epoke®

BULK SPREADERS

epoke is innovation!

THE EPOKE PRINCIPLE
Patented 1956

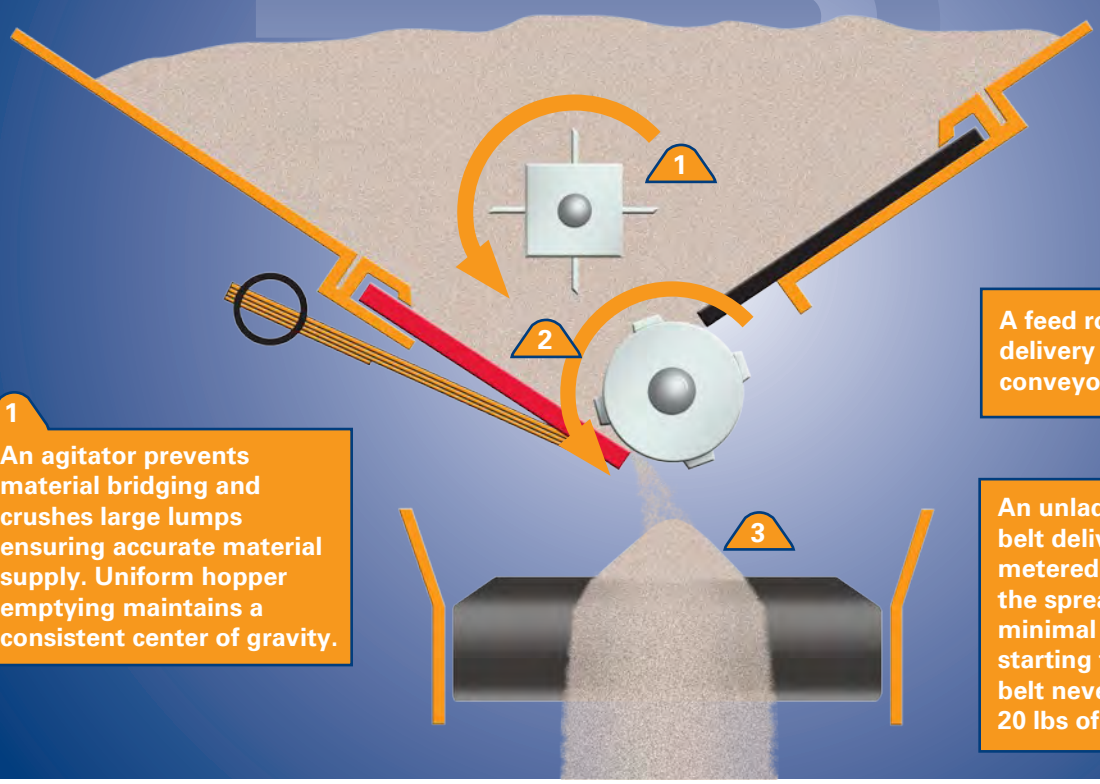

1
An agitator prevents material bridging and crushes large lumps ensuring accurate material supply. Uniform hopper emptying maintains a consistent center of gravity.

2
A feed roller ensures accurate delivery of material to the conveyor belt.

3
An unladen rubber conveyor belt delivers the precisely metered quantity of material to the spreader disk. This ensures minimal wear and low spreader starting torque. The conveyor belt never carries more than 20 lbs of material.

SYMMETRY FUNCTION

Precise material placement reduces waste - Save time, money and the environment.

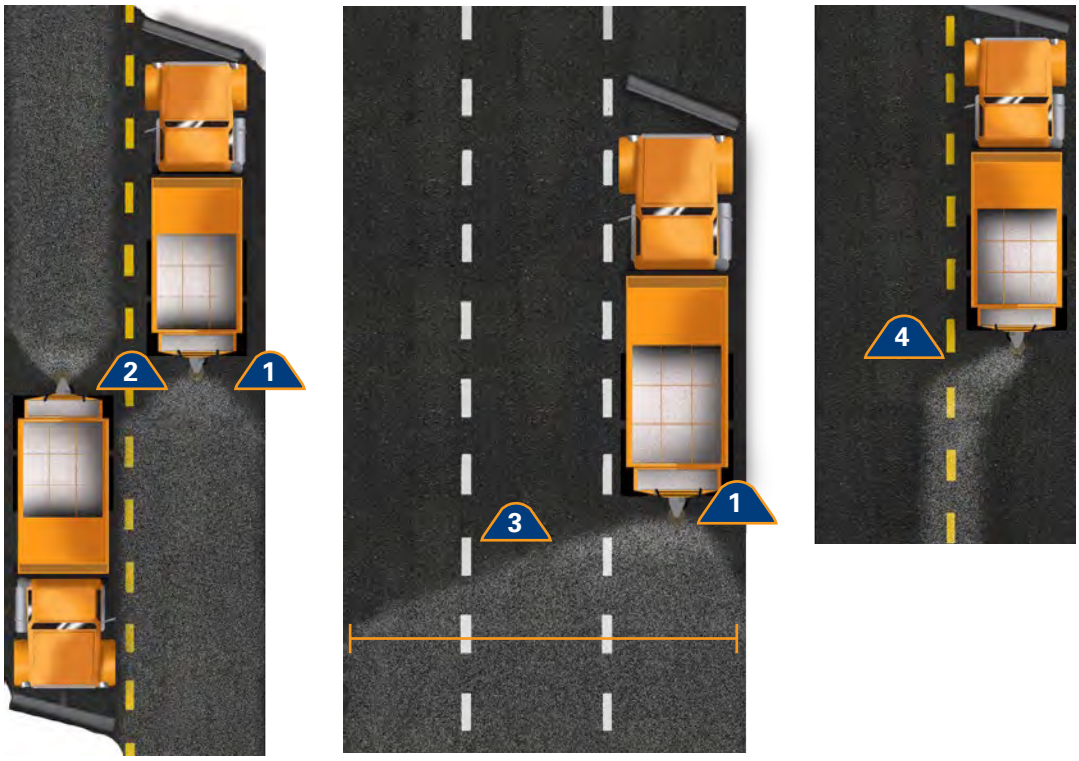

The Epoke Symmetry Function:

1. Precise material placement
2. Accurate lane material placement
3. Multi-lane spreading
4. Centre line stripping

THE EPOKE ADVANTAGE

VARIABLE PREWETTING 5% TO 30%

AT 30% PREWETTING 30% OF THE TOTAL RATE (BY WEIGHT) IS LIQUID SO:

- 100 lbs. total rate =
  70 lbs. of dry + 30 lbs. of liquid

BENEFITS OF 30% PREWETTING

REDUCED DRY MATERIAL USAGE:

- 30% of application rate automatically replaced with brine
- Reduced bounce and scatter
- Less effect of traffic blowing salt off the pavement
- Faster reaction time
- Salt works better to lower temperatures

WE INNOVATE IT, WE BUILD IT, WE BACK IT.

1·2·5·10 WARRANTY

1 YEAR	Full Machine
2 YEARS	Electrical Components
5 YEARS	Stainless Steel Delivery Roller and Agitator Shaft
10 YEARS	Hopper Rust Perforation
15 YEARS	Parts Availability Guarantee

Epoke products are engineered, built, painted, assembled and tested in ONE trusted ISO Certified facility that has met stringent quality standards for over 50 years.

PAINT MATTERS

When dealing with corrosive materials and extreme climates - paint matters. All material surfaces are steel shot blasted and have a zinc-dust combined primer coat and one finish coat of polyurethane lead free paint- baked and cured for durability. Epoke's industry leading paint process is backed by a 10 year warranty.

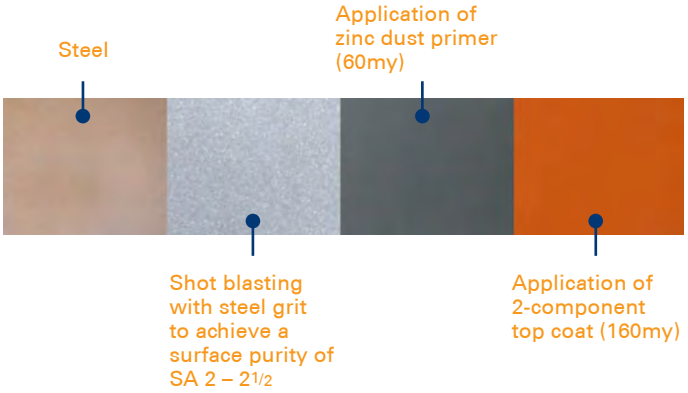

SOLUTIONS FOR
SMALLER TRUCKS

Igloo spreaders are available in engine or hydraulic drive versions and in 3 lengths of hoppers (with various capacities) to fit smaller trucks. Perfect for highway supervisors or commercial property contractors and municipal users servicing tight areas requiring accurately spread materials.

SOLUTIONS FOR
ACCURATE PREWETTING

The 3800 AST is perfect for precise material application on streets, highways and parking areas for dry, prewet and single lane anti-icing.

IGLOO 2300/2400

DRY CAPACITY	
0.8 - 2.0 m^3	1.0 - 2.6 cu yd
LIQUID CAPACITY	
340 - 568 litres	90 - 150 gallons
PRE-WETTING	
yes - fixed at 30%	
ANTI-ICING	
yes - up to one lane	
GROUND SPEED RELATED	
yes	
EPOKE PRINCIPLE	
no - ribbed conveyor belt	
SPREAD WIDTH - DRY OR PREWET MATERIALS	
Up to 6 meters	Up to 20 feet

3800 AST

DRY CAPACITY	
3.0 - 9.0 m^3	4.0 - 12.0 cu yd
LIQUID CAPACITY	
1,850 - 4,080 liters	490 - 1,075 gallons
PRE-WETTING	
yes - variable from 5% to 30%	
ANTI-ICING	
yes - effective up to one lane	
GROUND SPEED RELATED	
yes	
EPOKE PRINCIPLE	
yes	
SPREAD WIDTH - DRY OR PREWET MATERIALS	
Up to 12 meters	Up to 40 feet

SOLUTIONS FOR
MULTIPLE ROLES

The 4900 combination spreader serves three roles on just one chassis. It's a highly capable, large volume anti-icing spreader AND a high capacity dry and prewet material spreader.

SOLUTIONS FOR
HIGH SPEED RESULTS

The 4902 combination spreader is similar to the 4900, but has the ability to do high speed (up to 55 mph/ 90km/h!) anti-icing application. The 4902 offers unparalleled versatility for anti-icing from parking lots to side streets with the added capability of high speed coverage on multilane highways or airport runways.

4900 AST COMBI

DRY CAPACITY	
4.0 - 9.0 m^3	5.2 - 12.0 cu yd
LIQUID CAPACITY	
1,850 - 11,100 liters	490 - 2,930 gallons
PRE-WETTING	
yes - variable from 5% to 30%	
ANTI-ICING	
yes - up to two lanes at normal spreading speeds	
GROUND SPEED RELATED	
yes	
EPOKE PRINCIPLE	
yes	
SPREAD WIDTH - DRY OR PREWET MATERIALS	
Up to 12 meters	Up to 40 feet

4902 AST COMBI-HIGH SPEED

DRY CAPACITY	
4.0 - 9.0 m^3	5.2 - 12.0 cu yd
LIQUID CAPACITY	
1,850 - 11,100 liters	490 - 2,930 gallons
PRE-WETTING	
yes - variable from 5% to 30%	
ANTI-ICING	
yes - up to 3 lanes at up to 90 km/h (55 mph)	
GROUND SPEED RELATED	
yes	
EPOKE PRINCIPLE	
yes	
SPREAD WIDTH - DRY OR PREWET MATERIALS	
Up to 12 meters	Up to 40 feet

SOLUTIONS FOR
LIQUID SPREADING

The Virtus is a high speed (up to 55 mph/ 90km/h!), high volume, straight liquid sprayer with factory supplied integral frame and liquid tanks in various capacities for extended anti-icing duties. It is also available as a 'kit' for installation on your tanker truck or trailer.

SOLUTIONS FOR
AIRPORT USE

All Epoke models can be used on runways, taxi ways, aprons or the ground side of airports and the 3800-2T twin spinner offers wide application spreading of dry and prewet materials for airport runways and taxiways.

VIRTUS - LIQUID ONLY

DRY CAPACITY	
n/a	
LIQUID CAPACITY	
7,500 - 12,500 liters	2,000 - 3,300 gallons
Kit - capacity determined by customer supplied tanker truck or trailer	
PRE-WETTING	
n/a	
ANTI-ICING	
yes - up to 3 lanes at up to 90 km/h (55 mph)	
GROUND SPEED RELATED	
yes	
EPOKE PRINCIPLE	
no	
SPREAD WIDTH - DRY OR PREWET MATERIALS	
n/a	

3800 AST - 2T

DRY CAPACITY	
4.0 - 9.0 m^3	5.2 - 12.0 cu yd
LIQUID CAPACITY	
1,850 - 4,080 liters	490 - 1,075 gallons
PRE-WETTING	
yes - variable from 5% to 30%	
ANTI-ICING	
no	
GROUND SPEED RELATED	
yes	
EPOKE PRINCIPLE	
yes	
SPREAD WIDTH - DRY OR PREWET MATERIALS	
Up to 24 meters	Up to 80 feet

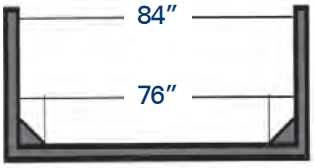

DUMP BOX REQUIREMENT FOR SIRIUS

Spreaders shown are typical but other hopper and tank configurations to fit specific chassis requirements are available- please contact your local Epoke Dealer for more information.

SIRIUS AST

SH - SMALL - 3/4/5 m³ (4.0/5.2/6.5 yd³)

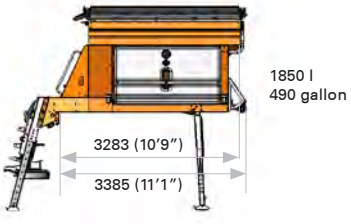

SH - MEDIUM - 4/5/6/7 m³ (5.2/6.5/7.8/9.1 yd³)

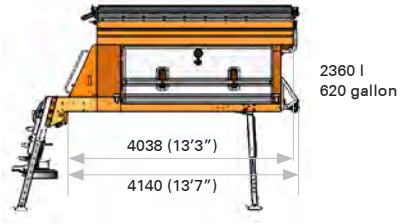

SH - LARGE - 6/7/8/9 m³ (7.8/9.1/10.4/11.7 yd³)

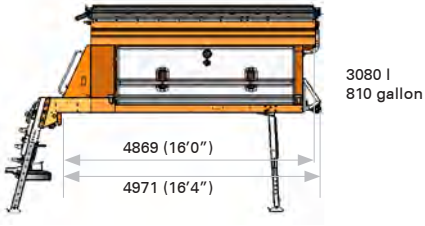

SIRIUS COMBI AST

SH - SMALL - 4/5 m³ (5.2/6.5 yd³)

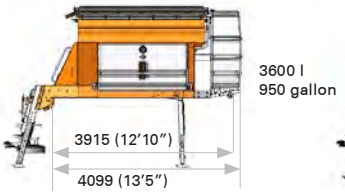

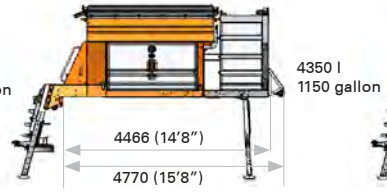

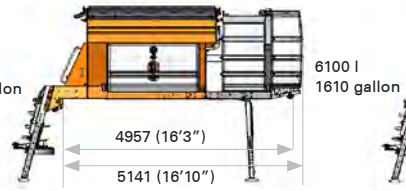

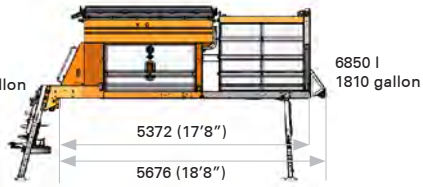

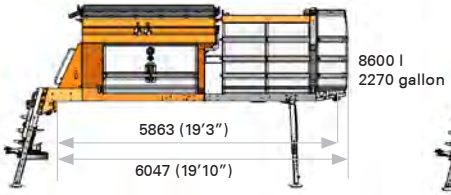

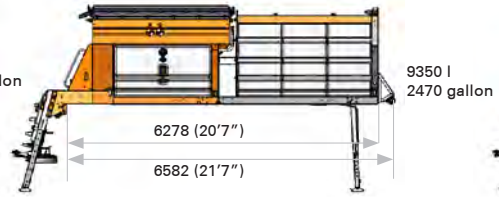

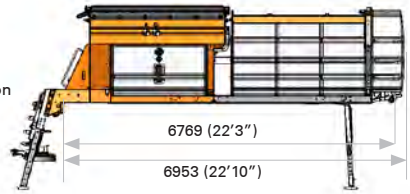

SH - MEDIUM - 6/7 m³ (7.8/9.1 yd³)

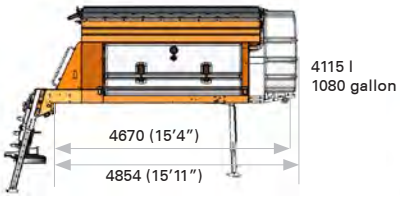

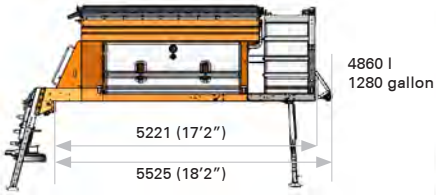

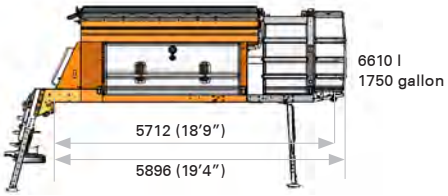

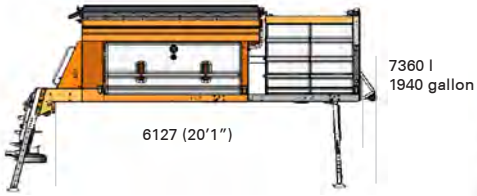

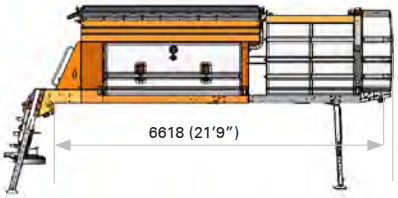

EPOMASTER

EpoMaster is Epoke's patented In Cab Controller. EpoMaster allows operators to precisely control metered spreading width, rate, and symmetry.

FEATURES

- Data output for easy information tracking.
- Ergonomic controls.
- Ease of operation for all spreader functions.
- Available with standard or metric settings.

BENEFITS

- Ease of use.
- Precise control.
- Reliable and durable.
- Available EpoSat® GPS automated spreading.

EPOSAT

PURPOSE

- EpoSat® is completely automated, hands-free spreading based on GPS positioning.
- Predetermined route optimization - consistent spreading... with every operator, every time!

SAFETY

- Increased operator focus on driving conditions.
- Planned, repeatable and consistent material spreading - every time for safer roads!

BENEFITS

- Reduced material consumption.
- Lower operating costs.
- Route optimization.
- Route navigation.
- Increased traffic safety.
- Improved work environment for the drivers.

INSTALLATION OPTIONS

FRAME MOUNT

HOOK LIFT

LEG SYSTEM

GO FROM DUMP TRUCK TO SPREADER AND BACK WITHIN MINUTES!

- Gain flexibility without the compromise of a multi-use body.
- Greater legal payload, more durable, no loading restrictions, and less maintenance.

BENEFITS

- Lower basic truck weight.
- A standard commercial dump body is lighter, more durable and less prone to damage. It will carry more legal pay load than any comparable multipurpose body.
- Epoke spreaders can be loaded and unloaded fully laden with dry and liquid material.
- The versatility of the Sirius AST spreader design enables our units to fit onto virtually any truck.

THE EPOKE ADVANTAGE

epoke is innovation

From the original spinner disc through ongoing advancements in runway and road maintenance, Epoke is innovation!

environment

Epoke's advanced control system ensures accurate rates and precise placement of material- reducing environmental impact!

ease of use

EpoMaster controller ensures operator ease of use OR step up to the EpoSat option for full automated spreading!

endurance

We build it. We Back it! Manufactured to ISO standards with quality components. Epoke spreaders are built to last and backed with an industry best warranty!

economy

From reductions in material, escalating chemical costs, long life components, and reduced chassis maintenance, save money on your spreader life cycle cost!

Epoke dealers are chosen because of their expertise and commitment to providing superior customer service and solutions. Our dealer program provides comprehensive and ongoing training as well as integrated customer support. Service you can rely on, equipment you can depend on - a team you can trust!

Epoke North America Inc.

2458 Huntley Road, Stittsville (Ottawa),
Ontario, Canada, K2S 1B8

Tel. 613 838-2300
Toll Free 888 334-2464
Fax 613 838-2336

www.epokena.com

Built for clean. Backed for life.

Elgin Sweeper Company has been cleaning roadways since 1914, picking up and disposing harmful debris before it contaminates surface runoff and accumulates into roadside pollution. Today, Elgin is the leading manufacturer of sweepers for municipal, contractor, airport, highway and industrial sweeping. We offer the broadest selection of sweepers including all variations of sweeping technology – mechanical, vacuum, regenerative air and now mechanical with vacuum assist for waterless dust suppression. New technologies such as PM-10 compliance, alternative fuel driven, and noise reduction are just a few being offered. In addition, specialty products such as the GRS (Glycol Recovery System) and the Megawind Multi-purpose vacuum truck carry the Elgin brand name.

Elgin sweepers are used around the world and backed by the industry's most respected dealers, who provide quality sales, service, warranty and parts support. For more detailed information and specifications, contact the authorized Elgin dealer nearest you or visit us at www.elginsweeper.com

Your local Elgin dealer is:

1300 West Bartlett Road
Elgin, Illinois 60120-7529
Phone: 847-741-5370
Fax: 847-742-3035
E-mail: sales@elginsweeper.com • www.elginsweeper.com

©2014 Elgin Sweeper Company • Specifications subject to change without notice. • Effective 10/14 • P/N 0705208-E

Pelican®

Three Wheel Mechanical Street Sweeper

ENGINE
John Deere 4045T
74 hp @ 2400 rpm
SWEEP SYSTEM
Hydraulically driven brooms
No-Jam conveyor belt
SWEEPING PATH MAX
10 ft
3,048 mm
HOPPER CAPACITY VOLUMETRIC
3.6 y^3
2.8 m^3
WATER CAPACITY
220 gal
832 L
DUMPING HEIGHT MAX
9 ft 6 in
2,895 mm
DUMP LOCATION
Front
CHASSIS
Elgin produced
TRAVEL SPEED
20 mph
32 km/h

Waterless Pelican®

Three Wheel Mechanical Street Sweeper
Waterless Dust Control

ENGINE
John Deere 4045T
99 hp @ 2500 rpm
SWEEP SYSTEM
Hydraulically driven brooms
No-Jam conveyor belt
SWEEPING PATH MAX
10 ft
3,048 mm
HOPPER CAPACITY VOLUMETRIC
3.6 y^3
2.8 m^3
WATER CAPACITY (for hopper dust control)
35 gal
132 L
DUMPING HEIGHT MAX
9 ft 6 in
2,895 mm
DUMP LOCATION
Front
CHASSIS
Elgin produced
TRAVEL SPEED
20 mph
32 km/h
UNIQUE FEATURE
Waterless dust control

Broom Badger®

Dual Engine Squeegee Conveyor

ENGINE
Kubota 59 HP Diesel
SWEEP SYSTEM
Hydraulically driven broom
Squeegee with replaceable rubber edging
SWEEPING PATH MAX
9 ft 6 in
2,896 mm
HOPPER CAPACITY VOLUMETRIC
4 y^3
3 m^3
WATER CAPACITY
220 gal
833 L
DUMPING HEIGHT MAX
10 ft
3,048 mm
DUMP LOCATION
Left side variable high dump
CHASSIS
Isuzu NRR 19,500 lb Class 5 Cabover Chassis
TRAVEL SPEED
Highway speeds
UNIQUE FEATURES
No CDL required

Waterless Eagle®

Mechanical Street Sweeper
Waterless Dust Control

ENGINE
John Deere 4045T
74 hp @ 2400 rpm
SWEEP SYSTEM
Hydraulically driven broom
No-Jam conveyor belt
SWEEPING PATH MAX
10 ft
3,048 mm
HOPPER CAPACITY VOLUMETRIC
4.5 y^3
3.5 m^3
WATER CAPACITY
320 gal
1,210 L
DUMPING HEIGHT MAX
10 ft
3,048 mm
DUMP LOCATION
Right side
CHASSIS
Cab-Over or Conventional
TRAVEL SPEED
Highway speeds
UNIQUE FEATURE
Waterless dust control

Eagle®

Mechanical Street Sweeper
Dual Engine Belt Conveyor

ENGINE
QSF 2.8L
74 hp @ 2500 rpm
SWEEP SYSTEM
Hydraulically driven broom
No-Jam Conveyor belt
SWEEPING PATH MAX
10 ft - extendable to 12 ft
3,048 mm
HOPPER CAPACITY VOLUMETRIC
4.5 y^3
3.4 m^3
WATER CAPACITY
360 gal
1,363 L
DUMPING HEIGHT MAX
10 ft
3,048 mm
DUMP LOCATION
Right side
CHASSIS
Cab-Over or Conventional
TRAVEL SPEED
Highway speeds
UNIQUE FEATURES
Conveyor flexibility

Broom Bear®

Mechanical Street Sweeper
Single Engine Squeegee Conveyor

ENGINE
Cummins 8.9L ISL
260 hp @ 2200 rpm
SWEEP SYSTEM
Hydraulically driven broom
Squeegee with replaceable rubber edging
SWEEPING PATH MAX
10 ft - extendable to 12 ft
3,048 mm
HOPPER CAPACITY VOLUMETRIC
4.5 y^3
3.4 m^3
WATER CAPACITY
360 gal
1,363 L
DUMPING HEIGHT MAX
10 ft
3,048 mm
DUMP LOCATION
Right side
CHASSIS
Conventional
TRAVEL SPEED
Highway speeds
ALTERNATIVE FUEL OPTION
Available
UNIQUE FEATURES
Conveyor flexibility

Road Wizard®

Mechanical Street Sweeper
Dual Engine Squeegee Conveyor

ENGINE
QSF 2.8L
74 hp @ 2500 rpm
SWEEP SYSTEM
Hydraulically driven broom
Squeegee with replaceable rubber edging
SWEEPING PATH MAX
10 ft
3,048 mm
HOPPER CAPACITY VOLUMETRIC
5.4 y^3
4.1 m^3
WATER CAPACITY
360 gal
1,363 L
DUMPING HEIGHT MAX
10 ft
3,048 mm
DUMP LOCATION
Right side
CHASSIS
Cab-Over or Conventional
TRAVEL SPEED
Highway speeds
UNIQUE FEATURES
Conveyor flexibility

Subsidiary of Federal Signal Corporation

Elgin Product Guidebook

Elgin Sweeper

Broom • Vacuum • Regenerative Air

These specifications are meant to serve as a guide in helping you choose the sweeper that best fits your needs. Please contact your Elgin dealer for more detailed information to use in machine bids or specifications.

Megawind®

Combination Leaf/Debris Vacuum & Catch Basin Cleaner/Street Sweeper

ENGINE
John Deere 4045T
115 hp @ 2400 rpm
ARTICULATING BOOM VACUUM HOSE
180 degrees boom travel
200 degrees boom reach
10 ft. radius
CATCH BASIN CLEANING PUMP
290 psi / 23 gpm
SWEEP SYSTEM
Vacuum/Fan
SWEEPING PATH MAX
12 ft
3,658 mm
HOPPER CAPACITY VOLUMETRIC
10.0 y^3, 13.0 y^3
7.65 m^3, 9.94 m^3
WATER CAPACITY
335 gal
1,268 L
DUMPING HEIGHT MAX
Ground level
DUMP LOCATION
Rear
CHASSIS
Conventional
TRAVEL SPEED
Highway speeds

Whirlwind®

Pure Vacuum Street Sweeper

ENGINE
John Deere 4045T
115 hp @ 2400 rpm
SWEEP SYSTEM
Vacuum/Fan
SWEEPING PATH MAX
12 ft
3,658 mm
HOPPER CAPACITY VOLUMETRIC
8.0 y^3
6.0 m^3
WATER CAPACITY
335 gal
1,268 L
DUMPING HEIGHT MAX
Ground level
DUMP LOCATION
Rear
CHASSIS
Cab-Over or Conventional
TRAVEL SPEED
Highway Speeds
UNIQUE FEATURE
Dual 36-inch side brooms and dual action suction nozzles

Crosswind®

Regenerative Air Street Sweeper

ENGINE
John Deere 4045T
74 hp @ 2400 rpm
SWEEP SYSTEM
Regenerative Air/Blower
SWEEPING PATH MAX
12 ft
3,658 mm
HOPPER CAPACITY VOLUMETRIC
8.0 y^3
6.0 m^3
WATER CAPACITY
240 gal
908 L
DUMPING HEIGHT MAX
Ground level
DUMP LOCATION
Rear
CHASSIS
Cab-Over or Conventional
TRAVEL SPEED
Highway speeds
UNIQUE FEAUTURE
EcoInfused™ – Patent Pending Shared Power Technology with Chassis power
ALTERNATIVE FUEL OPTION
Available
SPECIALTY TRACK SWEEPER MODEL
Available

VASCAR GREEN

Crosswind FSX®

High Speed Regenerative Air Street Sweeper

ENGINE
John Deere 4045T
74 hp @ 2400 rpm
SWEEP SYSTEM
Regenerative Air/Blower
SWEEPING PATH MAX
12 ft
3,658 mm
HOPPER CAPACITY VOLUMETRIC
8.0 y^3
6.0 m^3
WATER CAPACITY
240 gal
908 L
DUMPING HEIGHT MAX
Ground level
DUMP LOCATION
Rear
CHASSIS
Cab-Over or Conventional
TRAVEL SPEED
Highway speeds
UNIQUE FEATURE
High speed pickup head
Side air blast – with NEW cast aluminum nozzle
ALTERNATIVE FUEL OPTION
Available

Crosswind GRS®

Regenerative Air Street Sweeper
Glycol Recovery System

ENGINE
John Deere 4045T
74 hp @ 2400 rpm
SWEEP SYSTEM
Regenerative Air/Blower
SWEEPING PATH MAX
12 ft
3,658 mm
HOPPER CAPACITY VOLUMETRIC
8.0 y^3 (750 gal) Glycol
6.0 m^3 (2839 L) Glycol
WATER CAPACITY
240 gal
908 L
DUMPING HEIGHT MAX
Ground level
DUMP LOCATION
Rear
PUMP OFF SYSTEM
300 gpm capacity
1136 lpm
PUMP OUTLET
3" Pipe to 2.5 Flex Canvas Hose
CHASSIS
Cab-Over or Conventional
TRAVEL SPEED
Highway speeds
ALTERNATIVE FUEL OPTION
Available

Elgin Dealer Locations

Elgin Dealer

Dealer Territory Outline

Broom Badger™

Compact 4 wheel mechanical street sweeper

The Elgin Broom Badger™ – Easy to operate. Easy to maintain. No CDL required.

Looking for a maneuverable yet powerful compact mechanical sweeper? If so, consider the Broom Badger™ from Elgin Sweeper. This dual-engine sweeper, is easy to operate and maintain and does not require a CDL to operate making it ideal for municipal and contractor customers who need powerful cleaning without a full-size sweeper. The compact, low-profile design allows easy access to tree-lined streets. The short, 109-inch wheelbase and a tight turning radius give the operator great maneuverability for cul-de-sac curb lines and narrow streets without sacrificing robust sweeping performance.

Chassis/Cab The Broom Badger is mounted on an Isuzu NRR 19,500 lb class 5 cabover chassis that provides highway travel speed for quick transport from job to job and excellent visibility for safer operation. An available air ride suspension option provides additional operator comfort. The standard 12-inch spot mirrors and low-cut windows provide the operator with precise gutter broom viewing. A standard dual-camera and color monitor system provides views to the side broom or rear view. The ergonomically designed control console provides easy, comfortable operation.

Sweep System The efficient sweeping system is powered by an auxiliary Tier 4i Kubota 59-horsepower diesel engine and the variable displacement hydraulic pump provides just the necessary amount of oil.

Broom design The sweeper features dual gutter brooms with a 114-inch sweep path (max). The direct drive brooms feature in-cab control for down pressure and tilt angle. Four-link broom trailing arms provide increased longevity.

Elevator design Featuring a 58.5-inch direct drive squeegee-type conveyor to handle heavy-duty sweeping applications and eliminate the need for curtains and provides increased productivity. The hinged cover allows for easy cleaning and inspection.

Water tank and hopper The sweeper is equipped with a 220-gallon water tank for dust suppression. The side-dumping, 4-cubic yard debris hopper enables extended sweeping intervals for increased productivity on the job. A full payload can be off-loaded from the side dump hopper from ground level to a 10 ft. dump height.

For more information or to request a demonstration of the Elgin Broom Badger contact your Elgin dealer or visit www.elginsweeper.com to locate a dealer nearest you.

P/N 0705390

General Specs

Sweep Path:
Main broom only: 58" (1,473 mm)
Main broom & one side broom: 87" (2,210 mm)
Main broom and 2 side brooms: 114" (2,896 mm)
Chassis Commercial Class 5
Wheel Base 109" (2,769 mm)
Warranty Sweeper, 1 year parts & labor

Sweeper Engine

Make Kubota V2403M
Type 4 cylinder
Displacement 2.4 L
Horsepower 59 @ 2700 RPM
Torque 122 lb. ft. (165 Nm)
Aspiration Turbo charged

Main Broom

Type Prefab disposable Polypropylene filled
Diameter 36" (914 mm)
Broom Material Polypropylene
Length 58" (1,473 mm)
Core Type Disposable steel tube
Speed Variable with engine RPM to: Constant forward
Drive Hydraulic motor with direct drive
Digging Pressure & Wear Control Adjustable spring
Lift control Hydraulic
Mounting Full-floating trailing arm

Side Broom

Type Disposable 4 or 5 segment, plastic
Diameter 36" (914 mm) streetside
42" (1067 mm) curbside
Broom material 26" wire (660 mm)
Disc Construction Steel
Speed Variable with engine RPM, adjustable on side of machine
Drive Full hydraulic
Digging Pressure & Wear Control Hydraulic
Lift control Hydraulic
Flexibility Free-floating and full side-ways oscillation
Mounting Trailing Arm
Down Pressure Indicator In cab dial

Conveyor

Type Squeegee with rubber edging
Material (elevator bottom) Bolt-in two-section abrasion resistant steel plates
Speed Constant
Drive Reversible hydraulically-driven steel chain on polyurethane sprockets
Adjustment Chain adjuster
Lift Control Hydraulic

Instrumentation/Controls

Warning Lamps & Buzzer
Conveyor stall
Warning Lamps
Hopper position
Low water tank level
Engine oil pressure
Engine coolant temp
Shutdown
Hydraulic oil level
Hydraulic oil temp
Engine oil pressure
Engine water temp

Electrical System (Sweeper & Chassis)

Twelve Volt Negative Ground System
110 amp alternator
Battery 2 12v 1500 CCA total
Circuit Protection Automotive fuses
Wiring Number identified with weatherproof connectors
Central wiring and relay locker

Hydraulic System (Sweeper)

Sweep System Pump Load sense piston
Capacity 32 GPM @ 2700 RPM
Fittings 37° JIC
Reservoir Capacity 30 gal (114 L)
Return filter 10 micron
Filter Restriction Gauge
Breather 10 micron
Cooler Externally mounted
Valves Electro-hydraulic with manual override

Hopper

Volumetric Capacity 4 yd^3 (3.02 m^3)
Material volume 3.2 yd^3 (2.45 m^3)
Dumping Left side
Hopper Lift and Dump Controls Hydraulic in-cab
Inspection Door
Offload
Left Side
Minimum dump height 18" (457 mm)
Maximum dump height 120" (3,048 mm)
Maximum hopper dump angle 50°
Design lift capacity 9,000 lbs (4,090 kgs)
Lifting mechanism Two stage scissors with hydraulic cylinder

Water Spray System

Tank construction Polyethylene
Tank capacity 220 gals (833 L)
Pump Electric diaphragm
Spray nozzles
4 across main broom
3 over each gutter broom
5 across front bumper
Controls In-cab pump control

Camera System

Rear-View Camera system

Available Enhancements

- LED strobe
- Arrow stick
- Fire extinguisher
- Hydrant wrench
- Chassis air suspension
- Conveyor flush
- Driven suspension seat

Paint

Body: High-gloss white

Custom colors available

Undercarriage: Black

Chassis

Isuzu NRR. Contact your Elgin Dealer for detailed chassis specifications.

Warranty

Sweeper
1 year parts and labor
Engine
Consult Factory

Your Elgin Dealer is:

Elgin Sweeper Company
1300 W. Bartlett Rd.
Elgin, Illinois, U.S.A. 60120-7529
847-741-5370 Phone
847-742-3035 Fax
www.elginsweeper.com

© 2012 Elgin Sweeper Company. Federal Signal Corporation is listed on the NYSE by the symbol FSS. Broom Badger is a trademark of Elgin Sweeper Company

Effective 11/12
Specifications subject to change without notice.

ELGIN®

Subsidiary of Federal Signal Corporation

Broom Bear®

ELGIN

Built for clean. Backed for life.

ELGIN BROOM BEAR®

POWERFUL, PROVEN, SINGLE ENGINE MECHANICAL SWEEPER

When contractors and municipalities need a durable sweeper that's easy and comfortable to operate, the Elgin Broom Bear is the sweeper of choice. From heavy duty construction debris, like millings or gravel, as well as light street maintenance, the Broom Bear has proven to be one of the most rugged and efficient sweepers in the industry. And the short wheelbase enhances maneuverability and makes the sweeper ideal for sweeping in tight cul-de-sacs.

Mounted on a commercially available conventional chassis with fully dualized controls and an intelligent single engine design that utilizes the chassis engine to power the sweeper, the Broom Bear features a large hopper and water tank, which means more productive sweeping time and fewer scheduled stops. A variable dumping height and 11 inch (279 mm) of hopper side-shift ensures easy dumping.

APPLICATION SOLUTIONS

Elgin Sweeper doesn't offer just one sweeping technology — we take an application-based approach to solving our customers' sweeping needs. Our team works with each customer to ensure that you get a machine that fits your specifications, with the right truck, engine configuration, fuel requirements, and options.

POWERFUL SUPPORT

Elgin sweepers are built for clean, backed for life. Throughout the life of the sweeper, we offer training to your team on proper use and maintenance. We have a world-wide network of experienced dealers with factory trained technicians and a local stock of OEM parts and accessories to ensure total customer peace of mind.

UNMATCHED QUALITY

The Broom Bear became part of the Elgin lineup 15 years ago and has been continuously improved. Manufactured in an ISO:9001 certified plant, Elgin Sweepers are quality inspected and functionally tested prior to shipment. Paint prior to assembly ensures uniform, durable coverage. Broom Bears are proudly assembled in the U.S.A.

HIGH PRODUCTIVITY SWEEP SYSTEM

- High torque diesel engine is teamed with Freightliner® M2 or International® Durastar® chassis to create one of the most powerful and reliable single engine packages in the industry.
- The control console, located between the operator stations, provides quick, easy access. All sweep function switches have tactile-feel surfaces, so operators can work the panel while keeping their eyes focused forward, for increased productivity and safe operation.
- Dual free-floating gutter brooms that adjust to variable road surfaces, a sweep path of 120 inches (3048 mm) with an additional extension of up to 144 inches (3657 mm) when both brooms are pinned to outer points, and a powerful free floating direct drive main broom, ensure reliable and complete pickup of debris.
- Superior dust control is maintained with in-cab zone controlled, dual diaphragm water pumps and a 360 gallon (1363 L) water tank for long sweep times between refills.
- The 4.5 cubic yard (3.4 cu meter) hopper features a double-scissor lifting mechanism that is center mounted for greater stability and trouble free operation. Dumping height is variable up to 10 feet (305 cm) and an 11 inch (279 mm) side shift enables a cleaner more efficient unloading of material. Optional 5.4 cubic yard (4.1 cu meter) hopper available.
- The chassis cab is dualized with OEM parts, including full factory controls, steering, and OEM gauge package that is identical for both left and right operator stations.

EASY TO OPERATE. EASY TO MAINTAIN. BUILT TO LAST.

MAIN BROOM

The main broom is attached to a fully floating trailing arm to better conform to road contours. Performance is optimized using mechanical main broom suspension that dynamically adjusts to various road conditions while on-the-go. Lift and lower functions are controlled from the cab. Main broom arm bearings are sealed, can be re-lubricated and are self-aligning for self-adjustment when experiencing an uneven load which decreases wear and increases main broom life.

SIDE BROOMS

46 inch (1168 mm) trailing arm, free-floating side brooms offer four-way motion and protection against damaging impacts. Pneumatic lift and extension control enhances performance while sweeping within a 10 foot (3048 mm) wide path. Steel plate disc construction adds durability. Broom speed is controlled by hydraulic motors. Broom speed is constant and matched to the conveyor speed for optimal loading performance. Automatic settings control down-pressure, digging-pressure and wear-control. In-cab side broom pressure gauges and down-pressure control are standard.

SQUEEGEE TYPE CONVEYOR

A steel roller chain drives an 11-flight, squeegee-type conveyor to load debris into the hopper. The chain operates on polyurethane sprockets, which last longer. Conveyor speed is constant and matched to the broom speed for optimal loading performance. Conveyor operating height can be raised from the cab up to 3 inches (76 mm) to avoid larger debris and other obstacles. Conveyor bearings are sealed and self aligning for longer life.

HYDRAULIC SYSTEM

The Broom Bear features a 23 gallon (87 L) reservoir with an external level indicator and thermometer. The system includes twin pumps that are direct driven variable displacement piston type with load sensing to adjust flow based on hydraulic oil demand in sweeping gear to maximize efficiency and reduce heat.

SIMPLE, EASY-ACCESS MAINTENANCE

The Broom Bear was designed so that systems are accessible and easy to service. The hydraulic system with o-ring face seal fittings is designed for long life and leak-free operation. Heavy-duty waterproof electrical connectors and color-coded wires have stamped identification for quick location during troubleshooting. A stainless steel toolbox provides additional storage.

COMMERCIAL CHASSIS/SINGLE ENGINE

A high torque diesel engine is teamed with a Freightliner Business Class or International Durastsar chassis to create one of the most powerful and reliable single engine packages in the industry. The straight forward, single engine layout provides greater fuel efficiency and simple maintenance.

POWER TRAIN

An Allison 3500 RDS transmission, a 10,000 lb (4536 kg) front axle and a 23,000 lb (10433 kg) twin air spring suspension 2-speed rear axle complement the powerful single engine and provide the operator with hours of comfortable ride.

LARGE VARIABLE HEIGHT DEBRIS HOPPER

The Broom Bear features a variable-height, right side dump hopper with a capacity of 4.5 cubic yard (3.4 cu meters) volumetric. All hopper lift and dump controls are hydraulic and easily operated from in-cab console mounted controls. A 50 degree dump angle allows material to easily slide out.

A unitized, twin-cylinder, double scissors lift rated at 11,000 lbs (4990 kg) unloads material at a minimum of 38 inches (965 mm) and a maximum of 10 feet (3048 mm). Payload capacity is 10,000 lbs (4536 kg) per load. An 11 inch (279 mm) side shift allows material to be unloaded into the center of a truck or container for cleaner dumping. A full hopper can dump and retract in 20 seconds for short intervals and up to 70 seconds at top height.

SUPERIOR DUST SUPPRESSION

A 360 gallon (1363 L) removable water tank is made of corrosion resistant polyethylene. A 16 foot, 8 inch long (5.1 m) fill hose and water level indicator light located on the control console are standard. Water flow for the side and main brooms is in-cab zone controlled. The self-priming diaphragm pumps (run dry type, 40 psi) provide effective dust control. Three spray nozzles are positioned on each side broom and three on the main broom. Dual water pumps are standard.

MEMORY SWEEP®

Elgin's exclusive Memory Sweep feature allows the operator to resume all previous sweeper settings, even broom tilt if so equipped, with one touch control. This feature enhances operator productivity and reduces operator fatigue. Memory Sweep incorporates a multiscreen display that indicates engine hours and water tank level as well as system diagnostics. This screen also displays optional features such as broom tilt angle and broom hours.

UNIQUE APPLICATION VERSATILITY

CONVEYOR FLEXIBILITY

The Broom Bear comes standard with a squeegee type conveyor designed to provide versatile and reliable performance in a wide range of applications including aggregate and granular material pick up of gravel and millings, ideal for road construction contractors as well as general municipal sweeping, trash, leaves, and other organics.

The Broom Bear is also available with a belt conveyor for applications such as highway sweeping and general municipal sweeping where large debris is encountered.

THE ELGIN SQUEEGEE CONVEYOR

- Chain side-plate constructed from hardened steel for long life and smooth operation.
- Three-piece design for easy service without removing complete assembly.
- Thick, multi-ply rubber-edged flights provides efficient movement of debris into the hopper.
- Unique, interlocking, wavy-plate joint design prevents excessive wear and "thumping" over plate seams.
- Abrasion-resistant steel floor for durability.
- Direct-drive hydraulic motor for optimal power transfer to the conveyor system.

THE ELGIN BELT CONVEYOR

- Full-width cleats move more material quickly to the hopper for maximum productivity.
- Direct-drive hydraulic motor for optimal power transfer to the conveyor system.
- Improved hopper fill by throwing debris towards center of hopper.
- Heavy-duty belt construction resists stretching and requires fewer adjustments.
- Ribs between cleats enhance effectiveness of moving fine debris into the hopper.

The Broom Bear conveyors are designed to be interchangeable should a customer have different applications throughout the sweep season.

LOW EMISSIONS – ALTERNATIVE FUEL OPTION

The Elgin Broom Bear is available in a compressed natural gas (CNG) configuration. The Broom Bear single-engine mechanical sweeper is powered by the Cummins Westport ISL G natural gas engine, making it a fully certified EPA/CARB emission compliant street sweeper. Three 3600 psi composite fuel tanks are conveniently packaged in the rear compartment minimizing impact to chassis wheelbase. The Broom Bear has a generous 51 diesel gallon equivalent fuel capacity - providing ample sweeping range.

EcoInfused Technology

OPTIONAL ENHANCEMENTS

LIFELINER® HOPPER SYSTEM

The LifeLiner® hopper system is a specially designed hopper liner and finish system that greatly improves the life, durability, and functionality of a sweeper hopper.

IN-CAB SIDE BROOM TILT AND EXTENDED REACH

Allows operator to sweep effectively in variably-pitched gutters. On-the-go pitch adjustment with a simple variable rocker switch that displays proper broom angle. Extended reach allows the side broom to follow curbs and tight cul-de-sacs.

LIGHTING PACKAGES

The Broom Bear Sweeper can be equipped with a variety of optional lighting packages. Lighting packages are designed for flexibility based on customer requirements and can include strobes, beacons and arrow sticks.

ADDITIONAL OPTIONS:

- Outside cab, side broom down pressure control
- In-cab, side broom speed control
- 5.4 cubic yard hopper (4.1 cu meter)
- Hydraulic float main broom suspension
- PM10 compliance package
- Functional water control
- Automatic lubrication system
- Front spray bar

SPECIFICATIONS:

SWEEP PATH

Main broom only: 60 in (1524 mm)

Main broom & one side broom: 90 in (2286 mm)

Main broom and 2 side brooms: 120 in (3048 mm) up to 144 in (3657 mm) with pins in outer points

HOPPER CAPACITY

Volumetric Capacity: 4.5 yd^3 (3.4 m^3)
Material volume: 3.3 yd^3 (2.5 m^3)

HOPPER DUMPING

Minimum dump height: 38 in (965 mm)
Maximum dump height: 10 ft (3048 mm)

WATER SPRAY SYSTEM

Tank capacity: 360 gal. (1362 L)

CHASSIS

Conventional

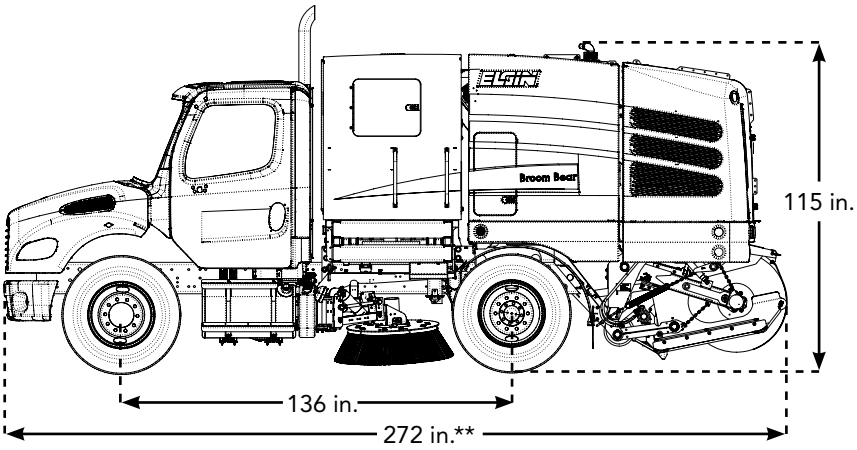

*Consult factory for warranty details **Transport mode

ELGIN SWEEPER IS YOUR PARTNER...

IN THE PLANNING

Instead of one-size-fits-all solutions, we'll work with you to select the sweeping technology that fits your specific needs.

IN THE STREETS

We're here to help you maintain your Elgin and train your operators to ensure the job is done right.

INTO THE FUTURE

Our dealers don't just sell you an Elgin; they're available to answer your questions and provide service for the life of the machine.

WARRANTY

Elgin Sweeper Company backs the Broom Bear sweeper with a one-year limited warranty. The Broom Bear is warranted against defects in material or workmanship for a period of 12 months from the date of delivery to the original purchaser. Optional extended warranty packages are available. Consult your Elgin dealer for complete warranty information.

Your Local Elgin Dealer Is:

ELGIN

Built for clean. Backed for life.

elginsweeper.com

1300 W. Bartlett Road • Elgin, IL 60120 U.S.A.
(847) 741-5370 Phone • (847) 742-3035 Fax

Specifications subject to change without notice. Some items shown may be optional. Elgin® LifeLiner® and Broom Bear® are registered trademarks of Elgin Sweeper Company. Freightliner® is a registered trademark of Daimler Trucks North America, LLC. International® and Durastar® are registered trademarks of Navistar, Inc.

©2014 Elgin Sweeper Company. Effective 8/14 P/N 0705286-D

ELGIN®

Subsidiary of Federal Signal Corporation

Crosswind®

ELGIN

Built for clean. Backed for life.

CROSSWIND® – RELIABLE, VERSATILE REGENERATIVE AIR SWEEPER

Searching for a reliable, versatile, regenerative air sweeper? Elgin Sweeper Company has the answer. The Elgin Crosswind combines superior performance with a low-maintenance, simplified design. The wide sweeping path is suited for municipalities, contractors, airport applications and general maintenance sweeping. From the high performance sweep system to the user-friendly controls, the Crosswind has been designed and manufactured to the exacting quality standards that have made Elgin a leading sweeper manufacturer. Thanks to a worldwide factory-trained dealer network, you can be sure of complete satisfaction on delivery and far down the road.

APPLICATION SOLUTIONS

Elgin Sweeper doesn't offer just one sweeping technology — we take an application-based approach to solving our customers' sweeping needs. Our team works with each customer to ensure that you get a machine that fits your specifications, with the right truck, engine configuration, fuel requirements, and options.

POWERFUL SUPPORT

Elgin Sweepers are built for clean, backed for life. Throughout the life of the sweeper, we offer training to your team on proper use and maintenance. We have a world-wide network of experienced dealers with factory trained technicians and a local stock of OEM parts and accessories, to ensure total customer peace of mind.

UNMATCHED QUALITY

The Crosswind was introduced nearly 30 years ago and has been continuously improved in design and production. Elgin sweepers are manufactured in an ISO:9001 certified manufacturing plant. Products are painted prior to assembly and quality tested. Elgin Crosswinds are proudly assembled in the U.S.A. using only the finest materials.

POWERFUL CLEANING SYSTEM

How well a street sweeper picks up material is determined by its overall design. The air conveyance, sweeping, dust suppression, and maintenance systems must work together as an integrated cleaning system to achieve maximum sweeping performance.

HIGHLY EFFICIENT AIR CONVEYANCE SYSTEM

Efficient air flow, including a superior vacuum source and air routing path, is at the heart of the Crosswind.

- High volume air flow at high velocity results in exceptional one-pass pickup while eliminating plugging that can occur in similar type sweepers.
- A nine-vane closed face turbine fan is powered by a turbo-charged diesel auxiliary engine for maximum airflow.
- A centrifugal dust separator minimizes pressure loss and maximizes sweep performance and fan life.

HIGH PRODUCTIVITY SWEEP SYSTEM

The Crosswind's wide sweep path picks up debris close to the curb and across a wide expanse of road.

- The large, hydraulically driven, 42 in. (1067 mm) side brooms provide a 12 ft. (3658 mm) wide sweep path.
- Work with brooms fully extended or add the optional full broom retract feature for powerful scrubbing action in front of the pick-up head.
- An optional center broom provides added digging power for heavily-compacted debris.

SUPERIOR DUST SUPPRESSION

Proper use of water is essential for dust suppression, sweeping performance, and longevity of sweeper components.

- Two heavy-duty water pumps – one for the pickup head and suction hose and one for the side brooms – are easy to access and capable of run-dry operation.
- The durable 240 gallon (908 L) polyethylene water tank is removable for service.
- Ample water is provided by 16 high-quality, agricultural-grade water nozzles (standard), all in easy-to-access locations.
- High/low selectable pump speeds allow for application-dependent dust supression.

SIMPLE, EASY-ACCESS MAINTENANCE

The Crosswind is designed so that systems are accessible and easy to service.

- Large access doors allow for quick and easy inspection without tilting the hopper. The engine oil and pneumatic pressure can be checked, hydraulic filter changed, and the fan bearings greased.
- The hydraulic system with o-ring face seal fittings is designed for long life and leak-free operation.
- Heavy-duty, waterproof electrical connectors and color-coded wires have stamped identification for quick location during troubleshooting.

THE ELGIN CROSSWIND

HIGH CAPACITY/EFFICIENT LOADING

The 8 cu. yard (6 m³) capacity hopper provides extended sweeping time. Abrasion-resistant steel inlet deflector directs debris flow to the center of the hopper, ensuring even, efficient material loading for maximum capacity utilization.

COMPACT DESIGN

The sweeper mounts on conventional or cab-over chassis with short wheelbases, enabling a tight turning radius for better reach in cul-de-sac sweeping, and greater maneuverability around tight corners. The standard auto pickup in reverse allows for quick change of sweeping locations.

COMPREHENSIVE WATER SYSTEM

This system controls dust during sweeping and lubricates the sweep system for protection from abrasive materials. A removable polyethylene tank provides 240 gallons (908 L) of clean water. 16 spray nozzles (standard) are located at the side brooms, pick-up head, and intake tube to provide maximum lubrication and dust control. Includes in-cab water level gauge.

UNIQUE TRAILING ARM SIDE BROOMS

Trailing arms provide special 4-way action to closely follow road contours, provide inward motion safety for obstacles, and maintain a consistent broom angle even as the broom starts to wear. Digging pressure is adjustable in-cab. Brooms can be extended outward for maximum sweep path. The optional full broom retract feature allows for scrubbing action directly in front of the pick-up head.

EASY ACCESS SERVICE DOORS

The auxiliary engine, water system, hydraulic system and pneumatic system components can be easily accessed behind two full-service doors, without tilting the hopper.

HIGH-PERFORMANCE SWEEPER ENGINE

The heavy-duty John Deere 4045T diesel provides exceptional power and extended service life. Auto shut-down of engine functions comes standard. The latest EPA and CARB emission compliant packages are available.

HIGH PRODUCTIVITY SWEEP SYSTEM

A 90 in (2286 mm) wide pick-up head and dual 42 in (1067 mm) side brooms create a wide sweep path for maximum productivity. A 12 ¾ in (324 mm) diameter suction hose accepts large debris. Quick disconnect allows operator to inspect and clean hose and intake tube without raising hopper. The vacuum enhancer/ leaf bleeder facilitates sweeping under light and bulky debris conditions. A traditional tilting hopper (50° dump angle) and drop-down hopper screens make the Crosswind easy to clean.

SUPERIOR REGENERATIVE AIR SWEEPER DESIGN

POWERFUL BLOWER

The Crosswind features a high velocity, 9-vane closed face turbine fan with a rubber-lined housing for extended life. The vanes are constructed from Hardox® brand steel for durability. A secure, multiple V-groove power belt adjusts without repositioning engine.

ERGONOMIC CONTROLS

The Crosswind's centrally-mounted console features rocker switches for all sweep functions and complete gauges (aux. engine coolant temperature, oil pressure, charging voltage, fuel level, engine hour meter, engine RPM) for quick review of system conditions. Side broom down pressure controls and automotive-style fuses further enhance ease of operation and maintenance. A back up camera and alarm are standard for increased operational awareness and safety.

MEMORY SWEEP®

Elgin's optional Memory Sweep™ system allows the operator to resume all previous sweep settings, even broom tilt (if so equipped), with one touch control. This feature enhances productivity and reduces fatigue. Memory Sweep incorporates a multi-screen display that indicates system diagnostics as well as optional features such as broom tilt angle, vacuum enhancer position, and broom hours.

APPLICATION-SPECIFIC CONFIGURATIONS

CROSSWIND SHARED POWER
Economical Tier 4 Interim Compliant

The Crosswind featuring a patent-pending Shared Power system is Tier 4 Interim emissions compliant. The system allows power to be transferred from the chassis to the auxiliary engine. Power can come from the chassis engine or from vehicle momentum as regenerative braking. Power normally lost to heat by braking can be immediately directed back to the auxiliary engine, resulting in improved performance and reduced fuel consumption. Normally, the chassis engine is underutilized while sweeping. That potential is now shared with the auxiliary engine resulting in reliable Crosswind performance.

*Shown with optional custom wrap graphic

CROSSWIND FSX™
Top Performance On and Off the Runway

If you need top performance for airport applications, the Crosswind FSX is for you. With a unique pickup head, at 15 mph (24 km/h) the FSX can sweep 950,000 sq. ft. (88,255 sq. m) of runway per hour, and sweeps tarmac, gate areas and access roadways at slower speeds. Results are tested and proven.

Special options are available including: poly side brooms, a high-performance cast aluminum side air blast nozzle, pick-up head casters, and a heavy duty magnet mounted to front bumper.

CROSSWIND GRS
Glycol Recovery Sweeper

The Crosswind GRS is ideal for sweeping debris and removing environmentally damaging glycol and other deicing fluid runoff on runways and gate locations. The GRS does not require any modifications when switching from sweeping debris to glycol removal in snow and ice conditions.

The system features a blower enhanced with a flow blocker system to allow for quick glycol unloading. Specially designed baffles in the hopper help reduce liquid slosh without impeding sweeping or dumping operations. The hopper capacity is 750 gal (2839 L).

CROSSWIND SPECIALTY TRACK SWEEPER
Racetrack Cleaning and Drying

The Crosswind Specialty Track Sweeper was engineered with input from racetack officials. It includes features for racetrack sweeping and maintenance, including a hydraulically-driven, plastic bristle side broom on one side and a high-performance cast aluminum air blast nozzle on the other. The Track Sweeper can clean a wide, 117 in (2972 mm) path with its side broom and pickup head. Its side air blast nozzle can blow debris off the track for distances up to 50 ft (15.24 m).

The Track Sweeper quickly and efficiently removes standing water, rubber, and debris from in and around the pit area for the overall safety of the racers, their crews, and spectators. It features an internal dust-suppression system to reduce airborne dust and prevent water from being applied directly to the racing surface.

OPTIONAL ENHANCEMENTS

WANDERING HOSE

The versatile, hydraulic-assist hose gets into hard to reach places and is effective in catch basin cleaning. It handles multiple tubes for especially deep catch basin cleaning.

LIFELINER® HOPPER SYSTEM

The LifeLiner® hopper liner and finish system greatly improves the life, durability, and dumping functionality of a sweeper hopper. It is backed by a lifetime warranty*.

STAINLESS STEEL HOPPER SYSTEM

This complete hopper body is constructed entirely of 304 grade stainless steel to provide maximum service life, even in the most corrosive applications.

ADDITIONAL OPTIONS:

- Center broom
- Memory Sweep™
- Side broom tilt
- High pressure washdown/ high pressure pump
- Front spray bar
- Hopper deluge
- Auxiliary hydraulic pump
- PM-10 compliant
- Full side broom retract
- Compressed natural gas engines
- In-cab hopper dump
- Variable speed side brooms
- Full-width magnet
- Rotating beacon
- Auxiliary lighting packages
- In-cab control for vacuum enhancer
- Broom hour meter
- Additional water: 140 gal. (530L), 280 gal (1060L), 360 gal. (1363L)
- R or L inspection door
- Cast aluminum side air blast
- Enhanced water control

SPECIFICATIONS:

SWEEP SYSTEM
High performance regenerative air
Sweeping path: 12 ft. (3658 mm)
Side brooms: 42 in. (1067 mm)

PICK-UP HEAD
High flow with pressure and vacuum chamber
2700 sq. in. (17,450 sq. cm.)
Pressure hose diameter:
14 in. (356 mm)
Suction hose diameter:
12 3/4 in. (324 mm)

AUXILIARY ENGINE
John Deere 4045T
Tier 4 interim low emission diesel
*Tier 2 & 3 for export only

CHASSIS
Choice of conventional or cab-over chassis

TRAVEL SPEED
Highway speeds

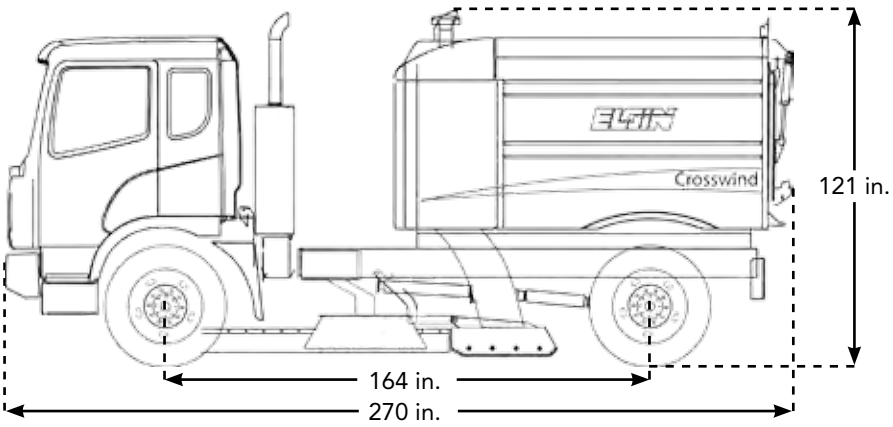

*Consult factory for warranty details

ELGIN SWEEPER IS YOUR PARTNER...

IN THE PLANNING

Instead of one-size-fits-all solutions, we'll work with you to select the sweeping technology that fits your specific needs.

IN THE STREETS

We're here to help you maintain your Elgin and train your operators to ensure the job is done right.

INTO THE FUTURE

Our dealers don't just sell you an Elgin; they're available to answer your questions and provide service for the life of the machine.

WARRANTY

Elgin Sweeper Company backs the Crosswind sweeper with a one-year limited warranty. The Crosswind is warranted against defects in material or workmanship for a period of 12 months from the date of delivery to the original purchaser. Optional extended warranty packages are available. Consult your Elgin dealer for complete warranty information.

Your Local Elgin Dealer Is:

ELGIN
Built for clean. Backed for life.

elginsweeper.com

1300 W. Bartlett Road • Elgin, IL 60120 U.S.A.
(847) 741-5370 Phone • (847) 742-3035 Fax

Specifications subject to change without notice. Some items shown may be optional. Elgin® Crosswind® Crosswind FSX® and Memory Sweep™ are registered trademarks of Federal Signal Corporation. Hardox® is a registered trademark of Hardox wear plate. Federal Signal Corporation is listed on the NYSE by the symbol FSS. ©2013 Elgin Sweeper Company. Effective 7/13 P/N 0705223-L

ELGIN®

Subsidiary of Federal Signal Corporation

Eagle®

ELGIN

Built for clean. Backed for life.

ELGIN EAGLE®

RELIABLE, HEAVY DUTY, VERSATILE MECHANICAL BROOM SWEEPER

If you need a proven mechanical broom sweeper with reliable heavy duty performance, high dump capability and superior operator comfort look to the Elgin Eagle®. The Eagle, first introduced as part of the Elgin family of sweepers in 1988 has been continuously improved, retaining all of the features that made it popular. These include a simplified dual-engine design, increased operator efficiency and productivity, along with the latest technology for superior results.

If you haven't tried sweeping with the Eagle – now is the time to take another look.

APPLICATION SOLUTIONS

Elgin Sweeper doesn't offer just one sweeping technology — we take an application-based approach to solving our customers' sweeping needs. Our team works with each customer to ensure that you get a machine that fits your specifications, with the right truck, engine configuration, fuel requirements, and options.

POWERFUL SUPPORT

Elgin sweepers are built for clean, backed for life. Throughout the life of the sweeper, we offer training to your team on proper use and maintenance. We have a world-wide network of experienced dealers with factory trained technicians and a local stock of OEM parts and accessories, to ensure total customer peace of mind.

UNMATCHED QUALITY

The Eagle was introduced 25 years ago and has been continuously improved. Manufactured in an ISO:9001 certified plant, Elgin Sweepers are quality inspected and functionally tested prior to shipment. Paint prior to assembly ensures uniform, durable coverage. Eagles are proudly assembled in the U.S.A.

HIGH PRODUCTIVITY SWEEP SYSTEM

- Mounted on a selection of conventional or commercial cabover chassis. Conventional chassis feature a five speed overdrive automatic transmission and commercial cabover chassis feature a six speed wide ratio automatic transmission.
- Sweep system is powered by a low emission, 74hp Cummins diesel engine, (55 kW @ 2500 RPM), one of the most powerful standard auxiliary engines available on a mechanical sweeper.
- Control console, located between the operator stations, provides quick, easy access for increased productivity and safe operation.
- Dual free-floating gutter brooms adjust to variable road surfaces, a sweep path of 10 feet (305 cm) and a powerful free floating direct-drive main broom, ensure reliable and complete pickup of debris.
- Superior dust control is maintained with an in-cab zone-controlled diaphragm water pump and a 360 gallon (1363 L) water tank for long sweep times between refills.
- 4.5 cubic yard (3.4 cubic meters) hopper features a center mounted double-scissors lifting mechanism for greater stability and trouble-free operation. Dumping height is variable up to 10 feet (305 cm) and an 11 inch (279 mm) side shift enables a cleaner more efficient unloading of material.
- Flexible range of chassis choices including cabover or conventional chassis. The cabover chassis cab is dualized with OEM parts, including full factory controls, steering, and OEM gauge package that is identical for both left and right operator stations.

EASY TO OPERATE. EASY TO MAINTAIN. BUILT TO LAST.

10 ft sweep path

MAIN BROOM

A free-floating trailing arm main broom conforms to road contours. Powered by the auxiliary engine, the main broom works at variable speeds that coincide with auxiliary engine RPM. Productivity is enhanced with automatic settings for down pressure, and wear control. Main broom lift, lower and down-pressure functions are controlled from the cab. The main broom arm bearings are sealed and self-aligning for self-adjustment when experiencing an uneven load. The self-adjusting system guards against premature wear.

SIDE BROOMS

46 inch (1168 mm) trailing arm, free-floating side brooms offer four-way motion and protection against damaging impacts. Pneumatic lift and extension control enhances performance while sweeping within a 10 foot (305 cm) wide path. Steel plate disc construction adds durability. Broom speed is controlled by hydraulic motors operating at variable speeds that coincide with auxiliary engine RPM. Automatic settings control down-pressure, digging-pressure and wear-control. In-cab side broom pressure gauges and down-pressure control are standard.

NO JAM DEBRIS CONVEYOR

The Eagle's conveyor uses molded-in full-width cleats that move large debris without jamming. High-strength belt material provides long wear and maximum uptime. The conveyor is controlled from in-cab, including reverse. A built-in washdown makes cleanup quick and easy.

AUXILIARY ENGINE

A low-emission 74 hp Cummins diesel engine (55 kW @ 2500 RPM) provides variable control over sweeper functions independent of the chassis. It is among the most powerful standard auxiliary engines available on a mechanical sweeper. Max fuel capacity is 50 gallons (189 L). The engine includes a two-stage, dry-type air cleaner with safety element, pre-cleaner, and optional in-cab restriction indicator. In-cab gauges and warning lights are displayed for all engine functions including tachometer, hour meter, volt meter, fuel level, coolant temperature, oil pressure, hydraulic oil filter restriction, engine running, and air filter restriction.

HYDRAULIC SYSTEM

The Eagle features a 34 gallon (128 L) reservoir with an external level indicator and thermometer, and a 13.5 GPM (51 LPM) triple section gear pump capacity at 1200 RPM of the auxiliary engine.

SIMPLE, EASY-ACCESS MAINTENANCE

The Eagle was designed so that systems are accessible and easy to service. Large access doors allow for 180 degree accessibility to engine maintenance components. The hydraulic system with o-ring face seal fittings is designed for long life and leak-free operation. Heavy-duty waterproof electrical connectors and color-coded wires have stamped identification for quick location during troubleshooting. A stainless steel toolbox provides additional storage.

LARGE VARIABLE HEIGHT DEBRIS HOPPER

The Eagle features a variable-height, right side dump hopper with a capacity of 4.5 cubic yard (3.4 cu meters) volumetric. All hopper lift and dump controls are hydraulic and easily operated from in-cab console mounted controls. A 50 degree dump angle allows material to easily slide out.

A unitized, twin-cylinder, double scissors lift rated at 11,000 lbs (4990 kg) unloads material at a minimum of 38 inches (965 mm) and a maximum of 10 feet (3048 mm). Payload capacity is 10,000 lbs (4536 kg) per load. An 11 inch (279 mm) side shift allows material to be unloaded into the center of a truck or container for cleaner dumping. A full hopper can dump and retract in 20 seconds for short intervals and up to 70 seconds at top height.

SUPERIOR DUST SUPPRESSION

A 360 gallon removable water tank is made of corrosion resistant polyethylene. A 16 foot, 8 inch long (5.1 m) fill hose and water level indicator lights located on the control console are standard. Water flow for the side and main brooms is controlled in-cab. The self-priming diaphragm pump (run dry type, 40 psi) provides effective dust control. Three spray nozzles are positioned on each side broom and three on the main broom.

MEMORY SWEEP®

Elgin's exclusive Memory Sweep feature allows the operator to resume all previous sweeper settings, even broom tilt if so equipped, with one touch control. This feature enhances operator productivity and reduces operator fatigue. Memory Sweep incorporates a multi-screen display that indicates engine hours and water tank level as well as system diagnostics. This screen also displays optional features such as broom tilt angle and broom hours.

UNIQUE APPLICATION VERSATILITY

CONVEYOR FLEXIBILITY

The Eagle comes standard with a no jam debris conveyor belt featuring molded-in full-width cleats that move debris without jamming. High-strength belt material provides long wear and maximum uptime. The Eagle is specifically designed to provide versatile and reliable performance in a wide range of applications including highway sweeping, general municipal sweeping, trash, leaves, and other organics.

The Eagle is also available with a squeegee-type conveyor for applications such as aggregate and granular material pick up of gravel and millings; ideal for road construction contractors. Conveyor rotation direction is controlled in-cab and conveyor speed is variable with auxiliary engine RPM providing maximum on-the-go productivity and ease of cleaning.

THE ELGIN BELT CONVEYOR

- Full-width cleats move more material quickly to the hopper for maximum productivity.
- Direct-drive hydraulic motor for optimal power transfer to the conveyor system.
- Improved hopper fill by throwing debris towards center of hopper.
- Heavy-duty belt construction resists stretching and requires fewer adjustments.
- Ribs between cleats enhance effectiveness of moving fine debris into the hopper.

THE ELGIN SQUEEGEE CONVEYOR

- Chain side-plate constructed from through hardened steel for long life and smooth operation.
- Three-piece design for easy service without removing complete assembly.
- Thick, multi-ply rubber-edged flights provides efficient movement of debris into the hopper.
- Unique, interlocking, wavy-plate joint design prevents excessive wear and "thumping" over plate seams.
- Abrasion-resistant steel floor for durability.
- Direct-drive hydraulic motor for optimal power transfer to the conveyor system.

The Eagle conveyors are designed to be interchangeable should a customer have different applications throughout the sweep season.

WATERLESS DUST CONTROL

The Elgin Eagle is available with an optional dry dust control system. This model maintains all the features and performance that have made the Eagle a popular four wheel mechanical sweeper, but does not require water for dust suppression. This means increased pick-up of fine particles over wet dust control sweepers, reliable year-round sweeping, and considerable water conservation. The Eagle with dry dust control's patented dust control system includes a dust skirting system, dust separator in the hopper, and a dust control fan with a maintenance-free filter. Operators sweep more and spend less time filling tanks, enhancing productivity. This model is ideal for industrial applications where heavy, dry materials must be swept up while keeping dust emissions to an absolute minimum. *Consult factory for waterless model details.*

OPTIONAL ENHANCEMENTS

CONVENTIONAL CHASSIS
Conventional chassis are built for sweeping and provide outstanding visibility, comfort, safety, and productivity. The short wheel base and unique steering geometry allow maximum maneuverability. A choice of Freightliner or International conventional chassis are also available.

LIFELINER® HOPPER SYSTEM
The LifeLiner® hopper system is a specially designed hopper liner and finish system that greatly improves the life, durability, and functionality of a sweeper hopper. The LifeLiner hopper system is backed by a lifetime warranty.*

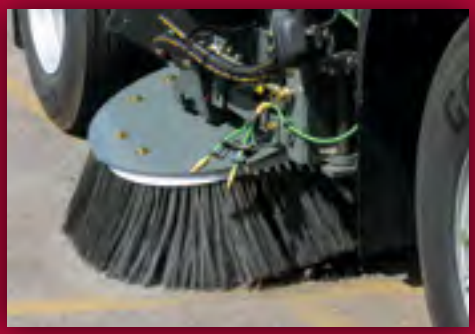

IN-CAB SIDE BROOM TILT AND EXTENDED REACH
Allows operator to sweep effectively in variably-pitched gutters. On-the-go pitch adjustment with a simple variable rocker switch. Extended reach allows the side broom to follow curbs and tight cul-de-sacs.

ADDITIONAL OPTIONS:

- Outside cab, side broom down pressure control
- Outside cab, main broom down pressure control
- In-cab, side broom speed control
- Strobe lamp
- Arrowstick
- Automatic lubrication system
- Front spray bar
- Alternative Conveyor - Squeegee with rubber edging

SPECIFICATIONS:

SWEEP PATH
Main broom only:
60 in (1524 mm)

Main broom & one side broom:
90 in (2286 mm

Main broom and 2 side brooms:
120 in (3048 mm)

HOPPER CAPACITY
Volumetric Capacity: 4.5 yd^3 (3.4 m^3)
Material volume: 3.3 yd^3 (2.5 m^3)

HOPPER DUMPING
Minimum dump height: 38 in (965 mm)
Maximum dump height: 10 ft (3048 mm)

WATER SPRAY SYSTEM
Tank capacity: 360 gal. (1362 L)

AUXILIARY ENGINE
Cummins 74hp EPA compliant engine

CHASSIS
Conventional or cab-over

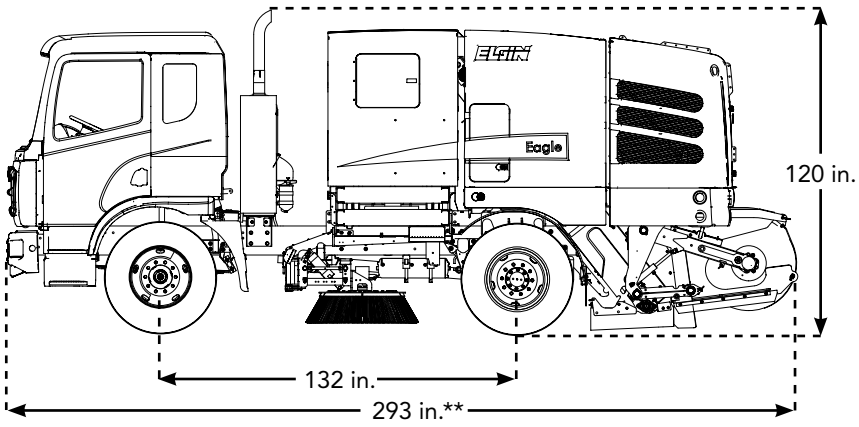

*Consult factory for warranty details **Transport mode

ELGIN SWEEPER IS YOUR PARTNER...

IN THE PLANNING

Instead of one-size-fits-all solutions, we'll work with you to select the sweeping technology that fits your specific needs.

IN THE STREETS

We're here to help you maintain your Elgin and train your operators to ensure the job is done right.

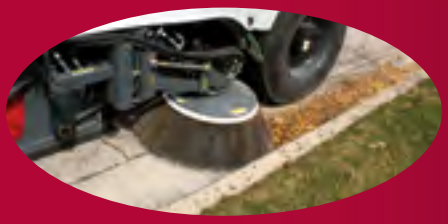

INTO THE FUTURE

Our dealers don't just sell you an Elgin; they're available to answer your questions and provide service for the life of the machine.

WARRANTY

Elgin Sweeper Company backs the Eagle sweeper with a one-year limited warranty. The Eagle is warranted against defects in material or workmanship for a period of 12 months from the date of delivery to the original purchaser. Optional extended warranty packages are available. Consult your Elgin dealer for complete warranty information.

Your Local Elgin Dealer Is:

ELGIN

Built for clean. Backed for life.

elginsweeper.com

1300 W. Bartlett Road • Elgin, IL 60120 U.S.A.
(847) 741-5370 Phone • (847) 742-3035 Fax

Specifications subject to change without notice. Some items shown may be optional. Elgin,® Eagle® and LifeLiner® are registered trademarks of Elgin Sweeper Company.

©2014 Elgin Sweeper Company. Effective 2/14 P/N 0705394

ELGIN®

Subsidiary of Federal Signal Corporation

Pelican®

ELGIN

Built for clean. Backed for life.

PELICAN® - LEGENDARY, DEPENDABLE PERFORMANCE.

To assure that the legendary Elgin Pelican continues to meet the needs of its customers and the industry, Elgin Sweeper raised the bar again and set a new benchmark for the industry standard. Based on a design that has been continually improved since 1914, the newest Pelican model combines maneuverability, economy, serviceability, and single-lane dumping with a sweep system that easily handles heavy, compacted dirt and bulky debris, as well as smaller particles found in the street. If you need an all-around sweeper with incredible digging power the Pelican is the perfect solution.

- Isolation-mounted cab for cleaner, quieter, more comfortable operation
- Improved 360° visibility
- Incredible ease of operation
- Superior durability, stability, and maneuverability
- Easy access for service and maintenance

Customized with your choice of options, the Pelican is a durable, reliable answer to your sweeper needs.

APPLICATION SOLUTIONS

Elgin Sweeper doesn't offer just one sweeping technology – we take an application-based approach to solving our customers sweeping needs. Our team works with each customer to ensure the you get a machine that fits your specifications, with the right chassis, engine configuration, fuel requirements and options.

POWERFUL SUPPORT

Elgin Sweepers are built for clean, backed for life. Throughout the life of the sweeper, we offer training to your team on proper use and maintenance. We have a world-wide network of experienced dealers with factory trained technicians and a local stock of OEM parts and accessories, to ensure total customer peace of mind.

UNMATCHED QUALITY

The Pelican has roots dating back to 1914 and has been continuously improved in design and production. Elgin sweepers are manufactured in an ISO:9001 certified manufacturing plant. Products are painted prior to assembly and quality tested. Elgin Pelicans are proudly assembled in the U.S.A. using only the finest materials.

UNIQUE SINGLE-ENGINE THREE-WHEEL DESIGN

The durable purpose-built chassis features a compact frame to maximize maneuverability and position the load low and between front wheels for stability. The high steering angle and tight turning radius allow sweeping extremely close to obstacles and following curb lines.

POWERFUL BROOM SYSTEM

Hydraulically-driven free-floating side and main brooms work as a system to sweep material from the curb and street into the debris hopper. Side brooms protrude up to 13 in (330 mm) beyond the tire to capture more curb debris. The large main broom features variable-speed and down-pressure to adapt to changing conditions and follow road contours.

NO-JAM CONVEYOR

The Pelican's exclusive No-Jam conveyor features molded-in full-width cleats that carry more large debris as well as small fines efficiently into the hopper. Material loads to the front first to allow maximum use of the 3.5 cu yd (2.7 cu m) hopper.

360° VISIBILITY AND OPERATOR ERGONOMICS

The Pelican's isolation-mounted cab provides a clean, quiet, and comfortable environment for the operator. Large windows, see-through doors and full-width windshield allow for 360° degree visibility.

EASY MAINTENANCE

Access to service points is simple with most accessible from ground-level. O-ring face seal hydraulic fittings are used and the electrical system features snap-together connections and color-coded wires for quick identification. The unit is equipped with a combination of in-cab and site gauges to monitor fluid levels.

ECOINFUSED™ TECHNOLOGY

Elgin Sweeper has made advancing the use of cleaner, safer, and more efficient technologies for sweeping roads and streets a priority, with innovations that provide the powerful performance, fuel economy and overall value our municipal and contractor customers demand. Today's environmentally efficient Pelican is designed with exclusive EcoInfused Technology, representing years of unmatched innovation and success combining the science of horsepower management with the ability to do more with less.

DURABLE, RELIABLE, AND EASY TO USE

DURABLE, PURPOSE-BUILT CHASSIS

The Pelican's heavy-duty construction and compact frame ensures a tight turning radius and years of reliable, low-maintenance operation. A balanced design provides stable sweeping and dumping. The hopper load is positioned low between the two front wheels for stability and safety. The axle support and hopper lift system are integral parts of the chassis.

OUTSTANDING MANEUVERABILITY

The Pelican's high steering angle and tight turning radius allows for quick turns, sweeping extremely close to obstacles and following curbs without climbing or scuffing tires. Dual-tire guide wheels increase stability and steering traction.

EFFICIENT, COMFORTABLE CAB

The clean, quiet and spacious isolation-mounted cab features large windows, wide see-through doors and a full-width windshield for 360° visibility. The center console is easily accessed from both left and right driving positions. Fingertip controls include illuminated and graphically identified gauges and rocker switches.

SPRUNG GUIDE WHEEL

The shock-absorbing, two-spring suspension design increases comfort in the cab while reducing stress on the sweeper frame-especially when operating in pothole conditions or on rough, uneven roads.

SINGLE ENGINE POWERED

The Pelican is powered by the John Deere 4045T, 4 cylinder, turbocharged diesel engine. The engine is capable of operating on bio-diesel up to B20.

LOW-MAINTENANCE DRIVE SYSTEM

Featuring a unique wheel motor design that delivers outstanding power with minimal maintenance, the Pelican can handle steep grades with no problem. Integrated sensors provide precise road speed measurement and adjust power requirements according to the load.

HEAVY-DUTY BRAKE SYSTEM

The Pelican features three caliper, power disc brakes and a dynamic braking design that significantly reduces wear on service brakes. All brake components are easy to access and economical to maintain.

HYDRAULIC SWEEP SYSTEM

Controlled by engine RPM and operated independently of ground speed and direction, the Pelican's broom speed provides digging power at slow or zero ground speeds. A foot pedal controls speed and sweeper direction through the hydrostatic transmission.

SUPERIOR MECHANICAL SWEEPER DESIGN

MAIN BROOM
The 35 in x 66 in (889 mm x 1676 mm) hydraulically driven polypropylene main broom features variable speed (variable with engine RPM) for optimal sweeping in changing conditions. To protect the broom mechanism, the broom raises automatically when the sweeper is reversed and is returned to its sweep position and previously set down pressure when a forward direction is resumed.

SIDE BROOM
Hydraulically driven side brooms are rugged construction, 36 in (914 mm) in diameter and protrude up to 13 in (330 mm) beyond the outside of the tire while sweeping to capture more gutter debris.

NO-JAM DEBRIS CONVEYOR
The exclusive conveyor system features molded-in full width cleats that move large debris without jamming. High-strength belt material on the conveyor delivers long wear for maximum uptime. An optional built-in washdown provides quick and easy clean-up.

VARIABLE HEIGHT FRONT DUMP HOPPER
The Pelican's front dump hopper is ideal for single-lane dumping, which ensures minimal traffic interruption. The hopper can be dumped from ground level up to 9 ft 6 in (2895 mm) high. The load can be easily observed from the cab by lifting and rolling the hopper. The hopper's 3.5 cu yd (2.7 cu m), 9,000 lb (4082 kg) capacity provides maximum sweep time. For easy inspection, the hopper rolls out and rests on the ground.

CORROSION-RESISTANT WATER SYSTEM
A corrosion-resistant polyethylene water tank supplies the dust suppression system with 220 gallons (833 L) of water. The exclusive Elgin water pump can run dry without damaging the machine's water system. For operator convenience and ease of maintenance, a water-level gauge is visible from the cab.

EASE OF MAINTENANCE
Easy servicing lowers ownership costs and increases sweeper usage. O-ring face seal hydraulic fittings assure leak-free connections, while the electrical system's weatherproof snap-together connectors and stamped color-coded wires allow for quick identification. To ensure easy monitoring of fluid levels, the hydraulic tank directly behind the cab features a sight glass inspection tube.

MEMORY SWEEP®
Elgin's exclusive Memory Sweep feature allows the operator to resume all previous sweeper settings, even broom tilt if so equipped, with one touch control. This feature enhances operator productivity and reduces operator fatigue. Memory Sweep incorporates a multi-screen display that indicates engine hours and water tank level as well as system diagnostics. This screen also displays optional features such as broom tilt angle and broom hours.

MEMORY SWEEP

WATERLESS PELICAN

The Pelican with optional dry dust control maintains all the popular features and sweeping performance that have made the Pelican the best selling three-wheel sweeper–without the use of water for dust suppression. This means increased pick-up of fine particles over traditional, wet dust control sweepers, proven reliable year-round sweeping and significant water conservation.

DRY DUST CONTROL SYSTEM

The Pelican with dry dust control features a patented system that includes a dust skirting system, dust separator in the hopper, and a dust control fan with a maintenance-free filter, working together to control fugitive dust without the use of spray water. The Pelican's waterless dust control system means operators sweep more and spend less time filling tanks enhancing productivity. Without water, mud doesn't build up on components, reducing clean-up time at the end of the shift. Since there is no water, sweeping in freezing weather conditions is possible which helps meet the growing demand for quick pick-up of winter-time road sand, salt, and cinders. Perhaps the most important benefits are those for the environment including a smaller water footprint, as well as reduced road silt that can be left as a film from waterbased dust control sweepers.

PATENTED FILTRATION SYSTEM

The powerful vacuum system on the sweeper creates an air stream through the debris hopper, conveyor, and skirted areas. The inward rushing air carries the airborne dust into the debris hopper where it's allowed to settle out with the rest of the swept debris. A majority of the fugitive dust falls into the hopper with only a fraction of the dust making it to the filter. When the filter becomes loaded, it can be mechanically cleaned with an on-board cleaning system so sweeping can continue. A long life, low maintenance, dry filter element is installed between the debris hopper and the fan.

*Industrial Pelican Option Available - consult factory for details.

OPTIONAL ENHANCEMENTS

LIGHTING PACKAGES
A variety of lighting packages are available for the Pelican to enhance safety and visibility.

LIFELINER® HOPPER SYSTEM
The LifeLiner® system is a specially designed hopper liner and finish system that greatly improves the life, durability, and functionality of a sweeper hopper.

LIMB GUARD
Heavy-duty guards surround cab and protect sweeper by guiding low-hanging tree limbs up and over the Pelican. Available in right hand, left hand, or dual configuration.

ADDITIONAL OPTIONS

- Auto-Lube automatic lubrication system
- Conveyor, lower roller washout
- Air suspension seat(s)
- Air conditioner
- Cold weather start aid
- Engine pre-cleaner
- In-cab side broom tilt

SPECIFICATIONS:

SWEEPING PATH
One side broom 8 ft (2438 mm)
Two side brooms 10 ft (3048 mm)

HOPPER CAPACITY
Volumetric Capacity: 3.5 cu yds (2.7 cu m)

HOPPER DUMPING
Maximum dump height: 9 ft 6 in (2895 mm)

TRAVEL SPEED
20 mph (32 Km/h)

WATER SPRAY SYSTEM
Tank capacity: 220 gal. (833 L)

ENGINE (make and type)
John Deere 4045T
Horsepower 74 hp (55 kW) @ 2,400 RPM
Tier 4 interim low emission diesel
*Tier 3 model dependant

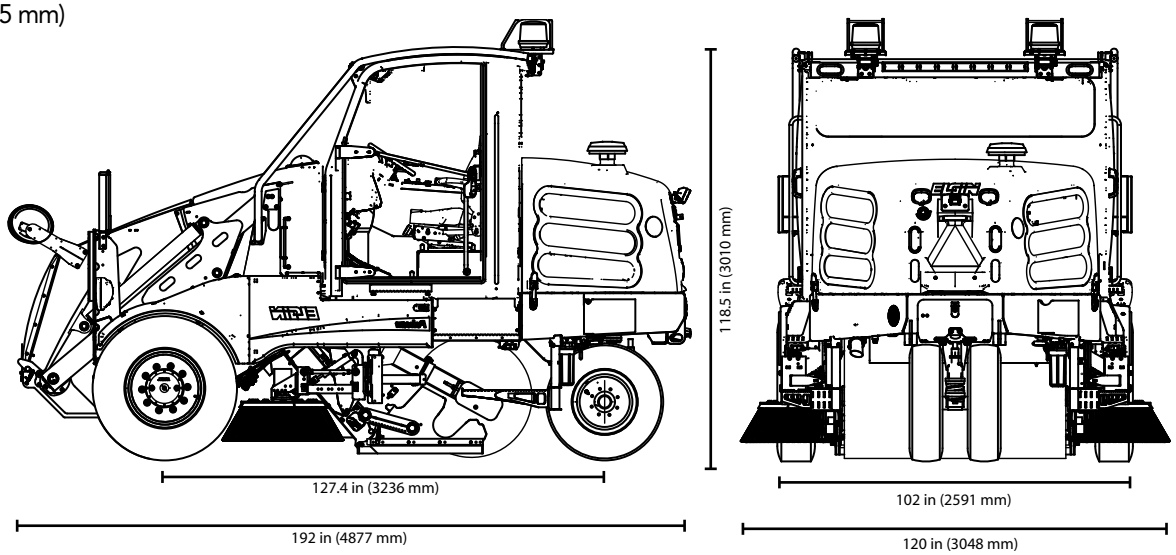

ELGIN SWEEPER IS YOUR PARTNER...

IN THE PLANNING

Instead of one-size-fits-all solutions, we'll work with you to select the sweeping technology that fits your specific needs.

IN THE STREETS

We're here to help you maintain your Elgin and train your operators to ensure the job is done right.

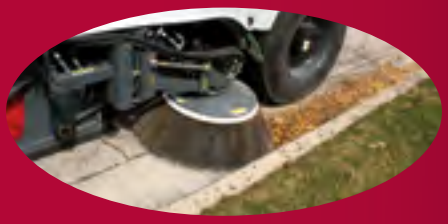

INTO THE FUTURE

Our dealers don't just sell you an Elgin; they're available to answer your questions and provide service for the life of the machine.

WARRANTY

Elgin Sweeper Company backs the Pelican sweeper with a one-year limited warranty. The Pelican is warranted against defects in material or workmanship for a period of 12 months from the date of delivery to the original purchaser. Optional extended warranty packages are available. Consult your Elgin dealer for complete warranty information. The ESCO/FSM warranty shall not apply to major components or trade accessories such as, but not limited to, trucks, engines, hydraulic pumps and motors, tires, and batteries that have a separate warranty by the original manufacturer.

Your Local Elgin Dealer Is:

Built for clean. Backed for life.

elginsweeper.com

1300 W. Bartlett Road • Elgin, IL 60120 U.S.A.
(847) 741-5370 Phone • (847) 742-3035 Fax

Specifications subject to change without notice.
Some photos shown with optional equipment.
Elgin®, Pelican®, and LifeLiner® are registered trademarks of Elgin Sweeper Company.
Covered under US Patent #7,281, 296 B2 & 6,584,157 B2, and Canadian Patent #CA2475362
Effective 4/14 P/N 0705031-F
Printed in U.S.A. ©2014 Elgin Sweeper Company

ELGIN®

ROAD WIZARD®

Specially built for the most demanding jobs, yet cleverly designed to be the least demanding to operate.

The Elgin® Road Wizard®, first introduced as part of the Elgin family of sweepers in 2003 has been redesigned and improved, retaining all of the features that made it popular. These features include a simplified, dual-engine design while incorporating what our engineers have learned from a 96 year history in sweeping – and that is the best of both worlds; increased operator efficiency and productivity, along with the latest technology for superior results.

Mounted on a selection of commercial cab-over or conventional chassis equipped with a 230 hp (173kw) engine and a five speed overdrive automatic transmission, the Road Wizard reaches a top speed of 65 mph (105 kph)on the highway. The sweep system is powered by a low emission, Tier 4i 74 hp Cummins 3.3 diesel engine, (55 kW @ 2600 RPM) one of the largest standard auxiliary engines available on a mechanical sweeper.

The control console, located between the operator stations, provides quick, easy access. All sweep function switches have tactile-feel surfaces, so operators can work the panel while keeping their eyes forward, for added safety and efficiency.

With dual free-floating gutter brooms that adjust to variable road surface, a sweep path of 10 feet (305 cm) and a powerful free floating direct drive main broom, you are ensured reliable and complete pickup. Superior dust control is maintained with an in-cab controlled, centrifugal water pump system and a 360 gallon (1363 l) water tank.

The Road Wizard's large 5.4 cubic yard (4.1 cu meters) hopper features a double-scissors lifting mechanism that is center mounted for greater stability, rigidity and trouble free operation. Plus, its dumping height is adjustable up to 10 feet (305 cm).

If you haven't tried sweeping with the Road Wizard – now is the time to take another look. You will be pleasantly surprised.

ELGIN
Road Wizard

Side Brooms
Large, 46 inch (1168 mm) trailing arm, free-floating side brooms offer four way motion and side-ways protection against hitting obstacles, to help protect from damage. Hydraulic lift and extension control enhances performance while sweeping within a 10 foot (305 cm) wide path. Steel plate disc construction adds durability. Broom speed is controlled by the hydraulic motor operating at variable speeds that coincide with auxiliary engine RPM. Automatic settings control down pressure, digging pressure and wear control. In-cab side broom pressure gauges and down pressure control are standard. Down pressure controls in the engine compartment are an option.

Main Broom
The main broom is attached to a fully floating trailing arm to better conform to road contours. Powered by the auxiliary engine, it works at variable speeds, depending on the engine RPM. Productivity is enhanced with automatic settings for down pressure, and wear control. Lift and lower functions are controlled from the cab, as are main broom down-pressure controls. Outside the cab down pressure controls are available as an option. Main broom arm bearings are sealed, can be re-lubricated and are self-aligning for self-adjustment when experiencing an uneven load which decreases wear and increases main broom life.

Hopper
The Road Wizard features a variable-height, right side dump hopper with a capacity of 5.4 cubic yards (4.1 cubic meters) volumetric. All hopper lift and dump controls are hydraulic and easily operated from inside the cab. A 48 degree dump angle allows material to easily slide out.

Hopper Lift System
The Road Wizard features a variable-height, unitized, twin-cylinder, double scissors lift that can unload material at a minimum of 30 inches (762 mm) and a maximum of 10 feet (305 cm). Lift capacity is 12,000 lbs (5448 kg) per load. A full hopper can dump and retract in as few as 20 sec at short intervals and up to 70 sec at top height.

Conveyor
A steel roller chain drives an 11-flight, squeegee-type conveyor to load debris into the hopper. The chain operates on polyurethane sprockets, which last longer. Conveyor speed is proportional to engine throttle which allows the squeegee loading rate to adjust to sweeping conditions. Conveyor operating height can be raised from the cab up to three inches to avoid larger debris and other obstacles. Conveyor bearings are sealed and self-aligning for longer life

Hydraulic System
The Road Wizard features a 34 gallon (129 l) reservoir with an external level indicator and thermometer, and a 24 GPM (91 L) quad gear pump capacity at 1200 RPM of the auxiliary engine.

Auxiliary Engine
A 74 hp Cummins 3.3, low emission Tier 4i diesel engine (56 kW @ 2600 RPM) provides variable control over sweeper speeds with no effect on truck speed. It is the largest standard auxiliary engine available on a mechanical sweeper. (Max fuel capacity is 50 gallons (189 l)). The engine includes a two-stage, dry-type air cleaner with safety element, pre-cleaner, and in-cab restriction indicator (option). In-cab gauges and warning lights are displayed for all engine functions including tachometer, hour meter, volt meter, fuel level, coolant temperature, oil pressure, hydraulic oil filter, engine running, and air filter restriction.

Water Tank
With a total capacity of 360 gallons, the removable water tank is made of corrosion resistant polyethylene. A 16 foot, 8 inch long (5.1 m) fill hose, and water level indicator lights located on the control console are standard.

Water Pump System
Water flow for the side and main brooms is controlled in-cab. The self-priming centrifugal pump (run dry type, 40 psi) provides effective dust control. Three spray nozzles are positioned on each side broom and three on the main broom.

Controls
The control console is located between the left and right operator stations. All sweep, dump, spray water and hopper operations are controlled from this single panel. 'One-button' automatic return to sweep improves operator efficiency. Tactile controls allow the operator to work by feel for added safety with the ability to control switches without taking his eyes off the road.

Cab
The Road Wizard offers a flexible range of chassis choices including cabover or conventional chassis. The standard chassis cab is right hand drive only or dualized with OEM parts and includes full factory controls, steering, and OEM gauge package that is identical for both left and right operator stations. All available chassis options meet FMVSS standards.

Options

LifeLiner® Hopper System

The LifeLiner® hopper system is a specially designed hopper liner and finish system that greatly improves the life, durability, and functionality of a sweeper hopper.

Cab-Over UD Chassis

UD 3300 chassis are built exclusively for Elgin and sweeping, and provide outstanding visibility, comfort, safety, and productivity. The short wheel base and unique steering geometry allow maximum maneuverability. A choice of Freightliner or International conventional chassis are also available.

In-Cab Side Broom Tilt

Allows operator to sweep effectively in variably-pitched gutters. On-the-go pitch adjustment with a simple variable rocker switch ensures proper broom angle.

Additional Options

- Outside, side broom down pressure control
- Outside, main broom down pressure control
- In-cab, side broom speed control
- Strobe lamp
- Arrow stick
- Automatic lubrication system
- Fire extinguisher
- Front spray bar

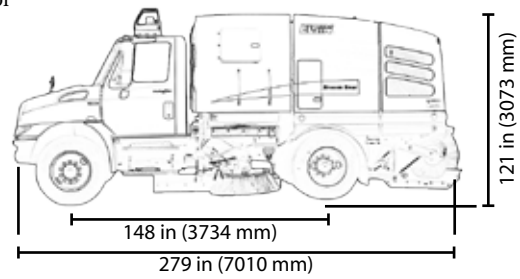

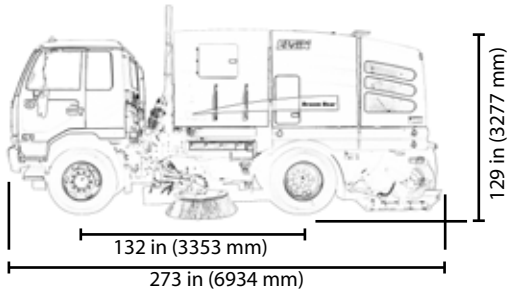

Value Added Services

Elgin's commitment to the customer continues long after the sale.

- Factory-trained worldwide dealer network
- Genuine Performance Matched Parts
- Elgin Training Center
- Highest resale value in the industry

Warranty

Elgin Sweeper Company backs the Road Wizard sweeper with a one-year limited warranty. The Road Wizard is warranted against defects in material or workmanship for a period of 12 months from the date of delivery to the original purchaser. Optional extended warranty packages are available. Consult your Elgin dealer for complete warranty information.

Your Local Elgin Dealer is:

Elgin Sweeper Company
Subsidiary of Federal Signal Corporation
1300 W. Bartlett Road
Elgin, Illinois, U.S.A. 60120-7529
(847) 741-5370 Phone
(847) 742-3035 Fax
www.elginsweeper.com

ISO-9001 Advantages

The Road Wizard is manufactured in an ISO-9001 facility.

Specifications subject to change without notice. Some items shown may be optional. Elgin® and Road Wizard® are registered trademarks of Elgin Sweeper Company. Effective 4/10 P/N 0705323-B Printed in U.S.A. ©Elgin Sweeper Company, 2010

ELGIN Pelican®

With Waterless Dust Control

The legendary Pelican® three-wheel broom street sweeper is now available with waterless dust control.

The Pelican with dry dust control maintains all the popular features and sweeping performance that have made the Pelican the best selling three-wheel sweeper - without the use of water for dust suppression. This means increased pick-up of fine particles over traditional, wet dust control sweepers, proven reliable year-round sweeping and considerable water conservation. The Pelican's standard features include:

- **Outstanding maneuverability:** for quick turns and sweeping close to obstacles.
- **No jam debris conveyor:** to move large debris without jamming.
- **Variable height front dump hopper:** for single-lane dumping from ground level up to 9' 6".
- **Durable, purpose-build chassis:** provides reliable, low-maintenance operation and stable sweeping and dumping.
- **Efficient comfortable cab:** isolation mounted cab for a cleaner, quieter, more comfortable operating environment - large windows, wide see-through doors and a full-width windshield for 360 degree visibility.

Dry Dust Control System: The Pelican with dry dust control features a patented dust control system that includes a dust skirting system, dust separator in the hopper, and a dust control fan with a maintenance-free filter – working together to control fugitive dust without the use of spray water.

The Pelican's waterless dust control system means operators sweep more and spend less time filling tanks enhancing productivity. Without water, mud doesn't build up on components, which can reduce clean-up time at the end of the shift. And since there is no water, sweeping in freezing weather conditions is possible, helping you meet the growing demand for quick pick up of winter-time road sand, salt and cinders.

Perhaps the most important benefits are those for the environment as the process of dry sweeping lowers your water footprint, as well as reduces road silt that can be left as a film from water-based dust control sweepers.

For more information or to schedule a demonstration, contact your local Elgin dealer or visit www.elginsweeper.com to locate a dealer near you.

Sweep System–Power

Engine
Make John Deere 4045TF150
Type 4 cylinder diesel
Displacement 276 cu. in. (4.5 L)
Bore 4.19 in (106.43 mm)
Stroke 5.0 in (127 mm)
Compression ratio 17:1
Horsepower 99 HP (74 kw) @ 2,500 RPM
Torque 274 ft-lbs (372 Nm) @ 1,400 RPM
Fuel tank capacity 35 gal (132.5 L)

Standard Accessories
Full flow oil filter, mechanical governor, dual safety element dry-type air cleaner with in-cab restriction indicator, fuel filter, counterbalanced, wet sleeve

Instrumentation
Panel Full vision, illuminated
Gauges Speedometer/odometer, tachometer, engine hour meter, engine temperature, oil pressure, voltmeter, fuel, hydraulic oil temperature and water fill

Electrical System

Hot stamped and color coded wiring, alternator/regulator-unitized, 120 ampere
Battery - 12 volt, group 31, 925 CCA, 180 min. reserve.
Lights - halogen sealed multiple beam headlights, combination stop and tail lights, adjustable side broom lights, directional signals with hazard switch. Safety horn, electronic back up alarm, sweep flashers.

Sweep System–Components

General Specifications
Wheel Base 127.4 in (3236 mm)
Overall Length 16 ft 0 in (4877 mm)
Height with cab 9 ft 10.5 in (3010 mm)
Width outside tires 8 ft 6 in (2591 mm)
Curb to curb turning radius 15 ft (4572 mm)
Sweeping path:
- **One side broom** 8 ft (2438 mm)
- **Two side brooms** 10 ft (3048 mm)

Weight:
- **One side broom** 13,590 lbs (6170 kg)
- **Two side brooms** 14,290 lbs (6482 kg)

Travel speed Up to 20 mph (32 Km/h)
Hydrostatic drive Single foot pedal for forward/reverse
Hydraulic service brakes
Tires:
- **Front** 11R22.5 14ply (2)
- **Rear** 10R17.5 16 ply (2)

Wheels:
- **Front** Steel disk type
- **Rear** Dual steel disk type mounted on alloy steel axle Sprung guide wheel

Cab
Type ISO mounted
Structural steel tube frame
Sealed with 100% filtered air intake. Sound insulated
Doors See-thru with sliding upper windows
- **Opening** From rear
- **Dust protection** Rubber gasket sealed

Windows Safety glass with tinted windshield and tinted sun visors, 360° visibility
Tinted upper glass
Dome light
Heater pressurizer with defroster Multi-vent air dispursement
Windshield wipers 2 speed intermittent, with washers, stalk actuation
Mirrors Inside (1); outside, dual west coast with convex inserts and (2) 10 in. oval
Seat(s) 21" wide deluxe foam cushion with belt(s)
Steering Tilt and telescoping steering column

Main Broom
Diameter 35 in (889 mm)
Length 66 in (1676 mm)
Type Prefab. disposable, polypropylene double wrapped at both ends
Core Steel reversible
Digging pressure & wear control in cab Hydraulic float
Lift control In cab hydraulic raise and lower
Drive Hydraulic motor
Mounting Hydraulic cylinder suspended
Speed Variable with engine RPM

Gutter Broom
Type Vertical digger
Diameter 36 in (914 mm)
Disc construction Steel plate
Speed Variable with engine RPM
Flexibility In-cab positioning hydraulic float
Drive Hydraulic motor
Mounting Free floating
Adjustment In/out (recoil spring), up/down
Digging pressure/wear control Hydraulic, in cab, pressure sensing
Broom material Oil tempered steel wire

Conveyor
Type Chevron cleat reinforced rubber belt
Speed Variable with engine RPM
Flexibility 9 in. (229 mm) oscillation for large object passage
Drive Hydraulic motor, chain and sprocket drive
Bearings Sealed self-aligning, re-lube

Debris Hopper
Capacity volumetric 3.6 yd^3 (2.8 m^3)
Material volume 3.5 yd^3 (2.6 m^3)
Hopper lift and dump control Electro-hydraulic in-cab
Maximum dump height Up to 9 ft 6 in (2895 mm)
Time to tilt hopper 17 seconds
Time to retract to working position 21 sec
Design lift capacity 9,000 lbs (4,080 kg)
Frontal dumping Standard

Hydraulic System
Hydrostatic Drive Electronically controlled
Variable displacement pump
Variable displacement motor
Fittings 'O' ring face seal type
Reservoir capacity 33 gal (106 L)
Reservoir level Externally readable
Inlet strainer 100 mesh
Filter Return 10 micron absolute, full flow
Filter restriction indicator In cab
Breather/Fill Cap 10 micron

Brake System
Service
- Multi-Caliper disc type
- Hydraulically applied
- Power assisted

Park
- Wet Disc multi pack with spring applied hydraulically released push/pull activation
- Interlock to prevent drive through if applied

Dry Dust Control System
Centrifugal dust evacuation fan. Large envelope filter with hydraulic shaker for dust removal.
Dust control skirts on side and main brooms.

Warranty

Sweeper
Elgin Sweeper Co. backs the pelican with a one-year limited warranty. The Pelican is warranted against defects in material or workmanship for a period of 12 months from the date of delivery to the original purchaser. Consult your Elgin Dealer for complete warranty details.

Engine
Consult factory

Available Enhancements

- **Waterless Dust Control**
- **Dual controls** - right and left side brooms, seats, and operator controls for operation from either side for sweeping in direction of traffic
- Remote adjustment heated mirrors
- Side broom tilt
- **Automatic lubrication system**
- **Lifeliner® hopper liner**
- **Air conditioner in-cab**
- **Beacon light with protector**
- **Strobe light with protector**
- **Electric side broom tilt indicator**
- **Broom hours and mileage recorder**
- **Diesel cold weather start aid**
- **Limb guards**
- **Extended warranty**
- **Sliding rear window**
- **Litter hose**

Finish

Powder Coat:
Undercarriage in standard Elgin gray
Body in choice of 186 colors
Consult factory for color chart

Chassis

Chassis is fully welded; formed channel and boxed tube style with jack points

Your Elgin Dealer is:

Printed in U.S.A. ©2009 Federal Signal Corporation
Federal Signal Corporation is listed on the NYSE by the symbol FSS

ELGIN
Subsidiary of Federal Signal Corporation

Elgin Sweeper Company
1300 W. Bartlett Rd.
Elgin, Illinois, U.S.A. 60120-7529
847-741-5370 Phone
847-742-3035 Fax
www.elginsweeper.com

Effective 4/09 P/N: 0705334-C
Specifications subject to change without notice

ELGIN®

Subsidiary of Federal Signal Corporation

Whirlwind®

ELGIN

Built for clean. Backed for life.

WHIRLWIND® - POWERFUL, DURABLE VACUUM SWEEPER

Need a powerful vacuum sweeper that not only cleans but is durable, easy to operate and easy to maintain? The Elgin® Whirlwind is the answer. Suited for municipalities, contractors and general maintenance sweeping, the Whirlwind has evolved over four decades to bring out the best in vacuum street sweeping. The high performance sweep system, user-friendly controls, customizable suction nozzle and side broom configurations, and selection of cab-over or conventional chassis make the Whirlwind the obvious choice. Thanks to our worldwide factory-trained dealer network, you can be sure of satisfaction on delivery and far down the road.

APPLICATION SOLUTIONS

Elgin Sweeper doesn't offer just one sweeping technology — we take an application-based approach to solving our customers' sweeping needs. Our team works with each customer to ensure that you get a machine that fits your specifications, with the right truck, engine configuration, fuel requirements, and options.

POWERFUL SUPPORT

Elgin sweepers are built for clean, backed for life. Throughout the life of the sweeper, we offer training to your team on proper use and maintenance. We have a world-wide network of experienced dealers with factory trained technicians and a local stock of OEM parts and accessories, to ensure total customer peace of mind.

UNMATCHED QUALITY

The Whirlwind was introduced nearly 40 years ago and has been continuously improved. Manufactured in an ISO:9001 certified plant, Elgin Sweepers are quality inspected and functionally tested prior to shipment. Paint prior to assembly ensures uniform, durable coverage. Whirlwinds are proudly assembled in the U.S.A.

POWERFUL CLEANING SYSTEM

How well a street sweeper picks up material is determined by its overall design. The air conveyance, sweeping and dust suppression systems, as well as ease of sweeper maintenance must all work together to achieve maximum sweeping performance.

HIGHLY EFFICIENT AIR CONVEYANCE SYSTEM

Efficient air flow, including a superior vacuum source and air routing path, is at the heart of the Whirlwind.

- High volume air flow at high velocity results in exceptional one-pass pickup while eliminating plugging that can occur in similar type sweepers.
- A nine-vane closed face turbine fan is powered by a turbo-charged diesel auxiliary engine for maximum airflow.

HIGH PRODUCTIVITY SWEEP SYSTEM

The Whirlwind's versatile sweep path picks up debris close to the curb and across the widest expanse of road in its class.

- The sweep system includes one or two suction nozzles, trailing arm side brooms, and a centrally-mounted extension broom.
- You can choose 28 in (711 mm) or 36 in (914 mm) diameter trailing arm side brooms that can be operated individually or simultaneously for a sweep path of up to 144 in (3658 mm)*.
- Choose between single or dual 32 in (813 cm) welded-steel suction nozzles that can be operated individually or simultaneously.
- The 11 in (280 mm) diameter suction hose accepts large debris. Quick disconnect allows an operator to inspect and clean the hose intake without raising the hopper.

SUPERIOR DUST SUPPRESSION

- Proper use of water is essential for dust suppression, sweeping performance, and longevity of sweeper components.
- Two heavy-duty water pumps – one for the right-hand suction nozzle, side broom, and extension broom, and one for the left-hand suction nozzle and side broom – are capable of run-dry operation.
- Two durable polyethylene water tanks provide 335 gal (1268 L) of water to up to 24* high quality, agricultural grade water nozzles in easy-to-access locations.
- High/low selectable pump speeds allow for application-dependent dust suppression.

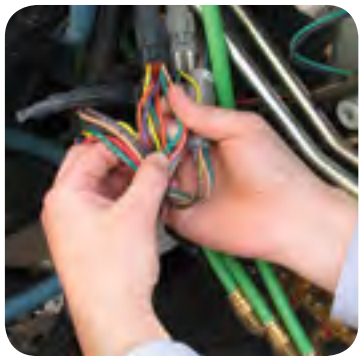

SIMPLE, EASY-TO-ACCESS MAINTENANCE

- Large access doors allow for quick and easy inspection without tilting the hopper. The engine oil and pneumatic pressure can be checked, hydraulic filter changed, and the fan bearings greased.
- The hydraulic system with o-ring face seal fittings is designed for long life and leak-free operation.
- Heavy-duty, waterproof electrical connectors and color-coded wires have stamped identification for quick location during troubleshooting.

*With 36 in side brooms

THE ELGIN WHIRLWIND

HIGH PRODUCTIVITY SUCTION NOZZLE(S)

A single or dual 32 in (813 mm) abrasion-resistant suction nozzles are available. Each nozzle covers 174 in^2 (1123 cm^2) and extends 15 in (381 mm) beyond the tire's track for increased performance closer to the curb. The 11 in (279 mm) diameter suction hose accepts large debris. The suction nozzle rides on two heavy-duty pivoting caster wheels allowing it to track, staying in the path of the debris and following road contours. The suction nozzles are equipped with a front-mounted shutter that allows easy entry of larger/bulky objects and large quantities of leaves.

HIGH-PERFORMANCE SWEEPER ENGINE

Power to the sweep system is provided by a reliable, powerful, and fuel efficient John Deere® 4045T diesel engine rated at 115 HP (86kW) @ 2400 RPM. Standard equipment includes auto-shutdown.

POWERFUL BLOWER

The high velocity, 9-vane blower generates the necessary airflow to convey the debris from the suction nozzle into the hopper and vacuum needed to overcome any restrictions such as rocks or bulky debris. More power means one-pass pickup, increasing operator productivity. The vanes are constructed of Hardox® brand steel for durability and maximum service life.

HIGH CAPACITY/EFFICIENT LOADING

The 8 yd^3 (6 m^3) capacity hopper provides extended sweeping time. Abrasion-resistant steel inlet deflector(s) direct debris flow to the center of the hopper for even, efficient material loading and maximum capacity utilization.

COMPACT DESIGN

The sweeper mounts on dual-steer conventional or cab-over chassis with short wheelbases, enabling a tight turn radius for better reach in cul-de-sac sweeping and greater maneuverability around corners. The standard auto-pickup in reverse allows for quick change of sweeping locations.

UNIQUE TRAILING ARM SIDE BROOMS

Choose between 28 in (711 mm) or 36 in (914 mm) diameter trailing arm side broom(s) that can be operated individually or simultaneously for a 144 in (3658 mm) sweep path. The trailing arm design provides special 4-way action to closely follow road contours, provide inward safety for obstacles, and maintain a consistent broom angle even as the broom starts to wear. Digging pressure is adjustable in-cab.

EASY-TO-ACCESS SERVICE DOORS

The auxiliary engine, water system, hydraulic system and pneumatic system components can be easily accessed behind two full-service doors, without tilting the hopper.

EFFECTIVE WINDROW EXTENSION BROOM

The 54 in (1372 mm) hydraulically-driven extension broom operates at an 18 degree windrow angle, directing the debris into the path of the nozzle. The broom can pivot for left or right side sweeping and is pivoted by a heavy duty pneumatic cylinder.

SUPERIOR VACUUM SWEEPER DESIGN

COMPREHENSIVE WATER SYSTEM

Up to 20 spray nozzles are located at the side brooms and inside the suction nozzles. The extension broom has 4 rubber mounted, quick-disconnect spray nozzles for easy cleaning and maintenance. The spray system is powered by two water pumps, one for each side of the sweeper. The pumps are controlled in-cab, with high/low settings to adjust for sweeping conditions. Two durable polyethylene water tanks provide 335 gal (1268 L) of water. Additional water options available.

ERGONOMIC CONTROLS

All sweep and water functions use rocker switches located on a centrally-mounted console for easy operation from either operator position. Air regulators provide positive side broom down-pressure and separate switches control the in/out and up/down function. Easy-to-read gauges provide quick assessment of all sweep and engine systems. A standard back-up camera and alarm enhance operator and sweeper safety.

QUICK COMPLETE DUMPING

The 8 cubic yard (6 cubic meter) hopper is constructed of 10 gauge steel walls, a ¼ inch (6.35 mm) thick steel floor with easy drop-down screens for quick cleanup. A 50 degree tilt angle ensures efficient dumping. Hopper controls are safely accessible on the curb side of the sweeper and conveniently located in-cab for quick unloading of the hopper.

MEMORY SWEEP

Elgin's Memory Sweep™ system allows the operator to resume all previous sweep settings, even broom tilt (if so equipped), with one-touch control to enhance productivity and reduce fatigue. It incorporates a multi-screen display that indicates system diagnostics, engine hours, water level, and optional features such as broom tilt angle and broom hours.

APPLICATION-SPECIFIC CONFIGURATIONS

PERMEABLE PAVEMENT CLEANING & RESTORATION

Installation of permeable pavement has doubled over the last three years as a best management practice (BMP) to deal with storm water runoff. These surfaces effectively reduce the amount of untreated water and accompanying pollutants directed into waterways. Both regenerative air sweepers and high-power pure vacuum sweepers can be used as part of a practical maintenance program for permeable pavement. However, for restoration when the surface is blocked and water is no longer able to infiltrate the ground, pure vacuum sweepers, such as the Whirlwind, work better due to highly concentrated vacuum levels which exceed that of a regenerative air sweeper. The Whirlwind's incredible vacuum is able to pull out embedded debris that plugs drainage paths. Most permeable pavement periodically requires this degree of vacuum to restore infiltration of clogged areas.

CATCH BASIN CLEANING

Catch basins allow surface water runoff to enter the storm water conveyance system, while trapping solids and sediments that might otherwise end up polluting the receiving waters. Catch basin cleaning is an efficient and cost-effective method for preventing flooding as well as removing the sediment and pollutants before they can get into the waterways. A regular schedule of catch basin cleaning improves both aesthetics and local water quality.

A Whirlwind equipped with a heavy duty wandering hose becomes a versatile machine capable of street sweeping and catch basin cleaning.

- Multiple aluminum hose extensions can be added to the 4 ft long (1.2 m) catch basin nozzle for deep and thorough cleaning.
- Fingertip hydraulic controls on the handles easily adjust the height of the nozzle.
- The rear auxiliary engine throttle control improves operator productivity and adjustment of vacuum power.

The combination Elgin Whirlwind sweeper with wandering hose option provides a cost-effective tool to facilitate storm water management.

OPTIONAL ENHANCEMENTS

WANDERING HOSE

The versatile, hydraulic-assist hose gets into hard-to-reach places and is effective in catch basin cleaning. It handles multiple tubes for especially deep catch basin cleaning.

LIFELINER® HOPPER SYSTEM

The LifeLiner® hopper liner and finish system greatly improves the life, durability, and dumping functionality of a sweeper hopper. It is backed by a lifetime warranty.**

STAINLESS STEEL HOPPER SYSTEM

This complete hopper body is constructed entirely of 304 grade stainless steel to provide maximum service life, even in the most corrosive applications.

ADDITIONAL OPTIONS:

- Variable broom speed
- Auto nozzle shutter
- Front spray bar
- Hopper inspection doors
- Rear flood light(s)
- Rotating beacon/strobe light
- Automatic lubrication system
- Hopper deluge
- Auxiliary hydraulic system
- Additional water: 140 gal (530 L), 280 gal (1060 L), 360 gal (1363 L)
- High/low pressure washdown
- In-cab side broom tilt
- Utility cover lifter
- PM-10 compliant
- 10 yd^3 (7.6 m^3) hopper

SPECIFICATIONS:

SWEEP SYSTEM
High performance vacuum sweeper

SWEEP PATH*
One suction nozzle, one side broom, and extension broom: 95 in (2413 mm)
Dual suction nozzles, two side brooms and extension broom: 144 in (3658 mm)

NOZZLE
Single 32 in (813 mm) abrasion-resistant suction nozzle (dual nozzles available)
Pick-up area: 174 in^2 (1123 cm^2)
Extension beyond tire track: 15 in (381 mm)

AUXILIARY ENGINE
John Deere 4045T
115 HP

CHASSIS
Choice of conventional or cab-over chassis

TRAVEL SPEED
Highway speeds

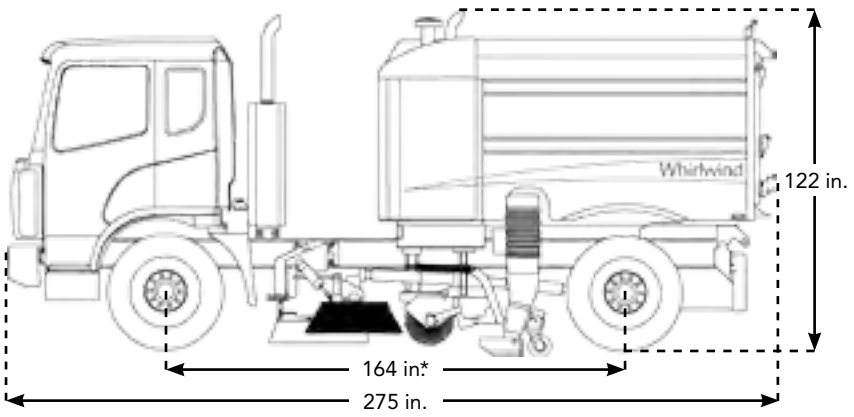

*With 36 (914 mm) in side brooms. **Consult factory for warranty details

ELGIN SWEEPER IS YOUR PARTNER...

IN THE PLANNING

Instead of one-size-fits-all solutions, we'll work with you to select the sweeping technology that fits your specific needs.

IN THE STREETS

We're here to help you maintain your Elgin and train your operators to ensure the job is done right.

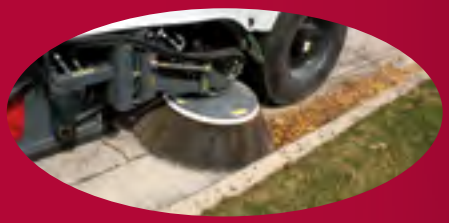

INTO THE FUTURE

Our dealers don't just sell you an Elgin; they're available to answer your questions and provide service for the life of the machine.

WARRANTY

Elgin Sweeper Company backs the Whirlwind sweeper with a one-year limited warranty. The Whirlwind is warranted against defects in material or workmanship for a period of 12 months from the date of delivery to the original purchaser. Optional extended warranty packages are available. Consult your Elgin dealer for complete warranty details.

Your Local Elgin Dealer Is:

ELGIN

Built for clean. Backed for life.

elginsweeper.com

1300 W. Bartlett Road • Elgin, IL 60120 U.S.A.
(847) 741-5370 Phone • (847) 742-3035 Fax

Specifications subject to change without notice. Some items shown may be optional. Elgin® Whirlwind® and Memory Sweep™ are registered trademarks of Federal Signal Corporation. Hardox® is a registered trademark of Hardox wear plate. Federal Signal Corporation is listed on the NYSE by the symbol FSS.
©2013 Elgin Sweeper Company. Effective 7/13 P/N 0705312-E

Spaulding Mfg., Inc.

5366 East Road Saginaw, MI 48601 Phone: 989-777-4550 Fax: 989-777-7430

Crack Sealer Technical Datasheet

Technical Data

- 125 and 225 Gallon Kettle
- 125,000 Minimum BTU Diesel or Propane Fuel Source
- Automatic Temperature Control
- Material / Oil / Hose All Seperate Digital Control Temperature
- On Demand Pumping System
- 12 Volt Battery
- 110 Volt Heated Hose
- Diesel Motor Powered Hydraulics
- Full 360 Degree Hydraulic Powered Floor Sweep Agitator
- Splash Proof Kettle Loading Door
- Tandem Axles
- Trailer Frame Steel - 5" Channel
- 8 Bolt Commercial Wheels
- Torsion Axles
- Kettle - Fully Insulated and Oil Jacketed
- Triple Wall Construction
- Kettle Floor 1/4" Steel
- Heated Rear Cabinet
- All Wiring External to Hopper
- Paint: Sandblasted with Two Coats of Epoxy Primer and Urethane Finish
- 125 Gallon 7,000 lbs. GVWR
- 225 Gallon 9,000 lbs. GVWR
- Length: Varies Upon Options Specified
- Width: 125 Gallon 85" 225 Gallon 90"
- Height:125 Gallon 83" 225 Gallon 87"
- NATM compliant
- Operating Controls Located on Curbside Wherever Possible
- Many Options Available

* 225 Gallon with Noise Reducing Engine Cover

5366 East Road Saginaw, MI 48601 Phone: 989-777-4550 Fax: 989-777-7430

Spaulding Mfg., Inc.

5366 East Road Saginaw, MI 48601 Phone: 989-777-4550 Fax: 989-777-7430

R.M.V. Hot Patcher Technical Datasheet

Technical Data

- 2, 3 & 4 Ton Capacity
- 105,000 Minimum BTU Diesel or Propane Fuel Source
- Automatic Temperature Control
- 12 Volt Battery
- 2 Ton - Single Axle Trailer with Electric Brakes and Safety Breakaway
- 3 & 4 Ton - Tandem Axle Trailer with Electric Brakes and Safety Breakaway
- 2, 3 & 4 Ton Trailer Frame Steel - Rectangular Tubing
- 8 Bolt Wheels
- Leaf Spring Axles
- Hopper - Fully Insulated
- Triple Wall Construction
- Hopper Floor 1/4" Steel
- Floor, Shovel Deck, and all Four Walls are Heated
- 10 Gauge Capping Channel and Corner Molding Add Structural Integrity to the Hopper Preventing it From Becoming Out of Square
- All Wiring External to Hopper
- Paint: Sandblasted with Two Coats of Epoxy Primer and Urethane Finish
- 2 Ton GVWR of 7,000 lbs.
- 3 & 4 Ton GVWR of 14,000 lbs.
- Length: 14' - 18'
- Width: 88"
- Height: Varies Based on Hopper Capacity.
- NATM compliant
- Operating Controls Located on Curbside Wherever Possible
- Many Options Available

* 2 Ton R.M.V Hot Patcher

* Shown with Dumping Hopper Option

*Shown With Reclaiming Option

5366 East Road Saginaw, MI 48601 Phone: 989-777-4550 Fax: 989-777-7430

Spaulding Mfg., Inc.

5366 East Road Saginaw, MI 48601 Phone: 989-777-4550 Fax: 989-777-7430

Roadsaver Technical Datasheet

Technical Data

- 2, 3 & 4 Ton Capacity
- 105,000 Minimum BTU Diesel or Propane Fuel Source
- Automatic Temperature Control
- 12 Volt Battery
- 2 Ton - Single Axle Trailer with Electric Brakes and Safety Breakaway
- 3 & 4 Ton - Tandem Axle Trailer with Electric Brakes and Safety Breakaway
- 2, 3 & 4 Ton Trailer Frame Steel - Rectangular Tubing
- 8 Bolt Wheels
- Leaf Spring Axles
- Hopper - Fully Insulated
- Triple Wall Construction
- Hopper Floor 1/4" Steel
- Floor, Shovel Deck, and all Four Walls are Heated
- 10 Gauge Capping Channel and Corner Molding Add Structural Integrity to the Hopper Preventing it From Becoming Out of Square
- All Wiring External to Hopper
- Paint: Sandblasted with Two Coats of Epoxy Primer and Urethane Finish
- 2 Ton GVWR of 7,000 lbs.
- 3 & 4 Ton GVWR of 14,000 lbs.
- Length: 14' - 18'
- Width: 88"
- Height: Varies Based on Hopper Capacity.
- NATM compliant
- Operating Controls Located on Curbside Wherever Possible
- Many Options Available

* Standard Non-Dump Roadsaver

* Shown with Dumping Hopper Option

5366 East Road Saginaw, MI 48601 Phone: 989-777-4550 Fax: 989-777-7430

All-LED Solar Powered

:: PCMS

:: FEATURES

- 8-character, 3-line message display
- 4 LEDs per pixel

:: BEST IN:

- Daylight
- Night
- Rain
- Fog
- Limited visibility
- Blowing snow
- Blowing sand

:: APPLICATIONS:

- Lane Merge
- Lane Closure
- Shoulder Closure
- Line Striping
- Street Sweeping
- Evacuation
- Public Safety
- Traffic Control
- Speed Reduction
- Temporary Hazard
- Special Events
- Work Zone ITS

Durable, reliable equipment yields better ROI

The All LED Solar (ALS) dynamic message sign has been completely redesigned to deliver improved performance and protection against the effects of harsh environments.

During every step of the engineering process we sought to maintain the exceptional value and low total cost of ownership that you've come to expect from ADDCO as an industry leader.

Improvements include:

- Vastly reduced power consumption decreases the number of solar panels and batteries required.
- Heavy-duty steel boxes equipped with a substantial weatherproof seal protects the batteries and control panel from rain, snow, dust and road grime.
- Streamlined control layout makes servicing the equipment quick and easy.

:: QUALITY:

ADDCO has earned ISO 9001:2000 registration. Achieving this level of recognition assures you that quality is at the heart of everything we do.

ADDCO
Smart Traffic Solutions™

SPECIFICATIONS

DISPLAY
> 35 pixels per character (5x7 matrix)
> 8 characters per line
> 3 lines
> 18” high characters
> High output LEDs
> Photocell controls brightness
> Automatic dimming 10-100%
> Legible from 1,200 feet

CONTROLLER
> Durable case
> Hand-held terminal
> Backlit touch pad
> Backlit LCD display
> Operate from “safe zone”
> Stores up to 299 messages

TRAILER
> Tubular steel with powder coat is 70% more durable than wet paint.
> Hitch: 6,000 lb.
> Axle: 3,500 lb. torsion
> Jacks: 2,000 lb. swivel

AVAILABLE OPTIONS
> Radar
> Cell phone
> Adjustable hitch
> A/C charger
> NTCIP compliance
> and many more

DIMENSIONS
> *Overall*
Height: 165” (raised)
Height: 108” (transport)
Width: 80”
Length: 193”
Gross Weight: 2,800 lbs.
Ground Clearance: 10.25”

> *Message panel*
Height: 76”
Width: 134”
Depth: 5”

SOLAR TILT AND ROTATE® (STAR) - EXCLUSIVE!
> Solar panels can be rotated 360° and tilted from 0 to 35°
> Maximizes efficiency
> Reduces maintenance

SECURE ENCLOSURES
> Easy access
> Lockable
> Heavy-duty steel construction
> Anti-slip treads

Specifications describe standard products. Variations exist to meet particular project requirements. Specifications are subject to change without notice.

STAR® is a registered trademark of ADDCO, Inc.

on the JOB

STAR® IMPROVES PCMS PERFORMANCE, SAVES TIME & MONEY

“...It simply makes sense to tilt and rotate the modules at an angle to increase energy production.”

Clay Aldrich
Director PV Division
Solar Energy Industries Association (SEIA)

Enhanced performance

“In general... energy performance will be enhanced on an annual basis by tilting the array...”

Hal Post
Project Manager
Sandia National Laboratories

More energy year-round

“For year-round loads, obviously you get more insolation (unit of sun light) and, therefore, more energy out of the array by tilting it toward the sun.”

Jim Dunlop
Senior Research Engineer,
PV Group
Florida Solar Energy Center

ADDCO
Smart Traffic Solutions™

240 Arlington Ave E St. Paul, MN 55117
651.488.8600 f: 651.558.3600
sales@addco.com www.addco.com

SPECIFICATIONS

DIMENSIONS

> Overall

Height: 20'4"
(fully raised to top of signal head)

Height: 9'-8"
(transport)

Height: 10'
(bottom of lower signal to road surface)

Distance: 10'
(between signal heads)

SPECIAL FEATURES

> Designed to tow in tandem

> Monitors and manages battery consumption

> Wireless programming

> Embedded conflict monitor

> Multi-level pre-emption

AVAILABLE OPTIONS

> Microwave, video, audio & optical sensors

> Back plates

> GPS, Remote Monitoring

> Flagger Remote Controller

> Pre-emption (Emergency Vehicle)

> Pilot Car Operation

Specifications describe standard products. Variations exist to meet particular project requirements. Specifications are subject to change without notice.

on the JOB

A WORK ZONE WORKHORSE

Dependability and ease of use are overwhelming strengths of the ADDCO/GALAXY Controller. It can be used in a work zone to:

- Regulate traffic when a single lane is used for two-way traffic
- Stop traffic to allow slow-moving, heavy equipment to enter or leave the work zone.
- Control 4-way (or more) intersections.
- Control Pilot car operations

Troubleshooting is an easy-to-follow process. The controller's full range of diagnostic functions allows for in-depth evaluation in even the most complex traffic plans.

The ADDCO Controller powered by Galaxy™ can help you get the most out of your equipment. You'll also save time and money… and reduce those dreaded middle of the night service calls.

Advancing Green Technology®

ADDCO with GALAXY™

Connecting Your Signal Universe®

(888) 447-7263
www.galaxysignals.com

PORTABLE
Traffic Signal

:: PTS

The Portable Traffic Signal (PTS) is used in work zones as a temporary traffic signal.

Our controller has been completely re-engineered to meet the need for a reliable, comprehensive and programmable temporary traffic system that increases "up time."

The result: The ADDCO PTS is powered by Galaxy™.

Our leading-edge controller is capable of handling an impressive range of applications. It can be programmed to perform basic or complex functions including support for up to 16-phase intersection control.

Tasks that used to take lots of time, money and expensive labor to perform now take just minutes. Using the ADDCO PTS will save you money by reducing:

- Set-up time
- Programming time
- Need for technical support services

Packing so much technology into a single unit gives you the power to drive multiple signals with a single controller. Because the system is wireless you skip the hassle and expense of using cables to connect trailers.

The Galaxy™ controller can be retrofitted to ANY existing traffic signal regardless of its manufacturer, allowing you to create interoperability within your fleet. Because it is wireless, signal operations can be controlled remotely or from a central location. Advanced functionality with an easy-to-use interface provides:

- Control of up to 16 traffic phases with 30 trailers
- Wireless set-up and programming
- Dynamic clearing time calculator
- Storage of preset traffic programs
- Flagger mode with remote control
- Remote diagnostics
- Support for all types of sensors
- 12VDC operation
- Redundant, fail-safe design
- Operates independent from infrastructure. Island Technology®

:: EXCLUSIVE:

- Wireless programming
- Controls up to 16 phases
- Works with ANY manufacturer's trailer
- Store 10 preset traffic programs

Easy to program:

- Dynamic clearing times
- Strobe on red
- Progressive flow synchronization capable

:: POWER:

Manages power consumption more proficiently than any other controller! The power draw of LED signal heads, sensors and radios can all be accommodated and monitored.

:: APPLICATIONS:

- Lane Closure
- Public Safety
- Temporary Traffic Control
- Special Events
- Work Zone ITS

:: QUALITY:

ADDCO has earned its quality reputation. This recognition assures that quality is at the heart of this advanced technology.

ADDCO with GALAXY™

Connecting Your Signal Universe®

ADDCO PTS 2000 is a division of John Thomas, Inc.

HEIL

THE WHEELS ARE ALWAYS TURNING

A DOVER COMPANY

Half/Pack®

High-Compaction Front Loader

Environmental Solutions Group

A DOVER COMPANY

Half/Pack®

The most popular Front Loader for over 30 years... for a reason.

The reason? The **Half/Pack** has consistently delivered proven performance in some of the most demanding environments imaginable, earning a loyal following of users who rely on its unmatched dependability and appreciate its lower total cost of ownership.

Heil continues to set the standard for front loaders with the evolution of innovative new features that enhance functionality. Our patented Shur-Lock™ tailgate locks, double-walled and lapped hopper sides, and an industry-leading interlaced ladder subfloor foundation mean that your **Half/Pack** is built for a long, reliable lifespan.

But Heil is not simply known for engineering and manufacturing outstanding equipment. We back all Heil units with a worldwide network of knowledgeable dealers and service centers, as well as the industry's first dedicated manufacturer-based training facility and mobile training centers, to help you keep your equipment operating at its peak. Add to that Heil's century-old heritage of commitment to customer satisfaction, and you can feel certain that, when you choose a **Half/Pack**, you are getting the most productive, durable, safe, and easy to maintain front loader available.

We encourage you to read on to learn more about the **Half/Pack's** extenisve features, and then to contact your Authorized Heil Dealer for assistance in choosing the Heil refuse collection vehicle that is right for you. To find the Dealer nearest you, visit ww .heil.com.

Single axle 20 yd³ configuration

Smarter By Design, with Loyalty Built In

The **Half/Pack**® was designed to withstand the rigors of daily use in punishing environments.

- **Solid Foundation** — The interlaced subframe provides exceptional strength and durability, which means your **Half/Pack** will enjoy a long lifespan and excellent resale value.
- **Less Time in the Shop** — When you're stuck in the shop, you're not making money. The **Half/Pack** features our Service Smart™ design, which simplifies routine maintenance and helps keep you away from the shop and out servicing your customers.
- **On-board Diagnostic Tools** — Quickly and easily diagnose problems away from outside hazards and weather. On-board diagnostic tools make troubleshooting a breeze.
- **Protected Packing Cylinders** — 35-gallon sumps control and store any liquid waste or refuse that spills over the packer blade to help protect the cylinders from packing in the trash and to minimize the chance for corrosion.
- **Easily Accessible Components** — Easy behind-the-cab access to critical components, such as hydraulic valves, reduces maintenance costs and downtime.
- **Superior Filtration** — Our 3-micron filtration system keeps oil cleaner and extends the life of hydraulic components. Other manufacturers use 10-micron filtration, which can allow particulate matter to damage the hydraulic system.
- **Proximity Switches That Last** — The proximity switches on a **Half/Pack** are engineered to provide years of service without the need for regular readjustment or replacement. Our proximity switches are the highest quality available, exceeding even military specifications
- **Optional Operate-in-Gear-at-Idle** — Customers and operators alike appreciate the **Half/Pack's** quiet operation. Plus, not having to constantly rev the engine means reduced wear on drive train components.
- **Single Axle Model** — The **Half/Pack** is available in a single axle configuration to improve maneuverability and reduce wear and tear inflicted by city streets

Dual Hopper Sump Doors

Standard dual hopper sump doors enable trash and liquids that might otherwise fall behind the packer blade to collect below the packer cylinders. This prevents cylinder obstruction and enables the operator to clean behind the packer without entering the body.

Clamp-on Arms

Built to last, our patented clamp-on arms are designed to pivot instead of break in the event of an accidental collision. If damage occurs, the clamp-on arms can be replaced in a fraction of the time required for welded or bolt-on arm styles.

Double-Walled Hopper

High tensile strength steel withstands the exceptional forces of the compaction cycle and ensures maximum payloads. Our exclusive double-wall hopper keeps refuse safely within the confines of the body and prevents corrosion for long-term durability.

Shur-Lock™ Tailgate Locks

Heil's in-cab operated tailgate locking system not only keeps payloads secure but also enables the operator to unlock and open the tailgate and discharge the payload from the safety of the cab. Reflective indicator tags, visible from the cab's mirrors, confirm when the tailgate is sealed.

Half/Pack®

High-Compaction Front Loader Product Specifications

Performance Specification		@ idle	@ 1,200 RPM
Container Dump Cycle Time	up	10-12 seconds	7-8 seconds
	complete	20-23 seconds	14-17 seconds
Packer Cycle Time Dump of Eject		20-23 seconds @ idle	
Arms Lifting Capacity		8,000 lbs. (tested to 16,000 lbs.)	
Compaction Force		117,000 lbs.	
Dump Body Hoist Angle		30º	

Available in Tilt-To-Dump* or Eject Models with Optional Service Hoist

*32 yd³ Body Only Available in Eject Model

Hydraulic Specification		
PUMP		
Type		Single Vane
Maximum Operating Pressure		2,500 psi
Working RPM		1,300 RPM approx.
Flow at Working RPM		50 GPM
OIL RESERVOIR		
Tank Capacity (net)	dump	32 gallons
	eject	41 gallons
Filters		3 micron return filter with in-cab filter monito 100 mesh reusable suction screen
VALVES		
Type		Multi-section stack valve, 50 GPM @ 2,500 psi relief valve to prevent overload damage

All designs, specifications, and components are subject to change at the manufacturer's sole discretion at any time without notice. Data published herein is for information purposes only and shall not be construed to warrant suitability of the unit for any particular purpose, as performance may vary with the conditions encountered. The only warranty is our standard written Warranty Statement for this product at the time of shipment.

Chassis Requirements		20 yd³		23 yd³	28 yd³	32 yd³
		Single axle w/ Tag	Tandem axle			
Usable CT	in.	160 in.	154-160 in.	148 to 160 in.	172 to 190 in.	184 to 190 in.
	mm					
Wheel Base	in.	185 in.	179-185 in.	179 to 185 in.	197 to 215 in.	209 to 215 in.
	mm					
GVWR	lbs.	54,000 lbs.	54,000 lbs.	60,000 lbs.	64,000 lbs.	66,000 lbs.
	kg					
Minimum GVWR (F)*	lbs.	20,000 lbs.	20,000 lbs.	20,000 lbs.	20,000 lbs.	20,000 lbs.
	kg					
Minimum GAWR (R)*	lbs.	30,000 lbs.	30,000 lbs.	40,000 lbs.	46,000 lbs.	48,000 lbs.
	kg					
Minimum Platform	in.	227	227	227	259	277
	mm					

*Typical recommended specifications. Specific specifications are dependent on chassis weight, wheelbase, and expected paylo
Chassis must comply with Heil's chassis layout requirements, or body will not be mounted.

Body Specification			20 yd³	23 yd³	28 yd³	32 yd³
Body Capacity			20 yd³	23 yd³	28 yd³	32 yd³
Hopper Capacity			12 yd³	12 yd³	12 yd³	12 yd³
Gross Capacity			32 yd³	35 yd³	40 yd³	44 yd³
Gross Weight (approx.)		lbs.	18,000 lbs.	18,100 lbs.	19,300 lbs.	20,000 lbs.
		kg				
Overall Length [a]		in.	364 in.	383 in.	415 in.	433 in.
		mm				
Overall Width		in.	96 in.	96 in.	96 in.	96 in.
		mm				
Overall Height [b]	Arms Down	in.	107 in.	107 in.	107 in.	107 in.
		mm				
	Arms Up	in.	120 in.	120 in.	120 in.	120 in.
		mm				
Hopper Opening		in.	83 in. x 93 in.	83 in. x 93 in.	83 in. x 93 in.	83 in. x 93 in.
		mm				

[a] Arms Down, Forks Tucked [b] Above Frame

Cylinder Specification				20 yd³	23 yd³	28 yd³	32 yd³
Body Cylinders	**Type**		**Bore**				
Packer (Eject Models)	(2) 3-Stage Double Acting Telescopic		in.	5.5 in.	5.5 in.	5.5 in.	5.5 in.
			mm				
ARM	(2) Double Acting		in.	4.5 in.	4.5 in.	4.5 in.	4.5 in.
			mm				
Hoist (Dump Models)	(2) Single Acting		in.	4.5 in.	4.5 in.	4.5 in.	N/A
			mm				
Forks	(2) Double Acting		in.	4.0 in.	4.0 in.	4.0 in.	4.0 in.
			mm				
Top door	(1) Double Acting		in.	2.8 in.	2.8 in.	2.8 in.	2.8 in.
			mm				
Tailgate	(2) Double Acting Each	Raise	in.	3.1 in.	3.1 in.	3.1 in.	3.1 in.
			mm				
		Lock	in.	3.0 in.	3.0 in.	3.0 in.	3.0 in.
			mm				

2030 Hamilton Place Blvd., Suite 200, Chattanooga, TN 37421
866.FOR.HEIL (866.367.4345) • Fax: 423.855.3478
www.heil.com

© 2011, Heil Environmental, Printed in the U.S.A.
FORM #SWS-000002-111511

HEIL

THE WHEELS ARE ALWAYS TURNING

A DOVER COMPANY

PT 1000™

High-Performance Rear Loader

Environmental Solutions Group

A DOVER COMPANY

PT 1000™

Affordable by design.

Heil's surprisingly affordable **PT 1000**™ will change your thinking about rear loader performance. We put more than 60 years of Heil rear loader know-how and experience into a refuse collection vehicle that delivers the fastest cycle time in its class, an outstanding payload, and a best-in-class hopper. It also fits comfortably into today s increasingly restricted budgets.

Beneath its sleek exterior, the **PT 1000** is a no-nonsense machine that will outperform anything else in its class. It offers a 15-second cycle time and a reload time of less than 6 seconds, with packing forces that take full advantage of Heil's experience in high-pressure hydraulics and lighter weight, high-tensile steel construction.

The **PT 1000** features a large 3-cubic yard hopper that is the best in its class, making it the ideal vehicle for those occasional commercial pick-ups. It can be equipped with a variety of container handling devices to suit just about any collection need. It also offers a payload density of up to 1,000 pounds per cubic yard, and a one-piece body sidewall that not only looks better, but also is easier to wash and maintain, resists rust and corrosion, and provides a smooth surface for signage.

The **PT 1000** is available in 18 and 20-yard single axle models — both bodies are FET exempt.

To add the proven **PT 1000** to your fleet, contact your local Authorized Heil Dealer. To find the Dealer nearest you, visit www.heil.com

Shown with optional equipment.

Proven Rear Loader Performance

With the fastest cycle time in its class, the proven **PT 1000**™ can maximize your time on daily collection routes.

- **Smooth Sides** — **PT 1000** has smooth sides that provides the customer with optimal signage space for advertising.
- **Service Smart**™ **Design** — Easy to access UHMW wear parts allows for longer component life while keeping the owners total cost of ownership in mind.
- **Large Side Door** — Large side door offers ease of access for maintenance personal to enter the body.
- **Superior Filtration** — Our 10-micron filtration system keeps hydraulic oil cleaner and extends the life of the hydraulic components. Other manufacturers use 10-micron filtration, which can allow particulate matter to damage the hydraulic system
- **One-hand Manual Controls** — One-hand manual controls allow for full control of the packing cycle, which allows the operator to stop, start, and reverse the upper panel or blade at any point in the packing cycle..

The PT 1000 is available with CNG.
Ask your Heil Dealer for details!

High-Capacity Hopper

When it comes to the Mid-Size rear loader the PT1000 offers a large 3.0 cubic yard hopper that is key to optimizing productivity and easily handles even the bulkiest of waste materials found in today's refuse collection.

Packing Power

Heil's unique track design allows for more compaction force per square inch utilizing the system pressure of 2750 psi to the maximum capacity also delivering faster cycle times to expedite the operator's route time.

Electrical Control Box

New Power Distribution electrical control box on the side of the body offers easier diagnostics of wiring issues and minimizes the need to cut into the chassis cab interior for wiring integration

Optimized Body Weight

A payload density of up to 1,000 pounds per cubic yard and a body sidewall constructed of single sheet, high-tensile steel deliver long-lasting performance without unnecessary weight. The 18- or 20-yard single-axle models are FET exempt and provide the lowest overall weight, the flexibility to get into and out of tight spaces, and an enhanced turning radius.

PT 1000™

High-Performance Rear Loader Product Specifications

Performance Specification	
Compaction	Up to 1,000 lbs. per yd³
Hopper Size	3.0 yd³
Packing Cycle Time	15-17 seconds
Reload Time	6-8 seconds
FET Exempt	13 yd³, 16 yd³, 18 yd³ & 20 yd³

All designs, specifications and components are subject to change at the manufacturer's sole discretion at any time without notice. Data published herein is for information purposes only and shall not be construed to warrant suitability of the unit for any particular purpose, as performance may vary with the conditions encountered. The only warranty is our standard written Warranty Statement for this product at the time of shipment.

Chassis Requirements		18 yd³	20 yd³	25 yd³
Minimum GVWR (1)		30,000	33,000	48,000
Minimum GAWR	front	9,000	10,000	14,000
	rear	21,000 (2)	23,000 (2)	34,000
Usable CA	in.	117-125	132-140	N/A
	mm	2972-3175	3353-3556	N/A
Usable CT	in.	N/A	114-120	147-153
	mm	N/A	2896-3048	3734-3886
Minimum Platform	in.	32	32/51	51
	mm	813	813/1295	1295

Any chassis sent to Heil Environmental with less than these minimum GVWR/GVARs will not be mounted.
(1) If CA/CT is not as recommended, contact Heil Environmental for applicable weight distribution and GVWR/GVAR requirements.
(2) Require 30,000 lbs. spring package.

Hydraulic Specification	
PUMP	
Type	High pressure gear
Maximum Operating Pressure	2,750 psi
GPM	48 GPM
OIL RESERVOIR	Chassis frame mounted
Tank Capacity (net)	24 gallons (90.8 liters)
Filters	10 micron return filter; 140 micron suction lin
VALVES	
Shutoff	Ball type
Packing Control	Spool type
Ejector and Tailgate Raise	Spool type

Body Specification		18 yd³	20 yd³	25 yd³
Body Capacity	yd³	18	20	25
	m³	13.76	15.29	19.11
Overall Length	in.	220	234	269
	mm	5588	5944	6833
Overall Length with Tailgate Raised	in.	272	286	321
	mm	6909	7264	8154
Overall Width	in.	96	96	96
	mm	2438	2438	2438
Overall Height Above Frame	in.	94	94	94
	mm	2388	2388	2388
Overall Height with Tailgate Raised	in.	162	162	162
	mm	4115	4115	4115
Gross Weight (approximate)	lbs.	11,100	11,400	12,300
	kg.	5,035	5,170	5,580

Tailgate Specification		18 yd³ & 20 yd³	25 yd³
Hopper Capacity	yd³	3	3
	m³	2.3	2.3
Sill Height Below Chassis Frame (1)	in.	0.5	3.5
	mm	12.7	88.9
Hopper Loading Width	in.	80	80
	mm	2032	2032
Hopper Opening Height	in.	67	67
	mm	1700	1700
Cycle Time (seconds)	complete	15-17	15-17
	reload	5-6	5-6

Cylinder Specification					
Body Cylinders	**Type**	**Model**	**Stages**	**Bore**	
Tailgate Raise	Double Acting	ALL	1	in.	3
				mm	76.2
Packer Blade	Double Acting	ALL	1	in.	4
				mm	101.6
Upper Panel	Double Acting	ALL	1	in.	4.5
				mm	114.3
Ejection	Double Acting Telesscopic	ALL	4	in.	6.5
				mm	165

CONTACT YOUR LOCAL DEALER

2030 Hamilton Place Blvd., Suite 200, Chattanooga, TN 37421
866.FOR.HEIL (866.367.4345) • Fax: 423.855.3478
www.heil.com

© 2011, Heil Environmental, Printed in the U.S.A.
FORM #SWS-000013-112111

jetscan

never jet blind

underground understood

Whether deciding what tool to use, verifying proper cleaning, or determining whether additional inspection is needed—JetScan is the quick, easy way to see what you're jetting. This video nozzle is affordable enough to put on every cleaning truck, yet quickly captures valuable HD footage of pipe that can be viewed moments later on a PC or tablet.

YouTube

See it in action at ***http://bit.ly/VSykc9***

Attach to any jetter.

Capture HD video with self-leveling, illuminated camera.

Record 8 hours of MPEG video footage to SD or SDHC card.

View footage on any SD- or SDHC-compatible tablet or PC.

start recording

Press the record button on the camera. It will flash to indicate recording.

inspect pipe

Capture footage as JetScan advances though the pipe.

review footage

After inspection, stop recording and eject the memory card to view footage on a tablet or PC.

Envirosight

patent pending

www.envirosight.com • (866) 936-8476

quickview

Zoom survey camera for inspecting pipes, manholes and tanks

Change How You See Pipe Infrastructure.

QuickView with new Haloptic targeting technology is a quantum leap forward in the speed, quality and distance of underground infrastructure inspection. With powerful pinpoint illumination and a built-in manhole camera, this new QuickView captures pipeline infrastructure in a single pass. It's all you need to inspect pipe and manhole condition, scope maintenance work, and avoid confined space entry.

More than 2000 operators already trust QuickView for fast, comprehensive inspection. Municipalities use it to identify and prioritize maintenance issues. DOTs use it to assess culvert and storm pipe condition with minimal traffic exposure. Contractors use it to survey pipe before bidding, and to document completed work.

- **See up to 400' in lines 6–60".**
- **Perform a comprehensive infrastructure survey at a fraction the cost of crawler inspection.**
- **Avoid the risk and cost of confined space entry.**
- **Scrutinize targets near and far with perfectly aligned illumination that never needs readjustment.**
- **Double your inspection range with 20 times more light than conventional zoom systems.**
- **Concentric light pattern bathes walls with light.**
- **Pole-mounted digital viewer/recorder captures 22 hours of video and images on Micro SD card.**
- **Ergonomic operator vest holds controls and battery for easy operation.**

Transport camera, vest and viewer/recorder in a self-contained, rugged kit.

Pole-mounted wireless viewer/recorder stores up to 32 GB of video and images.

Patent-pending Haloptic technology uses an engineered lamp/reflector combo to project a halo of light precisely aligned with the camera view. This concentrated beam floods pipe walls with light, and illuminates distant targets for maximum clarity and detail.

Auxiliary wide-angle rear camera views manhole and tank walls.

www.envirosight.com • (973) 252-6700

Envirosight

The QuickView, Haloptic and Envirosight names and logos are trademarks of Envirosight. QuickView carries patents 6,538,732 and 7,009,698; others pending. ©2011 Envirosight, LLC.

ROVVER X

ROVVER X
Envirosight
Envirosight
Zoom
Focus
Light
Elevator
L1
L2
L3
L4
L5
Last Project
Name
Customer
Created
Quick Access
Projects Overview
Direct Control
Settings
R1
R2
R3
R4
R5
Speed
Cable Reel
Speed
Power
On/Off

ROVVER X

The Power of One.

ROVVER X is the one system that lets you do everything—control inspections, view and record digital video, log observations, generate reports, and link directly to asset-management software. All this capability is packed into a simple three-piece layout, with no CCU or other components to clutter your truck.

Though remarkably self-contained, ROVVER X is built on an expandable digital backbone. Not only can you add side-scanning and laser profiling, you can view data from onboard sensors, automate tasks with macros, and measure defects on-screen. And future capabilities are limitless—ROVVER X's firmware updates automatically to the latest features, and its architecture is ready for any accessory—even ones that don't exist yet.

Advanced technology aside, ROVVER X is built for the rigors of sewer inspection. Twelve wheel options—plus camera lift, carriage and illumination accessories—mean ROVVER X transforms in seconds to inspect pipelines 6–72 inches diameter. Its six-wheel drive with proportional steering navigates past obstacles, and overlapping wheels climb offsets better than tracks. Powerful motors and a geared drive train maximize range and pivot capability, even with carriage and pneumatic tires installed.

Ultimately, however, reliability and productivity have made ROVVER the number one crawler brand in the world. ROVVER X continues this tradition with unsurpassed video resolution and 50% more illumination, leaving no detail hidden. Its powerful reel monitors cable tension optically to prevent slack and minimize resistance, allowing one-man operation. And self-diagnostic capabilities, plus access to operating history, only enhance the uptime of the one crawler that already leads the industry.

ROVVER X

Responsive Controls

Control multiple camera and crawler functions at once using proportional joysticks. • View live and recorded video directly on control pendant. • Enhance productivity with custom controls. • Use macros to automate common inspection tasks like joint scanning. • Access specialized functions using intuitive touchscreen interface.

Recording

Capture digital video and images to onboard memory. • Export video, images and data using USB media or network port. • Review inspections directly on screen.

Reporting

Enter observations on touchscreen interface. • Use standard defect catalogs (PACP, WRc), or custom ones. • Generate simple reports, or transfer data to WinCan for full reporting and asset management. • Overlay text on video without external hardware. • View system status and lifetime operating history.

observation entry

manhole-to-manhole report

incline report

Import data directly to WinCan (now or any time in the future) and benefit from: database capabilities (filtering/querying) • full PACP compliance • GIS integration • advanced technology modules (laser, DigiSewer, 3D) • enhanced reporting • support for network installation and enterprise databases (Oracle, SQL) • links to municipal applications (ArcGIS, Hansen, Maximo, CityWorks, GBA, Cartegraph)

WinCan export

system status

Remote Control

Included standard with every system, this wireless remote lets you control camera, crawler, lift and reel from the palm of your hand.

Envirosight

Visibility

Capture the best video resolution possible from an inspection crawler. • Illuminate distant targets with 50% brighter LED lighting. • Boost illumination in large pipelines with auxiliary lamp. • See above flow with high-mount rear-view camera, plus additional rear-view camera on auxiliary lamp.

Adaptability

Remotely adjust camera height over 7" range with lift accessory. • Address pipe of any size, material and condition with 12 wheel options. • Extend height and wheelbase with carriage accessory to inspect pipelines up to 72" diameter.

Maneuverability

Control any number of camera and crawler functions simultaneously. • Pivot in place with zero-degree turn capability. • Use macros to automate common inspection tasks (like joint scanning). • Avoid high-centering on offsets and debris with overlapping wheels.

Range

Crawl up to 1000' with standard cable reel. • Overcome tough obstacles with unmatched maneuverability and power. • Prevent tangles and maximize crawl range with optical cable tension control. • Control reel direction, force, speed and operating mode directly from operator pendant.

Measurement

Track pipe grade with inclinometer. • Monitor temperature and pressure with onboard sensors. • Locate crawler using built-in sonde transmitter. • Easily add side-scanning and laser profiling capability. • Size defects with twin laser dots. • Avoid flips with warnings from integral roll sensor.

Field-Readiness

Inspect from truck, pickup or ATV using simple three-component system layout with no CCU. • Run off generator or inverter with low power requirement. • Inspect pipelines 6–72" diameter with single, reconfigurable crawler design. • Store 1000' of strong, lightweight cable on compact, automated reel. • Transport system in compact, weatherproof enclosure.

©2012 Envirosight, LLC. All rights reserved. The ROVVER X, DigiSewer and Envirosight names and logos are trademarks of Envirosight, LLC. WinCan is a trademark of CD-Lab.

Specifications subject

Complete Capability

With a selection of 12 wheel types—plus a detachable automatic lift, carriage and auxiliary lamp—ROVVER X is the only single system that lets you inspect pipelines 6–72” diameter. With single-screw attachment of wheels, you’ll be ready in record time to inspect any combination of pipe size, material and condition. (For wheel chart, see reverse panel.)

Power to Maneuver

ROVVER was the first inspection crawler to introduce a compact, steerable 6-wheel drive, giving operators the agility to navigate past obstacles that stop other crawlers.

ROVVER X adds to that legacy with CAN-bus controls, which allow you to perform multiple functions concurrently. Now you can steer while panning the camera and adjusting camera lift height. Proportional joysticks give you fine control over speed and direction, and also let you pivot in place (perform zero-degree turns).

Many Ways to Inspect

- **DigiSewer.** Generate side-scan images that capture every square inch of a pipe’s interior surface. With DigiSewer, you can perform detailed inspection three times faster than with CCTV—all at a price point and learning curve anyone can manage. Inspection results are optimized for rapid transmission (3000 ft/GB) and analysis. Attach the DigiSewer laser ring, and you can also scan for pipe deformity.
- **Laser.** ROVVER X’s twin lasers project measurement dots 2” apart, helping you size features and defects. What’s more, when you pan the lasers 360 degrees, WinCan’s laser module automatically determines the ovality of the pipe at that point.

For full laser scanning, connect the ROVVER X laser accessory or the laser-equipped DigiSewer side-scan camera. WinCan’s laser module will track ovality along the full length of the pipe and generate a graphical report.

to change without notice. Patents and patents pending. Revised 3/12.

Onboard Intelligence

ROVVER X uses CAN-bus, the same control architecture built into modern automobiles. This gives ROVVER X capabilities not found anywhere else:

Automatic Updates: When connected wirelessly or via LAN, the pendant updates its firmware automatically, ensuring the latest features and maximum reliability.

Concurrent Control: High-bandwidth communications mean you can control any number of camera, crawler and accessory functions simultaneously.

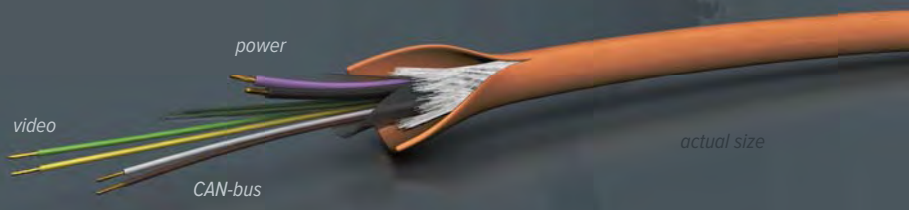

Agility & Uptime: With only six conductors, lightweight ROVVER X cable is easy to pull long distances, and also easy to field-reterminate. Kevlar gives it a 1000-lb. break strength, and a tough jacket maximizes abrasion resistance. CAN-bus architecture supports thousands of functions over a single wire pair.

Future-Readiness: Technology evolves, so ROVVER X's capability isn't hard-wired. Add any number of sensors and end effectors, even ones that don't exist yet.

Information: Access real-time system information using intuitive touchscreen controls—from real-time sensor data to lifetime service and operating history.

Self-Diagnostics: Connect your system to a PC running ROVVER X Studio, and our technicians can log in to read error codes and perform diagnostic tests.

To perform side-scanning, all you need is a DigiSewer camera (shown here) connected to your crawler, and WinCan software with the Scan Explorer module.

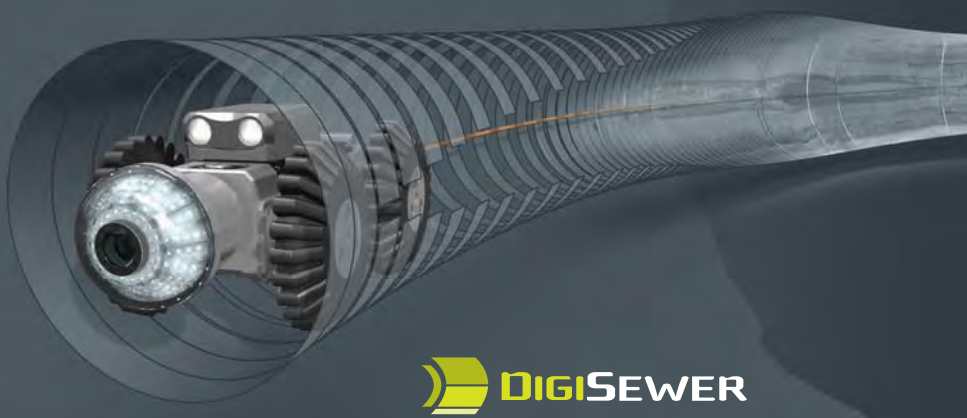

DIGISEWER

Wheels

ROVVER X wheel options help you address any combination of pipeline diameter, material and condition. With single-screw attachment, wheels swap out in seconds, and keyed axles ensure positive traction.

3.4”

3.8”

4.3”

5.3”

8.7”

Pneumatic wheels require the ROVVER X accessory carriage.

10.2”

Specifications

system

ratings . . . . . CE, NRTL
power . . . . . 120-240 Vac, 60 Hz
viewing capability . . . . . pipelines 6–72" diameter

camera (RCX90)

imager . . . . . color ¼" CCD
resolution . . . . . 720 × 576 pixels
zoom lens . . . . . 120× (10× optical, 12× digital)
pressure rating . . . . . 1 bar
features . . . . . auto shutter; auto/manual focus
illumination . . dimmable shadowless 40-LED array
articulation . . . . . ±145 deg tilt; infinite pan
measurement . . . . . twin laser diodes
sensing . . . temperature, pressure, pan/tilt angles
size . . . . . 6.6" × 3.1" × 2.8" (168 × 81 × 72 mm)
weight . . . . . 3.3 lb (1.5 kg)
materials . . . . . aluminum, stainless steel

crawler (RX130)

wheels 6
turn radius . . . . . down to 0.0"
camera . . . color rear-view w/ high-lux tri-LED lamp
sensors . . . . . pitch, roll, temperature, pressure
pressure rating . . . . . 1 bar
size . . . . . 12.2" × 4.4" × 3.2" (310 × 111 × 90 mm)
weight . . . . . 13.2 lb (6 kg)
materials . . . . . aluminum, stainless steel
sonde transmitter . . . . . 33 kHz / 512 Hz

control pendant (VC200)

controls . . twin proportional joysticks; push-button controls *(power, lamp intensity, camera lift, zoom, focus, reel mode, pull force, crawl speed/direction)*; 10 soft keys; touchscreen
touchscreen . . . . . 8.4" color (800×600 pixels)
video capture MPEG-4 (H.256)
image capture . . . . . JPEG
storage . . . . . external USB; internal flash (64 GB)
connectivity . . . . . Ethernet
size . . . . . 13.5" × 9.3" × 3" (342 × 236 × 75 mm)
weight . . . . . 4.4 lb (2 kg)
firmware . . . . . VisionControl (auto-updating)
bundled software . . . . . VisionReport

axial auxiliary lamp (optional)

lamps . . . . . four (4) hi-lux tri-LED lamps
dimensions . . 4.6" × 5.2" × 5.2" (117 × 132 × 132 mm)
materials . . . . . aluminum, stainless steel

cable reel (RAX300)

cable length . . . . . 1000' (300 m)
cable diameter . . . . . ¼" (6.5 mm)
cable weight . . . . . 0.03 lb/ft
cable strength . . . . . 1000 lb
cable conductors 6
controls (local) . . . . . power, emergency stop
controls (via pendant) . . . . . auto/manual, speed, forward/reverse, pull strength
sensors . . . . . tension, tilt
size . . . . 24.2" × 12.4" × 19.3" (620 × 315 × 490 mm)
weight . . . . . 68.3 lb (31 kg)
connections . . . . pendant, service port, video in/out

camera lift (optional)

lift range . . . . . 3.1–10.2" (132–312)
materials . . . . . aluminum, stainless steel

carriage (optional)

wheelbase (width/length) . . . 14.5"/12.2" (368/310 mm)
weight . . . . . 34.2 lb (15.5 kg)
materials . . . . . aluminum, stainless steel

auxiliary lamp/rear camera (optional)

forward illumination . . . . . twin hi-lux tri-LED lamps
camera . . . color rear-view w/ high-lux tri-LED lamp
sonde transmitter . . . . . 33 kHz / 512 Hz
materials . . . . . aluminum, stainless steel

basic system

- RX130 crawler body
- RCX90 camera head
- RAX300 reel with 1000' cable
- VC200 control pendant
- VisionReport software
- wireless remote control
- small rubber wheels (6)
- medium rubber wheels (4)
- medium grease wheels (4)
- large rubber wheels (4)
- wheel spacers (4)
- crawler body transport case
- camera head transport case
- tools (wrenches, pressure kit)

optional accessories

- laser profiler
- DigiSewer side-scan camera
- remote camera lift
- large-pipe carriage
- auxiliary lamp/rear-view camera
- desktop mount for pendant
- USB media for pendant
- wheel sets (see chart on flap)
- cable management accessories
- lowering devices
- WinCan observation and asset management software
- other accessories

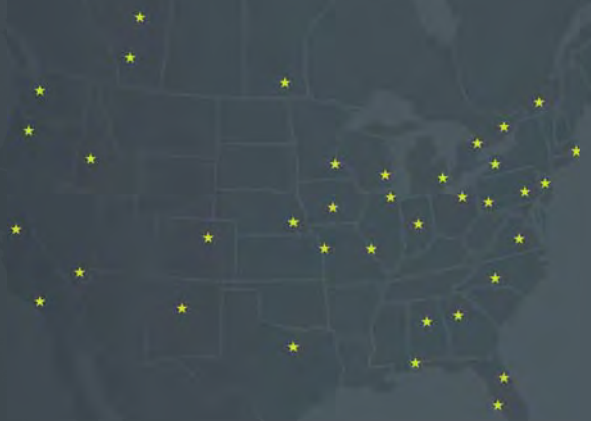

Envirosight LLC

www.envirosight.com • (866) 936-8476 • (973) 252-6700
111 Canfield Ave., Unit B3 • Randolph, NJ 07869

Regional sales, support and service partner network spanning North and South America.

Envirosight custom inspection trucks, vans, trailers and enclosures make field inspection with your ROVVER X even easier and more productive.

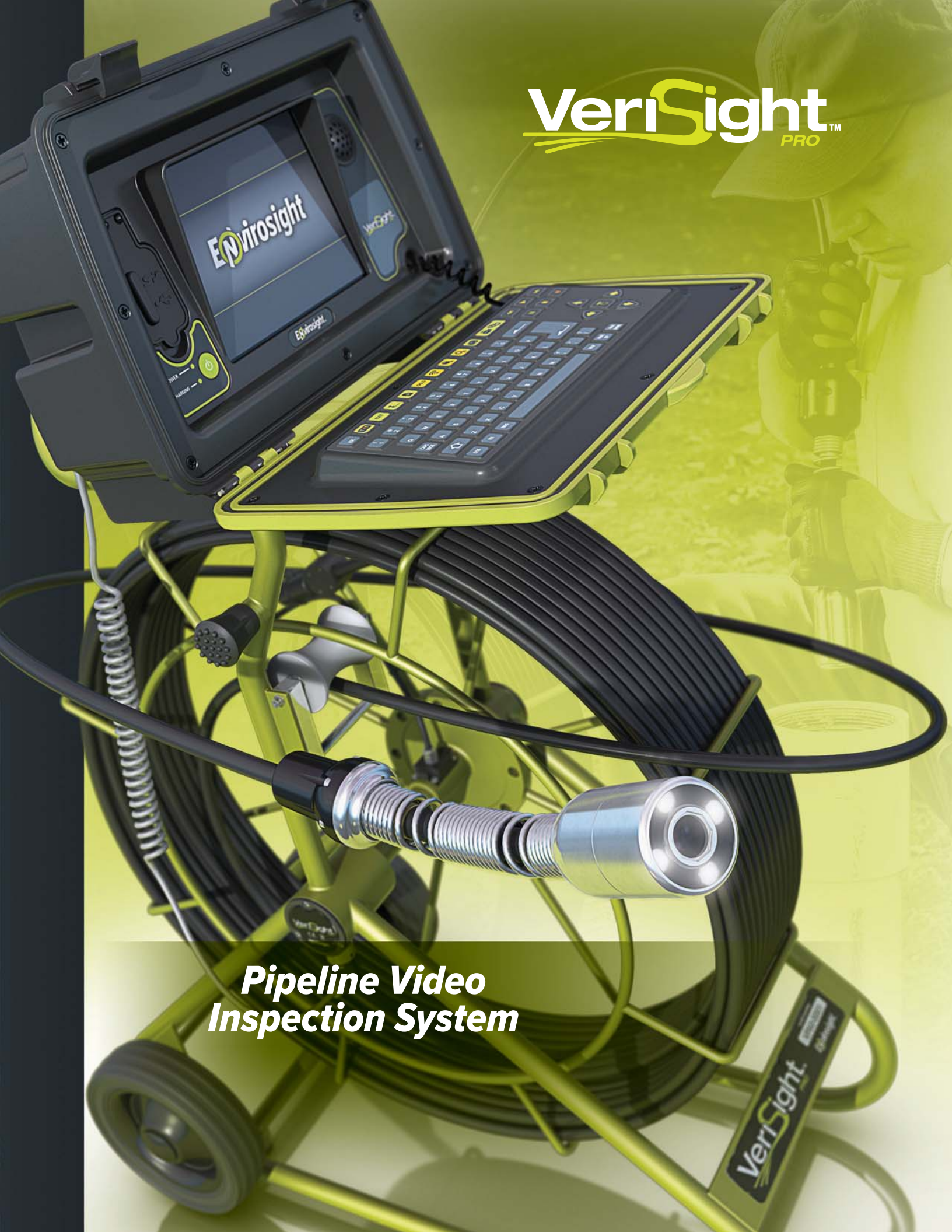

Pipeline Video Inspection System

VeriSight™ PRO

Total Inspection Productivity

VeriSight Pro has everything you need to inspect pipes, document your findings, and generate reports for on-site delivery†. It captures detailed footage under challenging conditions, and its advanced interface offers robust tools—including observation entry and reporting options—and has USB and SD media bays for easy offload of data, video, images and reports.

Offloading video, images and data is as simple as plugging in a USB stick or SD/SDHC card.

† *Observation entry and reporting modules are available as options.*

Controls

VeriSight Pro's interface displays real-time footage on an 8" LCD, records up to 90 hours of video to internal memory, and offers the option to enter observation data for upload directly to WinCan. With its customizable interface, you can zoom video 3X, capture still images, enter up to 16 pages of text, browse thumbnail galleries, and select among several available languages. Housed in rugged ABS plastic with an IP54 rating, the controller runs off mains power, vehicle power, or an internal rechargeable 6-hr battery.

Data Entry & Reporting

VeriSight Pro is the only push camera available with optional data entry and reporting capabilities. With these options, you can enter standards-compliant observations using onboard defect catalogs, and then generate reports (right) and save them to USB media. Imagine—your client gets a deliverable before you leave the job site!

You can also export observation data seamlessly to WinCan software (sold separately) and benefit from: database capabilities • PACP and LACP compliance • GIS integration • advanced technology modules • enhanced reporting • support for network installation and enterprise databases (Oracle, SQL) • links to municipal apps (ArcGIS, Cartegraph, CityWorks, GBA, Hansen, Maximo)

Reel

Welded steel construction with a protective powder coat finish mean VeriSight Pro's reel stands up to the punishment of daily field use. It's sealed slip ring ensures reliable operation, while measurements from the integral distance counter appear onscreen. The VeriSight Pro reel is available in three sizes:

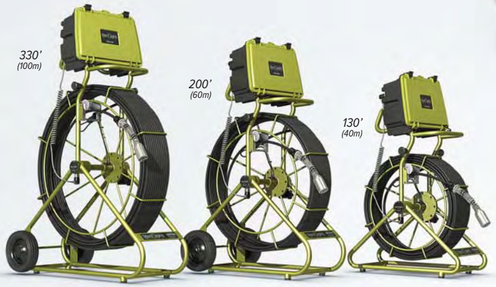

VeriSight Pro's self-leveling head keeps video upright, so you can maintain your orientation.

Camera

VeriSight Pro's self-leveling camera captures crisp color footage from pipes 2" in diameter and larger. LED lamps deliver variable-intensity, shadowless illumination adjustable to 12,500 lux (at 6"). The camera's stainless construction withstands harsh conditions, and its unique spring facilitates navigation through bends and P traps. The signal from its tri-band sonde can be picked up by most any locator.

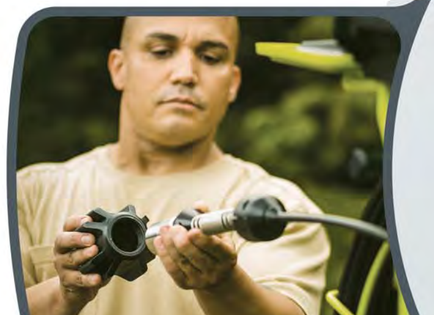

In 3" pipe (top) and larger.

Though VeriSight Pro inspects pipes as small as 2", you can optimize your view in lines 3" and larger using the supplied adapter kit (includes three centering devices, maneuverability collar, and wrench for quick installation).

Envirosight LLC

Functionality At Your Fingertips

Use the VeriSight Pro control unit to view, record and annotate inspection footage from any composite video source.

Capture Footage. Grab MPEG video and JPEG images, and zoom up to 3X on video.

Enter Observations. Use optional data-entry module to log inspection findings.

Review Footage. Organize videos and images in folders, then find them using the thumbnail gallery. Review media using standard controls.

Generate Reports. Use optional reporting module to generate an inspection report, then transfer it to USB media for on-site delivery.

Offload Data. Copy video, images and data to USB or SDHC media for easy transfer to PC and seamless integration with WinCan's reporting and querying capabilities.

Write Screen Text. Type and store up to 16 pages of onscreen text. Customize text color, position and background color.

Control Hardware. Set sonde frequency, adjust illumination, and zero/offset footage.

Configure Preferences. Set language and date/time; establish file formats and naming conventions; adjust camera parameters; choose interface theme and power-saving scheme; update firmware.

System

video format . . . . . selectable NTSC or PAL
battery . . . . . 6-hour lithium-ion
charging . . . . . mains power (100-240 Vac) or vehicle power (12 Vdc) using supplied adapters

Controller

display . . . . . 8" TFT LCD (800×600 pixels)
keyboard . . . . . full QWERTY membrane keyboard with function keys and navigation pad
video recording . . . . . MPEG4 (WinCan compatible)
image capture . . . . . JPEG (live or from recorded video)
text overlay . . 16-page (selectable text/background colors)
internal memory . . . . . 16 GB (expandable to 128 GB)
external media . . . . . SDHC and USB 2.0
language support . . . . . English, Spanish, French
connections . . . . . power, reel
environmental rating IP54
weight . . . . . 6.6 lb (3kg)
size . . . . . 17.1" × 9.8" × 5.5" (435 × 250 × 140 mm)

Camera

imager . . . . . ¼" color CCD with DSP
effective pixels . . . . . 512×582
resolution . . . . . 470 HTVL
sensitivity . . . . . < 1.0 lux
aperture / field of view . . . . . F2.5 / 75 deg
image orientation . . . . . auto-leveling
size . . . . . 1.61" (41 mm) dia.
illumination system . . . . . 4 LED
illumination intensity . . adjustable (up to 12.5K lux at 6")
construction . . . . . stainless steel
pipe compatibility . . . . . 2" (50 mm) and up
sonde . . . . . 33 kHz, 512 Hz, 640 Hz (selectable)

Reel

construction . . . . . welded steel
finish . . . . . powder coat
distance counter units . . . . . feet, meters
controls . . . . . reel brake, reel lock

130' (40 m) reel
weight / height . . . . 33 lb. (15 kg) / 24.4" (620 mm)

200' (60 m) reel with wheels
weight / height . . . 44 lb. (20 kg) / 35.0" (890 mm)

330' (100 m) reel with wheels
weight / height . . . 66 lb. (30 kg) / 37.8" (960 mm)

©2012 Envirosight, LLC. All rights reserved.
VeriSight Pro and Envirosight names/logos are trademarks of Envirosight.
WinCan name/logo are trademarks of CD-Lab and used under license.
Specifications subject to change without notice.

System Components

- push rod reel
- illuminated, self-leveling color camera with sonde
- control unit with internal battery
- reel-to-controller cable
- car power adapter
- mains power adapter
- pipe adapter kit
- 8 GB USB drive
- components case

Options

- observation entry module
- reporting module
- composite video input pigtail
- SD/SDHC card for data storage
- replacement camera windows
- roller skids (below)

Envirosight LLC

www.envirosight.com

(866) 936-8476 • (973) 252-6700

111 Canfield Ave, Unit B3
Randolph, NJ 07869

Worldwide Sales & Service

SERIES MT7 – MUNICIPAL TRACTOR

FOR MAXIMUM PRODUCTIVITY, SAFETY AND COMFORT

.... FROM THE LEADER IN THE MUNICIPAL TRACTOR FIELD

SPECIFICATIONS

ENGINE	STD	OPT
John Deere Tier 4 Final Displacement 275 cubic inch, 4.5 litre Horsepower 74 BHP @ 2,500 rpm Torque 224 lb-ft @ 1600 rpm	STD	
Equipped with cold start aid, block heater Air breather warning light	STD	

FEATURES	STD	OPT
Certified R.O.P.S cab structure	STD	
Digital dash: tachometer, speedometer, hour meter, fuel level, engine coolant temp., hydraulic oil temp., engine oil pressure, voltmeter	STD	
7-speed heater / defroster / AC	STD	
Climate Controlled Air conditioning / auxiliary heat and pressurization with 8 amber strobe lights	STD	
2 outside and 1 inside rear view mirror	STD	
3 point retractable seat belt - Orange	STD	
AM / FM stereo, dual speakers, external aerial with amplifier	STD	
Cell phone holder, door pocket, storage tray	STD	
Front P.T.O	STD	
Tilt steering column with horn, self cancelling signal lever, hazard button	STD	
Left and right side slider windows	STD	
Intermittent front wiper and washer	STD	
Rear wiper and washer		OPT 27
High back, fabric covered air ride seat with lumbar support	STD	
20 gpm main hydraulic gear pump 14 gpm secondary hydraulic gear pump Low hydraulic oil warning	STD	
Reversing engine fan	STD	
F-N-R joystick	STD	
Battery disconnect switch	STD	
Remote battery terminal	STD	
Ride control	STD	
Cruise control	STD	
Fuel capacity of 92 Litres, 24 US Gallons	STD	

POWERTRAIN	STD	OPT
Sauer Danfoss hydrostatic / electronic transmission and motor	STD	
Control by electronic foot pedal programmed to control hydrostatic independently or both engine rpm and hydrostatic simultaneously	STD	
Trackless mechanical transmission with high / low range and neutral	STD	
10:1 deep reduction planetary transmission When coupled to mechanical transmission, 4 speed ranges instead of 2 Deep low is 0 – 10 feet / minute		OPT 9
Dana style Model 60 full float axles with new heavy duty alloy spindles Limited slip differentials 7,000 lbs capacity	STD	
Electric locking differential front axle only		OPT 10

SAFTY FEATURES	STD	OPT
Neutral safety start switch	STD	
Automatic hydraulic power shut offs if operator leaves seat	STD	
Automatic PTO shut down if operator leaves seat	STD	
Automatic engine shut down if operator leaves seat with shifter not in neutral position	STD	
Automatic hydraulic power shut offs if rotary wings are raised	STD	
Pinch point, danger, caution decals	STD	
Backup camera / Backup alarm	STD	
Articulation lock	STD	
Wire finger guard protection from engine fan blades Reflective striping on both sides and rear of tractor	STD	
External lift cylinder switch for attachment hookup	STD	

LIGHTS	STD	OPT
4 - Halogen headlights 1 - Halogen backup light 2 - Rubber mounted shockproof LED tail lights 1 - Interior dome light Front and rear signal lights and 4 way flashers - LED	STD	
Second rear backup light		OPT 15
Additional high mount rear tail lights		OPT 16
Headlight, signal / marker light guards		OPT 18

LCT65

Belt Driven Vacuum Leaf Collector

- **John Deere 74HP Diesel Engine**
  74HP diesel
- **Belt Driven**
  prolongs engine and PTO life
- **Forward Locking Hose Boom**
  easier and safer transportation
- **Hydraulic Hose Boom**
  easier leaf vacuuming

*Specifications subject to change at any time without notice, units may be shown with optional equipment and/or color

www.xtremevac.com

LCT65 Vacuum Leaf Collector Basic Specifications

Engine	John Deere EWX 2.9L, 74HP, 3 cylinder diesel engine. Final Tier 4 emissions.
Engine Mount	Engine is equipped with four 45 degree slant designed engine mounts to eliminate vibration.
Air Cleaner	Dry element with pre-cleaner.
Radiator	Pressurized, heavy duty. Trash style with 6-blade fan.
Radiator Screen	Constructed of ½" expanded flattened steel with steel mesh. Screen is bottom hinged to allow for cleaning without powering down the engine.
Engine Controls	Mounted in a hinged instrument panel. Gauges include: Tachometer, hour meter, volt meter, fuel gauge and oil pressure gauge. All monitoring gauges have backlighting. Automatic safety shutdown for high temperature or low oil pressure with LED indicator lights. Glow plug control provided for cold weather start aid.
Engine Sheet Metal	Engine is covered by a custom sheet metal enclosure constructed of 16-gauge steel. The enclosure has front and rear access doors, which are louvered for proper air circulation. Two doors are provided on top of the enclosure for convenient access to the radiator cap and oil fill cap.
PTO	Heavy duty 13" automotive style PTO with a 2.25" shaft.
Drive Type	3-groove Kevlar power band.
Trailer	One-piece construction, ¼" formed steel plate. 48" wide x 66" long.
Axle	2.5 inch Torflex axles rated at 4,500 pounds with electric brakes
Tires	ST225-75R15 radial tires mounted on steel white spoke rims.
Pintle Hook	Heavy duty pintle eye that is height adjustable without the use of tools.
Tow Tongue	89" long x 4" x 4" steel tubing
Parking Jack	Heavy duty top wind jack with steel wheel.
Trailer Lighting	LED stop and turn signals with turn signal indicators. LED strobe is mounted in the rear.
Impeller	28" diameter with 6 gusseted blades constructed of 3/8" thick abrasive resistant T-1 steel with a Brinell hardness exceeding 400. Each blade is gusseted on the back side and welded to a 1/4" thick backing plate. Impeller blades are flat with serrated tips for increased wear. Impeller is secured to the shaft via a taper locking bushing.
Impeller Bearings	Two 2" diameter double roller 4 bolt flange type bearings
Impeller Shaft	2" diameter precision machined steel.
Blower Housing	Outer housing is constructed of 3/16" thick welded steel, front and back plates are 10-gauge steel. A safety kill switch shuts down the engine when the hose is disconnected.
Liners	Made of ¼" abrasive resistant steel.
Suction Inlet	Located on the curb side and incorporates quick access via removable rods.
Intake Hose	16" diameter x 120" long. Heavy duty wire reinforced .060" thick flexible urethane hose
Hose Boom	Hydraulically controlled with an electric operated hydraulic pump. Boom pivots in a greaseable tube for effortless movement. Hydraulic cylinder is 1.5" diameter, with a minimum stroke length of 12".
Boom Controls	100% waterproof marine-style switch located on the intake hose nozzle.
Intake Nozzle	16" diameter nozzle with handle constructed of 12 gauge steel.
Exhaust Duct	Constructed of 12-gauge steel and centered directly over the tongue for a balanced unit.
Fuel Tank	30 gallon capacity constructed out of ¼" thick polyethylene.
Paint	Each part is primed with a rust inhibitor primer and is painted with two coats of automotive quality paint. The parts are then assembled on the unit so that bolts, nuts, cables and grease fittings are not painted. Standard color is White.
Options	90 degree inlet elbow curb side pickup

***Specifications subject to change at any time without notice, units may be shown with optional equipment and/or color**

Modular Sheet Metal

The engine is completely enclosed in a customized, modular sheet metal package that has been designed for convenience as well as engine performance

Hydraulic Hose Boom

Maneuvering the hose boom is almost effortless because the boom is raised and lowered hydraulically using push button switches.

Customized Sheet Metal

Customized, modular sheet metal with louvers is provided to protect the engine while allowing access to all the critical maintenance areas.

Sold and Serviced By:

XTREME VAC

www.xtremevac.com

122115

800-632-7989

SCL65SM-3X

"One Man Operation" Leaf Collector

The Xtreme choice of professional landscapers and municipalities

- Reduce Labor Costs
- Collect Leaves Faster
- Increase Productivity
- Save Money

*Specifications subject to change at any time without notice, units may be shown with optional equipment and/or colors

www.xtremevac.com

SCL65SM-3X "One Man Operation" Leaf Collector Basic Specifications

Engine	John Deere EWX 2.9L 3 cylinder, 74 HP diesel engine. Final Tier 4 emissions.	
Engine Mount	Engine is equipped with four 45 degree slant designed engine mounts to eliminate vibrasion.	
Air Cleaner	Dry element with pre-cleaner.	
Radiator	Pressurized, heavy duty. Trash style with 6-blade fan.	
Radiator Screen	Constructed of ½" expanded flattened steel with steel mesh. Screen is bottom hinged to allow for cleaning without powering down the engine.	
Engine Controls	Gauges include: Tachometer, hour meter, volt meter, fuel gauge and oil pressure gauge. All monitoring gauges have backlighting. Automatic safety shutdown for high temperature or low oil pressure.	
Engine Sheet Metal	Engine is covered by a custom sheet metal enclosure constructed of 16-gauge steel. The enclosure has front and rear access doors, which are louvered for proper air circulation. Two doors are provided on top of the enclosure for convenient access to the radiator cap and oil fill cap.	
PTO	Heavy duty 13" automotive style PTO with a 2.25" shaft.	
Drive Type	3-groove Kevlar power band.	
Impeller	28" diameter with 6 gusseted blades constructed of 3/8" thick abrasive resistant T-1 steel with a Brinell hardness exceeding 400. Each blade is gusseted on the back side and welded to a 1/4" thick backing plate. Impeller blades are flat with serrated tips for increased wea . Impeller is secured to the shaft via a taper locking bushing.	
Impeller Shaft	2" diameter precision machined steel.	
Impeller Bearings	Two 2" diameter double roller 4 bolt flange type bearings	
Blower Housing	Outer housing is constructed of 3/16" thick welded steel, front and back plates are 10-gauge steel. A safety kill switch shuts down the engine when the hose is disconnected.	
Liners	Made of ¼" abrasive resistant steel.	
3-Axis Boom	The intake hose shall be a 3-axis(in/out,up/down & forward/reverse) that is hydraulically operated. It provides a 170 degree working arc from the front of the truck all the way towards the rear. All three boom functions are performed by hydraulic cylinders. For transport, the boom shall store the hose toward the rear and rest in a cradle.	
Boom Support	The boom assembly shall be mounted to 4" square tubing frame. The entire boom mounting assembly is hinged to gain full access to the blower housing. Complete access for service and maintenance of the impeller and blower housing liners do not require the removal of the 3-axis boom assembly.	
Joystick Controller	A mult-function joystick shall be mounted in the cab of the chassis to operate the boom functions. The joystick shall have a "dead mans" trigger to prevent accidental boom movement.	
Suction Hose	16" diameter x 120" long. Heavy duty, wire reinforced .060" thick flexible urethane hose fitted with a nozzle constructed of 12-gauge steel	
Hydraulics	Gear driven hydraulic pump connected directly to the engine powers the 3-Axis hose boom and dumping hopper. A hydraulic reservoir with an in-line filter and sight gauge is provided	
Dumping Hoist	Uses a Crysteel scissor style double acting hoist capable of dumping 15.2 tons for the 14 CY, 21.5 tons for the 20 CY and 26.6 tons for the 25 & 30 CY units.	
Box Container	Self dumping container constructed of 12-gauge steel with vented top and side hinge doors that lock in the open position for dumping. Available in 14, 20, 25 & 30 cubic yard capacities.	
Top Screens	Two (14 & 20) or three (25 & 30) easily removable 1/2" expanded steel mesh screens are located on the top of the box container.	
Chassis	Heavy duty channel steel, formed and welded. Chassis is constructed of 3"x8" tubular steel with a 1/4" wall thickness.	
Lighting	Stop/turn signals with turn signal indicators are standard. Dual LED strobes are mounted in the rear.	
Fuel Tank	30 gallon capacity constructed out of ¼" thick polyethylene.	
Paint	All components pre-painted with automotive quality paint – hopper to be White. Engine compartment & vacuum blower housing to be painted battleship grey Chassis frame and underside of hopper painted: Gloss Black.	
Options	HD rubber suction hose	Hook lift version with sub-frame
	Bottom Exhaust for hopper	Air Scoop on top of hopper
	Light Bar on hopper nose cone with 4 front & 1 per side amber flashing LED lights	Hydraulc rear door latches for single top hinged door.
	Rear color camera with screen with audio	Chipper door and trailer hitch with wiring
	Poly fenders on rear wheels	Fluid drive coupler in lieu of standard clutch

3 Axis Hose Boom

The intake hose has 3 axis movement using heavy duty cylinders and a chain drive system for the forward and reverse movements.

In-Cab Joystick Controls

The boom is controlled with a joystick located in the cab for effortless leaf collection.

Top Hinge Rear Doors

The top hinge door and optional hydraulically controlled door latches allow the operator to open and close the rear door with the press of a switch from inside the cab.

***Specifications subject to change at any time without notice, units may be shown with optional equipment and/or colors**

XV600

Belt Driven Leaf Collector

- **John Deere Diesel Engine**
  74HP turbo diesel
- **Belt Driven**
  prolongs engine and PTO life
- **32” Diameter Impeller**
  unsurpassed suction
- **Hydraulic Hose Boom**
  easier leaf vacuuming

74 HP John Deere Diesel Engine

The Xtreme choice of professional landscapers and municipalities

*Specifications subject to change at any time without notice, units may be shown with optional equipment and/or colors

www.xtremevac.com

XV600 Belt Driven Leaf Collector Basic Specifications

Engine	John Deere 4045T turbo diesel 4 cylinders rated for 74 HP @ 2600 RPM, certified for Interim Tier 4 emissions	
Air Cleaner	Dry element with pre-cleaner.	
Radiator	Constructed of ½" expanded flattened steel with steel mesh. Screen is bottom hinged to allow for cleaning without powering down the engine.	
Radiator Screen	Constructed of ½" expanded flattened steel with steel mesh. Screen is bottom hinged to allow for cleaning without powering down the engine.	
Engine Controls	Mounted in a hinged instrument panel. Gauges include: Tachometer, hour meter, volt meter, fuel gauge and oil pressure gauge. All monitoring gauges have backlighting. Automatic safety shutdown for high temperature or low oil pressure with LED indicator lights.	
Engine Sheet Metal	Engine is covered by a custom sheet metal enclosure with a removable top without tools. The enclosure has front and rear access doors, which are louvered for proper air circulation and twist and turn latches. Two doors are provided on top of the enclosure for convenient access to the radiator cap and oil fill cap	
PTO	Heavy duty 13" automotive style PTO with 2.25" diameter shaft.	
Drive Type	4 -groove power band.	
Trailer	One-piece construction, 1/4" formed steel plate.	
Axle	Rubber Torflex axle rated at 6,000 pounds with electric brakes	
Tires	ST225-75R15 radial tires mounted on steel white spoke rims and EZ lube hubs.	
Tow Tongue	Telescoping tongue, adjustable. Constructed of 4" x 5" steel tubing.	
Pintle Hook	Heavy duty pintle eye that is height adjustable without the use of tools.	
Parking Jack	Heavy duty top wind jack with steel wheel.	
Trailer Lighting	LED type stop and turn signals with turn signal indicators. LED amber flashing light in the rea .	
Impeller	32" diameter with 6 gusseted blades constructed of 3/8" thick abrasive resistant T-1 steel with a Brinell hardness exceeding 400. Each blade is gusseted on the back side and welded to a 1/4" thick backing plate. Impeller blades are flat with serrated tips for increased wea . Impeller is secured to the shaft via a taper locking bushing.	
Impeller Bearings	Two 2-1/4" diameter double roller 4 bolt flange type bearings. The bearings have a dynamic load rating of 27,280 lbs and a static load rating of 31,920 lbs. Bearings are mounted on plates that allow them to be removed along with the impeller and shaft by removing only eight bolts.	
Impeller Shaft	2-1/4" diameter precision machined steel.	
Blower Housing	40° degree style for minimal resistance. Outer housing is constructed of 10 gauge welded steel, front and back plates are 7-gauge steel. Inspection/clean out door is located on face to facilitate convenient inspection of internal contents or condition. A safety kill switch is located on the door to shut down the engine when the door is opened.	
Liners	Slip-in style which require no bolts. Made of 1/4" abrasive resistant steel.	
Suction Inlet	Located on the curb side and incorporates quick access via removable rods.	
Intake Hose	16" diameter x 120" long. Heavy duty wire reinforced .060" thick flexible urethane hose	
Exhaust Duct	Rectangular duct extension of the 40° blower housing. Constructed of 12-gauge steel and entered directly over the tongue for a balanced unit.	
Exhaust Hose	16" diameter x 48" long heavy duty wire reinforced 3/8" thick flexible rubber hose	
Hose Boom	Hydraulically controlled with an electric operated hydraulic pump. Boom pivots on two 1.5" diameter two-bolt flange bearings for effortless movement. The boom pivots forward to lock into travel position. Hydraulic cylinder is 1.5" diameter, with a minimum stroke length of 12 inches.	
Boom Controls	Push button style switch located on the intake hose nozzle.	
Intake Nozzle	16" diameter nozzle with handle constructed of 12 gauge steel.	
Fuel Tank	44 gallon capacity fuel tank manufactured of 1/4" thick roto-molded polyethylene, located under the trailer bed.	
Tool Rack	Rake and tool rack capable of holding 5 tools.	
Storage	Storage compartment with twist and turn latch.	
Paint	All metal parts are thoroughly cleaned, primed, painted and dried before assembly. Each part is primed with a rust inhibitor primer and is painted with two coats of automotive quality paint. The parts are then assembled on the unit so that bolts, nuts, cables and grease fittings are not painted. Standard color is White	
Options	Hydraulic parking jack with caster wheel	2 axis (up/dn & left/right) hydraulic hose boom with central hydraulic system
	PTO safety engagement system	Heavy Duty rubber suction hose
	Remote electric engine throttle with controls on the suction hose handle.	Hydraulic curb nozzle attachment in lieu of suction hose
	Fluid drive coupler in lieu of clutch and PTO.	Consult factory for other engine options.

Maneuvering the hose boom is almost effortless because the boom is raised and lowered hydraulically using push button switches and the boom swivels side to side on two flange bearings

Engine controls are connected via a state-of-the-art circuit board with circuit breakers. An electrical relay is used to prevent the electrical system from external loads. Gauges include: tachometer, hour meter, volt meter, oil pressure gauge and fuel gauge. All monitoring gauges are back lit.

The drive bearings assembly consists of two heavy duty four bolt flange bearings with double row, precision sherical roller bearings. (shown with optional color)

The PTO/Clutch is a heavy duty 13" automotive style assembly. (shown with optional color)

041615

***Specifications subject to change at any time without notice, units may be shown with optional equipment and/or color**

Sold and Serviced By:

XTREME VAC

www.xtremevac.com

800-632-7989

XV6000

Belt Driven Vacuum Leaf Collector

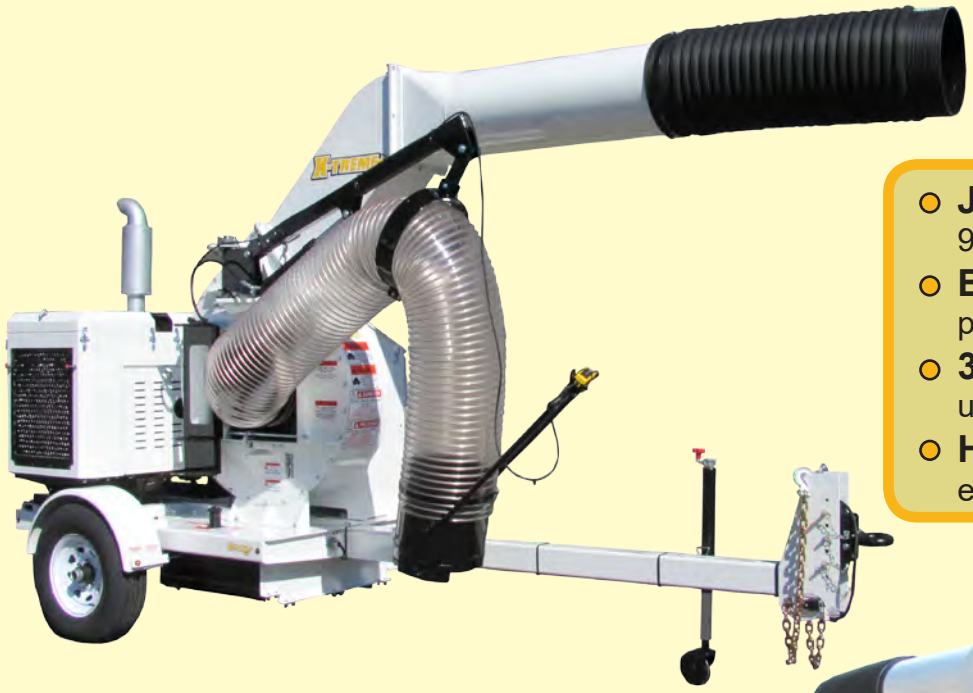

- **John Deere Diesel Engine**
  99HP turbo diesel
- **Belt Driven**
  prolongs engine and PTO life
- **38” Diameter Impeller**
  unsurpassed suction
- **Hydraulic Hose Boom**
  easier leaf vacuuming

99HP John Deere Diesel Engine

The Xtreme choice of professional landscapers and municipalities

***Specifications subject to change at any time without notice, units may be shown with optional equipment and/or colors**

www.xtremevac.com

XV6000 Belt Driven Leaf Collector Basic Specifications

Engine	John Deere 4045T (Tier 3) water cooled turbo diesel engine; 99 HP; 4.5 Liter (276CID) with wet-sleeve engine liners.	
Air Cleaner	Dry element with pre-cleaner.	
Radiator	Pressurized, heavy duty. Trash style with 6-blade fan.	
Radiator Screen	Constructed of ½" expanded flattened steel with steel mesh. Screen is bottom hinged to allow for cleaning without powering down the engine.	
Engine Controls	Mounted in a hinged instrument panel. Gauges include: Tachometer, hour meter, volt meter, fuel gauge and oil pressure gauge. All monitoring gauges have backlighting. Automatic safety shutdown for high temperature or low oil pressure with LED indicator lights.	
Engine Sheet Metal	Engine is covered by a custom sheet metal enclosure constructed of 16-gauge steel. The enclosure has front and rear access doors, which are louvered for proper air circulation. Two doors are provided on top of the enclosure for convenient access to the radiator cap and oil fill cap.	
PTO	Heavy duty 13" automotive style PTO with a 2.25" shaft.	
Drive Type	5-groove Kevlar power band.	
Trailer	One-piece construction, ¼" formed steel plate.	
Axle	3.5 inch rubber Torflex axle rated at 7,200 pounds with electric brakes	
Tires	ST235-85R16 radial tires mounted on steel white spoke rims with EZ lube hubs.	
Tow Tongue	Telescoping tongue, adjustable. Constructed of 4" x 6" steel tubing.	
Pintle Hook	Heavy duty pintle eye that is height adjustable without the use of tools.	
Parking Jack	Heavy duty top wind jack with steel wheel.	
Trailer Lighting	LED type stop and turn signals with turn signal indicators. LED amber strobe is mounted in the rear.	
Impeller	38" diameter with 6 gusseted blades constructed of 3/8" thick abrasive resistant T-1 steel with a Brinell hardness exceeding 400. Each blade is gusseted on the back side and welded to a 1/4" thick backing plate. Impeller blades are flat with serrated tips for increased wear. Impeller is secured to the shaft via a taper locking bushing.2-15/16" diameter.	
Impeller Bearings	Two 2-15/16" diameter double roller 4 bolt flange type bearings. The bearings have a dynamic load rating of 42,940 lbs and a static load rating of 53,960 lbs. Bearings are mounted on plates that allow them to be removed along with the impeller and shaft by removing only eight bolts.	
Impeller Shaft	2-15/16" diameter precision machined steel.	
Blower Housing	40° degree style for minimal resistance. Outer housing is constructed of 10 gauge welded steel, front and back plates are 7-gauge steel. Inspection/clean out door is located on face to facilitate convenient inspection of internal contents or condition. A safety kill switch is located on the door to shut down the engine when the door is opened.	
Liners	Slip-in style which require no bolts. Made of 1/4" abrasive resistant steel.	
Suction Inlet	Located on the curb side and incorporates quick access via removable rods.	
Intake Hose	16" diameter x 120" long. Heavy duty wire reinforced 3/8" thick flexible rubber hose	
Exhaust Duct	Rectangular duct extension of the 40° blower housing. Constructed of 12-gauge steel and entered directly over the tongue for a balanced unit.	
Exhaust Hose	16" diameter x 48" long heavy duty wire reinforced, 3/8" thick flexible rubber hose	
Hose Boom	Hydraulically controlled with an electric operated hydraulic pump. Boom pivots in a greaseable tube for effortless movement. Hydraulic cylinder is 1.5" diameter, with a minimum stroke length of 12".	
Boom Controls	Push button style switch located on the intake hose nozzle.	
Intake Nozzle	16" diameter nozzle with handle constructed of 12 gauge steel.	
Fuel Tank	44 gallon capacity fuel tank manufactured of 1/4" thick roto-molded polyethylene, located under the trailer bed.	
Paint	Each part is primed with a rust inhibitor primer and is painted with two coats of automotive quality paint. The parts are then assembled on the unit so that bolts, nuts, cables and grease fittings are not painted. Standard color is White.	
Options	Hydraulic Parking Jack with caster wheel	custom paint color
	Remote electric engine throttle with controls on the sunction hose handle	2 axis (up/down & left/right) hydraulic hose boom with central hydraulic system
	Consult factory for other engine options	Driver's side pickup
	Hydraulic curb nozzle attachment in lieu of suction hose	Fluid drive coupler in lieu of clutch and PTO

Maneuvering the hose boom is almost effortless because the boom is raised and lowered hydraulically using push button switches and the boom swivels side to side on two flange bearings

Engine controls are connected to Murphy PowerView display system designed to read and indicate engine data, fault codes and stored history. It has a 64 x 128 pixel backlit display for easy viewing of the many standard engine read outs.

The drive bearings assembly consists of two heavy duty four bolt flange bearings with double row, precision sherical roller bearings.

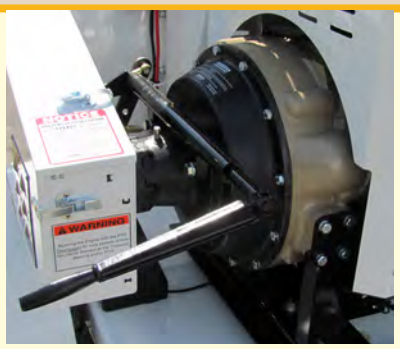

The PTO/Clutch is a heavy duty 13" automotive style assembly.

***Specifications subject to change at any time without notice, units may be shown with optional equipment and/or colors**

www.xtremevac.com

XV8027

Self Contained Belt Driven Leaf Collector

- **Kawasaki Gasoline Engine**
  27HP gasoline
- **Belt Driven**
  prolongs engine and PTO life
- **20” Diameter Impeller**
  incredible power
- **Dumping Box Container**
  10 cubic yard capacity

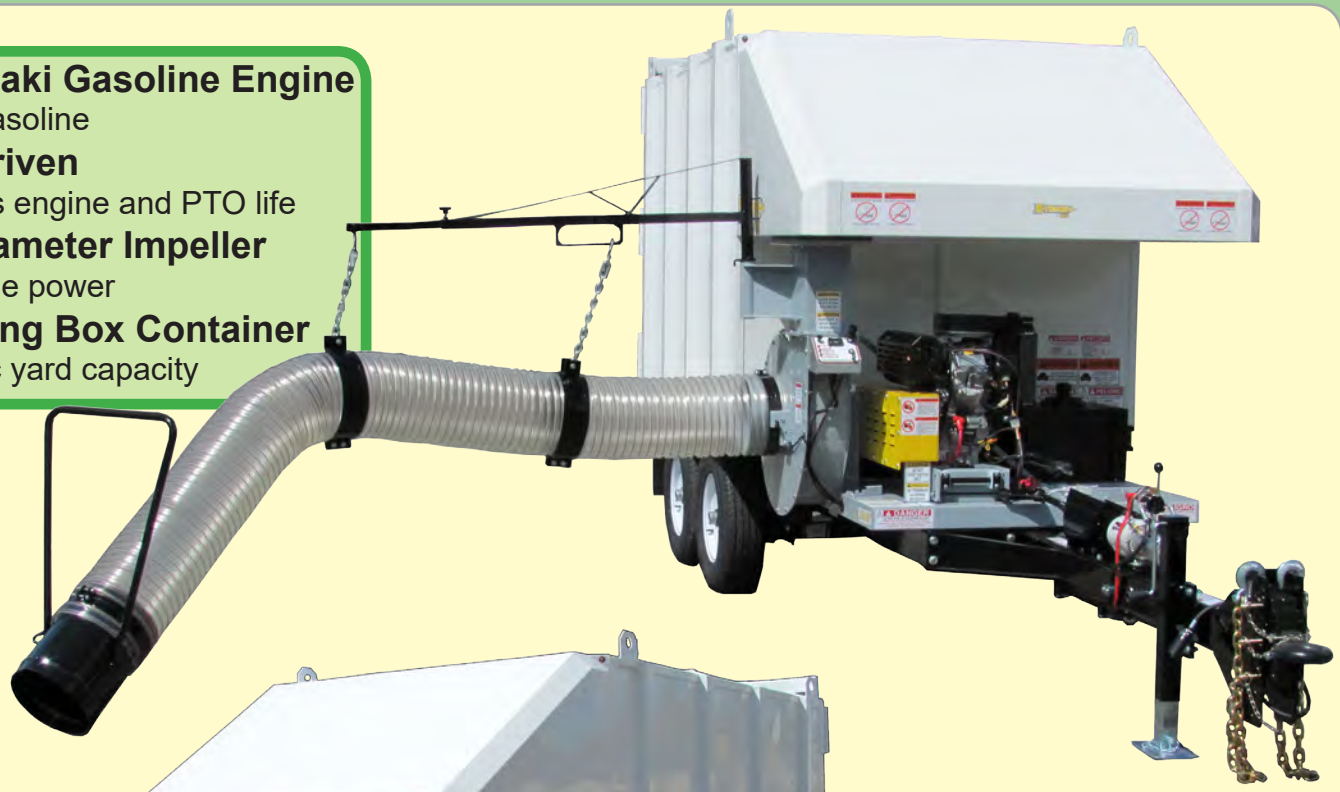

The Xtreme choice of professional landscapers and municipalities

*Equipment may be shown with add on options and colors.

www.xtremevac.com

XV8027 Self Contained Leaf Collector Basic Specifications

Engine	Kawasaki FD7500D 27HP water cooled gasoline engine.
Air Cleaner	Dry element with pre-cleaner.
Radiator	Pressurized, heavy duty.
Radiator Screen	Pull out screen.
Engine Controls	Mounted in clear view and reachable with ease inside a custom instrument panel. Controls and gauges include: throttle, choke, tachometer, hour meter and keyed ignition switch. Also included are indicator lights for battery charging, low oil pressure and high engine temperature.
Drive Type	Belt driven with 3 individual belts.
Trailer Chassis	Heavy duty channel steel, formed and welded. Chassis is consructed of 2” x 6” tubular steel with 1/4” wall thickness.
Dimensions & Wt.	108” wide x 76” wide x 190” long. Empty weight is 4,200 pounds.
Axles	Dual 3.5-inch high speed rubber Torflex towing axles rated at 6,000 pounds each with electric brakes
Tires	ST225-75R15 radials mounted on steel white spoke rims and EZ lube hubs.
Tow Tongue	Heavy duty 4” x 5” x 1/4” thick wall thickness with pintle eye hitch.
Pintle Hook	Heavy duty pintle eye that is height adjustable without the use of tools
Parking Jack	Heavy duty top wind jack with steel foot.
Trailer Lighting	LED type stop/turn signals as well as clearance light.
Impeller	20” diameter with 6 gusseted blades constructed of 3/8” thick abrasive resistant T-1 steel with a Brinell hardness exceeding 400. Each blade is gusseted on the back side and welded to a 1/4” thick backing plate. Impeller blades are flat with serrated tips for increased wear. Impeller is secured to the shaft via a taper locking bushing. The impeller is completely stress relieved via Bonal stress relief technology to eliminate weld cracking and weld distortion for the highest structural integrity possible. This makes for the strongest and longest lasting impeller on the market.
Impeller Shaft	1-1/2” diameter.
Impeller Bearings	Two 1-1/2” diameter double roller 4 bolt flange type bearings.
Impeller Engagement	Features a manually operated “slip belt” design. Operators have control of engaging/disengaging the impeller conveniently via a handle attached to a newly designed movable engine mount. The engine mount is spring-loaded slide with an over center cam that pulls the engine to the proper belt tension to engage the impeller.
Blower Housing	Outer housing is constructed of 11 gauge welded steel, front and back plates are 11-gauge steel. A safety kill switch is located on the face to shut down the engine if the intake hose is improperly attached.
Liners	Made of 3/16” thick steel and secured by 3/8” carriage bolts.
Suction Inlet	Located on curb side of unit, but unit can easily be remounted to pick up from the street side.
Intake Hose	12” diameter x 120” long. Heavy duty wire reinforced .070” thick flexible urethane hose Telescopic, manual operated hose boom which pivots easily on the boom socket for easy maneavability.
Hose Boom	Telescopic, manual operated hose boom which pivots easily on the boom socket for easy maneavability.
Hoist Hydraulics	Uses a double acting (power up/power down) electric/hydraulic pump which operates off of a 12-volt battery. The engine does not need to be on when dumping the unit.
Dumping Hoist	Uses a Crysteel scissor style hoist capable of dumping 24,000 pounds for the unit. The hoist dumps at a maximum 52 degrees.
Box Container	10 cubic yard self-dumping container constructed of 12-gauge steel with dual side-hinge doors which can be locked to the side when dumping.
Vented Top Screens	Two easily removable 1/2” expanded steel mesh screens are located on the top of the box container. These screens slide in a channel and bolt in place.
Fuel Tank	12 gallon capacity fuel tank manufactured of 3/16” thick roto-molded polyethylene.
Paint	All metal parts are thoroughly cleaned, primed, painted and dried separately. Each part is primed with a rust inhibitor primer and is painted with two coats of automotive quality paint. The parts are then assembled on the unit so that bolts, nuts, cables and grease fittings are not painted. Standard Hopper color is White. Engine, blower housing and mounting platform are battleship grey color. Trailer frame, tongue and underside of the hopper are black in color.

***Specifications subject to change at any time without notice, units may be shown with optional equipment and/or color**

The telescoping hose boom gives the operator the ablility to reach far into the ditches and hard to reach piles.

Engine controls and gauges include: tachometer, hour meter, throttle, choke and keyed ignition switch. Indicator lights for low oil pressure, high engine temperature and battery charging are included.

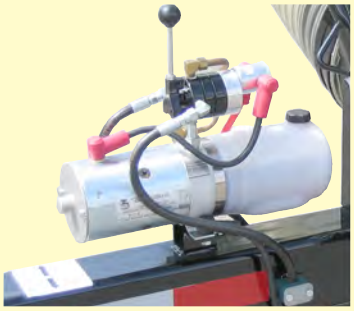

The hoist uses a double acting (power up/power down) electric over hydraulic pump.

Vented top screens are located on top of the unit for proper air flo . These screens are made of 1/2” expanded steel with mesh screen. They are easily removable and slide in and out on channels. (Unit shown with optional color)

The XV8027 uses two side hinge doors that open and close with ease using dual cam style lock rods. The cam style latches assure a strong, tight fit. The two doors can be locked to the side of the box for dumping.

041415

Sold and Serviced By:

XTREME VAC

www.xtremevac.com

800-632-7989

XV8031

Self Contained Belt Driven Leaf Collector

The Xtreme choice of professional landscapers and municipalities

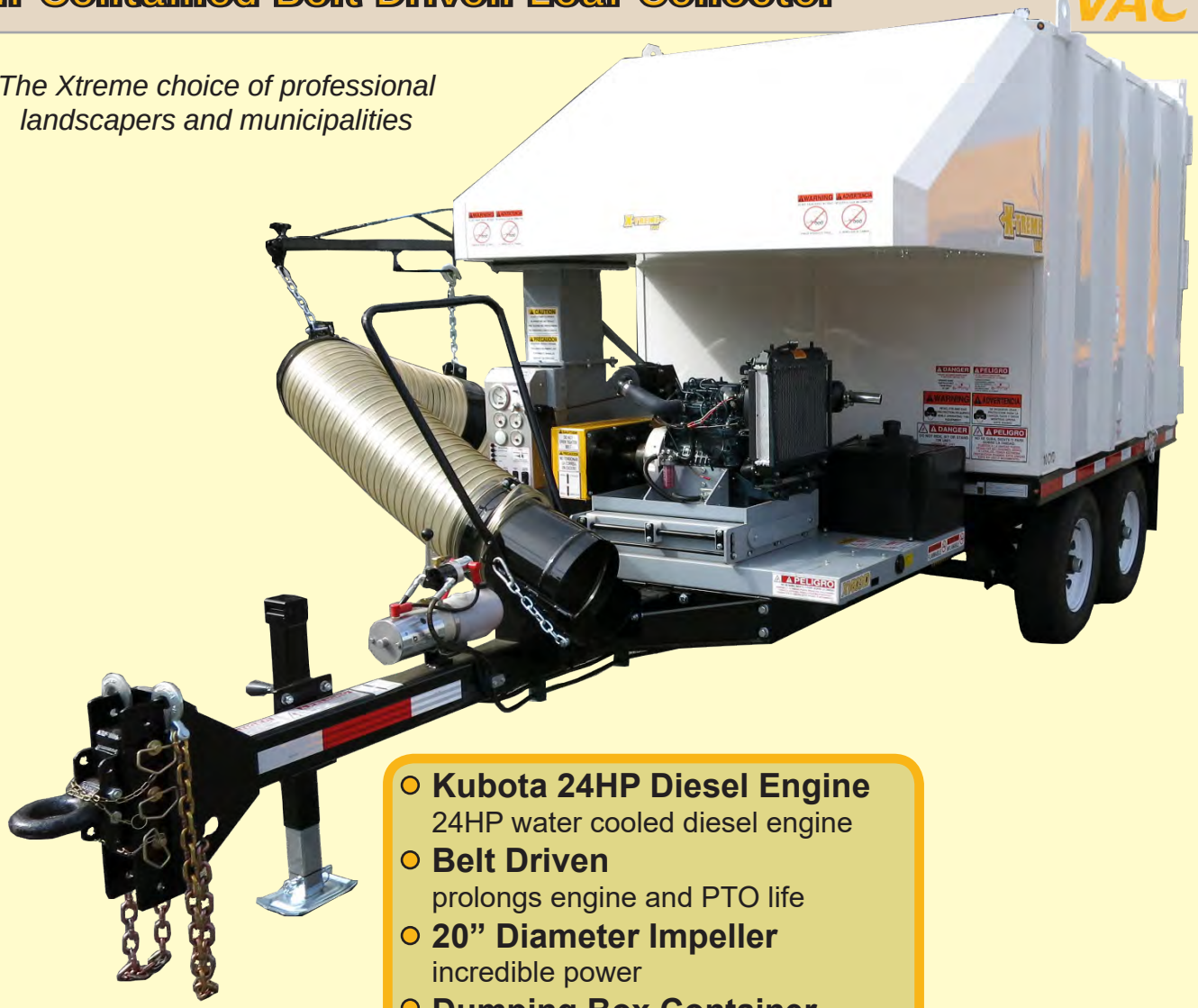

- **Kubota 24HP Diesel Engine**
  24HP water cooled diesel engine
- **Belt Driven**
  prolongs engine and PTO life
- **20” Diameter Impeller**
  incredible power
- **Dumping Box Container**
  10 cubic yard capacity

*Specifications subject to change at any time without notice, units may be shown with optional equipment and/or colors

www.xtremevac.com

XV8031 Self Contained Leaf Collector Basic Specifications

Engine	Kubota 24HP water cooled diesel engine.
Air Cleaner	Dry element with pre-cleaner.
Radiator	Pressurized, heavy duty.
Engine Controls	Mounted in clear view and reachable with ease inside a hinged instrument panel. All gauges and engine wiring are connected to a state-of-the-art circuit board, with circuit breakers, for easier and more reliable connections. Gauges include: Tachometer, hour meter, voltmeter and oil pressure gauge. All monitoring gauges have backlighting. Automatic safety shutdown for high temperature or low oil pressure.
Drive Type	Belt driven with 3 individual belts.
Trailer Chassis	Heavy duty channel steel, formed and welded. Chassis is consructed of 2” x 6” tubular steel with 1/4” wall thickness.
Dimensions & Wt.	108” tall x 76” wide x 190” long. Empty weight is 4,600 pounds.
Axles	Dual 3.5-inch high speed rubber Torflex towing axles rated at 6,000 pounds each with electric brakes
Tires	ST225-75R15 radials mounted on steel white spoke rims and EZ lube hubs.
Tow Tongue	Heavy duty 4” x 5” x 1/4” thick wall thickness with pintle eye hitch.
Pintle Hook	Heavy duty pintle eye that is height adjustable without the use of tools
Parking Jack	Heavy duty top wind jack with steel foot.
Trailer Lighting	LED type stop/turn signals as well as clearance light.
Impeller	20” diameter with 6 gusseted blades constructed of 3/8” thick abrasive resistant T-1 steel with a Brinell hardness exceeding 400. Each blade is gusseted on the back side and welded to a 1/4” thick backing plate. Impeller blades are flat with serrated tips for increased wear. Impeller is secured to the shaft via a taper locking bushing. The impeller is completely stress relieved via Bonal stress relief technology to eliminate weld cracking and weld distortion for the highest structural integrity possible. This makes for the strongest and longest lasting impeller on the market.
Impeller Shaft	1-1/2” diameter.
Impeller Bearings	Two 1-1/2” diameter double roller 4 bolt flange type bearings.
Impeller Engagement	Features a manually operated “slip belt” design. Operators have control of engaging/disengaging the impeller conveniently via a handle attached to a newly designed movable engine mount. The engine mount is spring-loaded slide with an over center cam that pulls the engine to the proper belt tension to engage the impeller.
Blower Housing	Outer housing is constructed of 11 gauge welded steel, front and back plates are 11-gauge steel. A safety kill switch is located on the face to shut down the engine if the intake hose is improperly attached.
Liners	Made of 3/16” thick steel and secured by 3/8” carriage bolts.
Suction Inlet	Located on curb side of unit, but unit can easily be remounted to pick up from the street side.
Intake Hose	12” diameter x 120” long. Heavy duty wire reinforced .070” thick flexible urethane hose Telescopic, manual operated hose boom which pivots easily on the boom socket for easy maneavability.
Hose Boom	Telescopic, manual operated hose boom which pivots easily on the boom socket for easy maneavability.
Hoist Hydraulics	Uses a double acting (power up/power down) electric/hydraulic pump which operates off of a 12-volt battery. The engine does not need to be on when dumping the unit.
Dumping Hoist	Uses a Crysteel scissor style hoist capable of dumping 24,000 pounds for the unit. The hoist dumps at a maximum 52 degrees.
Box Container	10 cubic yard self-dumping container constructed of 12-gauge steel with dual side-hinge doors which can be locked to the side when dumping.
Vented Top Screens	Two easily removable 1/2” expanded steel mesh screens are located on the top of the box container. These screens slide in a channel and bolt in place.
Fuel Tank	12 gallon capacity fuel tank manufactured of 3/16” thick roto-molded polyethylene.
Paint	All metal parts are thoroughly cleaned, primed, painted and dried separately. Each part is primed with a rust inhibitor primer and is painted with two coats of automotive quality paint. The parts are then assembled on the unit so that bolts, nuts, cables and grease fittings are not painted. Standard Hopper color is White. Engine, blower housing and mounting platform are battleship grey color. Trailer frame, tongue and underside of the hopper are black in color.

***Specifications subject to change at any time without notice, units may be shown with optional equipment and/or color**

The telescoping hose boom gives the operator the ablility to reach far into the ditches and hard to reach piles.

Hinged instrument panel allows easy access to the instrument wiring. All engine monitoring gauges are backlit for increased visibility. Gauges and controls include: throttle control, tachometer, hour meter, oil pressure, water temperature, volt meter and fuel gauge.

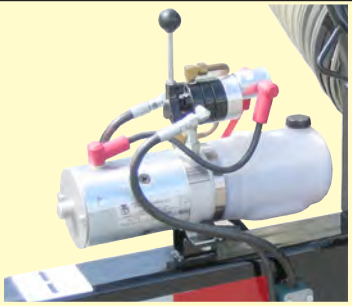

The hoist uses a double acting (power up/power down) electric over hydraulic pump.

Vented top screens are located on top of the unit for proper air flo . These screens are made of 1/2” expanded steel with mesh screen. They are easily removable and slide in and out on channels. (Unit shown with optional color)

The XV8031D uses two side hinge doors that open and close with ease using dual cam style lock rods. The cam style latches assure a strong, tight fit. The two doors can be locked to the side of the box for dumping.

512150

XTREME VAC

www.xtremevac.com

800-632-7989

ACCUBATCH®
brine maker

Cargill®

Cargill Deicing Technology
24950 Country Club Blvd. Suite 450
North Olmsted, OH 44070
phone: 866-900-SALT (7258)

www.cargilldeicing.com

©2014 Cargill, Incorporated. All rights reserved.

The information contained herein is believed to be true and accurate. However, all statements, recommendations or suggestions are made without guarantee, express or implied, on the part of Cargill. CARGILL DISCLAIMS ALL WARRANTIES, EXPRESS OR IMPLIED, INCLUDING BUT NOT LIMITED TO THE IMPLIED WARRANTIES OF MERCHANTABILITY, FITNESS FOR A PARTICULAR PURPOSE AND FREEDOM FROM INFRINGEMENT and disclaims all liability in connection with the installation and use of the product described herein. All such risks are assumed by the purchaser/user/installer. The information contained herein is not and should not be construed as a clearance or permission with respect to patent rights of Cargill or any third party and is subject to change without notice.

ABSS-1102 8/25/14

ACCUBATCH®
brine maker

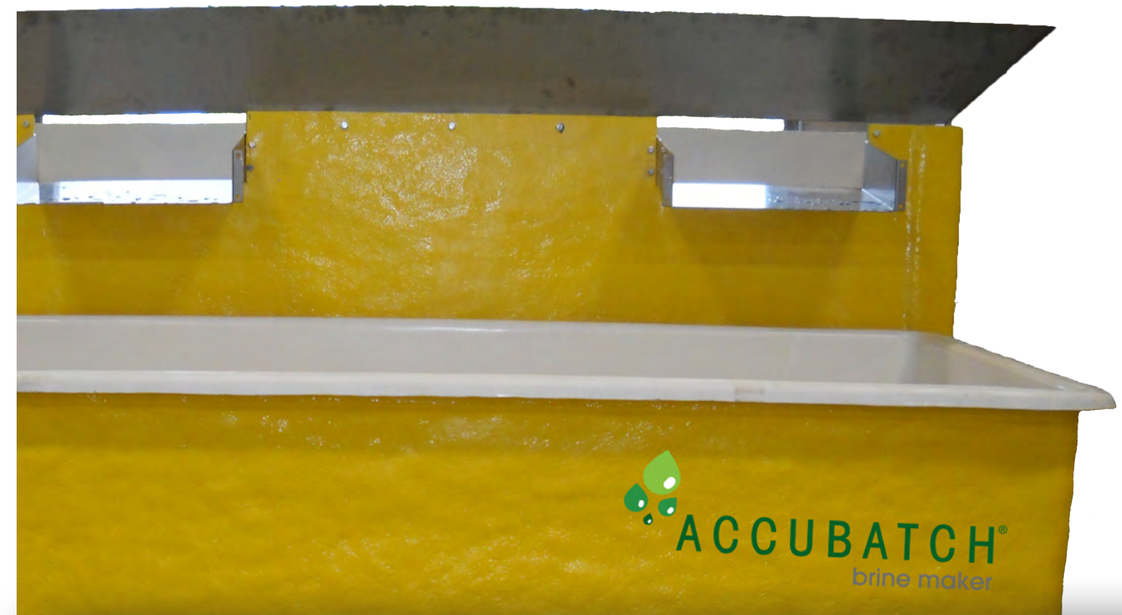

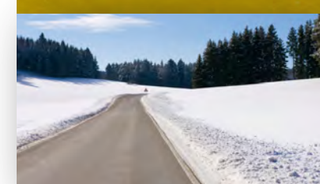

A SIMPLE WAY TO STAY SAFELY AHEAD OF THE STORM.

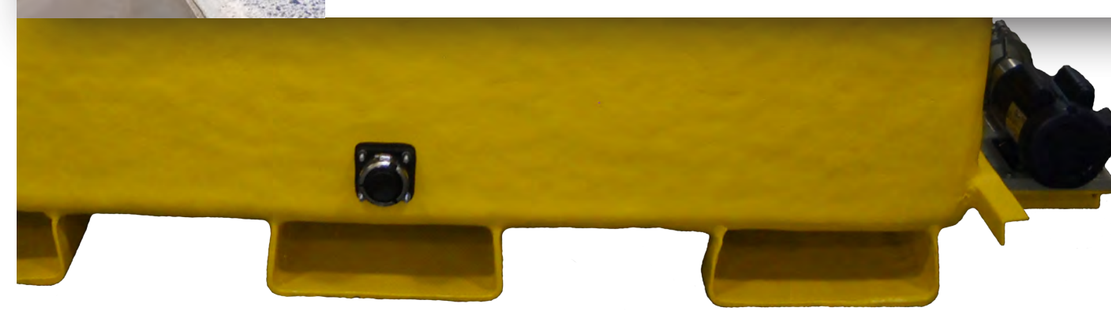

Cargill®

A Cargill Deicing Technology Product

Providing customers with deicing solutions that save lives, enhance commerce and reduce environmental impact.

START WITH THE BASICS – SIMPLE, ACCURATE AND COST-EFFECTIVE BRINE PRODUCTION.

As a highly effective and surprisingly economical solution for combating snow and ice issues on roadways, brine production has become a proven winter maintenance solution. With the release of the AccuBrine® automated brine maker, Cargill Deicing Technology introduced revolutionary technology to the brine making process – and we're ready to do it again with the AccuBatch® brine maker. The AccuBatch® brine maker provides everything you need to start up or recharge your anti-icing program and none of what you don't.

- **Consistently achieve ideal brine concentration via sensor that is only available with the AccuBatch® brine maker- no need to manually check.**
- **Simple plug & play design makes for easy setup and operation.**
- **Easy cleanout process that is quick and efficient.**

As your total solutions provider for all of your winter maintenance needs, we recognize the importance of presenting you with different options of brine making systems. Whether you are looking for the continuous flow design of our AccuBrine® automated brine maker or a smaller production capacity system like the AccuBatch® brine maker that allows you to make brine by the batch, we've got you covered.

ACCUBATCH®
brine maker

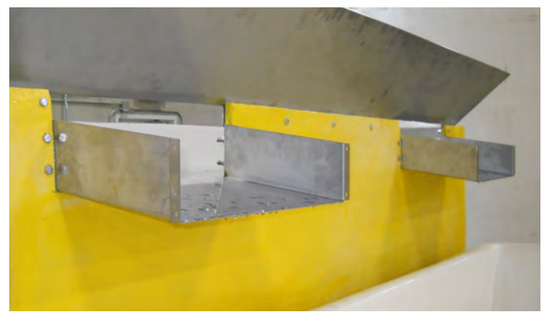

BUDGET-FRIENDLY BRINE PRODUCTION.

The decision to purchase a brine making system can be a very overwhelming task. With so many options to choose from and numerous factors to consider, finding the right fit takes time. Although cost-effective, many entry-level models lack the key features desired to make your brine easily, accurately and without hassle - until now.

AccuBatch® brine maker features:

- Automatic brine concentration measurement: This user-friendly brine concentration measurement allows customers to set acceptable concentration ranges and alarms. The system will automatically shut off once target brine concentration is achieved.

- Ease of cleanout: Normally a very labor intensive and costly process, cleaning out your AccuBatch® brine maker is fast and easy. Save valuable time and money by keeping your employees focused on their priorities - not the machine.

- Simple setup: The simple plug and play design is a semi-automated do-it-yourself operational system. Just hook up the water and power and begin making brine without the setup costs or the need for technical assistance.

- Production capacity: The AccuBatch® brine maker is capable of producing up to 800 gallons of brine per batch. Make what you need when you need it.

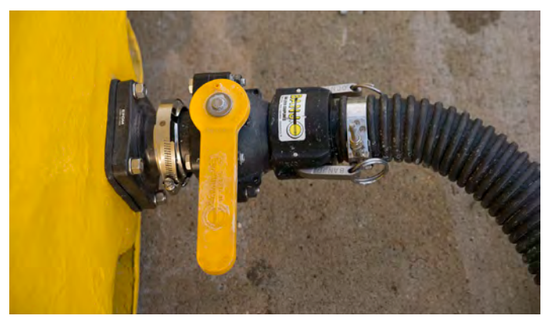

DON'T SACRIFICE YOUR NEEDS FOR COST. GET IT ALL IN ONE.

It's true that cost can have a major effect on your decision to purchase a brine maker, but it's not the only factor. According to an independent study conducted in 2011 of state government and municipality transportation staff, the following are what many consider to be important features when purchasing a brine maker:

Why choose the AccuBatch® brine maker?	AccuBatch® brine maker
Lower Cost *Entry level model*	✓
Automatically measure brine concentration *No need to babysit brine production*	✓
Easy Cleanout *Quick, easy and efficient*	✓
Plug and Play Design *Simple setup, no technical assistance needed*	✓
Ease of Operation *Simple procedures and machine controls*	✓
Durable *High-end materials at entry-level price*	✓

The AccuBatch® brine maker addresses each of these features with a simple design that allows you to produce your desired amount of brine accurately and efficiently without the need for additional manpower. Its conductivity sensor for accurate concentration and easy cleanout process are offered at a budget-friendly price. Storage is not an issue either as it can be stored outside with no heated structure required. With the AccuBatch® brine maker, there is no need to decide which of these features you can do without.

System Includes:

- Simple controls (on/off/alarms)
- Stainless steel pump
- Durable valves
- Quick disconnect fittings
- Automatic brine concentration measurement

ACCUBATCH®
brine maker

**spill deflector pictured is an optional add-on and does not come standard on the machine*

NJPA AWARDED CONTRACT

Cargill®

A Cargill Deicing Technology Product

Providing customers with deicing solutions that save lives, enhance commerce and reduce environmental impact.

ACCUBRINE®
automated brine maker

KEEP ROADS SAFER BY STAYING AHEAD OF THE STORM.

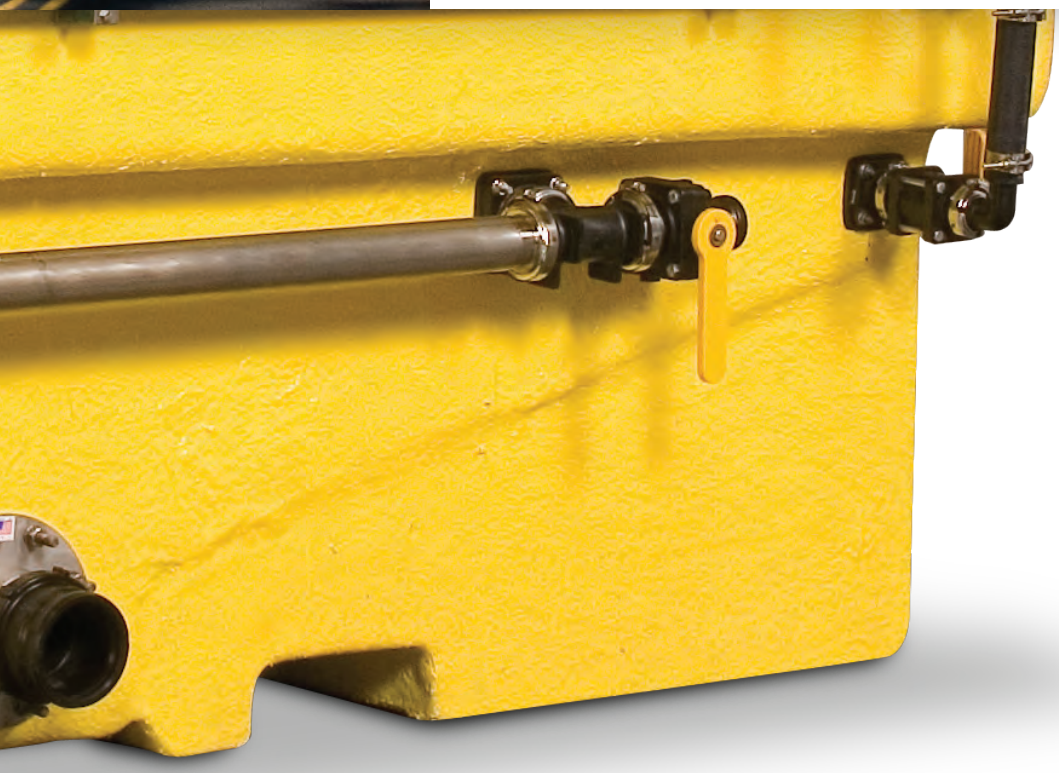

Cargill®
A Cargill Deicing Technology Product

Providing customers with deicing solutions that save lives, enhance commerce and reduce environmental impact.

BRINE PRODUCTION MADE SIMPLE, ON SPECIFICATION, AND ON BUDGET.

Brine, whether used to wet salt or as an anti-icer, is a highly effective and surprisingly economical solution for combating snow and ice issues on roadways. Now, Cargill Deicing Technology makes brine production more efficient and cost-effective than ever before with the ingenious AccuBrine® automated brine maker. All the benefits of brine use — with none of the typical production and supply headaches.

- **Consistently achieve ideal brine concentration.**
- **Easily create "customized blends" using brine with up to three liquid additives**

A CAPITAL INVESTMENT WITH A PAYBACK.

The best investments are those that pay for themselves. The AccuBrine® automated brine maker does exactly that. Municipalities and DOTs have found that costs are quickly recouped through reduced operational costs. What's more, the AccuBrine® automated brine maker is built to endure. Its low maintenance fiberglass construction is both reliable and durable.

AccuBrine® automatic brine maker features:

- Programmable Logic Controller: The PLC initiates the production process while a patented sensing system monitors salinity levels.
- Accurate Data Tracking: The PLC tracks daily and seasonal data including production volume, water, salt and additives usage, and operator hours.
- Modular system: Add Truck filling options and additive blending system easily and economically.

ACCUBRINE®
automated brine maker

System Includes:

- Salt tank
- Control panel
- 1 Level Sensor: Measures volume in brine storage tank.
- LAN Access: Connects the AccuBrine® to a customer's local network and allows for remote access for monitoring and operation.
- Air Purge: Automatically purges plumbing lines to help avoid freezing.
- Warning Beacon: Informs operator of system faults.
- Roll Tarp: Prevents debris from contaminating the salt tank.
- Compact physical footprint
- Dimensions:
  - Salt tank: 65.5"H x 125.5"W x 62.25"D
  - Control panel: 71"H x 33.5"W x 20"D

SIMPLE IMPROVEMENTS FOR GREATER BENEFITS.

By making some necessary upgrades from the original AccuBrine® automated brine maker model, users can expect a more user-friendly system with improved accuracy and efficiency. These features include:

- Redesigned operator interface screen layout and new PLC program provides a cleaner screen navigation that is easier to use
- Updated electrical components to replace outdated/obsolete electrical hardware and software with state of the art components
- Remote access that improves service and troubleshooting capabilities while reducing amount of time consuming on-site service calls
- Dilute valve replacement with proportional control valve for enhanced brine making efficiency
- Conductivity controller and sensor for improved accuracy and ease of calibration
- Improved tank level management logic for better truck loading accuracy

NJPA AWARDED CONTRACT

ACCUBRINE® blending system

As you continue to grow your anti-icing program, your AccuBrine® automated brine maker can easily expand to accommodate your needs. With the AccuBrine® blending system, you can create custom liquid blends of your choosing at the touch of a button.

Operating as a stand-alone unit to your current brine making system or as an add-on to your AccuBrine® automated brine maker, the AccuBrine® blending system enables you to produce any custom blend by mixing your brine with various other liquid additives to enhance performance and lower the effective melting temperature.

Using an in-line volume ratio blending method to fill your truck with customized brine blends accurately and quickly, the AccuBrine® blending system's modular design gives you the option to add up to three additives to blend with brine. The system also gives you the option to add tanker truck offload capabilities easily and economically. Finally, it eliminates the need to store blended product in storage tanks as a custom blend can be made in real time as it is being sent directly to a liquid application truck. Configured to meet your specific needs, the AccuBrine® blending system is the best way to achieve the custom blends you desire efficiently and effectively.

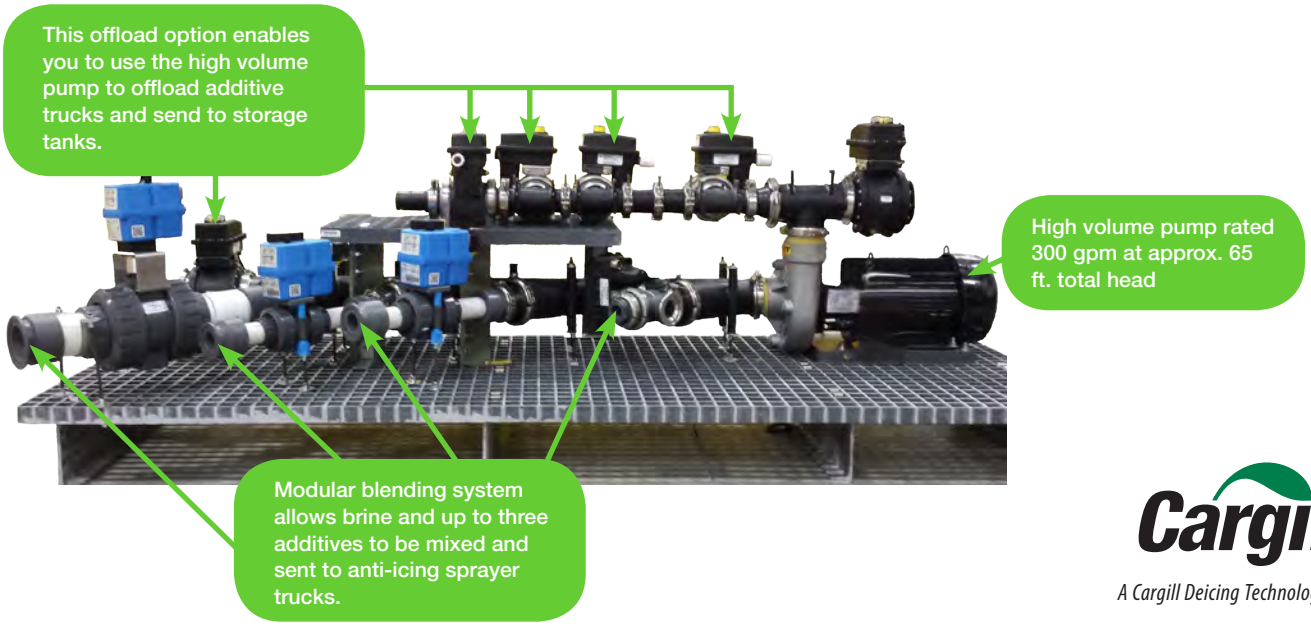

Cargill®

A Cargill Deicing Technology Product

Providing customers with deicing solutions that save lives, enhance commerce and reduce environmental impact.

ACCUBRINE®
automated brine maker

Cargill Deicing Technology
24950 Country Club Blvd. Suite 450
North Olmsted, OH 44070
phone: 866-900-SALT (7258)

www.cargilldeicing.com

©2015 Cargill, Incorporated. All rights reserved.

The information contained herein is believed to be true and accurate. However, all statements, recommendations or suggestions are made without guarantee, express or implied, on the part of Cargill. CARGILL DISCLAIMS ALL WARRANTIES, EXPRESS OR IMPLIED, INCLUDING BUT NOT LIMITED TO THE IMPLIED WARRANTIES OF MERCHANTABILITY, FITNESS FOR A PARTICULAR PURPOSE AND FREEDOM FROM INFRINGEMENT and disclaims all liability in connection with the installation and use of the product described herein. All such risks are assumed by the purchaser/user/installer. The information contained herein is not and should not be construed as a clearance or permission with respect to patent rights of Cargill or any third party and is subject to change without notice.

ABSS-1101 3/26/2015

State of Michigan Prosperity Regions

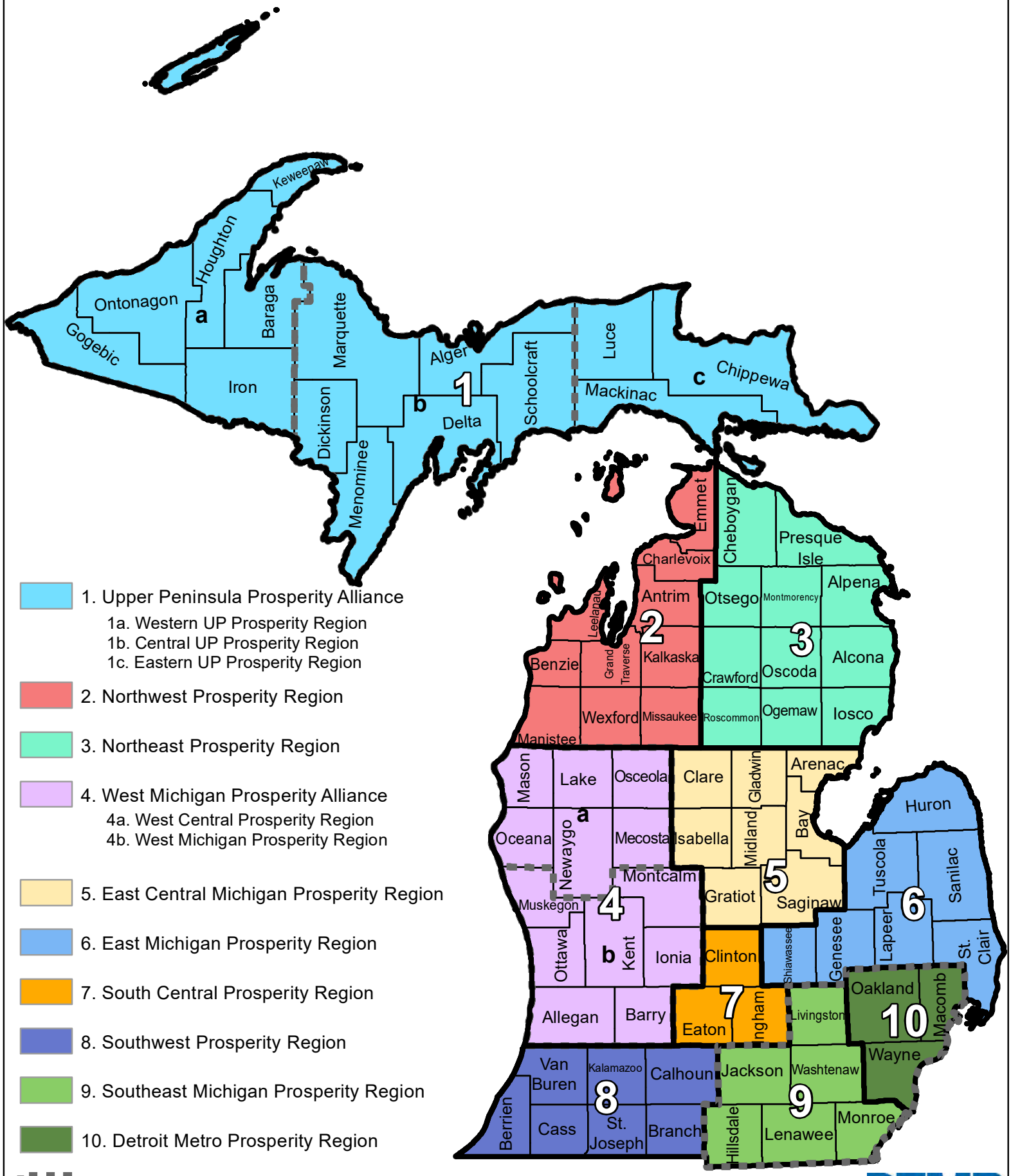

8/6/2013

DTMB Technology, Management & Budget

CONTRACT # 071B7700091 - AWARDED SPECIFICATIONS FOR PURCHASE				
Spec #	EQUIPMENT MAKE & MODEL:	EQUIPMENT CATEGORY	Quoted Price	Hourly rate for training (per Schedule A, Statement of Work, section A.,3.3)
22	C62-0051-16 Street Sweeper - Elgin/Autocar	Sweeper	$324,516.75	$100.00
NON-AWARDED SPECIFICATIONS FOR PURCHASE				
10	C36-0401-4T-16 Asphalt Heater-Hauler - Spaulding 4TLRMV	Asphalt Sealing	$19,600.00	$100.00
21	C60-2001-16 Sand-Salt Spreader - Epoke 4902	SPREADER	$109,784.00	$100.00

Catalog Pricing For PURCHASE

Epoke Spreaders

Item #	EQUIPMENT MAKE & MODEL:	EQUIPMENT CATEGORY	MSRP	% Discount Off MSRP	Discount	Set-Up Fees	Total Cost (With setup & delivery included)
	BULK SPREADERS						
1	Epoke 3800 SMALL	SPREADER	68,130.00	3%	$ 2,043.90	4,500.00	$ 70,586.10
2	Epoke 3800 MEDIUM	SPREADER	71,685.00	3%	$ 2,150.55	4,500.00	$ 74,034.45
3	Epoke 3800 LARGE	SPREADER	74,525.00	3%	$ 2,235.75	4,500.00	$ 76,789.25
4	Epoke 3800 2T SMALL	SPREADER	88,690.00	3%	$ 2,660.70	4,500.00	$ 90,529.30
5	Epoke 3800 2T MEDIUM	SPREADER	92,245.00	3%	$ 2,767.35	4,500.00	$ 93,977.65
6	Epoke 3800 2T LARGE	SPREADER	95,085.00	3%	$ 2,852.55	4,500.00	$ 96,732.45
7	Epoke 4900 SMALL	SPREADER	72,280.00	3%	$ 2,168.40	4,500.00	$ 74,611.60
8	Epoke 4900 MEDIUM	SPREADER	75,415.00	3%	$ 2,262.45	4,500.00	$ 77,652.55
9	Epoke 4900 LARGE	SPREADER	76,905.00	3%	$ 2,307.15	4,500.00	$ 79,097.85
10	Epoke 4902 SMALL	SPREADER	84,550.00	3%	$ 2,536.50	4,500.00	$ 86,513.50
11	Epoke 4902 MEDIUM	SPREADER	87,685.00	3%	$ 2,630.55	4,500.00	$ 89,554.45
12	Epoke 4902 LARGE	SPREADER	89,175.00	3%	$ 2,675.25	4,500.00	$ 90,999.75
13	Epoke Virtus 1,980 Gallon	SPREADER	97,710.00	3%	$ 2,931.30	6,500.00	$ 101,278.70
14	Epoke Virtus 2,640 Gallon	SPREADER	102,260.00	3%	$ 3,067.80	6,500.00	$ 105,692.20
15	Epoke Virtus 3,300 Gallon	SPREADER	106,810.00	3%	$ 3,204.30	6,500.00	$ 110,105.70
16	Epoke Virtus 4,000 Gallon	SPREADER	111,360.00	3%	$ 3,340.80	6,500.00	$ 114,519.20
17	Epoke Virtus 4,600 Gallon	SPREADER	117,555.00	3%	$ 3,526.65	6,500.00	$ 120,528.35
18	Epoke Virtus AST Kit	SPREADER	49,625.00	3%	$ 1,488.75	6,500.00	$ 54,636.25
19	Epoke Virtus City AST Kit	SPREADER	60,180.00	3%	$ 1,805.40	6,500.00	$ 64,874.60
20	Epoke Igloo 2300 - 1.0 Yard	SPREADER	20,845.00	3%	$ 625.35	6,500.00	$ 26,719.65
21	Epoke Igloo 2300 - 1.4 Yard	SPREADER	22,180.00	3%	$ 665.40	4,500.00	$ 26,014.60
22	Epoke Igloo 2300 - 1.8 Yard	SPREADER	23,520.00	3%	$ 705.60	4,500.00	$ 27,314.40
23	Epoke Igloo 2400 - .8 Yard	SPREADER	27,785.00	3%	$ 833.55	4,500.00	$ 31,451.45
24	Epoke Igloo 2400 - 1.0 Yard	SPREADER	29,140.00	3%	$ 874.20	4,500.00	$ 32,765.80
25	Epoke Igloo 2400 - 1.4 Yard	SPREADER	30,475.00	3%	$ 914.25	4,500.00	$ 34,060.75
26	Epoke Igloo 2400 - 1.8 Yard	SPREADER	31,825.00	3%	$ 954.75	4,500.00	$ 35,370.25
	TOWED SPREADERS						
27	Epoke Mini 5	SPREADER	1,360.00	5%	$ 68.00	$0.00	$ 1,292.00
28	Epoke Mini 20	SPREADER	3,170.00	5%	$ 158.50	$0.00	$ 3,011.50
29	Epoke ITM35	SPREADER	5,575.00	5%	$ 278.75	$0.00	$ 5,296.25
30	Epoke ITM45	SPREADER	8,020.00	5%	$ 401.00	$0.00	$ 7,619.00
31	Epoke ITM60	SPREADER	8,370.00	5%	$ 418.50	$0.00	$ 7,951.50
32	Epoke PM1.4	SPREADER	5,940.00	5%	$ 297.00	$0.00	$ 5,643.00
33	Epoke PMH1.4	SPREADER	5,185.00	5%	$ 259.25	$0.00	$ 4,925.75
34	Epoke SKE8	SPREADER	17,135.00	5%	$ 856.75	$0.00	$ 16,278.25
35	Epoke SKE15	SPREADER	22,810.00	5%	$ 1,140.50	$0.00	$ 21,669.50
36	Epoke SKE20	SPREADER	24,670.00	5%	$ 1,233.50	$0.00	$ 23,436.50
37	Epoke TKB12-280	SPREADER	22,375.00	5%	$ 1,118.75	$0.00	$ 21,256.25
38	Epoke TMK10-275	SPREADER	19,175.00	5%	$ 958.75	$0.00	$ 18,216.25

39	Epoke PSL 6.5	SPREADER	11,590.00	5%	$ 579.50	$0.00	$ 11,010.50
40	Epoke TP3	SPREADER	29,275.00	5%	$ 1,463.75	$0.00	$ 27,811.25
41	Epoke TP9	SPREADER	33,895.00	5%	$ 1,694.75	$0.00	$ 32,200.25

NOTES:

1. Price is for base unit only. See Schedule C1 for Epoke brochures.

2. Prices do not include any option content. See Schedule E2 for Epoke option pricing. All option pricing is subject to the 3% and 5% discount.

3. Set-Up Fees are for mounting and installation on customer supplied chassis, where applicable.

Elgin Sweepers

Item #	EQUIPMENT MAKE & MODEL:	EQUIPMENT CATEGORY	MSRP	% Discount Off MSRP	Discount	Set-Up Fees	Total Cost (With setup & delivery included)
42	Elgin Pelican - Single	SWEEPER	184,310.00	3%	$ 5,529.30	NA	$ 178,780.70
43	Elgin Pelican - Dual	SWEEPER	194,810.00	3%	$ 5,844.30	NA	$ 188,965.70
44	Elgin Waterless Pelican	SWEEPER	234,580.00	3%	$ 7,037.40	included	$ 227,542.60
45	Elgin Broom Bear	SWEEPER	143,810.00	3%	$ 4,314.30	included	$ 139,495.70
46	Elgin Road Wizard	SWEEPER	172,810.00	3%	$ 5,184.30	included	$ 167,625.70
47	Elgin Broom Badger	SWEEPER	129,940.00	3%	$ 3,898.20	included	$ 126,041.80
48	Elgin Eagle	SWEEPER	166,395.00	3%	$ 4,991.85	included	$ 161,403.15
49	Elgin Waterless Eagle	SWEEPER	196,685.00	3%	$ 5,900.55	included	$ 190,784.45
50	Elgin Whirlwind - Single	SWEEPER	151,435.00	3%	$ 4,543.05	included	$ 146,891.95
51	Elgin Whirlwind - Dual	SWEEPER	164,810.00	3%	$ 4,944.30	included	$ 159,865.70
52	Elgin Crosswind	SWEEPER	118,560.00	3%	$ 3,556.80	included	$ 115,003.20
53	Elgin Megawind, 10CY, CB Cleaner Only*	SWEEPER	144,810.00	3%	$ 4,344.30	included	$ 140,465.70
54	Elgin Megawind, 10CY - Single*	SWEEPER	168,935.00	3%	$ 5,068.05	included	$ 163,866.95
55	Elgin Megawind, 10CY - Dual*	SWEEPER	184,435.00	3%	$ 5,533.05	included	$ 178,901.95
56	Elgin Megawind, 13CY, CB Cleaner Only*	SWEEPER	150,935.00	3%	$ 4,528.05	included	$ 146,406.95
57	Elgin Megawind, 13CY - Single*	SWEEPER	175,060.00	3%	$ 5,251.80	included	$ 169,808.20
58	Elgin Megawind, 13CY - Dual*	SWEEPER	191,810.00	3%	$ 5,754.30	included	$ 186,055.70

NOTES:

1. Price is for sweeper module only. Does not include truck chassis, if applicable. See Schedule C2 for Elgin brochures.

2. Prices do not include any option content. See Schedule E3 for Elgin option pricing. All option pricing is subject to the 3% discount.

Spaulding Asphalt Equipment

Item #	EQUIPMENT MAKE & MODEL:	EQUIPMENT CATEGORY	Discount Pricing	Set-Up Fees	Total Cost (With setup & delivery included)
59	Spaulding Model 1TRS-LRMV-1 1 Ton Trailer	Asphalt Sealing	15,500.00	NA	$ 15,500.00
60	Spaulding Model 2TRS-LRMV-2 2 Ton Trailer	Asphalt Sealing	16,280.00	NA	$ 16,280.00
61	Spaulding Model 3TRS-LRMV-3 3 Ton Trailer	Asphalt Sealing	19,550.00	NA	$ 19,550.00
62	Spaulding Model 4TRS-LRMV-4 4 Ton Trailer	Asphalt Sealing	20,550.00	NA	$ 20,550.00
63	Spaudling Model 6TRS-LRMV-6 6 Ton Trailer	Asphalt Sealing	46,250.00	NA	$ 46,250.00
64	Spaulding Model 110MKS 100 Gallon Crack Sealer	Asphalt Sealing	31,972.50	NA	$ 31,972.50
65	Spaulding Oil Jacketed 125 Gallon Crack Sealer	Asphalt Sealing	55,000.00	NA	$ 55,000.00
66	Spaulding Oil Jacketed 225 Gallon Crack Sealer	Asphalt Sealing	58,000.00	NA	$ 58,000.00

NOTES:

1. Pricing is for base unit only and does not include any option content. See Schedule E4 for Spaulding option pricing. See Schedule C3 for Spaulding brochures.

Addco Equipment

Item #	EQUIPMENT MAKE & MODEL:	EQUIPMENT CATEGORY	Discount Pricing	Set-Up Fees	Total Cost (With setup & delivery included)
67	Addco PTS-2000 Portable Traffic Signal System	Portable Traffic Signal	74,100.00	NA	$74,100.00
68	Addco DH-1000 Portable Changeable Message Sign	Portable Sign	19,000.00	NA	$19,000.00
	OPTIONS				
69	Doppler radar motion sensors (TC26B) (PTS-2000 only)		2,400.00	Included	$2,400.00
70	GPS monitoring system (PTS-2000 only)		1,400.00	Included	$1,400.00
71	Yearly monitoring fee for GPS system (PTS-2000 only)		400.00	Included	$400.00

NOTES:

1. See Schedule C4 for Addco brochures.

Heil Construction Equipment

Item #	EQUIPMENT MAKE & MODEL:	EQUIPMENT CATEGORY	MSRP	% Discount Off MSRP	Discount	Set-Up Fees	Total Cost (With setup & delivery included)
72	Heil Half Pack Commercial Front Loader - 28CY		109,491.00	3%	$ 3,284.73	Included	$ 106,206.27
73	Heil Half Pack Commercial Front Loader - 32CY		112,766.00	3%	$ 3,382.98	Included	$ 109,383.02
74	Heil Half Pack Odyssey Residential FL - 20CY		126,035.00	3%	$ 3,781.05	Included	$ 122,253.95
75	Heil Half Pack Odyssey Residential FL - 23CY		125,525.00	3%	$ 3,765.75	Included	$ 121,759.25
76	Heil Half Pack Odyssey Residential FL - 28CY		126,135.00	3%	$ 3,784.05	Included	$ 122,350.95
77	Heil Half Pack Odyssey Commercial FL - 28CY		120,329.00	3%	$ 3,609.87	Included	$ 116,719.13
78	Heil Half Pack Odyssey Commercial FL - 32CY		123,604.00	3%	$ 3,708.12	Included	$ 119,895.88
79	Heil PT1000 Rear Loader - 13CY		51,316.00	3%	$ 1,539.48	Included	$ 49,776.52
80	Heil PT1000 Rear Loader - 16CY		53,009.00	3%	$ 1,590.27	Included	$ 51,418.73
81	Heil PT1000 Rear Loader - 18CY		54,432.00	3%	$ 1,632.96	Included	$ 52,799.04
82	Heil PT1000 Rear Loader - 20CY		56,110.00	3%	$ 1,683.30	Included	$ 54,426.70
83	Heil PT1000 Rear Loader - 25CY		59,267.00	3%	$ 1,778.01	Included	$ 57,488.99
84	Heil DP5000 Rear Loader - 18CY		60,369.00	3%	$ 1,811.07	Included	$ 58,557.93
85	Heil DP5000 Rear Loader - 20CY		61,914.00	3%	$ 1,857.42	Included	$ 60,056.58
86	Heil DP5000 Rear Loader - 25CY		64,994.00	3%	$ 1,949.82	Included	$ 63,044.18
87	Heil DP5000 Rear Loader - 27CY		66,524.00	3%	$ 1,995.72	Included	$ 64,528.28
88	Heil DP5000 Rear Loader - 32CY		69,361.00	3%	$ 2,080.83	Included	$ 67,280.17
89	Heil PT Commercial Rear Loader - 25CY		72,545.00	3%	$ 2,176.35	Included	$ 70,368.65
90	Heil PT Commercial Rear Loader - 27CY		74,075.00	3%	$ 2,222.25	Included	$ 71,852.75
91	Heil PT Commercial Rear Loader - 32CY		76,903.00	3%	$ 2,307.09	Included	$ 74,595.91
92	Heil PT Commercial Plus Rear Loader - 25CY		88,055.00	3%	$ 2,641.65	Included	$ 85,413.35
93	Heil PT Commercial Plus Rear Loader - 27CY		89,585.00	3%	$ 2,687.55	Included	$ 86,897.45
94	Heil PT Commercial Plus Rear Loader - 32CY		91,115.00	3%	$ 2,733.45	Included	$ 88,381.55
95	Heil Rapid Rail Automated Side Loader - 16CY		105,131.00	3%	$ 3,153.93	Included	$ 101,977.07
96	Heil Rapid Rail Automated Side Loader - 20CY		107,120.00	3%	$ 3,213.60	Included	$ 103,906.40
97	Heil Rapid Rail Automated Side Loader - 22CY		108,110.00	3%	$ 3,243.30	Included	$ 104,866.70
98	Heil Rapid Rail Automated Side Loader - 24CY		109,109.00	3%	$ 3,273.27	Included	$ 105,835.73
99	Heil Rapid Rail Automated Side Loader - 26CY		110,114.00	3%	$ 3,303.42	Included	$ 106,810.58
100	Heil Rapid Rail Automated Side Loader - 30CY		112,093.00	3%	$ 3,362.79	Included	$ 108,730.21
101	Heil Rapid Rail Automated Side Loader - 32CY		114,276.00	3%	$ 3,428.28	Included	$ 110,847.72
102	Heil DP Rapid Rail Automated Side Loader - 22CY		123,420.00	3%	$ 3,702.60	Included	$ 119,717.40
103	Heil DP Rapid Rail Automated Side Loader - 24CY		124,440.00	3%	$ 3,733.20	Included	$ 120,706.80
104	Heil DP Rapid Rail Automated Side Loader - 26CY		126,480.00	3%	$ 3,794.40	Included	$ 122,685.60
105	Heil DP Rapid Rail Automated Side Loader - 28CY		127,500.00	3%	$ 3,825.00	Included	$ 123,675.00
106	Heil DP Rapid Rail Automated Side Loader - 33CY		130,560.00	3%	$ 3,916.80	Included	$ 126,643.20
107	Heil DP Python Automated Side Loader - 22CY		117,122.00	3%	$ 3,513.66	Included	$ 113,608.34
108	Heil DP Python Automated Side Loader - 24CY		118,157.00	3%	$ 3,544.71	Included	$ 114,612.29

109	Heil DP Pyhton Automated Side Loader - 26CY		120,197.00	3%	$ 3,605.91	Included	$ 116,591.09
110	Heil DP Python Automated Side Loader - 28CY		121,277.00	3%	$ 3,638.31	Included	$ 117,638.69
111	Heil DP Python Automated Side Loader - 33CY		124,287.00	3%	$ 3,728.61	Included	$ 120,558.39
112	Heil Multi Pack Automated Side/Rear Loader - -24CY		154,752.00	3%	$ 4,642.56	Included	$ 150,109.44
113	Heil DP 4060 Split Rear Loader - 25CY		171,146.00	3%	$ 5,134.38	Included	$ 166,011.62
114	Heil Retriever Side Loader - 6CY		45,635.00	3%	$ 1,369.05	Included	$ 44,265.95
115	Heil Retriever Side Loader - 10CY		50,918.00	3%	$ 1,527.54	Included	$ 49,390.46
116	Heil Mini Rear Loader - 9CY		40,825.00	3%	$ 1,224.75	Included	$ 39,600.25
117	Heil Mini Rear Loader - 11CY		43,140.00	3%	$ 1,294.20	Included	$ 41,845.80
118	Heil Mini Rear Loader - 13CY		45,050.00	3%	$ 1,351.50	Included	$ 43,698.50
119	Heil Kwiklift Roll Off Hoist - 22'		31,658.00	3%	$ 949.74	Included	$ 30,708.26
120	Heil Kwiklift Roll Off Hoist - 24'		32,315.00	3%	$ 969.45	Included	$ 31,345.55
121	Heil Lowlift Roll Off Hoist - 22'		34,507.00	3%	$ 1,035.21	Included	$ 33,471.79
122	Heil Lowlift Roll Off Hoist - 24'		35,163.00	3%	$ 1,054.89	Included	$ 34,108.11

NOTES:

1. *Prices do not include truck chassis.*
2. *Prices are for base body only and do not include any option content or mounting costs. See* ***Schedule E5*** *for Heil option and mounting/installation costs. All options are subject to the 3% discount.*
3. *See Schedule C5 for Heil brochures.*

Envirosight Inspection Cameras

Item #	EQUIPMENT MAKE & MODEL:	EQUIPMENT CATEGORY	MSRP	% Discount Off MSRP	Discount	Set-Up Fees	Total Cost (With setup & delivery included)
123	Envirosight Rovver X Truck Basic		70,720.00	2%	$ 1,414.40	NA	$ 69,305.60
124	Envirosight Rovver X Truck Basic 500		91,520.00	2%	$ 1,830.40	NA	$ 89,689.60
125	Envirosight Rovver X Truck PRO		79,040.00	2%	$ 1,580.80	NA	$ 77,459.20
126	Envirosight Rovver X Truck PRO 500		98,800.00	2%	$ 1,976.00	NA	$ 96,824.00
127	Envirosight Super Vision SAT		145,600.00	2%	$ 2,912.00	NA	$ 142,688.00
128	Envirosight Verisight PRO Push Camera - 200		9,952.80	2%	$ 199.06	NA	$ 9,753.74
129	Envirosight Verisight PRO Push Camera - 330		10,612.16	2%	$ 212.24	NA	$ 10,399.92
130	Envirosight QuickView Haloptic - 16		15,600.00	2%	$ 312.00	NA	$ 15,288.00
131	Envirosight QuickView Haloptic - 24		15,600.00	2%	$ 312.00	NA	$ 15,288.00
132	Envirosight QuickView Haloptic - 30		17,160.00	2%	$ 343.20	NA	$ 16,816.80
133	Envirosight JetScan HD Video Nozzle		13,260.00	2%	$ 265.20	NA	$ 12,994.80

NOTES:

1. *Prices do not include any option content. See* ***Schedule E6*** *for Envirosight option pricing. All option pricing is subject to the 2% discount.*
2. *See Schedule C6 for Envirosight brochures.*

Trackless Municipal Tractor

Item #	EQUIPMENT MAKE & MODEL:	EQUIPMENT CATEGORY	MSRP	% Discount Off MSRP	Discount	Set-Up Fees	Total Cost (With setup & delivery included)
134	Trackless Series MT7 Articulated Tractor		121,325.00	5%	$ 6,066.25	Included	$ 115,258.75

NOTES:

1. *Price is for tractor only and does not include any option content. See* ***Schedule E7*** *for Trackless option pricing. All options are subject to the 5% discount.*
2. *See Schedule C7 for Trackless brochures.*

ODB Xtreme Vac

Item #	EQUIPMENT MAKE & MODEL:	EQUIPMENT CATEGORY	MSRP	% Discount Off MSRP	Discount	Set-Up Fees	Total Cost (With setup & delivery included)
135	Xtreme Vac LCT65 - John Deere 74HP Tier 4 Final		32,000.00	7%	$ 2,240.00	$0.00	$ 29,760.00
136	Xtreme Vac XV600 - John Deere 74HP Tier 4 Final		34,500.00	7%	$ 2,415.00	$0.00	$ 32,085.00
137	Xtreme Vac XV6000 - John Deere 99HP Tier 4 Final		53,400.00	7%	$ 3,738.00	$0.00	$ 49,662.00
138	Xtreme Vac XV8027 - 10 Cubic Yard		22,400.00	7%	$ 1,568.00	$0.00	$ 20,832.00
139	Xtreme Vac XV8031D - 10 Cubic Yard		26,600.00	7%	$ 1,862.00	$0.00	$ 24,738.00
140	Xtreme Vac SCL65TM14 - 14 Cubic Yard, John Deere 74HP Tier 4 Final		49,700.00	7%	$ 3,479.00	$0.00	$ 46,221.00
141	Xtreme Vac SCL65TM20 - 20 Cubic Yard, John Deere 74HP Tier 4 Final		52,400.00	7%	$ 3,668.00	$0.00	$ 48,732.00
142	Xtreme Vac SCL65TM25 - 25 Cubic Yard, John Deere 74HP Tier 4 Final		55,800.00	7%	$ 3,906.00	$0.00	$ 51,894.00
143	Xtreme Vac SCL65TM30 - 30 Cubic Yard, John Deere 74HP Tier 4 Final		57,000.00	7%	$ 3,990.00	$0.00	$ 53,010.00
144	Xtreme Vac SCL65SM14 - 14 Cubic Yard, John Deere 74HP Tier 4 Final		49,700.00	7%	$ 3,479.00	$0.00	$ 46,221.00
145	Xtreme Vac SCL65SM20 - 20 Cubic Yard, John Deere 74HP Tier 4 Final		52,400.00	7%	$ 3,668.00	$0.00	$ 48,732.00
146	Xtreme Vac SCL65SM25 - 25 Cubic Yard, John Deere 74HP Tier 4 Final		55,800.00	7%	$ 3,906.00	$0.00	$ 51,894.00
147	Xtreme Vac SCL65SM30 - 30 Cubic Yard, John Deere 74HP Tier 4 Final		57,000.00	7%	$ 3,990.00	$0.00	$ 53,010.00

NOTES:

1. *Price is for debris collector only. Price does not include truck chassis, if applicable.*
2. *Prices do not include any option content. See* ***Schedule E8*** *for ODB option pricing. All options are subject to the 7% discount.*
3. *See Schedule C8 for ODB brochures.*

Cargill Brine Making

Item #	EQUIPMENT MAKE & MODEL:	EQUIPMENT CATEGORY	Discount Pricing	Set-Up Fees	Total Cost (With setup & delivery included)
148	Accurbrine NXT	Brine Making	56,000.00	4,500.00	60,500.00
149	Accubrine NXT with Truck Fill	Brine Making	76,300.00	4,500.00	80,800.00
150	Accubrine NXT with Truck Fill & 1 Additive	Brine Making	87,600.00	4,500.00	92,100.00
151	Accubrine NXT with Truck Fill & 2 Additives	Brine Making	94,800.00	4,500.00	99,300.00
152	Accurbrine NXT with Truck Fill & 3 Additives	Brine Making	101,900.00	4,500.00	106,400.00
153	Stand Alone Truck Fill	Brine Making	50,900.00	4,500.00	55,400.00
154	Stand Alone Truck Fill & 1 Additive	Brine Making	57,000.00	4,500.00	61,500.00
155	Stand Alone Truck Fill & 2 Additives	Brine Making	63,100.00	4,500.00	67,600.00
156	Stand Alone Truck Fill & 3 Additives	Brine Making	69,300.00	4,500.00	73,800.00
157	Accubatch	Brine Making	28,700.00	4,500.00	33,200.00

NOTES:

1. *All pricing is for base unit only and does not include any option content. See* ***Schedule E9*** *for Cargill option pricing.*
2. *See Schedule C9 for Cargill brochures.*
3. *Set-up fees are for brine maker installation and hook-up, if applicable. Customer reserves the right to provide their own installation and hook-up.*

CONTRACT # 071B7700091 - AWARDED SPECIFICATIONS FOR RENTAL							DELIVERY - Lump sum cost per region (Per Schedule D, Prosperity Regional Map)												
Spec #	EQUIPMENT MAKE & MODEL:	EQUIPMENT CATEGORY	Quoted Daily Rental	Quoted Weekly Rental	Quoted Monthly Rental	Hourly rate for training (per Schedule A, Statement of Work, section A.,3.3)	1a. Western UP	1b. Central UP	1c. Eastern UP	2. Northwest	3. Northeast	4a. West Central	4b. West Michigan	5. East Central	6. East	7. South Central	8. Southwest	9. Southeast	10. Detroit Metro
21	C60-2001-16 Sand-Salt Spreader - Epoke 3800	SPREADER	NA	NA	$4,900.00	$100.00	$1,500	$1,250	$1,000	$750	$750	$500	$500	$500	$500	$500	$500	$300	$300
22	C62-0051-16 Street Sweeper - Elgin/Autocar	Sweeper	$1,300.00	$3,850.00	$10,780.00	$100.00	$1,500	$1,250	$1,000	$750	$750	$500	$500	$500	$500	$500	$500	$300	$300
NON-AWARDED SPECIFICATIONS FOR RENTAL																			
10	C36-0401-4T-16 Asphalt Heater-Hauler - Spaulding 4TLRMV	Asphalt Sealing	NA	$1,500.00	$5,800.00	$100.00	$500	$500	$500	$500	$500	$500	$500	$500	$500	$500	$500	$500	$500
21	C60-2001-16 Sand-Salt Spreader - Epoke 4900	SPREADER	NA	NA	$5,900.00	$100.00	$1,500	$1,250	$1,000	$750	$750	$500	$500	$500	$500	$500	$500	$300	$300

Catalog Pricing For RENTAL

Epoke Spreaders

							DELIVERY - Lump sum cost per region (Per Schedule D, Prosperity Regional Map)												
Item #	EQUIPMENT MAKE & MODEL:	EQUIPMENT CATEGORY	Hourly Rental	Daily Rental	Weekly Rental	Monthly Rental	1a. Western UP	1b. Central UP	1c. Eastern UP	2. Northwest	3. Northeast	4a. West Central	4b. West Michigan	5. East Central	6. East	7. South Central	8. Southwest	9. Southeast	10. Detroit Metro
1	Epoke 3800 Series	SPREADER	NA	NA	NA	$4,900	$1,500	$1,250	$1,000	$750	$750	$500	$500	$500	$500	$500	$500	$300	$300
2	Epoke 4900 Series	SPREADER	NA	NA	NA	$5,900	$1,500	$1,250	$1,000	$750	$750	$500	$500	$500	$500	$500	$500	$300	$300
							$0	$0	$0	$0	$0	$0	$0	$0	$0	$0	$0	$0	$0
NOTES:							$0	$0	$0	$0	$0	$0	$0	$0	$0	$0	$0	$0	$0
1. Minimum four (4) month rental commitment required.							$0	$0	$0	$0	$0	$0	$0	$0	$0	$0	$0	$0	$0
2. Prices do not include any mounting or installation costs.							$0	$0	$0	$0	$0	$0	$0	$0	$0	$0	$0	$0	$0

Elgin Sweepers

							DELIVERY - Lump sum cost per region (Per Schedule D, Prosperity Regional Map)												
Item #	EQUIPMENT MAKE & MODEL:	EQUIPMENT CATEGORY	Hourly Rental	Daily Rental	Weekly Rental	Monthly Rental	1a. Western UP	1b. Central UP	1c. Eastern UP	2. Northwest	3. Northeast	4a. West Central	4b. West Michigan	5. East Central	6. East	7. South Central	8. Southwest	9. Southeast	10. Detroit Metro
3	Elgin Pelican	SWEEPER	NA	$1,100	$3,300	$9,790	$1,500	$1,250	$1,000	$750	$750	$500	$500	$500	$500	$500	$500	$300	$300
4	Elgin Broom Bear	SWEEPER	NA	$1,200	$3,300	$9,790	$1,500	$1,250	$1,000	$750	$750	$500	$500	$500	$500	$500	$500	$300	$300
5	Elgin Broom Badger	SWEEPER	NA	$1,200	$3,300	$9,790	$1,500	$1,250	$1,000	$750	$750	$500	$500	$500	$500	$500	$500	$300	$300
6	Elgin Eagle	SWEEPER	NA	$1,200	$3,300	$9,790	$1,500	$1,250	$1,000	$750	$750	$500	$500	$500	$500	$500	$500	$300	$300
7	Elgin Whirlwind	SWEEPER	NA	$1,300	$3,850	$10,780	$1,500	$1,250	$1,000	$750	$750	$500	$500	$500	$500	$500	$500	$300	$300
8	Elgin Crosswind	SWEEPER	NA	$1,300	$3,850	$10,780	$1,500	$1,250	$1,000	$750	$750	$500	$500	$500	$500	$500	$500	$300	$300

Addco

							DELIVERY - Lump sum cost per region (Per Schedule D, Prosperity Regional Map)												
Item #	EQUIPMENT MAKE & MODEL:	EQUIPMENT CATEGORY	Hourly Rental	Daily Rental	Weekly Rental	Monthly Rental	1a. Western UP	1b. Central UP	1c. Eastern UP	2. Northwest	3. Northeast	4a. West Central	4b. West Michigan	5. East Central	6. East	7. South Central	8. Southwest	9. Southeast	10. Detroit Metro
9	Addco PTS-2000 Portable Traffic Signal System	Portable Sign	NA	NA	NA	$6,000	$375	$375	$375	$375	$375	$375	$375	$375	$375	$375	$375	$375	$375
							Delivery charges are one-way only and do not include pick-up.												

Spaulding Asphalt Equipment

							DELIVERY - Lump sum cost per region (Per Schedule D, Prosperity Regional Map)												
Item #	EQUIPMENT MAKE & MODEL:	EQUIPMENT CATEGORY	Hourly Rental	Daily Rental	Weekly Rental	Monthly Rental	1a. Western UP	1b. Central UP	1c. Eastern UP	2. Northwest	3. Northeast	4a. West Central	4b. West Michigan	5. East Central	6. East	7. South Central	8. Southwest	9. Southeast	10. Detroit Metro
10	Spaulding 4 Ton Asphalt Patcher	Asphalt Patcher	NA	NA	$1,500	$5,800	$500	$500	$500	$500	$500	$500	$500	$500	$500	$500	$500	$500	$500

Heil Equipment

							DELIVERY - Lump sum cost per region (Per Schedule D, Prosperity Regional Map)												
Item #	EQUIPMENT MAKE & MODEL:	EQUIPMENT CATEGORY	Hourly Rental	Daily Rental	Weekly Rental	Monthly Rental	1a. Western UP	1b. Central UP	1c. Eastern UP	2. Northwest	3. Northeast	4a. West Central	4b. West Michigan	5. East Central	6. East	7. South Central	8. Southwest	9. Southeast	10. Detroit Metro
11	Heil Commercial Front Loader	Garbage Truck	NA	NA	$2,500	$7,000	$1,500	$1,250	$1,000	$750	$750	$500	$500	$500	$500	$500	$500	$300	$300
12	Heil DP5000 Rear Loader	Garbage Truck	NA	NA	$2,200	$6,500	$1,500	$1,250	$1,000	$750	$750	$500	$500	$500	$500	$500	$500	$300	$300
13	Heil Odyssey Residential Front Loader	Garbage Truck	NA	NA	$3,500	$8,700	$1,500	$1,250	$1,000	$750	$750	$500	$500	$500	$500	$500	$500	$300	$300
14	Heil DP Python Automated Side Loader	Garbage Truck	NA	NA	$3,000	$7,800	$1,500	$1,250	$1,000	$750	$750	$500	$500	$500	$500	$500	$500	$300	$300
15	Roll Off Hoist	Garbage Truck	NA	NA	$1,850	$6,200	$1,500	$1,250	$1,000	$750	$750	$500	$500	$500	$500	$500	$500	$300	$300

EPOKE NORTH AMERICA INC

Epoke Price List

Epoke Bulk Spreaders

State of Michigan and MiDeal members are subject to a 3% discount on Epoke Bulk Spreaders.

Bulk Spreader models and technology included are: Igloo, S3800 AST, S4900/4902 Sirius Combi AST, Virtus and EpoSat

Model pricing sheets follow this page.

Pricing is effective April 20, 2016

All pricing is USD

FOB Destination North America

2458 Huntley Road, Stittsville, Ontario, Canada K2S 1A4. Phone: (613) 838-2300 Fax: (613) 838-2336 In Watts: 1-888-334-2464

EPOKE S3800/ 3800-2T SIRIUS AST

April 20, 2016
MSRP USD
FOB DESTINATION, NORTH AMERICA

Epoke S3800 Sirius AST road speed related truck mounted spreader (driven by truck mounted hydraulic system) with the following standard features and included options:

38XX	stainless steel agitator with replaceable steel spring fingers
38XX	stainless steel delivery roller with 8mm steel cams
38XX	soft rubber base & standard spring base and spring base adjustment
38XX	conveyor belt
38XX	galvanized feed funnel and inspection ladder
38XX	central placed grease points
608286	hydraulic fittings JIC – 12 pressure & return- Dealer to supply hydraulic hoses
606162	large distribution box with RS232
608362	EpoMaster III controller with RS232 & card reader
609609	ground speed adapter
425400	spout, stainless steel
38XX	wiring only for work light and wiring and beacon stems for two beacons
608569	hydraulic pressure gauge in machine house
608083	neutral gear
608XXX	liquid system including side tanks, liquid level indicator and autostop of liquid fill
608069	5 – 30% variable prewetting system
605605	shut off valve
608740	stainless steel liquid spout
38XX	safety grate 4" X 4" with 8 degree slope
608134	level indicator for dry material

Epoke S3800 Sirius AST **SMALL** hopper equipped as above with 2 X 245 gallon side tanks- select one of the following hopper options:

3830 SMALL 3m3 (4.0 cubic yard) .....$ 68,130.00

3831 SMALL 3m3 + 1m3 (5.2 cubic yard) add .....$ 1,705.00
3832 SMALL 3m3 + 2m3 (6.5 cubic yard) add .....$ 2,060.00

Epoke S3800 Sirius AST **MEDIUM** hopper equipped as above with 2 X 310 gallon side tanks- select one of the following hopper options:

3840 MEDIUM 4m3 (5.2 cubic yard) .....$ 71,685.00

3850 MEDIUM 4m3 + 1m3 (6.5 cubic yard) add .....$ 1,705.00
3851 MEDIUM 4m3 + 2m3 (7.8 cubic yard) add .....$ 2,060.00
3852 MEDIUM 4m3 + 3m3 (9.1 cubic yard) add .....$ 2,415.00

Epoke S3800 Sirius AST **LARGE** hopper equipped as above with 2 X 405 gallon side tank- select one of the following hopper options:

3860 LARGE 6m3 (7.8 cubic yard).....$ 74,525.00

3870 LARGE 6m3 + 1m3 (9.1 cubic yard) add.....$ 1,705.00
3871 LARGE 6m3 + 2m3 (10.4 cubic yard) add.....$ 2,060.00
3872 LARGE 6m3 + 3m3 (11.7 cubic yard) add.....$ 2,415.00

EPOKE S3800/ 3800-2T SIRIUS AST

April 20, 2016
MSRP USD
FOB DESTINATION, NORTH AMERICA

Select one of the following chute arrangements:
608272 Short chute arrangement for truck bed height 1072 - 1377 mm (42" to 54")
608271 Long chute arrangement for truck bed height 1415 – 1770 mm (55" to 70")

Paint: Spreaders are painted standard Epoke RAL 2011 orange. Other RAL colors are available at a Dealer net cost of $ 1,365.00 per order. This cost is for cleaning and changeover and is a total net *per order*- for one or multiple spreaders that are ordered at the same time.

Options:

608193 Front tank 265 gallon ..... $ 4,565.00

38XX Leg system (includes the following): ..... $ 7,940.00
608062 17 ton brackets; 608243 rubber protection bars on subframe; 608648 side marker/ flag; 608664 spring assist for rear legs; 608682 short console frame for front roller; 603992 multiplug kit; 38XX lateral guides

38XX Folding cover ..... $ 3,085.00

608748 'D' ring tie down kit- Dealer installed for 4 points at top corner of hopper/extension ..... $ 290.00

605423 Electric symmetry ..... $ 1,100.00

38XX Lighting includes LED Megabeam work light and two LED rotating orange beacons ..... $ 1,195.00

608665/ 609895 Frame mount kit includes 1 front pivot and 1 or 2 rear supports as required ..... $ 2,900.00

604577 Air temperature sensor ..... $ 405.00

603320 Proximity sensor for two plows ..... $ 810.00

609154 Extreme duty spinner disc and wings for sand use ..... $ 580.00

3800AST-2T Twin Spinner option (up to 80' spread width) add ..... $ 20,560.00

EPOKE S4900/ 4902 SIRIUS COMBI AST

April 20, 2016
MSRP USD
FOB DESTINATION, NORTH AMERICA

Epoke S4900 Sirius Combi AST road speed related truck mounted spreader (driven by truck mounted hydraulic system) with the following standard features and included options:

49XX	stainless steel agitator with replaceable steel spring fingers
49XX	stainless steel delivery roller with 8mm steel cams
49XX	soft rubber base & standard spring base and spring base adjustment
49XX	conveyor belt
49XX	galvanized feed funnel and inspection ladder
49XX	central grease bank
608953	hydraulic fittings JIC – 12 pressure & return- Dealer to supply hydraulic hoses
606162	large distribution box
608362	EpoMaster III controller with RS232 & card reader
609609	ground speed adapter
609026/27	wiring only for work light and wiring and beacon stems for two beacons
608765	hydraulic pressure gauge in machine house
608083	neutral gear
608XXX	auto stop fill, liquid level indicator and camlock coupling for liquid pump off
49XX	safety grate 4” X 4” with 8 degree slope
608134	level indicator for dry material

Epoke S4900 Sirius Combi AST **SMALL** hopper equipped as above with 2 X 245 gallon side tanks.
External front tanks are selected separately- see options below. Select one of the following hopper options:

4908 SMALL 3m3 (3.9 cubic yard) .....$ 72,280.00
4910 SMALL 3m3 + 1m3 (5.2 cubic yard) add .....$ 1,705.00
4912 SMALL 3m3 + 2m3 (6.5 cubic yard) add .....$ 2,060.00

Epoke S4900 Sirius Combi AST **MEDIUM** hopper equipped as above with 2 X 310 gallon side tanks.
External front tanks are selected separately- see options below. Select one of the following hopper options:

4914 MEDIUM 6m3 (7.8 cubic yard) .....$ 75,415.00
4914 MEDIUM 6m3 + 1m3 (9.1 cubic yard) add .....$ 1,705.00

Epoke S4900 Sirius Combi AST **LARGE** hopper equipped as above with 2 X 405 gallon side tanks.
External front tanks are selected separately- see options below. Select one of the following hoppers:

4918 LARGE 6m3 (7.8 cubic yard).....$ 76,905.00
4919 LARGE 6m3 + 1m3 (9.1 cubic yard) add.....$ 1,705.00
4920 LARGE 6m3 + 2m3 (10.4 cubic yard) add.....$ 2,060.00
4921 LARGE 6m3 + 3m3 (11.7 cubic yard) add.....$ 2,415.00

Select one of the following chute arrangements:

608774	Short chute arrangement for truck bed height 1072 - 1377 mm (42” to 54”)
608773	Long chute arrangement for truck bed height 1415 – 1770 mm (55” to 70”)

EPOKE S4900/ 4902 SIRIUS COMBI AST

April 20, 2016
MSRP USD
FOB DESTINATION, NORTH AMERICA

Paint: Spreaders are painted standard Epoke RAL 2011 orange. Other RAL colors are available at a Dealer net cost of $ 1,365.00 per order. This cost is for cleaning and changeover and is a total net *per order*- for one or multiple spreaders that are ordered at the same time.

Options:

External Front Tanks:
608193 265 gallon ..... $ 4,565.00
609337 460 gallon ..... $ 8,320.00
608844 660 gallon ..... $ 10,470.00
60933X 1,125 gallon..... $ 14,775.00
608845 1,320 gallon ..... $ 14,775.00
60933X 1,785 gallon..... $ 21,225.00
608846 1,980 gallon available on **SMALL** hopper only..... $ 21,225.00
60933X 2,445 gallon available on **SMALL** hopper only..... $ 27,680.00

49XX Leg system (includes the following):..... $ 7,940.00
608062 17 ton brackets; 608243 rubber protection bars on subframe; 608648 side marker/ flag; 608664 spring assist for rear legs; 608682 short console frame for front roller; 603992 multiplug kit; 49XX lateral guides

49XX Folding cover ..... $ 3,085.00

608748 'D' ring tie down kit- Dealer installed for 4 points at top corner of hopper/extension..... $ 290.00
605423 Electric symmetry..... $ 1,100.00
49XX Lighting includes LED Megabeam work light and two LED rotating orange beacons ..... $ 1,195.00
608665/ 609895 Frame mount kit includes 1 front pivot and 1 or 2 rear supports as required ..... $ 2,900.00
604577 Air temperature sensor..... $ 405.00
603320 Proximity sensor for two plows ..... $ 810.00

609154 Extreme duty spinner disc and wings for sand use ..... $ 580.00

4902 High Speed Combi includes the following features and operating specifications..... $ 12,270.00

- 3800 spinner disc (in lieu of 4900 spinner disc) and 3 cylinder, 115 cc liquid pump
- a second 6 cylinder, 280cc liquid pump for straight liquid application
- 1.2 m (4') spray boom
- 11 Spratronic Nozzles (3 center deflector type nozzles; 4 left & 4 right pencil nozzles)
- liquid spray widths of 3 to 11 m (10' to 36') in 1m (3') increments
- liquid application rates of up to 75 gallons/minute speeds up to 55 mph

EPOKE VIRTUS AST LIQUID SPREADER

April 20, 2016
MSRP USD
FOB DESTINATION, NORTH AMERICA

Epoke Virtus AST road speed related truck mounted high speed liquid spreader (driven by truck mounted hydraulic system) with the following standard features and included options:

24XX	2 X 6 cylinder 280cc liquid pumps
24XX	11 Spratronic Nozzles- 3 centre deflector type nozzles and 4 left & right pencil nozzles on 2.5 meter (8') boom
608286	hydraulic fittings JIC – 12 pressure & return- Dealer to supply hydraulic hoses
606161/ 438685	standard distribution box & ground speed adapter
608362	EpoMaster III controller with RS232 & card reader

Epoke Virtus 'AST KIT' equipped as above (without machine house) for installation & connection to locally sourced tank and frame ..... $ 49,625.00

Epoke Virtus 'CITY AST' equipped as above (with machine house & installed sprayboom) for installation and connection to locally sourced tank and frame..... $ 60,180.00

Epoke Virtus AST High Speed Liquid Spreader equipped as above with a subframe, machine house and modular frame & liquid tank system- select one of the following liquid hopper options:

3032 7500L (1,980 gallon)..... $ 97,710.00
3033 10000L (2,640 gallon)..... $ 102,260.00
3034 12500L (3,300 gallon)..... $ 106,810.00
3035 15000L (4,000 gallon)..... $ 111,360.00
3036 17500L (4,600 gallon)..... $ 117,555.00

Paint: Spreaders are painted standard Epoke RAL 2011 orange. Other RAL colors are available at a Dealer net cost of $ 1,365.00 per order. This cost is for cleaning and changeover and is a total net *per order*- for one or multiple spreaders that are ordered at the same time.

Options:

608422 Liquid empty sensor..... $ 515.00

608423 Auto-stop of liquid filling..... $ 360.00

24XX Leg System with side rollers (includes the following) ..... $ 6,840.00
608062 17 ton brackets; 608243 rubber protection bars on subframe; 608648 side marker/ flag; 608664 spring assist for rear legs; 608682 short console frame for front roller & 603992 multiplug kit

24XX Lateral Guides in lieu of side rollers..... $ 2,180.00

608748 'D' ring tie down kit- Dealer installed for 4 points at top corner of hopper/extension..... $ 290.00
606162 Large Distribution box with RS232 ..... $ 920.00
24XX LED Megabeam work lights (1 installed at spray boom) ..... $ 365.00

24XX LED Megabeam work lights (2 installed at spray boom including wiring)..... $ 770.00

24XX Beacon lighting including two LED rotating orange beacons ..... $ 830.00
604577 Air temperature sensor ..... $ 405.00
603320 Proximity sensor for two plows..... $ 810.00

609892 Diesel engine/ hydraulic pump with fuel level indicator..... $ 28,800.00

608777 Hose wand with 15m hose drum ..... $ 5,385.00

607000 JET Power option includes front mounted boom and nozzles..... $ 22,770.00

610163 JET Power hose wand with 20m hose drum..... $ 5,655.00

EPOKE IGLOO

April 20, 2016
MSRP USD
FOB DESTINATION, NORTH AMERICA

Epoke Igloo truck mounted spreader (driven by truck mounted hydraulic system) with the following standard features and included options:

2XXX	standard profiled conveyor belt
2XXX	SH- operation by vehicle hydraulics- Dealer to supply hydraulic hoses
2XXX	spreading disc
606161	standard distribution box
2XXX	standard controller: EpoSet for 2300; EpoBasic for 2400 only
438685	ground speed adapter (2400 only)
600XXX	wiring only for work light and one beacon
605663	manual spread symmetry (electric symmetry option available on S2400- see below)

Epoke Igloo S2300 (NOT road speed related) spreader equipped as above- select one of the following hopper options:

2470 0.8m3 (1.0 cubic yard).....$ 20,845.00
605106 0.15m3 (0.2 cubic yard) hopper extension for above.....$ 660.00
605107 0.3m3 (0.4 cubic yard) hopper extension for above.....$ 780.00

2471 1.1m3 (1.4 cubic yard).....$ 22,180.00
608019 0.3m3 (0.4 cubic yard) hopper extension for above.....$ 875.00
605108 0.5m3 (0.65 cubic yard) hopper extension for above.....$ 950.00

2472 1.4m3 (1.8 cubic yard).....$ 23,520.00
606491 0.2m3 (0.25 cubic yard) hopper extension for above.....$ 895.00
605109 0.6m3 (0.8 cubic yard) hopper extension for above.....$ 1,010.00

Epoke Igloo S2400 (road speed related) spreader equipped as above- select one of the following hopper options:

2485 0.6m3 (0.8 cubic yard).....$ 27,785.00
605107 0.2m3 (0.25 cubic yard) hopper extension for above.....$ 720.00

2444 0.8m3 (1.0 cubic yard).....$ 29,140.00
605106 0.15m3 (0.2 cubic yard) hopper extension for above.....$ 660.00
605107 0.3m3 (0.4 cubic yard) hopper extension for above.....$ 780.00

2446 1.1m3 (1.4 cubic yard).....$ 30,475.00
608019 0.3m3 (0.4 cubic yard) hopper extension for above.....$ 875.00
605108 0.5m3 (0.65 cubic yard) hopper extension for above.....$ 950.00

2448 1.4m3 (1.8 cubic yard).....$ 31,825.00
606491 0.2m3 (0.25 cubic yard) hopper extension for above.....$ 895.00
605109 0.6m3 (0.8 cubic yard) hopper extension for above.....$ 1,010.00

EPOKE IGLOO

April 20, 2016
MSRP USD
FOB DESTINATION, NORTH AMERICA

Select one of the following chute arrangements:

249X	Short chute arrangement for truck bed height 700 - 800 mm (27.5" to 31.5")
249X	Medium chute arrangement for truck bed height 850 – 1200 mm (33.5" to 47")
249X	Long chute arrangement for truck bed height 1100 – 1500 mm (43.5" to 59")

Paint: Spreaders are painted standard Epoke RAL 2011 orange. Other RAL colors are available at a Dealer net cost of $ 1,365.00 per order. This cost is for cleaning and changeover and is a total net *per order*- for one or multiple spreaders that are ordered at the same time.

Options:

Liquid System- select one of the following: ..... $ 9,795.00
24XX Igloo 0.6m3 includes 2 X 114L (2 X 30 gallon) side tanks
24XX Igloo 0.8m3 includes 2 X 170L (2 X 45 gallon) side tanks
24XX Igloo 1.1m3 includes 4 X 114L (4 X 30 gallon) side tanks
24XX Igloo 1.4m3includes 2 X 170L & 2 X 114L (2 X 45 gallon & 2 X 30 gallon) side tanks
Each of the above include 606XXX prewetting system fixed at 30% & 605038 shut off valve
604175 Liquid level indicator..... $ 515.00
608186 Auto-stop of liquid filling ..... $ 360.00

24XX Support leg system- long, side mounted (width is 2670 mm/ 8'9")..... $ 3,200.00

24XX Safety Grate 50mm X 50mm (2" X 2") flat ..... $ 995.00

24XX Folding cover ..... $ 2,400.00

608362 EpoMaster III with RS232 & card reader (available on S2400 only) ..... $ 3,840.00

606162 Large Distribution box with RS232 (available on S2400 only)..... $ 920.00

605298 Electric symmetry (available on S2400 only) ..... $ 1,350.00

24XX Lighting includes LED Megabeam work light & two LED beacons ..... $ 1,195.00

604577 Air temperature sensor (available on S2400 with EpoMaster III & large distribution box only) ..... $ 405.00

603320 Proximity sensor for two plows (available on S2400 with EpoMaster III & large distribution box only) $ 810.00

249X Engine/ hydraulic power (available on S2300 only) 5.5 HP Honda gas engine with manual start..... $ 3,645.00

249X Engine/ hydraulic power (available on S2400 only) 9.0 HP Honda gas engine controlled by EpoBasic/ EpoMaster..... $ 5,460.00

EPOSAT
GPS Controlled Spreading With Route Navigation

April 20, 2016
MSRP USD
FOB DESTINATION, NORTH AMERICA

Eposat GPS controlled automated spreading system with route navigation consists of two components- EpoSat office software package and an EpoSat hardware package to be installed on each spreader.

EpoSat Office Software Package

EpoSat office software package for installation on customer's PC:

- Includes a digital map displaying roads, road names, cities, forests, watercourses etc.
- Includes Omni Drive card reader and one EpoCard for reference route recording
- Includes 1 year license for EpoSat and digital mapping software
- PC requirements for EpoSat software installation: Pentium 4; Processor minimum 2.0 GHz (recommended 2.8 GHz); 256MB RAM; DVD Drive; 1 GB free space on hard drive; Color screen- 1024*768 resolution; Software: Windows 2000 or newer

606749 EpoSat office software package equipped as above for up to 50 spreaders/ 1 installation
Retail Price.....$ 15,700.00 each
606913 EpoSat office software package equipped as above for up to 100 spreaders/ 2 installations
Retail Price.....$ 14,370.00 each
606914 EpoSat office software package equipped as above for up to 150 spreaders/ 3 installations
Retail Price.....$ 13,065.00 each
606915 EpoSat office software package equipped as above for up to 200 spreaders/ 4 installations
Retail Price.....$ 11,765.00 each
606916 EpoSat office software package equipped as above for over 200 spreaders/ 5 installations (or more)
Retail Price.....$ 10,465.00 each

Optional Office Software Updates:
607806 annual (autumn release) update license for EpoSat software and digital map.....$ 4,055.00
607807 (if annual subscriptions are not purchased) update license for EpoSat software and digital map .....$ 11,255.00

EpoSat Hardware Package

EpoSat hardware package for installation on each spreader- spreader must be equipped with PWM hydraulic system and EpoMaster III with card reader. Kit includes: active GPS antenna kit, EpoSat GPS print, in cab route navigation box and installation when factory ordered on new spreaders.
Dealer installed on exiting spreaders- Dealer to quote labor for installation

600 # Varies by Model and Factory or Field Install- Contact ENAI for Ordering Information
EpoSat spreader hardware package
Retail Price.....$ 7,990.00 each***
***Spreaders may require upgrades (at additional cost) to take advantage of all of the latest EpoSat features. Provide serial number(s) to ENAI to request a quote for the required upgrade kit.

EpoSat Simulator Kit

EpoSat simulator kit for route set up and adjustment. Kit includes: active GPS antenna; distribution and white box with EpoSat GPS print; PWM and CPU boards; plug for 12 volt power point. EpoMaster III controller is required- <u>but is not included</u>
607767 EpoSat simulator kit.....$ 4,490.00

EPOKE NORTH AMERICA INC

Epoke Price List

Epoke Towed Spreaders

State of Michigan and MiDeal members are subject to a 5% discount on Epoke Towed Spreaders.

Towed Spreaders models included are: EpoMini 5, EpoMini 20, ITM 35, ITM 45, ITM 60, PM 1.4, PMH 1.4, PSL 6.5, SKE8, SKE15, SKE20, TKB12-280, TMK10-275, TP3, and TP9.

Model pricing sheets follow this page.

Pricing is effective April 20, 2016

All pricing is USD

FOB Destination North America

**Minimum Order Quantity for EpoMini 5 is 4 units

**Minimum Order Quantity for EpoMini 20 is 2 units

2458 Huntley Road, Stittsville, Ontario, Canada K2S 1A4. Phone: (613) 838-2300 Fax: (613) 838-2336 In Watts: 1-888-334-2464

EPOMINI 5

April 20, 2016
MSRP USD
FOB DESTINATION, NORTH AMERICA

EpoMini 5 manually operated road speed related spreader with the following standard features and included options:

1807 standard agitator
1807 rubber base
1807 spring base and spring base adjustment
1807 transmission
1807 delivery roller with 3mm cams
1807 pneumatic wheels

Retail Price.....$ 1,360.00

**Minimum order of 4 units

Technical Data:

Capacity:	50 liters	0.025 cubic yard
Total Width:	750 mm	29.5”
Spreading Width:	550 mm	22”
Weight:	30 kg	66 lbs

2458 Huntley Road, Stittsville, Ontario, Canada K2S 1A4. Phone: (613) 838-2300 Fax: (613) 838-2336 In Watts: 1-888-334-2464

EPOMINI 20

April 20, 2016
MSRP USD
FOB DESTINATION, NORTH AMERICA

EpoMini 20 towed road speed related spreader with the following standard features and included options:

1821 standard agitator
1821 rubber base
1821 spring base and spring base adjustment
1821 transmission
1821 delivery roller with 3 mm double cams
1821 pneumatic wheels
1821 manually operated remote on/off

Retail Price.....$ 3,170.00

One of the following draw system options must also be selected:

600706 drawbar with 1 7/8" trailer ball coupling.....$ 515.00
600743 drawbar with 25 mm eye.....$ 290.00
600693 drawbar with 38mm eye.....$ 290.00
600744 drawbar with fork.....$ 290.00
600785 three point hitch bracket.....$ 685.00

**Minimum order of 2 units

Technical Data:

Capacity:	200 liters	0.26 cubic yard
Total Width:	1065 mm	42"
Spreading Width:	800 mm	31.5"
Weight:	75 kg	165 lbs

2458 Huntley Road, Stittsville, Ontario, Canada K2S 1A4. Phone: (613) 838-2300 Fax: (613) 838-2336 In Watts: 1-888-334-2464

ITM 35

April 20, 2016
MSRP USD
FOB DESTINATION, NORTH AMERICA

Epoke ITM 35 road speed related towed spreader with the following standard features and included options:

1501	standard rubber base
1501	spring base and spring base adjustment
1501	transmission
1501	pneumatic wheels
600584	agitator
604121	delivery roller with 5 mm double cams

Retail Price.....$ 5,575.00

One of the following draw system options must also be selected:
600019 reversible drawbar with 1 7/8" trailer ball coupler and 50 mm eye.....$ 610.00
601461 three point hitch mount .....$ 1,460.00

Options (available as kits for Dealer install):
600030 lights.....$ 700.00
600028 electric remote control .....$ 1,985.00
600029 electric remote control and lights.....$ 2,685.00
600776 support leg.....$ 210.00

Technical Data:

Capacity:	350 liters	½ cubic yard
Total Width:	1150 mm	45"
Track Gauge:	1028 mm	40.5"
Spreading Width:	780 mm	31"
Weight:	145 kg	320 lbs

ITM 45

April 20, 2016
MSRP USD
FOB DESTINATION, NORTH AMERICA

Epoke ITM 45 road speed related towed spreader with the following standard features and included options:

1502	standard rubber base
1502	spring base and spring base adjustment
1502	pneumatic wheels
600962	transmission without reduction
600966	agitator
604087	delivery roller with 3 mm single cams

Retail Price..... $ 8,020.00

One of the following draw system options must also be selected:
600019 reversible drawbar with 1 7/8" trailer ball coupler and 50 mm eye..... $ 610.00
600024 lift truck fitting with support legs ..... $ 770.00
601189 three point hitch mount ..... $ 1,900.00

Options (available as kits for Dealer install):
600030 lights..... $ 700.00
600028 electric remote control ..... $ 1,985.00
600029 electric remote control and lights..... $ 2,685.00
600776 support leg..... $ 210.00
605022 250L (1/3 cubic yard) hopper extension ..... $ 755.00

Technical Data:

Capacity:	450 liters	5/8 cubic yard
Total Width:	1435 mm	56.5"
Track Gauge:	1290 mm	51"
Spreading Width:	1010 mm	40"
Weight:	192 kg	423 lbs

ITM 60

April 20, 2016
MSRP USD
FOB DESTINATION, NORTH AMERICA

Epoke ITM 60 road speed related towed spreader with the following standard features and included options:

1503	standard rubber base
1503	spring base and spring base adjustment
1503	pneumatic wheels
600962	transmission without reduction
604131	delivery roller with 3 mm single cams
605211	agitator

Retail Price..... $ 8,370.00

One of the following draw system options must also be selected:
600019 reversible drawbar with 1 7/8" trailer ball coupler and 50 mm eye..... $ 610.00
600024 lift truck fitting with support legs ..... $ 770.00
601189 three point hitch mounting ..... $ 1,900.00

Options (available as kits for Dealer install):
600044 lights..... $ 700.00
600028 electric remote control ..... $ 1,985.00
600043 electric remote control and lights..... $ 2,685.00
600776 support leg..... $ 210.00

Technical Data:

Capacity:	600 liters	3/4 cubic yard
Total Width:	1895 mm	75"
Track Gauge:	1730 mm	68"
Spreading Width:	1460 mm	57.5"
Weight:	220 kg	485 lbs

2458 Huntley Road, Stittsville, Ontario, Canada K2S 1A4. Phone: (613) 838-2300 Fax: (613) 838-2336 In Watts: 1-888-334-2464

PM1.4

April 20, 2016
MSRP USD
FOB DESTINATION, NORTH AMERICA

Epoke PM1.4 three-point hitch mounted, mechanically driven (by power take-off of tractor) spreader with the following standard features and included options:

3305	agitator
3305	safety grate
3305	standard rubber base
3305	spring base and spring base adjustment
432495	cardan shaft, 1 3/8” X 6 hub. Length = 310 mm (12”)
604289	transmission, 540 RPM right
604295	delivery roller with 3 mm cams
604719	rubber edge for fine material

Retail Price.....$ 5,940.00

Options:
604292 hopper extension- 60 liter (0.08 cubic yard).....$ 600.00
605705 hopper extension- 140 liter (0.18 cubic yard).....$ 725.00

Technical Data:

Capacity:	140 liters	0.18 cubic yard
Total Width:	1091 mm	43”
Spreading Width:	1010 mm	40”
Weight:	91 kg	201 lbs

PMH1.4

April 20, 2016
MSRP USD
FOB DESTINATION, NORTH AMERICA

Epoke PMH1.4 three-point hitch mounted, hydraulically driven (by tractor hydraulics at a flow rate of 10 – 40 liters/minute) spreader with the following standard features and included options:

3307	agitator
3307	safety grate
3307	standard rubber base
3307	spring base and spring base adjustment
604295	delivery roller with 3 mm cams
604719	rubber edge for fine material

Retail Price.....$ 5,185.00

Select one of the following transmissions:

604410	transmission 30 liter (8 gallons)
605729	transmission 15 liter (4 gallons)

Options:
604292 hopper extension- 60 liter (0.08 cubic yard).....$ 600.00
605705 hopper extension- 140 liter (0.18 cubic yard).....$ 725.00

Technical Data:

Capacity:	140 liters	0.18 cubic yard
Total Width:	1091 mm	43”
Spreading Width:	1010 mm	40”
Weight:	85 kg	188 lbs

SKE 8

April 20, 2016
MSRP USD
FOB DESTINATION, NORTH AMERICA

Epoke SKE 8 road speed related towed spreader with the following standard features and included options:

1001	spring base and spring base adjustment
1001	transmission
200591	76 mm draweye
600219	agitator
600220	rubber base for salt
600224	solid support wheel
600969	24% reduction
601740	lights
601938	electric remote
604314	delivery roller with 8 mm double cams
606612	6.00 X 9 12 ply tires

Retail Price..... $ 17,135.00

Select one of the following drawbars:

600225	685 mm (27”) drawbar
600226	1085 mm (43”) drawbar

Options:
600231 second agitator shaft (Parts kit- Dealer Installed)..... $ 1,810.00

City Combi Liquid System (factory installed or as a kit to be retrofitted to existing SKE8’s)
360 Liter (95 gallon) liquid tanks
Road speed related: 0- 20 km/h
Dry material, pre- wet material and straight liquid application capable

Retail Price..... $ 8,385.00

Technical Data:

Capacity:	750 liters	1.00 cubic yard
Total Width:	1285 mm	50.6”
Track Gauge:	790 mm	31”
Spreading Width (both dry & liquid):	1008 mm	40”
Weight:	400 kg	880 lbs

SKE 15

April 20, 2016
MSRP USD
FOB DESTINATION, NORTH AMERICA

Epoke SKE 15 road speed related towed spreader with the following standard features and included options:

1004	spring base and spring base adjustment
1004	transmission
1004	solid support wheel
200591	76 mm draweye
600154	rubber base for salt
600261	one-sided transmission
600267	24% reduction
601746	lights
601938	electric remote
601993	agitator
604336	delivery roller with 7 rows 3 mm single cams
605229	7.50 X 10 14 ply tires

Retail Price.....$ 22,810.00

Options:
600406 0.5m3 (0.65 cubic yard) hopper extension.....$ 785.00

Technical Data:

Capacity:	1.25 cubic meters	1.64 cubic yard
Total Width:	1665 mm	65.5”
Track Gauge:	1000 mm	31”
Spreading Width:	1390 mm	55”
Weight:	600 kg	1,323 lbs

SKE 20

April 20, 2016
MSRP USD
FOB DESTINATION, NORTH AMERICA

Epoke SKE 20 road speed related towed spreader with the following standard features and included options:

1005	spring base and spring base adjustment
1005	transmission
1005	solid support wheel
200591	76 mm draweye
600088	rubber base for salt
600261	one-sided transmission
600267	24% reduction
601750	lights
601938	electric remote
601994	agitator
604357	delivery roller with 7 rows 3 mm single cams
605229	7.50 X 10 14 ply tires

Retail Price.....$ 24,670.00

Technical Data:

Capacity:	1.65 cubic meters	2.16 cubic yard
Total Width:	2195 mm	86.4”
Track Gauge:	1530 mm	60”
Spreading Width:	1918 mm	75.5”
Weight:	720 kg	1,588 lbs

TKB12-280

April 20, 2016
MSRP USD
FOB DESTINATION, NORTH AMERICA

Epoke TKB12-280 road speed related towed spreader (spreads when driving forwards and backwards) with the following standard features and included options:

1108	transmission with 38% reduction
1108	spring base and spring base adjustment
1108	agitator
439226	rubber base for salt
600129	76 mm draweye
600878	rubber front edges, low
607741	guide chains, standard (2196 mm)
607994	rubber apron
607923	lights
601938	electric remote
603909	delivery roller with 3 mm double cams
606612	6.00 X 9 12 ply tires
603913	support wheel- solid

Retail Price.....$ 22,375.00

Options:
601592 Hopper Empty Sensor .....$ 480.00

Technical Data:

Capacity:	1.2 cubic meters	1.57 cubic yard
Total Width:	2800 mm	110.2”
Inside Hopper Width	2770 mm	109.1”
Track Gauge:	1800 mm	70.9”
Spreading Width:	2500 mm	98.4”
Weight:	710 kg	1,565 lbs

2458 Huntley Road, Stittsville, Ontario, Canada K2S 1A4. Phone: (613) 838-2300 Fax: (613) 838-2336 In Watts: 1-888-334-2464

TMK10-275

April 20, 2016
MSRP USD
FOB DESTINATION, NORTH AMERICA

Epoke TMK10-275 road speed related towed spreader with the following standard features and included options:

1405	spring base and spring base adjustment
600129	76 mm draweye
600138	guide chains, standard
600142	rubber apron
600280	rubber base for sand
600296	agitator
600878	rubber front edges, low
601754	lights
601938	electric remote
604066	delivery roller with 5 mm double cams
604084	transmission with agitator
606612	6.00 X 9 12S tires

Retail Price.....$ 19,175.00

Options:
601592 Hopper Empty Sensor.....$ 480.00
600273 Lift Truck Bracket.....$ 950.00

Technical Data:

Capacity:	1.00 cubic meters	1.31 cubic yard
Total Width:	2750 mm	108.3”
Inside Hopper Width	2700 mm	106.3”
Track Gauge:	2332 mm	91.8”
Spreading Width:	2000 mm	78.8”
Weight:	400 kg	882 lbs

2458 Huntley Road, Stittsville, Ontario, Canada K2S 1A4. Phone: (613) 838-2300 Fax: (613) 838-2336 In Watts: 1-888-334-2464

PSL 6.5

April 20, 2016
MSRP USD
FOB DESTINATION, NORTH AMERICA

Epoke PSL 6.5 three-point hitch mounted, hydraulically driven (by tractor hydraulic system) self loading spreader with the following standard features and included options:

3330	spring base and spring base adjustment
601664	delivery roller for cams
406985	5 mm cams
601646	rubber base for salt
439204	hydraulic system (without remote control) for double hydraulic connection to tractor

Retail Price.....$ 11,590.00

Technical Data:

Capacity:	600 liters	¾ cubic yard
Total Width:	1980 mm	78”
Spreading Width:	1770 mm	70”
Weight:	315 kg	695 lbs

2458 Huntley Road, Stittsville, Ontario, Canada K2S 1A4. Phone: (613) 838-2300 Fax: (613) 838-2336 In Watts: 1-888-334-2464

EPOKE TP SPREADER

April 20, 2016
MSRP USD
FOB DESTINATION, NORTH AMERICA

Epoke TP Series Drop and Broadcast Spreader road speed related 3 point hitch tractor mounted spreader (driven by tractor hydraulic system) with the following standard features and included options:

TPXX	Epoke principle with agitator and delivery roller with 5mm cams
TPXX	spring base
TPXX	stainless spreading disc assembly
TPXX	SH- operation by tractor hydraulics- Dealer to supply hydraulic hoses
TPXX	galvanized safety grate 50mm X 50mm (2" X 2") flat
TPXX	standard distribution box
TPXXX	EpoBasic controller
438685	ground speed adapter
TPXX	work light and road lights
TPXX	support legs
TPXX	electric symmetry

Epoke TP3 spreader equipped as above:
TP3 0.3m3 (0.4 cubic yard) dry material capacity .....$ 29,275.00
TP3XX liquid system 200L (53 gal) capacity, prewet fixed at 30% & liquid level indicator .....$ 6,700.00
TP3XX 0.1m3 (0.13 cubic yard) hopper extension .....$ 660.00
TP3XX 0.2m3 (0.25 cubic yard) hopper extension .....$ 795.00
TP3XX 0.3m3 (0.4 cubic yard) hopper extension .....$ 895.00

Epoke TP9 spreader equipped as above:
TP9 0.9m3 (1.2 cubic yard) dry material capacity .....$ 33,895.00
TP9XX liquid system 500L (132 gal) capacity, prewet fixed at 30% & liquid level indicator ...$ 8,035.00
TP9XX 0.3m3 (0.4 cubic yard) hopper extension .....$ 900.00
TP9XX 0.6m3 (0.8 cubic yard) hopper extension .....$ 1,105.00

Paint: Spreaders are painted standard Epoke RAL 2011 orange. Other RAL colors are available at a Dealer net cost of $ 1,435.00 per order. This cost is for cleaning and changeover and is a total net *per order*- for one or multiple spreaders that are ordered at the same time.

Options:

TP9X self-loading option (for TP9 only) from tractor hydraulic system .....$ 10,280.00

TPXX cover .....$ 1,080.00

TPXX PTO drive (in lieu of hydraulic supply from tractor) .....$ 3,560.00

MODEL: BROOM BADGER
EFFECTIVE DATE: 11/1/2015
SUPERCEDES ALL PREVIOUS PRICE LISTS
DEALER PRICE LIST (U.S. DOLLARS)

Purchase Order #	
Order Date:	
Delivery Date Requirment If Any:	

Ship To Address:
State Penalty Clause If Applicable:

QUANTITY	PART NUMBER	MODEL DESCRIPTION	2016 LIST PRICE	2016 EXTENDED
0	5801001	**BROOM BADGER - DUAL SIDE BROOMS** **LEFT SIDE DUMPING HOPPER** Rear-axle air suspension, conveyor squeegee, dual, hydraulically driven side brooms, variable height up to 10', left side dumping hopper. Sweeper is painted Elgin white and includes the standard features listed below.	$127,565	$0.00
0	5801008	**BROOM BADGER - DUAL SIDE BROOMS** **RIGHT SIDE DUMPING HOPPER** Rear-axle air suspension, conveyor squeegee, dual, hydraulically driven side brooms, variable height up to 10', right side dumping hopper. sweeper is painted Elgin white and includes the standard features listed below.	$127,565	$0.00
0	5801010	USA 2016 ISUZU NRR LEFT HAND STEER INCLUDES MOUNTING CHARGE	[redacted]	$0.00
0	5801115	**DUALIZATION FOR 2016 MY**	$12,000	$0.00
0	NO CHARGE	**CHASSIS MOUNTING CHARGE**	N/C	$0.00

NOTE: Customer supplied chassis are not accepted due to Isuzu controled modicifations.

NOTE: One year warranty on all Elgin supplied parts and labor. Consult your Elgin dealer for full warranty details.

STANDARD FEATURES

AM/FM Radio w/ CD
Aux-engine Kubota V2403M 59hp, Tier 4i
Aux-engine Murphy shut down system
Low engine oil pressure, high coolant temp, hyd oil level/temp shutdown
Broom side, 36" and 42" steel vertical digger 4 and 5 segment
Broom side, hydraulic floating suspension, adjustable spring loaded deploy
Broom, main, 34" diameter, 58" wide prefab disposable
Camera, Rear and RH side view with in-cab monitor
Chromed shaft pivots
Conveyor chain, hardened with polyurethane sprockets
Conveyor, 8 flight squeegee with rubber edging
Conveyor, lift independent from main broom
Conveyor, two piece replaceable wear plates
Conveyor raise automatic in reverse
Conveyor stall alarm
Dirt shoes, heavy duty steel
Electric backup alarm
Front spray bar
Greaseless composite bushings
Hopper inspection door
Hydraulic pump,variable dispacement, load-sense,piston type
PM 10 Compliant (RULE 1186)
Rear Axle Air Suspension

MODEL: BROOM BADGER
EFFECTIVE DATE: 11/1/2015
SUPERCEDES ALL PREVIOUS PRICE LISTS
DEALER PRICE LIST (U.S. DOLLARS)

QUANTITY	PART NUMBER	MODEL DESCRIPTION	2016 LIST PRICE	2016 EXTENDED
		----------BROOMS---------		
0	5801104	STRIP MAIN BROOM ILO STD	$650.00	$0.00
		----------HOPPER---------		
0	5801128	STAINLESS STEEL HOPPER	$6,000.00	$0.00
		---------LIGHTS----------		
0	5801103	AMBER STROBE MOUNTED DIRECTLY BEHIND TRUCK CAB, VISIBLE FROM IN FRONT OF THE TRUCK	$440.00	$0.00
0	5801105	REAR MOUNTED LED LIGHTBAR	$1,875.00	$0.00
0	5801113	SECOND AMBER REAR STROBE MOUNTED ON THE CURBSIDE IN ADDITION TO THE STANDARD STREET SIDE AMBER STROBE	$325 00	$0.00
0	5801126	REAR LED TAIL LIGHTS (INCLUDES STOP, BACKUP, TURN AND TAIL)	$540.00	$0.00
		-------PM10 OPTIONS-------		
0	STANDARD	PM10 COMPLIANT (RULE 1186)	N/C	$0.00
		---------SAFETY---------		
0	SPECIAL	REMOVE REAR CAMERA (DEDUCT)	N/C	$0.00
		------SWEEP COMPONTENTS--		
0	STANDARD	SIDE BROOM TILT - RIGHT	N/C	$0.00
0	STANDARD	SIDE BROOM TILT - LEFT	N/C	$0.00
		----- MANUALS----		
0	0701669	ADDITIONAL BROOM BADGER OPERATORS MANUAL	$65.00	$0.00
0	0702230	BROOM BADGER PARTS MANUAL	CONTACT MIMEO	$0.00
		--------WATER SYSTEM------		
0	5801107	CONVEYOR FLUSHER	$1,150.00	$0.00
		--ISUZU NRR CHASSIS OPTIONS---		
0	SPECIAL	REAR LEAF SPRING SUSPENSION IN LIEU OF STANDARD AIR SUSPENSION REAR AXLE (DEDUCT)	-$4,250.00	$0 00
		---------WARRANTY---------		
0	EW-139-2PL	SECOND YEAR WARRANTY PARTS/LABOR MODULE ONLY (EXCL. AUX ENG)	$2,650	$0 00
0	EW-139-3PL	THIRD YEAR WARRANTY PARTS/LABOR MODULE ONLY (EXCL. AUX ENG)	$4,995	$0.00

MODEL: BROOM BADGER
EFFECTIVE DATE: 11/1/2015
SUPERCEDES ALL PREVIOUS PRICE LISTS
DEALER PRICE LIST (U.S. DOLLARS)

QUANTITY	PART NUMBER	MODEL DESCRIPTION	2016 LIST PRICE	2016 EXTENDED
		----FREIGHT RATES----		
0	FRT-139-001	SELF SHIPPING DOCK CHARGE	$520.00	$0.00
0	FRT-139-900	ALASKA	call for quote	$0.00
0	FRT-139-901	ALABAMA	$3,690.00	$0.00
0	FRT-139-902	ARKANSAS	$3,020.00	$0.00
0	FRT-139-903	ARIZONA	$4,205.00	$0.00
0	FRT-139-904	CALIFORNIA	$5,055.00	$0.00
0	FRT-139-905	COLORADO	$3,940.00	$0.00
0	FRT-139-906	CONNECTICUT	$4,325.00	$0.00
0	FRT-139-907	DELAWARE	$4,080.00	$0.00
0	FRT-139-908	FLORIDA	$5,150.00	$0.00
0	FRT-139-909	GEORGIA	$4,320.00	$0.00
0	FRT-139-910	HAWAII	call for quote	$0.00
0	FRT-139-911	IOWA	$1,965.00	$0.00
0	FRT-139-912	IDAHO	$3,815.00	$0.00
0	FRT-139-913	ILLINOIS	$2,145.00	$0.00
0	FRT-139-914	INDIANA	$2,610.00	$0.00
0	FRT-139-915	KANSAS	$2,210.00	$0.00
0	FRT-139-916	KENTUCKY	$2,885.00	$0.00
0	FRT-139-917	LOUISIANA	$4,285.00	$0.00
0	FRT-139-918	MASSACHUSETTS	$4,375.00	$0.00
0	FRT-139-919	MARYLAND	$3,845.00	$0.00
0	FRT-139-920	MAINE	$5,350.00	$0.00
0	FRT-139-921	MICHIGAN	$2,375.00	$0.00
0	FRT-139-922	MINNESOTA	$1,620.00	$0.00
0	FRT-139-923	MISSOURI	$2,920.00	$0.00
0	FRT-139-924	MISSISSIPPI	$3,715.00	$0.00
0	FRT-139-925	MONTANA	$3,360.00	$0.00
0	FRT-139-926	NORTH CAROLINA	$3,840.00	$0.00
0	FRT-139-927	NORTH DAKOTA	$1,565.00	$0.00
0	FRT-139-928	NEBRASKA	$2,020.00	$0.00
0	FRT-139-929	NEW HAMPSHIRE	$4,500.00	$0.00
0	FRT-139-930	NEW JERSEY	$3,860.00	$0.00
0	FRT-139-931	NEW MEXICO	$4,125.00	$0.00
0	FRT-139-932	NEVADA	$4,170.00	$0.00
0	FRT-139-933	NEW YORK	$5,545.00	$0.00
0	FRT-139-934	OHIO	$3,030.00	$0.00
0	FRT-139-935	OKLAHOMA	$3,050.00	$0.00
0	FRT-139-936	OREGON	$4,465.00	$0.00
0	FRT-139-937	PENNSYLVANIA	$3,480.00	$0.00
0	FRT-139-938	RHODE ISLAND	$4,515.00	$0.00
0	FRT-139-939	SOUTH CAROLINA	$3,955.00	$0.00
0	FRT-139-940	SOUTH DAKOTA	$1,875.00	$0.00
0	FRT-139-941	TENNESSEE	$3,250.00	$0.00
0	FRT-139-942	TEXAS	$3,975.00	$0.00
0	FRT-139-943	UTAH	$3,635.00	$0.00
0	FRT-139-944	VIRGINIA	$3,845.00	$0.00
0	FRT-139-945	VERMONT	$4,775.00	$0.00
0	FRT-139-946	WASHINGTON	$4,425.00	$0.00
0	FRT-139-947	WISCONSIN	$2,105.00	$0.00
0	FRT-139-948	WEST VIRGINIA	$3,270.00	$0.00
0	FRT-139-949	WYOMING	$3,030.00	$0.00

NOTE CALL FOR FREIGHT QUOTE IF YOU HAVE MORE THAN ONE UNIT SHIPPING SIMULTANEOUSLY

SUB TOTAL	$0.00

		-----DISCOUNTS----		
0	DISC-139-ADDL	ADDITIONAL DISCOUNT	$0.00	$0.00
0	DISC-139-PROMO	PROMO DISCOUNT	$0.00	$0.00

GRAND TOTAL	$0.00

This is Bell Equipment's 9/15/16 price list for the MIDeal quote

MODEL: BROOM BEAR
EFFECTIVE DATE: 10/03/2016
SUPERCEDES ALL PREVIOUS PRICE LISTS
PRICE LIST (U.S. DOLLARS)

Purchase Order #	
Order Date:	
Delivery Date Requirment If Any:	

Ship To Address:
State Penalty Clause If Applicable:

QUANTITY	PART NUMBER	MODEL DESCRIPTION	2016 PRICE	2016 EXTENDED	2017 MIDeal PRICE
0	1113136	**BROOM BEAR DUAL**	$142,500	$0.00	$145,350.0
		Conveyor squeege, variable height, right side dumping, 4.5 cu. yd. hopper, with dual, hydraulically driven, trailing arm sidebrooms, sweeper is powder coated from powder coatings chart 2003/N with powder coated gray undercarriage and including the standard features listed below.			

CHASSIS

0	1122061	2017 FL M2 (2013 EMISSIONS) W/HEATED MIRRORS (LIMITED QTY)	CONSALT FACTORY	$0.00
0	1119897	2016 IH 4400 (2015 EMISSIONS) W/HEATED MIRRORS (LIMITED QTY)	CONSALT FACTORY	$0.00

CHASSIS MOUNTING CHARGE

0	1122083	M2 - CHASSIS ALTERATIONS	$2,135	$0.00
0	1115832	IH - CHASSIS ALTERATIONS	$3,250	$0.00
0	SPECIAL	CUSTOMER SUPPLIED CHASSIS ALTERATIONS	CONTACT INSIDE SALES	$0.00
0	CSC-HANDLING	CUSTOMER SUPPLIED HANDLING CHARGE	$2,815	$0.00

NOTE: Customer Supplied Cassis Requires Both The Chassis Alterations and the Handling Charge

NOTE: A BODY includes the cost of Elgin standard white finish paint. It does not however, include the price of the chassis.

NOTE: The chassis being supplied by a customer or dealer **must** comply completely with all Elgin requirements or the chassis will be modified at dealer's expense.

NOTE: For cost of sweeper mounted on any other chassis, consult factory.

NOTE: One year warranty on all Elgin supplied parts and labor. Consult your Elgin dealer for full warranty details.

STANDARD FEATURES

1	0701681	BROOM BEAR OPERATORS MANUAL	STANDARD	$0.00
1	0702241	BROOM BEAR PARTS BOOK	STANDARD	$0.00
1	0730166	BROOM MEASUREMENT RULER	STANDARD	$0.00
1	1032481	16' 8" WATER FILL HOSE	STANDARD	$0.00
1	0701707	MACHINE DELIVERY PACKET	STANDARD	$0.00
1	0702020	ELGIN SAFETY MANUAL	STANDARD	$0.00

Broom side, 46 "steel vertical digger 4 or 5 segment
Broom side, air floating suspension with adjustable pin stops, air deploy
Broom, main, 34" diameter, 60" wide prefab disposable
Camera, Rear with in-cab monitor
Conveyor chain, hardened with polyurethane sprockets
Conveyor, 11 flight squeegee with rubber edging
Conveyor, lift independent from main broom
Conveyor, three piece replaceable wear plates
Conveyor flush out system
Conveyor raise in reverse
Conveyor stall alarm
Dirt shoes, heavy duty single row carbide steel (rubber isolated)
Electric backup alarm
Hopper inspection door
Hopper, 4.5 cu yd with window and skylight
Hopper up indicator and beep
Hopper, variable high dump, 9'6", 4.5 yard
Hose, hydrant fill, 16'8" (5080 mm) with strainer and coupling
Hydraulic oil level gauge w/ external thermometer and in-cab level light
Hydraulic system, load sensing with selectable transmission driven PTO pump

Lights, automatic backup
Lights, combination tail/stop, separate amber signal
Lights, flood light, one per broom (3)
Manuals, operator and parts
Mechanical mainbroom suspension
Rear broom cover and anti-carryover wrap
Rear broom spray bar
Rear right hand flood light
Reflectors, set of 6
Sidebroom speed control, external to cab
Sweep resume / raise in reverse
Tactile controls for all sweep functions
Tool storage
Water fill, anti-siphon
Water level indicator in-cab
Water Pump, electric diaphragm
Water tank, molded polyethylene,
360 gallon total nominal capacity

MODEL: BROOM BEAR

SUPERCEDES ALL PREVIOUS PRICE LISTS
PRICE LIST (U.S. DOLLARS)

QUANTITY	PART NUMBER	MODEL DESCRIPTION	2016 PRICE	2016 EXTENDED	2017 MIDeal PRICE
		-----ALARMS/INDICATORS----			
0	SPECIAL	ECCO SA940 SMART ALARM (ILO of STD)	$270.00	$0.00	$272.70
0	1101528	LATCHING ELEVATOR REVERSE AND ALARM	$385.00	$0.00	$388.85
0	1104970	HOPPER UP CONSTANT ALARM	$355.00	$0.00	$358.55
0	1104705	HOPPER FULL INDICATOR	$770.00	$0.00	$777.70
		-------AUTO LUBE----------			
0	1101559	MIDWEST AUTO LUBE - SWEEPER ONLY	$4,835.00	$0.00	$4,883.35
		-----ADDITIONAL MANUALS----			
0	0701681	BROOM BEAR OPERATORS MANUA	$50.00	$0.00	$50.50

0	0702461	BROOM BEAR SERVICE MANUAL	$95.00	$0.00	$95.95
0	0702241	BROOM BEAR PARTS BOOK	$95.00	$0.00	$95.95

----------BROOMS---------

0	1035616	DOUBLE WRAP MAINBROOM	$445.00	$0.00	$449.45
0	1035617	POLY/WIRE WAFER MAINBROOM	$520.00	$0.00	$525.20
0	1035621	(1) ALUMINUM SIDEBROOM SEGMENT PER SIDE	$505.00	$0.00	$510.05
0	1058156	STRIP MAINBROOM (MILWAUKEE)	$485.00	$0.00	$489.85
0	1058158	STRIP MAINBROOM (URB)	$250.00	$0.00	$252.50
0	1077151	URB STRIP MAINBROOM W/CENTER SWEEP MANDREL	$250.00	$0.00	$252.50
0	1095046	ALUMINUM SIDEBROOM SEGMENTS - BLUE STEEL	$320.00	$0.00	$323.20
0	1096691	DEDUCT MAIN BROOM & CORE	-$435.00	$0.00	-$435.00
0	1115524	HYDRAULIC FLOAT MAINBROOM SUSPENSION	N/C	$0.00	N/C
0	1116748	HYDRAULIC SIDEBROOM WITH HYDRAULIC MAINBROOM SUSPENSION **(MUST SELECT HYDRAULIC MAINBROOM SUSPENSION OPTION)**	N/C	$0.00	N/C
0	1115679	IN CAB HYDRAULIC FLOAT SIDEBROOMS **(NOT COMPATIBLE WITH HYDRAULIC MAINBROOM SUSPENSION)**	N/C	$0.00	N/C

----------DECALS---------

1	1102781	RED DECALS - BROOM BEAR	N/C	$0.00	N/C
0	1102782	WHITE DECALS - BROOM BEAR	N/C	$0.00	N/C
0	1101037	SLOW MOVING VEHICLE SIGN	$150.00	$0.00	$151.50

--------GAUGES----------

0	1101379	BROOM HOUR METERS	$370.00	$0.00	$373.70
0	1111656	HYDRAULIC OIL TEMP DISPLAY (IN CAB)	$345.00	$0.00	$348.45
0	SPECIAL	HYDRAULIC OIL HIGH TEMPERTURE, LOW LEVEL PTO OFF WITH DISPLAY	$510.00	$0.00	$515.10

----------HOPPER----------

0	1104503	LIFELINER HOPPER SYSTEM W/WARRANTY	$4,505.00	$0.00	$4,550.05
0	1101951	STAINLESS STEEL HOPPER	$9,005.00	$0.00	$9,095.05

--------LIGHTS----------

0	1103553	PACKAGE 1 : SINGLE REAR/SINGLE HOPPER BEACON; LED WITH GUARD	$1,930.00	$0.00	$1,949.30
0	1103533	PACKAGE 2 : DUAL REAR/SINGLE HOPPER BEACON; LED WITH GUARD	$2,635.00	$0.00	$2,661.35
0	1103536	PACKAGE 3 : DUAL REAR/SINGLE HOPPER BEACON; LED WITH GUARD & LED ARROWSTICK	$4,060.00	$0.00	$4,100.60
0	1104618	PACKAGE 4 : SINGLE REAR/SINGLE HOPPER MOUNT AND GUARD - W/O BEACONS	$1,570.00	$0.00	$1,585.70
0	1104619	PACKAGE 5 : DUAL REAR/SINGLE HOPPER MOUNT AND GUARD - W/O BEACONS	$1,955.00	$0.00	$1,974.55
0	1102735	LED STOP/TAIL/TURN/REAR ID/CLEARANCE LIGHTS	$340.00	$0.00	$343.40
0	1102759	REAR MOUNTED LED ARROWSTICK	$1,700.00	$0.00	$1,717.00
0	1102736	(2) REAR LOW MOUNTED OVAL AMBER LED FLASHERS	$455.00	$0.00	$459.55
0	1103898	(2) REAR HIGH MOUNTED OVAL AMBER LED FLASHERS	$560.00	$0.00	$565.60
0	1114836	(3) LED WORK LIGHTS (1 EACH SIDE BROOM, 1 ON MAINBROOM)	$495.00	$0.00	$499.95
0	1114837	(4) LED WORK LIGHTS (1 EACH SIDE BROOM, 2 ON MAINBROOM)	$795.00	$0.00	$802.95
0	1104481	ARROWBOARD - REAR	$2,020.00	$0.00	$2,040.20

MODEL: BROOM BEAR

SUPERCEDES ALL PREVIOUS PRICE LISTS
PRICE LIST (U.S. DOLLARS)

QUANTITY	PART NUMBER	MODEL DESCRIPTION	2016 PRICE	2016 EXTENDED	2017 MIDeal PRICE

---------PAINT----------

1	4810001	PAINT SWEEPER STANDARD WHITE	N/C	$0.00	N/C
0	4811003	PAINT SWEEPER YELLOW RAL 1003	$500.00	$0.00	$505.00
0	4811007	PAINT SWEEPER YELLOW RAL 1007	$500.00	$0.00	$505.00
0	4811018	PAINT SWEEPER YELLOW RAL 1018	$500.00	$0.00	$505.00
0	4811023	PAINT SWEEPER YELLOW RAL 1023	$500.00	$0.00	$505.00
0	4811037	PAINT SWEEPER YELLOW RAL 1037	$500.00	$0.00	$505.00
0	4812008	PAINT SWEEPER ORANGE RAL 2008	$500.00	$0.00	$505.00
0	4812009	PAINT SWEEPER ORANGE RAL 2009	$500.00	$0.00	$505.00
0	4816018	PAINT SWEEPER GREEN RAL 6018	$500.00	$0.00	$505.00
0	SPECIAL	PAINT SWEEPER OTHER RAL THAN ABOVE	$1,250.00	$0.00	$1,262.50
0	SPECIAL	PAINT SWEEPER OTHER THAN ABOVE	$3,790.00	$0.00	$3,827.90
0	1069927	ANTI GRAFFITI COATING	$3,760.00	$0.00	$3,797.60

-------PM10 OPTIONS-------

0	1115481	PM10 COMPLIANT (RULE 1186)	$3,060.00	$0.00	$3,090.60

---------SAFETY----------

0	1104991	REMOVE REAR CAMERA	N/C	$0.00	N/C
0	1095548	LEFT HAND SIDE CAMERA	$575.00	$0.00	$580.75
0	9306848	TRIANGLE REFLECTIVE FLARES (3)	$75.00	$0.00	$75.75

------SWEEPER OPTIONS-----

0	1100660	LEFT HAND SIDEBROOM TILT	$1,200.00	$0.00	$1,212.00
0	1100656	RIGHT HAND SIDEBROOM TILT	$1,200.00	$0.00	$1,212.00
0	1117071	LEFT HAND SIDEBROOM TILT W/INDICATOR	$1,200.00	$0.00	$1,212.00
0	1117070	RIGHT HAND SIDEBROOM TILT W/INDICATOR	$1,200.00	$0.00	$1,212.00
0	1101385	RUBBER MOUNTED CARBIDE DRAG SHOES TWO-ROW (ILO STD)	$760.00	$0.00	$767.60
0	1102732	RUBBER DRAG-SHOES (ILO STD)	$115.00	$0.00	$116.15
0	1104238	BORON DRAG-SHOES (ILO STD)	$125.00	$0.00	$126.25
0	1104997	IN-CAB VARIABLE SPEED AND REVERSING BROOM CONTROL	$2,000.00	$0.00	$2,020.00

0	1104990	VARIABLE SPEED CONVEYOR	$1,850.00	$0.00	$1,868.50
0	1106049	HEAVY DUTY LOWER ROLLER	$1,000.00	$0.00	$1,010.00
0	1114619	RUBBER BELT CONVEYOR (ILO STANDARD SQUEEGEE)	N/C	$0.00	N/C
0	1120535	CONVEYOR ONLY ROTATE FOR WASHDOWN	$465.00	$0.00	$469.65

-----TOOLS/TOOLBOXES------

0	1053426	TOOL KIT	$735.00	$0.00	$742.35
0	1057687	TOOL BOX W/TOOLS	$710.00	$0.00	$717.10

--------WATER SYSTEM------

0	1032484	25' WATER FILL HOSE (ILO 16' 8")	$190.00	$0.00	$191.90
0	1108830	AIR PURGE FOR WATER SYSTEM	$375.00	$0.00	$378.75
0	1113859	WATER SIDEBROOM FUNCTION CONTROL (ILO MANUAL) **(USE WITHOUT EXTENDED SIDEBROOM REACH)**	$430.00	$0.00	$434.30
0	1121603	WATER SIDEBROOM FUNCTION CONTROL (ILO MANUAL) **(USE WITH EXTENEDED SIDEBROOM REACH)**	$430.00	$0.00	$434.30

MODEL: BROOM BEAR

SUPERCEDES ALL PREVIOUS PRICE LISTS
PRICE LIST (U.S. DOLLARS)

QUANTITY	PART NUMBER	MODEL DESCRIPTION	2016 PRICE	2016 EXTENDED	2017 MIDeal PRICE
		---M2 CHASSIS OPTIONS-----			
0	0704005	M2 PARTS BOOK	$395.00	$0.00	$398.95
0	0704006	M2 OPERATOR BOOK	$45.00	$0.00	$45.45
0	0704007	M2 SERVICE MANUAL	$320.00	$0.00	$323.20
0	1071235	FUEL CAP SAFETY LOCK	$215.00	$0.00	$217.15
0	1075400	AM/FM/CD RADIO	$890.00	$0.00	$898.90
0	1080756	FENDER MOUNTED MIRROR-LEFT HAND	$505.00	$0.00	$510.05
0	1109607	12" CONVEX MIRRORS (IL0 STD 8")	$315.00	$0.00	$318.15
0	1081188	SPARE CHASSIS KEY	$45.00	$0.00	$45.45
0	1081365	IN CAB AIR FILTER RESTRICTION INDICATOR	$830.00	$0.00	$838.30
0	1081747	(2) AIR CLOTH HI-BACK	$2,010.00	$0.00	$2,030.10
0	1081748	(1) AIR CLOTH HI-BACK SEAT	$1,035.00	$0.00	$1,045.35
0	1120505	SPARE TIRE & WHEEL, BALANCED	$1,315.00	$0.00	$1,328.15
0	1081909	SINGLE ARM REST - VINYL	$360.00	$0.00	$363.60
0	1081910	DUAL ARM REST - VINYL	$680.00	$0.00	$686.80
0	1081911	SINGLE ARM REST - CLOTH	$360.00	$0.00	$363.60
0	1081912	DUAL ARM REST - CLOTH	$680.00	$0.00	$686.80
0	1081956	DAYTIME RUNNING LIGHTS	$1,050.00	$0.00	$1,060.50
0	1090653	DUAL AIR HORNS	$1,530.00	$0.00	$1,545.30
0	1101560	MIDWEST AUTOLUBE - SWEEPER/TRUCK	$7,040.00	$0.00	$7,110.40
0	1101567	2 1/2 LB. FIRE EXTINGUISHER	$210.00	$0.00	$212.10
0	1101568	5 LB. FIRE EXTINGUISHER	$240.00	$0.00	$242.40
0	1108053	FULL WIDTH FRONT SPRAY BAR	$975.00	$0.00	$984.75
0	1072443	MASTER BATTERY SWITCH	$505.00	$0.00	$510.05
0	4820001	CAB STANDARD WHITE	N/C	$0.00	N/C
0	SPECIAL	VOGEL AUTOLUBE - SWEEPER/TRUCK	$11,095.00	$0.00	$11,205.95
0	1063734	M2 (IN STOCK) CAB SPECIAL COLOR	$3,775.00	$0.00	$3,812.75
0	SPECIAL	TRUCK RIMS - ALL	$1,140.00	$0.00	$1,151.40
0	1103082	(2) AIR SEATS WITH CORDURA CLOTH	$3,915.00	$0.00	$3,954.15
0	1115658	(2) FRONT CAMERAS (1) REAR CAMERA	$960.00	$0.00	$969.60
0	1120361	EXTENDED REACH RIGHT HAND SIDEBROOM (**MUST SELECT IN CAB HYDRAULIC FLOAT SIDEBROOMS**)	$1,345.00	$0.00	$1,358.45
0	1120782	EXTENDED REACH RIGHT AND LEFT HAND SIDEBROOMS (**MUST SELECT IN CAB HYDRAULIC FLOAT SIDEBROOMS)**	$1,890.00	$0.00	$1,908.90
		-----NAVISTAR CHASSIS OPTIONS-----			
0	4820001	CAB STANDARD WHITE	N/C	$0.00	N/C
0	1063731	NAV CAB PAINTED SPECIAL COLOR	$3,635.00	$0.00	$3,671.35
0	1108053	FULL WIDTH FRONT SPRAY BAR	$975.00	$0.00	$984.75
0	SPECIAL	TRUCK RIMS - ALL	$1,140.00	$0.00	$1,151.40
0	SPECIAL	SPARE TIRE & WHEEL, BALANCED	$1,315.00	$0.00	$1,328.15
0	1086733	LEFT HAND FENDER MOUNTED MIRROR	$505.00	$0.00	$510.05
0	1101567	2 1/2 LB. FIRE EXTINGUISHER	$210.00	$0.00	$212.10
0	1101568	5 LB. FIRE EXTINGUISHER	$240.00	$0.00	$242.40
0	1091761	EXTRA KEY	$55.00	$0.00	$55.55
0	1091770	(2) ELECTRIC & (1) AIR HORN	$1,870.00	$0.00	$1,888.70
0	1091822	AM/FM/CD RADIO	$890.00	$0.00	$898.90
0	1097641	NATIONAL AIR RIDE SEAT - PASSENGER SIDE - VINYL	$2,325.00	$0.00	$2,348.25
0	1097642	NATIONAL AIR RIDE SEAT-PASSENGER SIDE- VINYL W/ARM REST	$2,480.00	$0.00	$2,504.80
0	1097643	NATIONAL AIR RIDE SEAT-PASSENGER SIDE - CLOTH	$2,200.00	$0.00	$2,222.00
0	1097644	NATIONAL AIR RIDE SEAT-PASSENGER SIDE - CLOTH W/ARM REST	$2,340.00	$0.00	$2,363.40

0	1097645	NATIONAL AIR RIDE SEAT - DRIVER SIDE - VINYL	$2,060.00	$0.00	$2,080.60
0	1097646	NATIONAL AIR RIDE SEAT - DRIVER SIDE - VINYL W/ARM REST	$2,200.00	$0.00	$2,222.00
0	1097647	NATIONAL AIR RIDE SEAT - DRIVER SIDE - CLOTH	$2,200.00	$0.00	$2,222.00
0	1097648	NATIONAL AIR RIDE SEAT - DRIVER SIDE - CLOTH W/ARM REST	$2,525.00	$0.00	$2,550.25
0	1099317	(1) ELECTRIC HORN	$285.00	$0.00	$287.85
0	1120361	EXTENDED REACH RIGHT HAND SIDEBROOM (**MUST SELECT IN CAB HYDRAULIC FLOAT SIDEBROOMS**)	$1,345.00	$0.00	$1,358.45
0	1120782	EXTENDED REACH RIGHT AND LEFT HAND SIDEBROOMS (**MUST SELECT IN CAB HYDRAULIC FLOAT SIDEBROOMS)**	$1,890.00	$0.00	$1,908.90

MODEL: BROOM BEAR

SUPERCEDES ALL PREVIOUS PRICE LISTS
PRICE LIST (U.S. DOLLARS)

QUANTITY	PART NUMBER	MODEL DESCRIPTION	2016 PRICE	2016 EXTENDED	2017 MIDeal PRICE
		-----FREIGHT RATES-----			
0	FRT-118-001	SELF SHIPPING DOCK CHARGE	$595.00	$0.00	
0	FRT-118-002	FREIGHT-IL,WI,IA,IN,MI,MN,KY	$1,310.00	$0.00	
0	FRT-118-003	FREIGHT-TN,WV,PA,NY	$2,850.00	$0.00	
0	FRT-118-004	FREIGHT-NH,VT,ME	$3,555.00	$0.00	
0	FRT-118-005	FREIGHT-NEW YORK CITY	$4,110.00	$0.00	
0	FRT-118-006	FREIGHT-ND,SD,NE,OK,KS,AR,AL,MO	$2,715.00	$0.00	
0	FRT-118-007	FREIGHT-AZ,UT	$5,390.00	$0.00	
0	FRT-118-008	FREIGHT-CA,NV,ID,OR,WA	$6,355.00	$0.00	
0	FRT-118-009	FREIGHT-CHICAGO/MILWAUKEE	$900.00	$0.00	
0	FRT-118-010	FREIGHT - FL,LA,TX,NM,CO,WY,MT	$4,145.00	$0.00	
0	FRT-118-011	FREIGHT- OH,ST.LOUIS METRO	$1,530.00	$0.00	
0	FRT-118-012	FREIGHT- MS,GA,SC,NC,VA,MD	$3,130.00	$0.00	
0	FRT-118-013	FREIGHT - RI,DE,CT,NJ,MA	$2,740.00	$0.00	
0	FRT-118-014	FREIGHT - LAREDO, TX	$6,700.00	$0.00	
0	FRT-118-015	SPECIALIZED TRANSPORT EQUIPMENT	$1,030.00	$0.00	
		---------WARRANTY---------			
0	EW-ME-NA-2PL	BROOM BEAR 2ND YEAR PARTS/LABOR	$2,650.00	$0.00	$2,705.00
0	EW-ME-NA-3PL	BROOM BEAR 3RD YEAR PARTS ONLY	$4,995.00	$0.00	$5,100.00
0	EW-ME-NA-4PL	BROOM BEAR 4TH YEAR PART/LABOR	$7,105.00	$0.00	$7,250.00
0	EW-ME-NA-5PL	BROOM BEAR 5TH YEAR PARTS/LABOR	$9,100.00	$0.00	$9,290.00
			SUB TOTAL	**$0.00**	
		-----DISCOUNTS-----			
0	DISC-118-ADDL	DISCOUNT	$0.00	$0.00	

SPECIAL RFQ OPTIONS OR OTHER DESCRIPTIONS

GRAND TOTAL	**$0.00**

This is Bell Equipment's 9/15/16 price list for the MIDeal quote

MODEL: CROSSWIND SHARED POWER TIER 4F
EFFECTIVE DATE: 10/03/2016
SUPERCEDES ALL PREVIOUS PRICE LISTS
PRICE LIST (U.S. DOLLARS)

Purchase Order #	
Order Date:	
Delivery Date Requirment If Any:	

Ship To Address:
State Penalty Clause If Applicable:

QUANTITY	PART NUMBER	MODEL DESCRIPTION	2016 PRICE	2016 EXTENDED	2017 MIDeal PRICE
		ECOINFUSED TIER 4F ENGINES			
0	1118453	**CROSSWIND - DUAL TIER 4F 74HP - AUOTCAR**	$117,250	$0.00	$123,112.50
		Equipped with MemorySweep®; Tier 4F emissions, John Deere 4045, Turbocharged diesel engine, 8.0 cu. Yd. Hopper, right and left side brooms, sweeper is powder coated from powder coatings chart 2003/N with powder coated gray undercarriage and includes the standard features listed below.			
0	1120745	**CROSSWIND - DUAL TIER 4F 74HP - M2**	$117,250	$0.00	$123,112.50
		Equipped with MemorySweep®; Tier 4F emissions, John Deere 4045, Turbocharged diesel engine, 8.0 cu. Yd. Hopper, right and left side brooms, sweeper is powder coated from powder coatings chart 2003/N with powder coated gray undercarriage and includes the standard features listed below.			
0	1120890	**CROSSWIND - DUAL TIER 4F 74HP - PETERBILT**	$117,250	$0.00	$123,112.50
		Equipped with MemorySweep®; Tier 4F emissions, John Deere 4045, Turbocharged diesel engine, 8.0 cu. Yd. Hopper, right and left side brooms, sweeper is powder coated from powder coatings chart 2003/N with powder coated gray undercarriage and includes the standard features listed below.			
0	1120891	**CROSSWIND - DUAL TIER 4F 74HP - IH**	$117,250	$0.00	$123,112.50
		Equipped with MemorySweep®; Tier 4F emissions, John Deere 4045, Turbocharged diesel engine, 8.0 cu. Yd. Hopper, right and left side brooms, sweeper is powder coated from powder coatings chart 2003/N with powder coated gray undercarriage and includes the standard features listed below.			
		CHASSIS			
0	1119499	2016 AUTOCAR XPERT 2013E (NON STOCKED CHASSIS)	CONTACT FACTORY	$0.00	
0	1115593	2014 AUTOCAR XPERT 2010E SINGLE SPEED REAR AXLE	CONTACT FACTORY	$0.00	
0	SPECIAL	CANADIAN COMPLIANCE AND DAYTIME RUNNING LIGHTS FOR AUTOCAR CHASSIS	$725	$0.00	
0	1119154	2016 M2 DUAL STEER (2013 EMISSIONS) SHARED POWER 74HP	CONTACT FACTORY	$0.00	
0	1118814	2016 PETERBILT RIGHT HAND STEER (NON STOCKED CHASSIS) SINGLE SPEED REAR AXLE	CONTACT FACTORY	$0.00	
0	1120412	2016 PETERBILT DUAL STEER (NON STOCKED CHASSIS) SINGLE SPEED REAR AXLE	CONTACT FACTORY	$0.00	
0	1120413	2016 IH DUAL STEER (NON STOCKED CHASSIS)	CONTACT FACTORY	$0.00	
		CHASSIS MOUNTING CHARGE			
0	SPECIAL	M2 CHASSIS - CHASSIS ALTERATIONS	$2,135	$0.00	
0	1119001	AUTOCAR XPERT 164" WB - CHASSIS ALTERATIONS	$2,135	$0.00	
0	SPECIAL	PETERBILT CHASSIS - CHASSIS ALTERATIONS	$2,135	$0.00	
0	SPECIAL	INTERNATIONAL CHASSIS - CHASSIS ALTERATIONS	$2,135	$0.00	
0	SPECIAL	CUSTOMER SUPPLIED CHASSIS ALTERATIONS	CONTACT INSIDE SALES	$0.00	
0	SPECIAL	CUSTOMER SUPPLIED HANDLING CHARGE	$2,815	$0.00	

NOTE: Customer Supplied Chassis requires both the Chassis Alterations and the Handling Charge

		APPLICATION - SPECIFIC PACKAGES			
0	SPECIAL	**CROSSWIND DUAL FSX PACKAGE**	CONTACT INSIDE SALES	$0.00	
		Equipped with FSX pickup head ILO the standard Crosswind pickup head, 11" diameter suction hose and polypropylene side broom segments.			
0	SPECIAL	**CROSSWIND DUAL GRS PACKAGE**	$11,295	$0.00	$11,407.95
		Equipped with hydraulic pump off system and fan Flow Blocker to aid in fast unloading of glycol.			
1	4820001	PAINT CAB STANDARD WHITE	N/C	$0.00	N/C
1	4810001	PAINT SWEEPER STANDARD WHITE	N/C	$0.00	N/C

NOTE: A BODY includes the cost of Elgin standard white finish paint. It does not however, include the price of the chassis.

NOTE: The chassis being supplied by a customer or dealer **must** comply completely with all Elgin requirements or the chassis will be modified at dealer's expense.

NOTE: For cost of sweeper mounted on any other chassis, consult factory.

NOTE: One year warranty on all Elgin supplied parts and labor. Consult your Elgin dealer for full warranty details.

MODEL: CROSSWIND SHARED POWER TIER 4F

SUPERCEDES ALL PREVIOUS PRICE LISTS
PRICE LIST (U.S. DOLLARS)

QUANTITY	PART NUMBER	MODEL DESCRIPTION	2016 PRICE	2016 EXTENDED	2017 MIDeal PRICE

STANDARD FEATURES

1	0702253	CROSSWIND SHARED POWER 74HP PARTS MANUAL	STANDARD	$0.00
1	0701674	CROSSWIND SHARED POWER 74HP OPERATORS MANUAL	STANDARD	$0.00
1	0704046	JOHN DEERE OPERATORS	STANDARD	$0.00
1	0704047	JOHN DEERE PARTS	STANDARD	$0.00
1	0730166	BROOM MEASUREMENT RULER	STANDARD	$0.00
1	1032481	16' 8" WATER FILL HOSE	STANDARD	$0.00
1	0701705	MACHINE DELIVERY PACKET	STANDARD	$0.00
1	0702020	ELGIN SAFETY MANUAL	STANDARD	$0.00

Patent-pending Shared Power system
Alternator, 95 amp
Auto Shutdown, Aux. Engine
Backup Alarm, electric
Blower, HARDOX®500 steel with linatex lined housing
Brooms, hydraulic rotation
Brooms, Dual
Camera, rear mounted
Console, w/rocker switches for all sweep functions, with full gauge package including tachometer, engine hour meter, oil pressure indicator, coolant temperature, voltmeter and fuel lever indicator, water level gauge and warning lights for hopper "up", hopper rear door "open" and hopper "full", with auxiliary engine, RPM control, side broom down pressure controls and automotive style blade fuses
Doors, access fiberglass doors provide easy service and maintenance on auxiliary engine, hydraulic and electrical system
Electronic Actuated Throttle, sweep resume/sweep transport/reverse pick-up
Fuel Water Separator on Aux Engine
Hopper rear door, hydraulically opened/closed and locked/unlocked with external manual controls
Hose, hydrant fill, 16'8" (5080 mm) with coupling
LED Clearance Lights
Lights; rear clearance and rear identification
Manuals, operator and parts
Mirrors, West Coast type with 8" convex inserts, one each side
Pick-up head, hydraulically operated, 14" (355 mm) outside diameter pressure hose, 12-3/4" (324mm) inside diameter suction hose with quick disconnect on suctions side
Water system; one (1) rocker switch with HI / LOW setting, with manual valves for water control
Spray nozzles, sixteen (16), seven (7) in the pick-up head, three (3) in the suction nozzle, three (3) at each side broom
Side Broom Outer Position Stop
Trans Oil Cooler
Vacuum enhancer, external manually operated
Water tank, molded polyethylene, 240 gallons (907L)
Water pre-filter, hydrant fill hose

		MEMORY SWEEP® HAS BEEN SELECTED			
1	1120875	***MEMORY SWEEP®	$2,630.00	$2,630.00	$2,656.30
		ELGIN SWEEPER EXCLUSIVE SWEEP RESUME FEATURE; Provides in-cab feedback for operator awareness of sidebroom tilt angle, vacuum enchancer percent open/close and one switch sweep resume of sweep functions. Elgin's optional Memory Sweep ® system allows the operator to resume all previous sweep settings, even broom tilt (if so equipped), with one touch control. This feature enhances productivity and reduces fatigue. Memory Sweep incorporates a multi-screen display that indicates system diagnostics as well as optional features such as broom tilt angle, vacuum enhancer position, and broom hours.			

MODEL: CROSSWIND SHARED POWER TIER 4F

SUPERCEDES ALL PREVIOUS PRICE LISTS
PRICE LIST (U.S. DOLLARS)

QUANTITY	PART NUMBER	MODEL DESCRIPTION	2016 PRICE	2016 EXTENDED	2017 MIDeal PRICE
S T E P	# 2	SELECT PRODUCT ENHANCEMENTS			
		--------SWEEPER COMPONENTS---------			
0	1114911	***BROOM HOURS **WITH IN-CAB DISPLAY**	$115.00	$0.00	$116.15
0	1119215	***VACUUM ENHANCER IN-CAB CONTROL **WITH IN-CAB DISPLAY**	$465.00	$0.00	$469.65
		----------SIDE BROOMS OPTIONS----------			
0	1111176	RIGHT HAND GUTTER BROOM TILT **WITH IN-CAB DISPLAY**	$1,100.00	$0.00	$1,111.00
0	1111175	LEFT HAND GUTTER BROOM TILT **WITH IN-CAB DISPLAY**	$1,100.00	$0.00	$1,111.00
0	1113732	VARIABLE SPEED - DUAL SIDEBROOMS	$3,285.00	$0.00	$3,317.85
		ALL WORK & FLOOD LIGHTS ARE EACH CONTROLLED USING INDIVIDUAL ROCKER SWITCHES			
		NOTE: Sidebroom Lights are NOT STANDARD			
0	SPECIAL	***INDVDUAL SWITCHES FOR DUAL SIDEBROOM LIGHTS	$605.00	$0.00	$611.05
0	SPECIAL	INDIVIDUAL SWITCHES FOR DUAL REAR FLOOD LIGHTS	$630.00	$0.00	$636.30
0	SPECIAL	INDIVIDUAL SWITCHES FOR DUAL SIDEBROOM & REAR FLOOD LIGHTS	$1,235.00	$0.00	$1,247.35
0	1120822	INDVIDUAL SWITCHES FOR DUAL SIDEBROOM LIGHTS-LED	$745.00	$0.00	$752.45
0	1120823	INDVIDUAL SWITCHES FOR RIGHT HAND SIDEBROOM LIGHT-LED	$685.00	$0.00	$691.85
0	1120824	INDIVIDUAL SWITCHES FOR DUAL REAR FLOOD LIGHTS-LED	$855.00	$0.00	$863.55
0	1120825	INDIVIDUAL SWITCHES FOR DUAL SIDEBROOM & REAR FLOOD LTS-LED	$1,595.00	$0.00	$1,610.95
		-----WATER SYSTEM (CHOOSE UP TO ONE)-----			
0	1110823	FUNCTIONAL CONTROL OF WATER SYSTEM	$725.00	$0.00	$732.25
		FUNCTIONAL CONTROL OF WATER SYSTEM dispenses water with the use of the sweeper function rocker switch. Not compatible with Individual control water system. Not compatibale with PM-10 water system.			
		OR			
0	1113730	***INDIVIDUAL SWITCHES FOR WATER SYSTEM CONTROL **(NOT COMPATIBLE WITH PM10)**	$1,340.00	$0.00	$1,353.40
		----------SIDE BROOMS----------			
0	1112947	***DUAL SIDE BROOM SCRUBBING POSITION	$1,725.00	$0.00	$1,742.25
		SIDE BROOM SCRUBBING POSITION provides additional switch on console to allow the side brooms to sweep inboard in front of the pickup head in the scrubbing position.			
		------HOPPER OPTIONS------			
0	1119059	***IN-CAB HOPPER DUMP	$805.00	$0.00	$813.05

MODEL: CROSSWIND SHARED POWER TIER 4F

SUPERCEDES ALL PREVIOUS PRICE LISTS
PRICE LIST (U.S. DOLLARS)

QUANTITY	PART NUMBER	MODEL DESCRIPTION	2016 PRICE	2016 EXTENDED	2017 MIDeal PRICE
STEP	# 3	SELECT OPTIONS / ACCESSORIES			
		--------ALARMS----------			
0	SPECIAL	BACKUP ALARM, SMART	$400.00	$0.00	$404.00
		-----AUTO LUBE-----			
0	1120877	AUTO LUBE SWEEPER ONLY	$4,245.00	$0.00	$4,287.45
		---------BROOMS----------			
0	1078904	DUAL POLY BROOMS	$215.00	$0.00	$217.15
		------DECALS------			
1	1090150	RED LOGO/CROSSWIND	N/C	$0.00	
0	1090153	WHITE LOGO/CROSSWIND	N/C	$0.00	
		---------GAUGES----------			
0	1061886	HYDRAULIC OIL LEVEL GUAGE W/THERMOMETER	$180.00	$0.00	$181.80
		------HOPPER OPTIONS------			
0	1085864	RIGHT HAND INSPECTION DOOR	$430.00	$0.00	$434.30
0	1085882	LEFT HAND INSPECTION DOOR	$430.00	$0.00	$434.30
0	1085883	RIGHT HAND INSPECTION DOOR & STEP	$765.00	$0.00	$772.65
0	1085884	LEFT HAND INSPECTION DOOR & STEP	$765.00	$0.00	$772.65
0	1085887	6" HOPPER DRAIN	$810.00	$0.00	$818.10
		----STAINLESS STEEL HOPPER------			
0	1071234	STAINLESS STEEL HOPPER SCREENS	$1,530.00	$0.00	$1,545.30
0	1101937	STAINLESS STEEL RIGHT HAND INSPECTION DOOR & STEP	$785.00	$0.00	$792.85
0	1101938	STAINLESS STEEL LEFT HAND INSPECTION DOOR & STEP	$785.00	$0.00	$792.85
0	1119271	STAINLESS STEEL HOPPER DOOR WITH HOPPER DELUGE	$1,010.00	$0.00	$1,020.10
0	RFQ 54131	STAINLESS STEEL 304 HOPPER/HOPPER DOOR/HARDWARE **SS SCREENS NOT INCLUDED**	$15,745.00	$0.00	$15,902.45
0	RFQ 54132	STAINLESS STEEL 304 HOPPER/HOPPER DOOR/HARDWARE/6" DRAIN **SS SCREENS NOT INCLUDED**	$16,900.00	$0.00	$17,069.00
		-----LIFELINER HOPPER----			
0	1092227	LIFELINER HOPPER SYSTEM W/WARRANTY	$7,815.00	$0.00	$7,893.15
		-----MANUALS----			
0	0702253	CROSSWIND SHARED POWER 74HP PARTS MANUAL	$95.00	$0.00	$95.95
0	0701674	CROSSWIND SHARED POWER 74HP OPERATORS MANUAL	$50.00	$0.00	$50.50
0	0702485	CROSSWIND SHARED POWER 74HP SERVICE MANUAL	$95.00	$0.00	$95.95
0	0704046	JOHN DEERE OPERATORS	$40.00	$0.00	$40.40
0	0704047	JOHN DEERE PARTS	$52.00	$0.00	$52.52
0	0704048	JOHN DEERE SERVICE	$148.00	$0.00	$149.48
		-----LIGHTING-----			
0	1121132	WIRE/MOUNT REAR	$405.00	$0.00	$409.05
0	1121133	WIRE/MOUNT REAR W/GUARD	$630.00	$0.00	$636.30
0	SPECIAL	WIRE/MOUNT REAR BEACON W/GUARD	$630.00	$0.00	$636.30
0	SPECIAL	WIRE/MOUNT REAR STROBE W/GUARD	$715.00	$0.00	$722.15
0	1121098	(2) REAR LED BEACONS **(USE W/WANDERING HOSE)**	$1,420.00	$0.00	$1,434.20
0	1121099	(2) REAR LED BEACONS **(USE W/O WANDERING HOSE)**	$1,420.00	$0.00	$1,434.20
0	SPECIAL	REAR LED ARROWBOARD	$2,555.00	$0.00	$2,580.55
0	SPECIAL	REAR BEACON / ARROWBOARD	$2,175.00	$0.00	$2,196.75
0	SPECIAL	REAR STROBE / ARROWBOARD	$2,155.00	$0.00	$2,176.55
0	1121121	REAR LED BEACON / LED ARROWBOARD	$2,920.00	$0.00	$2,949.20
0	SPECIAL	REAR STROBE / LED ARROWBOARD	$2,755.00	$0.00	$2,782.55
0	1117011	(2) REAR BUMPER MOUNTED STROBES **(MUST SELECT ONE "INDVDUAL SWITCHES WORK LIGHT OPTION")**	$1,085.00	$0.00	$1,095.85
0	SPECIAL	(2) ALTERNATING FLASHING REAR LIGHTS **(MUST SELECT ONE "INDVDUAL SWITCHES WORK LIGHT OPTION")**	$845.00	$0.00	$853.45
0	1121096	REAR LED BEACON / LED ARROWSTICK	$2,785.00	$0.00	$2,812.85
0	SPECIAL	REAR STROBE / LED ARROWSTICK	$2,540.00	$0.00	$2,565.40
0	SPECIAL	LED ARROWSTICK	$2,190.00	$0.00	$2,211.90
0	1121066	(2) REAR LED BEACONS / LED ARROWSTICK **(USE W/WANDERING HOSE)**	$3,680.00	$0.00	$3,716.80
0	1121067	(2) REAR LED BEACONS / LED ARROWSTICK **(USE W/O WANDERING HOSE)**	$3,680.00	$0.00	$3,716.80
0	SPECIAL	(2) REAR STROBES / LED ARROWSTICK **(USE W/WANDERING HOSE)**	$3,175.00	$0.00	$3,206.75
0	SPECIAL	(2) REAR STROBES / LED ARROWSTICK **(USE W/O WANDERING HOSE)**	$3,175.00	$0.00	$3,206.75
0	1120887	REAR LED BEACON	$920.00	$0.00	$929.20

MODEL: CROSSWIND SHARED POWER TIER 4F

SUPERCEDES ALL PREVIOUS PRICE LISTS
PRICE LIST (U.S. DOLLARS)

QUANTITY	PART NUMBER	MODEL DESCRIPTION	2016 PRICE	2016 EXTENDED	2017 MIDeal PRICE
		----------PAINT----------			
0	4811018	PAINT SWEEPER YELLOW RAL 1018	$510.00	$0.00	$515.10
0	4811023	PAINT SWEEPER YELLOW RAL 1023	$510.00	$0.00	$515.10
0	4811037	PAINT SWEEPER YELLOW RAL 1037	$510.00	$0.00	$515.10
0	4813020	PAINT SWEEPER TRAFFIC RED RAL 3020	$510.00	$0.00	$515.10
0	SPECIAL	PAINT SWEEPER OTHER RAL THAN ABOVE	$1,250.00	$0.00	$1,262.50
0	SPECIAL	PAINT SWEEPER NON RAL COLOR	$3,790.00	$0.00	$3,827.90
		---------PM10 COMPLIANCE----------			
0	1120896	PM-10 WATER SYSTEM **(NOT COMPATIBLE WITH FUNCTIONAL OR INDIVIDUAL WATER SYSTEM)**	$2,960.00	$0.00	$2,989.60
0	1119000	PM-10 WATER SYSTEM USE WITH CENTERBROOM **(NOT COMPATIBLE WITH FUNCTIONAL OR INDIVIDUAL WATER SYSTEM)**	$2,960.00	$0.00	$2,989.60
		----------SAFETY---------			
0	1048643	SLOW MOVING VEHICLE SIGN	$150.00	$0.00	$151.50
0	5007219	HYDRAULIC JACK, 5 TON	$260.00	$0.00	$262.60
0	9306848	TRIANGLE REFLECTOR FLARES (3)	$75.00	$0.00	$75.75
0	1095548	LEFT HAND SIDE CAMERA	$575.00	$0.00	$580.75
		-----SWEEP COMPONENTS-----			
0	SPECIAL	AIR SUPPLY HOSE	$410.00	$0.00	$414.10
0	1121225	CENTERBROOM	$4,740.00	$0.00	$4,787.40
		-----SWEEPER ENGINE-------			
0	SPECIAL	BATTERY DISCONNECT SWITCH	$495.00	$0.00	$499.95
0	1120793	TURBO II PRECLEANER	$485.00	$0.00	$489.85
0	SPECIAL	AUX ENGINE PRE-CLEANER	$575.00	$0.00	$580.75
0	SPECIAL	1000 WATT BLOCK HEATER	$430.00	$0.00	$434.30
0	6063004	ADDITIONAL IGNITION KEY	$45.00	$0.00	$45.45
0	1121514	AUXILIARY HYDRAULIC PUMP USE **WITH** IN-CAB HOPPER DUMP [SHARED POWER]	$1,350.00	$0.00	$1,363.50
0	1121515	AUXILIARY HYDRAULIC PUMP **USE WITHOUT** IN-CAB HOPPER DUMP [SHARED POWER]	$1,350.00	$0.00	$1,363.50
		-------TOOLS/TOOL BOX-----			
0	1036150	HYDRANT WRENCH	$85.00	$0.00	$85.85
0	1053426	TOOL KIT	$735.00	$0.00	$742.35
0	1057687	TOOL BOX W/TOOLS	$710.00	$0.00	$717.10
		-----WANDERING HOSE-----			
0	1119217	HYDRAULIC WANDERING HOSE	$4,700.00	$0.00	$4,747.00
0	1120863	HYDRAULIC WANDERING HOSE **(USE W/VARIABLE SPEED)**	$4,700.00	$0.00	$4,747.00
0	1059263	4 FT. ALUMINUM WANDERING HOSE EXTENSION - REAR MOUNT	$750.00	$0.00	$757.50
0	1063656	(2) 4 FT. ALUMINUM WANDERING HOSE EXTENSION REAR MOUNT	$1,520.00	$0.00	$1,535.20
		-----WATER SYSTEM---------			
0	1032484	25' WATER FILL HOSE (ILO 16' 8")	$190.00	$0.00	$191.90
0	1040094	QUICK DISCONNECT WATER FILL	$505.00	$0.00	$510.05
0	1059209	HOPPER DELUGE	$1,010.00	$0.00	$1,020.10
0	1088582	HOPPER WATER NOZZLES	$555.00	$0.00	$560.55
0	1061652	ANTI SIPHON 2-1/2" AIR GAP **(NOT COMPATIALBE W/EXTRA WATER TANKS)**	$180.00	$0.00	$181.80
0	SPECIAL	SPRAY NOZZLES FOR CENTERBROOM	$520.00	$0.00	$525.20
0	1070059	AIR PURGE FOR WATER SYSTEM	$375.00	$0.00	$378.75
0	1120809	LOW PRESSURE WASH DOWN **(NOT COMPATIBLE WITH PM 10)**	$1,170.00	$0.00	$1,181.70
0	SPECIAL	HIGH PRESSURE WASHDOWN **(USE W/CENTERBROOM)**	$4,275.00	$0.00	$4,317.75
0	SPECIAL	HIGH PRESSURE WASHDOWN	$4,550.00	$0.00	$4,595.50
0	1100507	AIR PURGE FOR WATER SYSTEM **(USE W/PM10)**	$385.00	$0.00	$388.85
		------WIRE MOUNT----------			
0	SPECIAL	WIRE/MOUNT REAR	$395.00	$0.00	$398.95
0	SPECIAL	WIRE/MOUNT RIGHT & LEFT REAR **(USE W/WANDERING HOSE)**	$925.00	$0.00	$934.25
0	SPECIAL	WIRE/MOUNT R&L REAR **(USE W/OUT WANDERING HOSE)**	$925.00	$0.00	$934.25
0	SPECIAL	WIRE MOUNT R&L REAR BEACON **(USE W/WANDERING HOSE)**	$1,240.00	$0.00	$1,252.40
0	SPECIAL	WIRE MOUNT R&L REAR BEACON **(USE W/OUT WANDERING HOSE)**	$1,070.00	$0.00	$1,080.70

QUANTITY	PART NUMBER	MODEL DESCRIPTION	2016 PRICE	2016 EXTENDED	2017 MIDeal PRICE
		---- INTERNATIONAL CHASSIS OPTIONS----			
0	1117228	2 1/2 LB. FIRE EXTINGUISHER	$210.00	$0.00	$212.10
0	1091822	RADIO AM/FM/CD	$890.00	$0.00	$898.90
0	1117229	5 LB. FIRE EXTINGUISHER	$235.00	$0.00	$237.35
0	1070639	LED / STOP / TAIL / REAR TURN LIGHT	$615.00	$0.00	$621.15
0	1111698	FRONT SPRAY BAR	$525.00	$0.00	$530.25
0	1111756	FRONT SPRAY BAR (USE W/PM10)	$685.00	$0.00	$691.85
0	1121177	CAB / (2) REAR LED BEACON (USE W/WANDERING HOSE	$2,585.00	$0.00	$2,610.85
0	1121178	CAB / (2) REAR LED BEACON (USE W/ OUT WANDERING HOSE	$2,585.00	$0.00	$2,610.85
		----- M2 CHASSIS OPTIONS -----			
0	0704005	M2 PARTS BOOK	$405.00	$0.00	$409.05
0	0704006	M2 OPERATOR BOOK	$50.00	$0.00	$50.50
0	0704007	M2 SERVICE MANUAL	$350.00	$0.00	$353.50
0	1063734	CAB PAINT	$3,775.00	$0.00	$3,812.75
0	1070639	LED/STOP/TAIL/REAR TURN LIGHT	$615.00	$0.00	$621.15
0	1071626	PAINT TRUCK RIMS	$1,165.00	$0.00	$1,176.65
0	1075400	AM/FM/CD RADIO	$890.00	$0.00	$898.90
0	1080756	LEFT HAND FENDER MOUNTED MIRROR	$505.00	$0.00	$510.05
0	1109607	12" CONVEX MIRRORS	$315.00	$0.00	$318.15
0	1081188	EXTRA KEY	$45.00	$0.00	$45.45
0	1081745	(2) BOSTROM 905 VINYL MID-BACK	$1,815.00	$0.00	$1,833.15
0	1081746	(1) BOSTROM 905 VINYL MID-BACK	$890.00	$0.00	$898.90
0	1081747	(2) BOSTROM AIR 905 CLOTH HI-BACK	$2,010.00	$0.00	$2,030.10
0	1081748	BOSTROM AIR 905 CLOTH HI-BACK	$1,035.00	$0.00	$1,045.35
0	1081901	SPARE TIRE & WHEEL , BALANCED	$1,315.00	$0.00	$1,328.15
0	1081909	SINGLE ARM REST - VINYL **(ONLY W/AIR RIDE SEATS)**	$360.00	$0.00	$363.60
0	1081910	DUAL ARM REST - VINYL **(ONLY W/AIR RIDE SEATS)**	$680.00	$0.00	$686.80
0	1081911	SINGLE ARM REST - CLOTH **(ONLY W/AIR RIDE SEATS)**	$360.00	$0.00	$363.60
0	1081912	DUAL ARM REST - CLOTH **(ONLY W/AIR RIDE SEATS)**	$680.00	$0.00	$686.80
0	1082931	AIR RESTRICTOR GUAGE	$970.00	$0.00	$979.70
0	SPECIAL	WIRE/MOUNT CAB / REAR	$1,005.00	$0.00	$1,015.05
0	SPECIAL	BEACON CAB / REAR W/WIRE MOUNT	$1,435.00	$0.00	$1,449.35
0	SPECIAL	STROBES CAB / REAR W/WIRE MOUNT	$1,720.00	$0.00	$1,737.20
0	1111698	FRONT SPRAY BAR **(NOT COMPATIBLE WITH THE STANDARD WATER SYSTEM)**	$540.00	$0.00	$545.40
0	1111756	FRONT SPRAY BAR **(USE W/PM-10)** **(NOT COMPATIBLE WITH THE STANDARD WATER SYSTEM)**	$700.00	$0.00	$707.00
0	1090653	DUAL AIR HORN	$1,560.00	$0.00	$1,575.60
0	1118356	2 1/2 LB. FIRE EXTINGUISHER	$210.00	$0.00	$212.10
0	1118357	5 LB. FIRE EXTINGUUISHER	$235.00	$0.00	$237.35
0	SPECIAL	AUTO LUBE TRUCK/SWEEPER	$7,055.00	$0.00	$7,125.55
0	SPECIAL	CAB & (2) REAR BEACONS **(USE W/ WANDERING HOSE)**	$1,975.00	$0.00	$1,994.75
0	SPECIAL	CAB & (2) REAR BEACONS **(USE W/O WANDERING HOSE)**	$1,975.00	$0.00	$1,994.75
0	SPECIAL	CAB & (2) REAR STROBES **(USE W/ WANDERING HOSE)**	$2,155.00	$0.00	$2,176.55
0	SPECIAL	CAB & (2) REAR STROBES **(USE W/O WANDERING HOSE)**	$2,155.00	$0.00	$2,176.55
0	1121151	CAB / REAR LED STROBE / LED ARROWSTICK	$3,565.00	$0.00	$3,600.65
0	1121152	CAB / REAR WIRE/MOUNT/ LED ARROWSTICK	$3,400.00	$0.00	$3,434.00
0	1121162	WIRE/MOUNT CAB & REAR	$945.00	$0.00	$954.45
0	1121163	WIRE/MOUNT CAB & REAR W/GUARD	$1,400.00	$0.00	$1,414.00
0	1121164	LED BEACON CAB & REAR	$2,300.00	$0.00	$2,323.00
0	SPECIAL	STROBE CAB & REAR WITH ARROWBOARD	$2,680.00	$0.00	$2,706.80
0	SPECIAL	LED STROBE CAB/REAR	$2,045.00	$0.00	$2,065.45
0	1072443	BATTERY DISCONNECT	$520.00	$0.00	$525.20
		----PETERBILT CHASSIS OPTIONS----			
0	1119463	FRONT SPRAY BAR **(NOT COMPATIBLE WITH THE STANDARD WATER SYSTEM)**	$540.00	$0.00	$545.40
0	1119464	FRONT SPRAY BAR **(USE W/PM-10)** **(NOT COMPATIBLE WITH THE STANDARD WATER SYSTEM)**	$700.00	$0.00	$707.00
0	1120883	17" WORK PLATFORM **(NOT COMPATIABLE W/EXTRA WATER TANK)**	$3,215.00	$0.00	$3,247.15
0	1120869	CAB & (2) REAR STROBES **(USE W/ WANDERING HOSE)**	$2,315.00	$0.00	$2,338.15
0	1120870	CAB & (2) REAR STROBES **(USE W/O WANDERING HOSE)**	$2,315.00	$0.00	$2,338.15

MODEL: CROSSWIND SHARED POWER TIER 4F

SUPERCEDES ALL PREVIOUS PRICE LISTS
PRICE LIST (U.S. DOLLARS)

QUANTITY | PART NUMBER | MODEL DESCRIPTION | 2016 PRICE | 2016 EXTENDED | 2017 MIDeal PRICE

----AUTOCAR XPERT CHASSIS OPTIONS----

0	SPECIAL	2014 AUTOCAR SERVICE MANUAL 2013 EMISSIONS - CD	$640.00	$0.00	$646.40
0	1111468	LED/STOP/TURN/TAIL LIGHTS	$615.00	$0.00	$621.15
0	SPECIAL	BATTERY DISCONNECT	$1,300.00	$0.00	$1,313.00
0	SPECIAL	DUAL UNDERCAB AIR HORN	$1,295.00	$0.00	$1,307.95
0	SPECIAL	AUTO AIR DRAIN VALVE	$820.00	$0.00	$828.20
0	SPECIAL	ISRI HT914 HIGH BACK, AIR RIDE, RIGHT HAND	$2,030.00	$0.00	$2,050.30
0	SPECIAL	ISRI HT914 HIGH BACK, AIR RIDE, LEFT HAND	$2,030.00	$0.00	$2,050.30
0	SPECIAL	IN CAB AIR FILTER RESTRICTION INDICATOR	$525.00	$0.00	$530.25
0	SPECIAL	DAYTIME RUNNING LIGHTS	$515.00	$0.00	$520.15
0	1121194	CAB / (2) REAR LED BEACON / ARROWSTICK **(USE W/ANDERING HOSE)**	$3,795.00	$0.00	$3,832.95
0	1121195	CAB / (2) REAR LED BEACON / ARROWSTICK **(USE W/O WANDERING HOSE)**	$3,795.00	$0.00	$3,832.95
0	1121172	CAB / (2) REAR LED BEACON **(USE W/ANDERING HOSE)**	$2,585.00	$0.00	$2,610.85
0	1121173	CAB / (2) REAR LED BEACON **(USE W/O WANDERING HOSE)**	$2,585.00	$0.00	$2,610.85
0	SPECIAL	WIRE / MOUNT - CAB/FRONT ; HOPPER/REAR	$925.00	$0.00	$934.25
0	SPECIAL	WIRE / MOUNT - CAB/FRONT ; HOPPER/REAR WITH GUARD	$1,370.00	$0.00	$1,383.70
0	SPECIAL	BEACONS CAB/FRONT ; HOPPER/REAR	$1,465.00	$0.00	$1,479.65
0	SPECIAL	STROBES CAB/FRONT ; HOPPER/REAR	$1,245.00	$0.00	$1,257.45
0	SPECIAL	LED STROBE CAB/FRONT ; HOPPER/REAR	$2,045.00	$0.00	$2,065.45
0	1111697	FRONT SPRAY BAR (**NOT COMPATIBLE WITH THE STANDARD WATER SYSTEM**)	$540.00	$0.00	$545.40
0	1111742	FRONT SPRAY BAR **(USE W/PM-10)** **(NOT COMPATIBLE WITH THE STANDARD WATER SYSTEM)**	$700.00	$0.00	$707.00
0	SPECIAL	BEACON CAB/FRONT ; (2) HOPPER/REAR BEACONS WITH LED ARROWSTICK **(USE W/ANDERING HOSE**)	$3,510.00	$0.00	$3,545.10
0	SPECIAL	BEACON CAB/FRONT ; (2) HOPPER/REAR BEACONS WITH LED ARROWSTICK **(USE W/O WANDERING HOSE)**	$3,510.00	$0.00	$3,545.10
0	SPECIAL	STROBE CAB/FRONT ; (2) HOPPER/REAR STROBES LED WITH ARROWSTICK **(USE W/WANDERING HOSE)**	$4,520.00	$0.00	$4,565.20
0	SPECIAL	STROBE CAB/FRONT ; (2) HOPPER/REAR STROBES WITH LED ARROWSTICK **(USE W/O WANDERING HOSE)**	$4,520.00	$0.00	$4,565.20
0	SPECIAL	AUTO LUBE TRUCK/SWEEPER	$7,055.00	$0.00	$7,125.55
0	1108945	AM/FM RADIO WITH CD	$890.00	$0.00	$898.90
0	SPECIAL	EXTRA KEY	$105.00	$0.00	$106.05
0	SPECIAL	2 1/2 LB. FIRE EXTINGUISHER	$205.00	$0.00	$207.05
0	SPECIAL	5 LB. FIRE EXTINGUUISHER	$235.00	$0.00	$237.35
0	SPECIAL	PAINT OUTSIDE CAB	$5,865.00	$0.00	$5,923.65
0	SPECIAL	PAINT WHEEL RIMS	$1,140.00	$0.00	$1,151.40
0	SPECIAL	RAIN CAP EXHAUST	$370.00	$0.00	$373.70
0	SPECIAL	SPARE TIRE/WHEEL	$1,285.00	$0.00	$1,297.85
0	1112945	MAGNET W/TOOL BOX	$9,410.00	$0.00	$9,504.10
0	1112946	MAGNET W/O TOOL BOX	$10,195.00	$0.00	$10,296.95
0	1107537	17" WORK PLATFORM **(NOT COMPATIABLE W/EXTRA WATER TANK)**	$3,215.00	$0.00	$3,247.15
0	SPECIAL	(1) EXTRA 140 GALLON WATER TANK (TOP FILL) **(NOT COMPATIABLE W/WORK PLATFORM)**	$6,265.00	$0.00	$6,327.65
0	SPECIAL	(1) EXTRA 140 GALLON WATER TANK (BOTTOM FILL) **(NOT COMPATIABLE W/WORK PLATFORM)**	$6,265.00	$0.00	$6,327.65
0	SPECIAL	(1) EXTRA 360 GALLON WATER TANK **(NOT COMPATIABLE W/WORK PLATFORM)**	$7,550.00	$0.00	$7,625.50
0	SPECIAL	2 YEAR WARRANTY - 100,000 Miles	$2,050.00	$0.00	$2,070.50
0	SPECIAL	3 YEAR WARRANTY - 100,000 Miles	$4,095.00	$0.00	$4,135.95
0	SPECIAL	4 YEAR WARRANTY - 100,000 Miles	$5,985.00	$0.00	$6,044.85
0	SPECIAL	5 YEAR WARRANTY - 100,000 Miles	$8,190.00	$0.00	$8,271.90
0	1121206	WIRE/MOUNT CAB & REAR	$945.00	$0.00	$954.45
0	1121207	WIRE/MOUNT CAB & REAR W/GUARD	$1,400.00	$0.00	$1,414.00
0	1121208	LED STROBE CAB & REAR	$2,300.00	$0.00	$2,323.00
0	1121210	WIRE/MOUNT CAB & REAR WITH LED ARROWBOARD	$3,400.00	$0.00	$3,434.00
0	1121211	LED STROBE CAB/REAR WITH ARROWBOARD	$3,565.00	$0.00	$3,600.65
0	SPECIAL	BEACON CAB & REAR WITH LED ARROWBOARD	$3,645.00	$0.00	$3,681.45
0	SPECIAL	STROBE CAB & REAR WITH LED ARROWBOARD	$3,990.00	$0.00	$4,029.90
0	SPECIAL	LED STROBE CAB/REAR WITH LED ARROWBOARD	$4,600.00	$0.00	$4,646.00

MODEL: CROSSWIND SHARED POWER TIER 4F

SUPERCEDES ALL PREVIOUS PRICE LISTS
PRICE LIST (U.S. DOLLARS)

QUANTITY	PART NUMBER	MODEL DESCRIPTION	2016 PRICE	2016 EXTENDED	2017 MIDeal PRICE
		----------WARRANTY--------			
0	EW- AIR-NA-2PL	CROSSWIND 2ND YEAR PARTS/LABOR	$2,500.00	$0.00	$ 2,630.00
0	EW- AIR-NA-3PL	CROSSWIND 3RD YEAR PARTS/LABOR	$3,800.00	$0.00	$ 4,000.00
0	EW- AIR-NA-4PL	CROSSWIND 4TH YEAR PARTS/LABOR	$5,800.00	$0.00	$ 6,105.00
0	EW- AIR-NA-5PL	CROSSWIND 5TH YEAR PARTS/LABOR	$7,900.00	$0.00	$ 8,315.00

FREIGHT RATES

0	FRT-124-001	SELF SHIPPING DOCK CHARGE	$595.00	$0.00
0	FRT-124-002	FREIGHT-IL,WI,IA,IN,MI,MN,KY	$1,310.00	$0.00
0	FRT-124-003	FREIGHT-TN,WV,PA,NY	$2,850.00	$0.00

0	FRT-124-004	FREIGHT-NH,VT,ME	$3,555.00	$0.00
0	FRT-124-005	FREIGHT-NEW YORK CITY	$4,110.00	$0.00
0	FRT-124-006	FREIGHT-ND,SD,NE,OK,KS,AR,AL,MO	$2,715.00	$0.00
0	FRT-124-007	FREIGHT-AZ,UT	$5,390.00	$0.00
0	FRT-124-008	FREIGHT-CA,NV,ID,OR,WA	$6,355.00	$0.00
0	FRT-124-009	FREIGHT-CHICAGO/MILWAUKEE	$900.00	$0.00
0	FRT-124-010	FREIGHT - FL,LA,TX,NM,CO,WY,MT	$4,145.00	$0.00
0	FRT-124-011	FREIGHT- OH,ST.LOUIS METRO	$1,530.00	$0.00
0	FRT-124-012	FREIGHT- MS,GA,SC,NC,VA,MD	$3,130.00	$0.00
0	FRT-124-013	FREIGHT - RI,DE,CT,NJ,MA	$2,740.00	$0.00
0	FRT-124-014	FREIGHT - LAREDO, TX	$6,700.00	$0.00
0	FRT-124-015	SPECIALIZED TRANSPORT EQUIPMENT	$1,030.00	$0.00

SUB TOTAL	**$2,630.00**

-----DISCOUNTS-----

0	DISC-124-ADDL	DISCOUNT	$78.90	-$78.90

SPECIAL RFQ OPTIONS / OTHER DESCRIPTIONS

GRAND TOTAL	**$2,551.10**

This is Bell Equipment's 9/15/16 price list for the MIDeal quote

MODEL: 4M EAGLE
EFFECTIVE DATE:10/03/2016
SUPERCEDES ALL PREVIOUS PRICE LISTS
PRICE LIST (U.S. DOLLARS)

Purchase Order #	
Order Date:	
Delivery Date Requirment If Any:	

Ship To Address:
State Penalty Clause If Applicable:

QUANTITY	PART NUMBER	MODEL DESCRIPTION	2016 PRICE	2016 EXTENDED	2017 MIDeal PRICE
0	1117695	**4M EAGLE - DUAL (M2)** Hydraulically driven left and right side brooms and variable height, right side dumping, 4.5 cu. yd. hopper, sweeper is powder coated from powder coatings chart 2003/N with powder coated gray undercarriage and includes the standard features listed below.	$165,625	$0.00	$167,281.25
0	1121718	**4M EAGLE - DUAL (PETERBILT)** Hydraulically driven left and right side brooms and variable height, right side dumping, 4.5 cu. yd. hopper, sweeper is powder coated from powder coatings chart 2003/N with powder coated gray undercarriage and includes the standard features listed below.	$165,625	$0.00	$167,281.25
0	SPECIAL	**4M EAGLE - DUAL (AUTOCAR)** Hydraulically driven left and right side brooms and variable height, right side dumping, 4.5 cu. yd. hopper, sweeper is powder coated from powder coatings chart 2003/N with powder coated gray undercarriage and includes the standard features listed below.	$165,625	$0.00	$167,281.25
		CHASSIS			
0	1119519	2016 AUTOCAR XPERT DUAL STEER (LIMITED)	CONTACT FACTORY	$0.00	
0	1107354	CANADIAN COMPLIANCE AND DAYTIME RUNNING LIGHTS FOR AUTOCAR CHASSIS	$725	$0.00	
0	1119120	2016 M2 DUAL STEER (2013 EMISSIONS) (LIMITED)	CONTACT FACTORY	$0.00	
0	1120245	2016 PETERBILT RIGHT HAND STEER (NON STOCKED CHASSIS) SINGLE SPEED REAR AXLE	CONTACT FACTORY	$0.00	
0	1119177	2016 PETERBILT DUAL STEER (NON STOCKED CHASSIS) SINGLE SPEED REAR AXLE	CONTACT FACTORY	$0.00	
		CHASSIS MOUNTING CHARGE			
0	1116594	M2 - CHASSIS ALTERATIONS	$2,135	$0.00	$2,135.00
0	1118602	AUTOCAR - CHASSIS ALTERATIONS	$2,135	$0.00	$2,135.00
0	SPECIAL	IH - CHASSIS ALTERATIONS	$2,135	$0.00	$2,135.00
0	SPECIAL	PETERBILT - CHASSIS ALTERATIONS	$2,135	$0.00	$2,135.00
0	SPECIAL	CUSTOMER SUPPLIED CHASSIS ALTERATIONS	CONTACT INSIDE SALES	$0.00	CONTACT INSIDE S/
0	CSC-HANDLING	CUSTOMER SUPPLIED HANDLING CHARGE	$2,815	$0.00	$2,815.00

NOTE: Customer Supplied Cassis Requires Both The Chassis Alterations and the Handling Charge

1	4820001	PAINT CAB STANDARD WHITE	N/C	$0.00	
1	4810001	PAINT SWEEPER STANDARD WHITE	N/C	$0.00	

NOTE: A BODY includes the cost of Elgin standard white finish paint. It does not however, include the price of the chassis.
NOTE: The chassis being supplied by a customer or dealer **must** comply completely with all Elgin requirements or the chassis will be modified at dealer's expense
NOTE: For cost of sweeper mounted on any other chassis, consult factory.
NOTE: One year warranty on all Elgin supplied parts and labor. Consult your Elgin dealer for full warranty details.

STANDARD FEATURES

Aux-engine;
Two-stage dry type with restriction indicator (at engine) and precleaner
Broom side, in-cab reversable, 46 "steel vertical digger 5 segment
Broom side, pneumatic floating suspension, pneumatic deploy
Broom, main, 34" diameter, 60" wide prefab disposable
Camera, Rear with in-cab monitor
Conveyor, cleated belt, adjustable height
Conveyor flush out system
Conveyor raise in reverse
Conveyor stall alarm
Dirt shoes, rubber
Electric backup alarm
Engine, sweeper, diesel, tier 4 FINAL, 74 HP
Hopper inspection door
Hopper,4.5 cu yd with window and skylight
Hopper up visual/audible indicator
Hopper, variable high dump, 38" -10'
Hopper lift, dual scissors, 10,000 lbs
Hose, hydrant fill, 16'8" (5080 mm) with strainer and coupling
Hydraulic oil level gauge
and in-cab level light
Lights, automatic backup
Lights, combination tail/stop, separate amber signal
Lights, flood light, one per broom left,right,and main broom (3)
Manuals, operator and parts
Rear broom cover and anti-carryover wrap
Rear broom spray bar
Reflectors, set of 2
Sweep resume / raise in reverse
Tactile controls for all sweep functions
Tool storage
Water fill, anti-siphon
Water level indicator in-cab
Water Pump, electric diaphragm
Water tank, molded polyethylene, 360 gallon total
nominal capacity

MODEL: 4M EAGLE

SUPERCEDES ALL PREVIOUS PRICE LISTS
PRICE LIST (U.S. DOLLARS)

QUANTITY	PART NUMBER	MODEL DESCRIPTION	2016 PRICE	2016 EXTENDED	2017 MIDeal PRICE
		--------ALARMS----------			
0	1104970	HOPPER UP CONSTANT ALARM	$355.00	$0.00	$358.55
0	1101528	LATCHING ELEVATOR REVERSE AND ALARM	$385.00	$0.00	$388.85
0	1117644	ECCO SA940 SMART ALARM (ILO of STD)	$270.00	$0.00	$272.70
0	1104705	HOPPER FULL INDICATOR	$770.00	$0.00	$777.70
		-------AUTO LUBE----------			
0	1101559	AUTO LUBE-SWEEPER (DUAL)	$4,835.00	$0.00	$4,883.35
0	1101560	AUTOLUBE - SWEEPER & TRUCK	$7,040.00	$0.00	$7,110.40
		-------AUTO SHUTDOWN------			
0	1101380	HIGH TEMPERTURE HYDRAULIC OIL - SHUTDOWN	335.00	$0.00	$338.35

0	1102798	HYDRAULIC LEVEL SHUTDOWN	345.00	$0.00	$348.45
		----------BROOMS---------			
0	1058158	STRIP MAINBROOM (URB)	$250.00	$0.00	$252.50
0	1077151	URB STRIP MAINBROOM W/CENTER SWEEP MANDREL	$250.00	$0.00	$252.50
0	1116786	VARIABLE SPEED	$2,240.00	$0.00	$2,262.40
0	1096691	DEDUCT MAINBROOM & CORE	-$435.00	$0.00	-$435.00
0	1118838	MAINBROOM SPRING SUSPENSION **(NOT COMPATIBLE WITH HYDRAULIC CONTROL SIDEBROOMS)**	N/C	$0.00	
0	1118869	HYDRAULIC CONTROL SIDEBROOMS **(COMPATIABLE WITH CONVENTIONAL CHASSIS ONLY)**	N/C	$0.00	
0	1109605	EXTENDED REACH RIGHT HAND SIDEBROOM **(AUTOCAR & PETERBILT CHASSIS)**	$1,345.00	$0.00	$1,358.45
0	1105519	EXTENDED REACH RIGHT AND LEFT HAND SIDEBROOMS **(AUTOCAR & PETERBILT CHASSIS)**	$1,890.00	$0.00	$1,908.90
0	1120361	EXTENDED REACH RIGHT HAND SIDEBROOM **(M2 & IH CHASSIS)**	$1,345.00	$0.00	$1,358.45
0	1120782	EXTENDED REACH RIGHT AND LEFT HAND SIDEBROOMS **(M2 & IH CHASSIS)**	$1,890.00	$0.00	$1,908.90
		-----CONVEYOR/ELEVATOR----			
0	1106049	HEAVY DUTY LOWER ROLLER	$1,000.00	$0.00	$1,010.00
0	1118107	HIGH SPEED CONVEYOR MOTOR	$455.00	$0.00	$459.55
0	1120662	SQUEEGEE CONVEYOR (ILO STANDARD RUBBER BELT)	N/C	$0.00	
		--------DECALS----------			
0	1102783	RED LOGO/SWOOSH-EAGLE	N/C	$0.00	
0	1102784	WHITE LOGO/SWOOSH - EAGLE	N/C	$0.00	
		----------GAUGES----------			
0	1101379	BROOM HOUR METERS	$370.00	$0.00	$373.70
0	1111656	HYDRAULIC OIL TEMPERTURE DISPLAY (IN CAB)	$345.00	$0.00	$348.45
0	1119940	IN-CAB AUXILIARY ENGINE AIR RESTRICTION GAUGE	$755.00	$0.00	$762.55
		----------HOPPER----------			
0	1120240	HOPPER INTERIOR LED LIGHT	$800.00	$0.00	$808.00
0	1101951	STAINLESS STEEL HOPPER	$9,005.00	$0.00	$9,095.05
		-----EXTRA MANUALS----			
0	0701682	EAGLE OPERATORS MANUAL	$50.00	$0.00	$50.50
0	0702462	EAGLE SERVICE MANUAL	$95.00	$0.00	$95.95
0	0702242	EAGLE PARTS BOOK	$125.00	$0.00	$126.25
0	0704072	CUMMINS OPERATORS & MAINTENANCE MANUAL	$130.00	$0.00	$131.30
0	0704073	CUMMINS TROUBLESHOOTING MANUAL	$175.00	$0.00	$176.75
		----LIFE LINER SYSTEM----			
0	1104503	LIFELINER HOPPER SYSTEM W/WARRANTY	$4,505.00	$0.00	$4,550.05

MODEL: 4M EAGLE

SUPERCEDES ALL PREVIOUS PRICE LISTS
PRICE LIST (U.S. DOLLARS)

QUANTITY	PART NUMBER	MODEL DESCRIPTION	2016 PRICE	2016 EXTENDED	2017 MIDeal PRICE
		---------LIGHTS----------			
0	1103553	PACKAGE 1 : SINGLE REAR/SINGLE HOPPER BEACON; LED WITH GUARD	$1,930.00	$0.00	$1,949.30
0	1103533	PACKAGE 2 : DUAL REAR/SINGLE HOPPER BEACON; LED WITH GUARD	$2,635.00	$0.00	$2,661.35
0	1103536	PACKAGE 3 : DUAL REAR/SINGLE HOPPER BEACON; LED WITH GUARD & LED ARROWSTICK	$4,060.00	$0.00	$4,100.60
0	1104618	PACKAGE 4 : SINGLE REAR/SINGLE HOPPER MOUNT AND GUARD W/O BEACONS	$1,570.00	$0.00	$1,585.70
0	1104619	PACKAGE 5 : DUAL REAR/SINGLE HOPPER MOUNT AND GUARD W/O BEACONS	$1,955.00	$0.00	$1,974.55
0	1102735	LED STOP/TAIL/TURN/REAR ID/CLEARANCE LIGHTS	$340.00	$0.00	$343.40
0	1102759	REAR MOUNTED LED ARROWSTICK	$1,700.00	$0.00	$1,717.00
0	1102736	(2) REAR LOW MOUNTED OVAL AMBER LED FLASHERS	$455.00	$0.00	$459.55
0	1103898	(2) REAR HIGH MOUNTED OVAL AMBER LED FLASHERS	$560.00	$0.00	$565.60
0	1104481	ARROWBOARD - REAR	$2,020.00	$0.00	$2,040.20
0	1114836	(3) LED WORK LIGHTS (1 EACH SIDE BROOM, 1 ON MAINBROOM)	$495.00	$0.00	$499.95
0	1114837	(4) LED WORK LIGHTS (1 EACH SIDE BROOM, 2 ON MAINBROOM)	$795.00	$0.00	$802.95
		----------PM10----------			
0	1116589	PM10 COMPLIANT (RULE 1186)	$3,060.00	$0.00	$3,090.60
		----------SAFETY----------			
0	1101037	SLOW MOVING VEHICLE SIGN	$150.00	$0.00	$151.50
0	1104991	REMOVE REAR CAMERA	N/C	$0.00	
0	SPECIAL	LEFT HAND SIDE CAMERA IN ADDITION TO STD REAR	$575.00	$0.00	$580.75
0	9306848	TRIANGLE REFLECTIVE FLARES (3)	$75.00	$0.00	$75.75
		-------SWEEP COMPONTENTS--			
0	1116574	CARBIDE DIRT SHOES (ILO RUBBER)	$820.00	$0.00	$828.20

0	1116575	RUBBER MOUNTED CARBIDE DRAG SHOES TWO-ROW (ILO RUBBER)	$765.00	$0.00	$772.65
0	1100656	SIDEBROOM TILT - RIGHT	$1,200.00	$0.00	$1,212.00
0	1100660	SIDEBROOM TILT - LEFT	$1,200.00	$0.00	$1,212.00
0	1117070	SIDEBROOM TILT - RIGHT W/INDICATOR	$1,200.00	$0.00	$1,212.00
0	1117071	SIDEBROOM TILT - LEFT W/INDICATOR	$1,200.00	$0.00	$1,212.00
0	SPECIAL	SQUEEGEE CONVEYER (ILO CLEATED BELT)	N/C	$0.00	
		-------SWEEPER ENGINE-----			
0	1120322	AUXILIARY ENGINE BATTERY DISCONNECT SWITCH	$505.00	$0.00	$510.05
0	6063004	EXTRA KEY	$45.00	$0.00	$45.45
0	1102752	SY-KLONE AUX ENGINE PRECLEANER	$635.00	$0.00	$641.35
0	1119563	BLOCK HEATER	$440.00	$0.00	$444.40
		-----TOOLS/TOOLBOXES-------			
0	1036150	HYDRANT WRENCH	$85.00	$0.00	$85.85
		----------WATER---------			
0	1032484	25' WATER FILL HOSE (ILO 16' 8")	$190.00	$0.00	$191.90
0	1108830	AIR PURGE FOR WATER SYSTEM	$375.00	$0.00	$378.75
		----------PAINT----------			
0	SPECIAL	SWEEPER PAINTED RAL 1023, 1037, 3020, 1018	$510.00	$0.00	$515.10
0	SPECIAL	SWEEPER PAINTED ANY OTHER RAL COLOR	$1,250.00	$0.00	$1,262.50
0	SPECIAL	SWEEPER PAINTED NON RAL	$3,790.00	$0.00	$3,827.90

MODEL: 4M EAGLE

SUPERCEDES ALL PREVIOUS PRICE LISTS
PRICE LIST (U.S. DOLLARS)

QUANTITY	PART NUMBER	MODEL DESCRIPTION	2016 PRICE	2016 EXTENDED	2017 MIDeal PRICE
		----- M2 CHASSIS OPTIONS -----			
0	0704005	M2 PARTS BOOK	$395.00	$0.00	$398.95
0	0704006	M2 OPERATOR BOOK	$45.00	$0.00	$45.45
0	0704007	M2 SERVICE MANUAL	$320.00	$0.00	$323.20
0	1071235	FUEL CAP SAFETY LOCK	$215.00	$0.00	$217.15
0	1075400	AM/FM/CD RADIO	$890.00	$0.00	$898.90
0	1080756	LEFT HAND FENDER MOUNTED MIRROR	$505.00	$0.00	$510.05
0	1081188	EXTRA KEY	$45.00	$0.00	$45.45
0	1081365	IN CAB AIR FILTER RESTRICTION INDICATOR	$830.00	$0.00	$838.30
0	1081747	(2) BOSTROM AIR 905 CLOTH HI-BACK	$2,010.00	$0.00	$2,030.10
0	1081748	(1) AIR CLOTH HI-BACK SEAT	$1,035.00	$0.00	$1,045.35
0	1103082	(2) AIR SEATS WITH CORDURA CLOTH	$3,915.00	$0.00	$3,954.15
0	1081909	SINGLE ARM REST - VINYL **(ONLY W/AIR RIDE SEATS)**	$360.00	$0.00	$363.60
0	1081910	DUAL ARM REST - VINYL **(ONLY W/AIR RIDE SEATS)**	$680.00	$0.00	$686.80
0	1081911	SINGLE ARM REST - CLOTH **(ONLY W/AIR RIDE SEATS)**	$360.00	$0.00	$363.60
0	1081912	DUAL ARM REST - CLOTH **(ONLY W/AIR RIDE SEATS)**	$680.00	$0.00	$686.80
0	1081956	DAYTIME RUNNING LIGHTS	$1,050.00	$0.00	$1,060.50
0	1090653	DUAL AIR HORN	$1,530.00	$0.00	$1,545.30
0	1101567	2 1/2 LB. FIRE EXTINGUISHER	$210.00	$0.00	$212.10
0	1101568	5 LB. FIRE EXTINGUISHER	$240.00	$0.00	$242.40
0	1109607	12" CONVEX MIRRORS (IL0 STD 8")	$315.00	$0.00	$318.15
0	1103751	SINGLE CAB MOUNTED BEACON; LED WITH GUARD	$1,700.00	$0.00	$1,717.00
0	1117611	FULL WIDTH FRONT SPRAY BAR	$1,200.00	$0.00	$1,212.00
0	1120505	SPARE TIRE / WHEEL	$1,315.00	$0.00	$1,328.15
0	1072443	BATTERY DISCONNECT	$505.00	$0.00	$510.05
		-----NAVISTAR CHASSIS OPTIONS-----			
0	4820001	CAB STANDARD WHITE	N/C	$0.00	
0	1063731	NAV CAB PAINTED SPECIAL COLOR	$3,635.00	$0.00	$3,671.35
0	1086733	LEFT HAND FENDER MOUNTED MIRROR	$505.00	$0.00	$510.05
0	1091761	EXTRA KEY	$55.00	$0.00	$55.55
0	1091770	(2) ELECTRIC & (1) AIR HORN	$1,840.00	$0.00	$1,858.40
0	1097641	NATIONAL AIR RIDE SEAT - PASSENGER SIDE - VINYL	$2,060.00	$0.00	$2,080.60
0	1097642	NATIONAL AIR RIDE SEAT-PASSENGER SIDE-VINYL W/ARM REST	$2,200.00	$0.00	$2,222.00
0	1097643	NATIONAL AIR RIDE SEAT-PASSENGER SIDE - CLOTH	$2,200.00	$0.00	$2,222.00
0	1097644	NATIONAL AIR RIDE SEAT-PASSENGER SIDE-CLOTH W/ARM REST	$2,330.00	$0.00	$2,353.30
0	1097645	NATIONAL AIR RIDE SEAT - DRIVER SIDE - VINYL	$2,060.00	$0.00	$2,080.60
0	1097646	NATIONAL AIR RIDE SEAT-DRIVERS SIDE-VINYL W/ARM REST	$2,200.00	$0.00	$2,222.00
0	1097647	NATIONAL AIR RIDE SEAT - DRIVER SIDE - CLOTH	$2,200.00	$0.00	$2,222.00
0	1097648	NATIONAL AIR RIDE SEAT - DRIVER SIDE - CLOTH W/ARM REST	$2,525.00	$0.00	$2,550.25
0	1099317	(1) ELECTRIC HORN	$285.00	$0.00	$287.85
0	1091822	AM/FM/CD RADIO	$890.00	$0.00	$898.90
0	1101567	2 1/2 LB. FIRE EXTINGUISHER	$210.00	$0.00	$212.10
0	1101568	5 LB. FIRE EXTINGUISHER	$240.00	$0.00	$242.40
0	1117611	FULL WIDTH FRONT SPRAY BAR	$1,200.00	$0.00	$1,212.00

MODEL: 4M EAGLE

SUPERCEDES ALL PREVIOUS PRICE LISTS
PRICE LIST (U.S. DOLLARS)

QUANTITY	PART NUMBER	MODEL DESCRIPTION	2016 PRICE	2016 EXTENDED	2017 MIDeal PRICE
		----AUTOCAR XPERT CHASSIS OPTIONS----			
0	1107216	RAIN FLAPPER EXHAUST	$380.00	$0.00	$383.80
0	1107220	2 BATTERIES, 31 ECL, 12V, 1900CCA	$640.00	$0.00	$646.40
0	1107230	AUTO AIR DRAIN VALVE	$840.00	$0.00	$848.40
0	1107232	BATTERY DISCONNECT	$1,330.00	$0.00	$1,343.30
0	1107236	DUAL UNDERCAB AIR HORN	$1,325.00	$0.00	$1,338.25
0	1107238	ISRI HT914 HIGH BACK, AIR RIDE, RH	$2,075.00	$0.00	$2,095.75
0	1107239	ISRI HT914 HIGH BACK, AIR RIDE, LH	$2,075.00	$0.00	$2,095.75
0	1107243	IN CAB AIR RESTRICTOR	$540.00	$0.00	$545.40
0	1107244	DAYTIME RUNNING LIGHTS FOR US ONLY	$525.00	$0.00	$530.25
0	1107245	PAINT OUTSIDE CAB	$5,985.00	$0.00	$6,044.85
0	1107247	PAINT WHEEL RIMS	$1,165.00	$0.00	$1,176.65
0	1107252	5 YEAR - ALLISON TRANSMISSION	$710.00	$0.00	$717.10
0	1108945	AM/FM RADIO WITH CD	$890.00	$0.00	$898.90
0	1109228	2 YEAR WARRANTY - 100,000 Miles	$2,095.00	$0.00	$2,115.95
0	1109229	3 YEAR WARRANTY - 100,000 Miles	$4,180.00	$0.00	$4,221.80
0	1109230	4 YEAR WARRANTY - 100,000 Miles	$5,985.00	$0.00	$6,044.85
0	1108459	5 YEAR WARRANTY - 100,000 Miles	$8,355.00	$0.00	$8,438.55
0	1109244	EXTRA KEY	$110.00	$0.00	$111.10
0	SPECIAL	SPARE TIRE / WHEEL	$1,315.00	$0.00	$1,328.15
0	SPECIAL	VANDALL PROTECTION PACKAGE	$210.00	$0.00	$212.10
0	1120374	2 1/2 LB. FIRE EXTINGUISHER	$205.00	$0.00	$207.05
0	1120375	5 LB. FIRE EXTINGUISHER	$240.00	$0.00	$242.40
0	1116212	2014 AUTOCAR SERVICE MANUAL 2010 EMISSIONS- CD	$655.00	$0.00	$661.55
		---------WARRANTY---------			
0	EW-ME-NA-2PL	EAGLE 2ND YEAR PARTS/LABOR	$2,650.00	$0.00	$2,705.00
0	EW-ME-NA-3PL	EAGLE 3RD YEAR PARTS/LABOR	$4,995.00	$0.00	$5,100.00
0	EW-ME-NA-4PL	EAGLE 4TH YEAR PARTS/LABOR	$7,105.00	$0.00	$7,250.00
0	EW-ME-NA-5PL	EAGLE 5TH YEAR PARTS/LABOR	$9,100.00	$0.00	$9,290.00
		------FREIGHT RATES------			
0	FRT-111-001	SELF SHIPPING DOCK CHARGE	$595.00	$0.00	
0	FRT-111-002	FREIGHT-IL,WI,IA,IN,MI,MN,KY	$1,310.00	$0.00	
0	FRT-111-003	FREIGHT-TN,WV,PA,NY	$2,850.00	$0.00	
0	FRT-111-004	FREIGHT-NH,VT,ME	$3,555.00	$0.00	
0	FRT-111-005	FREIGHT-NEW YORK CITY	$4,110.00	$0.00	
0	FRT-111-006	FREIGHT-ND,SD,NE,OK,KS,AR,AL,MO	$2,715.00	$0.00	
0	FRT-111-007	FREIGHT-AZ,UT	$5,390.00	$0.00	
0	FRT-111-008	FREIGHT-CA,NV,ID,OR,WA	$6,355.00	$0.00	
0	FRT-111-009	FREIGHT- CHICAGO/MILWAUKEE	$900.00	$0.00	
0	FRT-111-010	FREIGHT-FL,LA,TX,NM,CO,WY,MT	$4,145.00	$0.00	
0	FRT-111-011	FREIGHT-OH,ST.LOUIS METRO	$1,530.00	$0.00	
0	FRT-111-012	FREIGHT,MS,GA,SC,NC,VA,MD	$3,130.00	$0.00	
0	FRT-111-013	FREIGHT - RI,DE,CT,NJ,MA	$2,740.00	$0.00	
0	FRT-111-014	FREIGHT - LAREDO, TX	$6,700.00	$0.00	
0	FRT-111-015	SPECIALIZED TRANSPORT EQUIPMENT	$1,030.00	$0.00	
			SUB TOTAL	**$0.00**	**SUB TOTAL**
		-----DISCOUNTS-----			
0	DISC-111-ADDL	DISCOUNT	$0.00	$0.00	#REF!
		SPECIAL RFQ OPTIONS / OTHER DESCRIPTIONS			
			GRAND TOTAL	**$0.00**	**GRAND TOTAL**

MODEL: ECOINFUSED PELICAN NP 55KW
EFFECTIVE DATE: 10/03/2016
SUPERCEDES ALL PREVIOUS PRICE LISTS
DEALER PRICE LIST (U.S. DOLLARS)

Purchase Order #	**Ship To Address:**
Order Date:	
Delivery Date Requirment If Any:	**State Penalty Clause If Applicable:**

QUANTITY	PART NUMBER	MODEL DESCRIPTION	2017 LIST PRICE	2017 EXTENDED
0	1120933	**PELICAN P SINGLE, TIER 4F, 55KW, USA AND CANADA** Single steer & gutter broom, right side hydraulically driven, Tier 4F JD 4045TF low emission diesel engine, hydrostatic drive and steering, chassis and wheels powder coated standard white and including the standard features below.	$183,000	$0.00
0	1120847	**PELICAN P DUAL, TIER 4F, 55KW, USA AND CANADA** Dual steer & gutter brooms, hydraulically driven, Tier 4F JD 4045TF low emission diesel engine, hydrostatic drive and steering, chassis and wheels powder coated standard white and including the standard features below.	$193,500	$0.00

NOTE: One year warranty on all Elgin supplied parts and labor. Consult your Elgin dealer for full warranty details.

STANDARD FEATURES

1	0701443	PELICAN P OPERATORS MANUAL	STANDARD	$0.00
1	0702261	PELICAN P PARTS BOOK	STANDARD	$0.00
1	0704046	JOHN DEERE OPERATORS MANUAL	STANDARD	$0.00
1	0704047	JOHN DEERE PARTS BOOK	STANDARD	$0.00
1	0730166	BROOM MEASUREMENT RULER	STANDARD	$0.00
1	0701708	MACHINE DELIVERY PACKET	STANDARD	$0.00
1	0702020	ELGIN SAFETY MANUAL	STANDARD	$0.00

Air cleaner, two-stage, dry type with restriction indicator
Air conditioner
Alternator, 120 amp
Anti siphon water fill
Automatic engine shutdown (oil pressure/engine temperature)
Automatic pickup in reverse
B20 biodiesel compatible
Back up alarm, electric
Battery, maintenance free
Brakes, power
Broom, main, hydraulically suspended
Broom, main, in cab pressure control
Broom, main, prefab, disposable
Broom, side broom, hydraulically suspended
Broom, side broom, in cab pressure control
Bumper pads, front jack
Coolant recovery system
Doors, see through glass, prop-able
Electronic Throttle
Engine, hour meter
Gauges & Warning lights:
  engine oil temperature
  engine oil pressure
  fuel level
  speedometer & odometer w/trip set
Fenders, over front wheels
Flushing system for hopper/conveyor
Fuel tank, 35 gallons
Fuel Water separator with indicator light
Heater, pressurizer with filtered air, defroster
Hose, hydrant fill, 16' 8" with coupling
Light, spotlight, adjustable, one per side broom
Lights, 2 combination, tail/stop lights
Lights, headlights, multiple beam
Lights, low water light
Low Hydraulic Warning
Main broom controls in cab
Manuals, operator and parts
Mirror, inside rear view
Mirrors, outside, front mounted 6" fish eyes
Mirrors, outside, front post mounted, west coast type, one each
Parking brake with interlock
Rear Camera & in cab monitor
Return to sweep feature
Seat Belts (both sides for dual)
Seats, extra wide cordura suspension seats with arm rests
Signals, self-canceling directional with hazard switch
Sprung guide wheel, heavy duty
Steering wheel, tilt and telescoping
Sun visors
Tachometer, diesel engine
Tires, tubeless radials
Tow loops, four
Water tank, fill gauge
Water tank, molded polyethylene: 220 gallon total nominal capa
Wheels, dual guide
Wheels painted grey
Window, opening front opera
Windshield washer
Windshield wipers with intermittent setting
Windshield, tinted

QUANTITY	PART NUMBER	MODEL DESCRIPTION	2017 LIST PRICE	2017 EXTENDED
		-----ADDITIONAL MANUALS----		
0	701443	PELICAN OPERATORS MANUAL	$55.00	$0.00
0	702261	PELICAN PARTS BOOK	$100.00	$0.00
0	702453	PELICAN SERVICE	$95.00	$0.00
0	704046	JOHN DEERE OPERATORS MANUAL	$55.00	$0.00
0	704047	JOHN DEERE PARTS BOOK	$100.00	$0.00
0	704048	JOHN DEERE SERVICE	$190.00	$0.00
		----------ALARMS----------		
0	1089339	SMART BACK UP ALARM	$275.00	$0.00
0	1089728	GROTE LOUD MOUTH BACKUP ALARM	$275.00	$0.00
		------AUTOLUBE----------		
0	1087667	MIDWEST AUTOLUBE - SINGLE	$5,500.00	$0.00
0	1087668	MIDWEST AUTOLUBE - DUAL	$6,180.00	$0.00
0	1089040	VOGEL AUTOLUBE - SINGLE	$6,935.00	$0.00
0	1089041	VOGEL AUTOLUBE - DUAL	$7,370.00	$0.00
0	1107312	VOGEL AUTOLUBE - DUAL (USE W/GREASABLE DIRT SHOES)	$9,090.00	$0.00
0	1103124	MIDWEST AUTOLUBE - DUAL (USE W/GREASABLE DIRT SHOES)	$7,110.00	$0.00
0	1108963	MIDWEST AUTOLUBE - SINGLE (USE W/GREASABLE DIRT SHOES)	$6,485.00	$0.00
		------AUTO SHUTDOWN-------		
0	1087563	HYDRAULIC LEVEL SHUTDOWN	$175.00	$0.00
0	1089429	HYDRAULIC LEVEL & TEMPERATURE SHUTDOWN	$350.00	$0.00
0	1120654	HYDRAULIC TEMPERATURE SHUTDOWN	$175.00	$0.00
		---------BROOMS----------		
0	1015558	EXTRA SET SIDE BROOM SEGMENT, FILLED	$245.00	$0.00
0	1053847	POLY/POLY SIDE BROOM SET (PER SIDE)	$70.00	$0.00
0	1087976	STRIP BROOM 66" URB	$885.00	$0.00
0	1088008	MAIN BROOM CORE ONLY	-$160.00	$0.00
0	1088491	TUFF STRIP BROOM (ILO STD)	$895.00	$0.00
0	1088800	50/50 POLY/WIRE MAINBROOM	$885.00	$0.00
0	1089518	DEDUCT MAIN BROOM & CORE	-$465.00	$0.00
0	1091361	URB STRIP BROOM - CENTER SWEEP	$885.00	$0.00
0	1094877	ALUMINUM SIDE BROOM SEGMENT PER SIDE	$635.00	$0.00
0	1094878	POLY/POLY SIDE BROOM SET	$125.00	$0.00
0	1095342	DEDUCT SIDE BROOM SEGMENT (PER SIDE)	-$190.00	$0.00
0	1118360	DOUBLE WRAP MAIN BROOM (ILO STD)	$1,005.00	$0.00
		----CONVEYOR/ELEVATOR-----		
0	1087545	CONVEYOR STALL ALARM	$705.00	$0.00
0	1087575	LOWER ROLLER DEFLECTOR	$490.00	$0.00
0	1120820	CONVEYOR CLEANOUT	$495.00	$0.00
		----------GAUGES----------		
0	1087539	MAINBROOM ODOMETER/HOUR METER	$375.00	$0.00
0	1088858	LOOSE CHARGE PRESSURE GAUGE	$300.00	$0.00
0	1120827	IN CAB AIR RESTRICTION GAUGE	$365.00	$0.00
		-----LIFELINER SYSTEM / EPOXY COATING-----		
1	1092236	LIFELINER HOPPER SYSTEM W/WARRANTY	$3,930.00	$3,930.00

QUANTITY PART NUMBER MODEL DESCRIPTION 2017 LIST PRICE 2017 EXTENDED

		---------LIGHTS----------		
0	1087873	LED CLEARANCE LIGHTS	$260.00	$0.00
0	1120770	LED ALTERNATING & FLASHING LIGHTS IN BATTERY COVER	$1,145.00	$0.00
0	1120744	(2) LED REAR FLOODS & BACKUP LIGHTS	$765.00	$0.00
0	1120840	LED RIGHT HAND SEAL BEAM WORK LIGHT	$295.00	$0.00
0	1120841	LED RIGHT HAND & LEFT HAND SEAL BEAM WORK LIGHTS	$585.00	$0.00
0	1101214	(2) CAB FORWARD FACING FLOOD LIGHTS WITH LIGHT BAR	$420.00	$0.00
0	1101215	(2) CAB FORWARD FACING FLOOD LIGHTS WITHOUT LIGHT BAR	$700.00	$0.00
0	1114404	(2) CAB FORWARD FACING LED FLOOD LIGHTS WITH LIGHT BAR	$1,085.00	$0.00
0	1114405	(2) CAB FORWARD FACING LED FLOOD LIGHTS WITHOUT LIGHT BAR	$1,400.00	$0.00
0	1101273	LED STOP/TAIL/TURN **NOT COMPATIABLE WITH LIGHT PACKAGES 3 & 4**	$345.00	$0.00
0	1101314	PACKAGE 1: ONE BEACON W/ GUARD	$790.00	$0.00
0	1101315	PACKAGE 2: TWO BEACONS W/ GUARDS	$1,320.00	$0.00
0	1101316	PACKAGE 3: PACKAGE 2 + FOUR ROOF MOUNTED SWEEP FLASHERS	$1,865.00	$0.00
0	1101317	PACKAGE 4: PACKAGE 3 + FRONT ID LIGHTS AND ARROWSTICK	$2,945.00	$0.00
0	1101318	PACKAGE 5: ONE LED STROBE W/ GUARD	$945.00	$0.00
0	1101319	PACKAGE 6: TWO LED STROBES W/ GUARD	$1,655.00	$0.00
0	1101320	PACKAGE 7: PACKAGE 6 + FOUR ROOF MOUNTED SWEEP FLASHERS **LED STOP/TAIL/TURN MUST BE ORDERED WITH THIS PACKAGE**	$2,215.00	$0.00
0	1101321	PACKAGE 8: PACKAGE 7 + LED FRONT ID LIGHTS AND REAR LED ARROWSTICK **LED STOP/TAIL/TURN MUST BE ORDERED WITH THIS PACKAGE**	$3,675.00	$0.00
0	1101322	PACKAGE 9: REAR LIGHT MOUNTING RAIL ONLY	$655.00	$0.00
0	1101323	PACKAGE 10: FRONT LIGHT MOUNTING RAIL ONLY	$655.00	$0.00
0	1101324	PACKAGE 11: REAR LIGHT MOUNTING RAIL AND WIRE/MOUNT/GUARD FOR 1 LIGHT	$720.00	$0.00
0	1101325	PACKAGE 12: REAR LIGHT MOUNTING RAIL AND WIRE/MOUNT/GUARD FOR 2 LIGHTS	$1,205.00	$0.00
0	1101326	PACKAGE 13: LED ARROWSTICK (ONLY)	$1,610.00	$0.00
0	1105084	PACKAGE 14: LED ARROWSTICK (USE WITH PACKAGE'S 1, 2, 3, 5, 6, 7)	$1,610.00	$0.00

MODEL: ECOINFUSED PELICAN NP 55KW
EFFECTIVE DATE: 10/03/2016
SUPERCEDES ALL PREVIOUS PRICE LISTS
DEALER PRICE LIST (U.S. DOLLARS)

QUANTITY	PART NUMBER	MODEL DESCRIPTION	2017 LIST PRICE	2017 EXTENDED
		------PELICAN OPTIONS-----		
0	1042010	WATER FILL HOSE QUICK DISCONNECT	$510.00	$0.00

0	1087540	LICENSE PLATE HOLDER - FRONT & REAR	$205.00	$0.00
0	1087541	LOCKING ENGINE COMPARTMENT	$220.00	$0.00
0	1087605	CARBIDE DIRT SHOES	$1,075.00	$0.00
1	1087981	RED LOGO/SWOOSH	$0.00	$0.00
0	1087982	WHITE LOGO/SWOOSH	$0.00	$0.00
0	1122929	SHIP DECALS AND SWOOSH LOOSE IN HOPPER	$0.00	$0.00
0	1087995	25' WATER FILL HOSE (ILO 16' 8")	$195.00	$0.00
0	1097387	GREASABLE DIRT SHOES	$90.00	$0.00
0	1121071	SLIDING REAR WINDOW	$880.00	$0.00
0	1099915	STEEL RIGHT HAND DOOR W/ SLIDING WINDOW	$1,805.00	$0.00
0	1100256	RADIO INSTALL PACKAGE W/O RADIO	$370.00	$0.00
0	1101017	LEFT HAND AND RIGHT HAND "WEST COAST" STYLE MIRRORS HEATED & MOTORIZED. (DOES NOT HEAT OR MOTORIZE HOPPER CONVEX MIRRORS)	$1,240.00	$0.00
0	1101065	HEAVY DUTY DUAL LIMB GUARDS	$2,160.00	$0.00
0	1099918	HEAVY DUTY LIMB GUARD RIGHT HAND ONLY	$1,190.00	$0.00
0	1099919	HEAVY DUTY LIMB GUARD LEFT HAND ONLY	$1,190.00	$0.00
0	1101066	ASHTRAY & LIGHTER	$235.00	$0.00
0	1101244	AM/FM RADIO WITH CD & 2 MAP LIGHTS	$575.00	$0.00
0	1106698	GREASABLE CARBIDE DIRT SHOES	$1,310.00	$0.00
0	6063004	ADDITIONAL IGNITION KEY	$45.00	$0.00
0	1120655	25' WASHDOWN SYSTEM	$940.00	$0.00

-------REFLECTORS---------

0	1087538	REFLECTOR (ARMOURED) , SET OF 6	$150.00	$0.00

------SIDE BROOM TILT-----

0	1089502	LEFT HAND SIDEBROOM TILT WITH INDICATOR	$1,875.00	$0.00
0	1089503	RIGHT HAND SIDEBROOM TILT WITH INDICATOR	$1,875.00	$0.00

----------SEATS----------

0	1087555	RIGHT HAND BOSTROM AIR RIDE MID BACK CLOTH	$980.00	$0.00
0	1087556	LEFT HAND BOSTROM AIR RIDE MID BACK CLOTH	$980.00	$0.00
0	1087677	ALL VINYL STD SEAT	$15.00	$0.00
0	1088301	RIGHT HAND BOSTROM AIR RIDE HI BACK CLOTH	$980.00	$0.00
0	1088302	LEFT HAND BOSTROM AIR RIDE HI BACK CLOTH	$980.00	$0.00
0	1089316	RIGHT HAND BOSTROM AIR RIDE MID BACK -VINYL	$980.00	$0.00
0	1089317	LEFT HAND BOSTROM AIR RIDE MID BACK - VINYL	$980.00	$0.00
0	1089510	LEFT HAND MAGNUM STANDARD SEAT	$855.00	$0.00
0	1091686	LEFT HAND BOSTROM MID-BACK CLOTH	$1,630.00	$0.00
0	1093157	HEADREST FOR MAGNUM STD SEAT	$405.00	$0.00

---------SAFETY----------

0	1087559	(1) 2 1/2 LB. FIRE EXTINGUISHER	$215.00	$0.00
0	1088661	(2) 2 1/2 LB. FIRE EXTINGUISHER	$425.00	$0.00
0	1092020	REMOVE REAR CAMERA	N/C	$0.00
0	1101067	LEFT HAND SIDE CAMERA	$530.00	$0.00
0	1122587	RIGHT HAND SIDE CAMERA	$530.00	$0.00
0	9306848	TRIANGLE REFLECTIVE FLARES (3)	$80.00	$0.00

-----SWEEPER ENGINE-------

0	1121383	BLOCK HEATER	$445.00	$0.00
0	1120838	PREMIUM RADIATOR/HEATER HOSES	$280.00	$0.00
0	1120656	COLD WEATHER START AIDE	$550.00	$0.00
0	1087562	ENGINE PRE-CLEANER	$420.00	$0.00
0	1087675	BATTERY DISCONNECT SWITCH	$185.00	$0.00
0	1089774	MAGNETIC DRAIN PLUG	$160.00	$0.00
0	1120874	ENGINE COOLANT FILTER	$505.00	$0.00

MODEL: ECOINFUSED PELICAN NP 55KW
EFFECTIVE DATE: 10/03/2016
SUPERCEDES ALL PREVIOUS PRICE LISTS
DEALER PRICE LIST (U.S. DOLLARS)

QUANTITY	PART NUMBER	MODEL DESCRIPTION	2017 LIST PRICE	2017 EXTENDED

------TIRES/WHEELS--------

0	1101068	SPARE DRIVE WHEEL PAINTED GREY	$650.00	$0.00
0	1101069	SPARE GUIDE WHEEL PAINTED GREY	$590.00	$0.00
0	1101669	SPARE DRIVE WHEEL PAINTED GREY & TIRE (16 PLY)	$1,170.00	$0.00
0	1120585	SPARE GUIDE WHEEL PAINTED GREY & TIRE (16 PLY)	$945.00	$0.00

----------TOOLS----------

0	1036150	HYDRANT WRENCH	$90.00	$0.00
0	1049145	LUG WRENCH	$375.00	$0.00
0	1089549	RIGHT HAND LOCKABLE TOOLBOX W/HOSE BASKET W/O WASHDOWN SYSTEM	$1,030.00	$0.00
0	1121064	LEFT HAND LOCKABLE TOOL BOX	$1,030.00	$0.00
0	1090342	TOOL KIT (NO TOOL BOX)	$625.00	$0.00
0	1090584	MECHANICAL JACK RATCHET	$1,445.00	$0.00

----------PAINT----------

1	4810001	STANDARD WHITE	N/C	$0.00
0	4811018	RAL 1018 ZINC YELLOW	$515.00	$0.00
0	4811023	RAL 1023 TRAFFIC YELLOW	$515.00	$0.00
0	4811037	RAL 1037 SUN YELLOW	$515.00	$0.00
0	4813020	RAL 3020 TRAFFIC RED	$515.00	$0.00
0	SPECIAL	PAINT SWEEPER ANY OTHER RAL COLOR	$1,265.00	$0.00
0	SPECIAL	WHEELS PAINTED SAME COLOR AS BODY	$640.00	$0.00
0	SPECIAL	PAINT SWEEPER NON RAL COLOR	$3,830.00	$0.00
0	1118326	CUSTOM COLOR BODY PANELS	$0.00	$0.00

-------FREIGHT RATES-------

0	FRT-101-001	SELF SHIPPING DOCK CHARGE	$595.00	$0.00
0	FRT-101-002	FREIGHT-IL,WI,IA,IN,MI,MN,KY	$1,310.00	$0.00
0	FRT-101-003	FREIGHT-TN,WV,PA,NY	$2,850.00	$0.00
0	FRT-101-004	FREIGHT-NH,VT,ME	$3,555.00	$0.00
0	FRT-101-005	FREIGHT-NEW YORK CITY	$4,110.00	$0.00
0	FRT-101-006	FREIGHT-ND,SD,NE,OK,KS,AR,AL,MO	$2,715.00	$0.00
0	FRT-101-007	FREIGHT-AZ,UT	$5,390.00	$0.00
0	FRT-101-008	FREIGHT-CA,NV,ID,OR,WA	$6,355.00	$0.00
0	FRT-101-009	FREIGHT- CHICAGO/MILWAUKEE	$900.00	$0.00
0	FRT-101-010	FREIGHT-FL,LA,TX,NM,CO,WY,MT	$4,145.00	$0.00
0	FRT-101-011	FREIGHT-OH,ST.LOUIS METRO	$1,530.00	$0.00
0	FRT-101-012	FREIGHT,MS,GA,SC,NC,VA,MD	$3,130.00	$0.00
0	FRT-101-013	FREIGHT - RI,DE,CT,NJ,MA	$2,740.00	$0.00
0	FRT-101-014	FREIGHT - LAREDO, TX	$6,700.00	$0.00
0	FRT-101-015	SPECIALIZED TRANSPORT EQUIPMENT	$1,030.00	$0.00

--------WARRANTY----------

0	EW-NP-NA-2PL	PELICAN NP 2ND YEAR PARTS/LABOR	$3,230.00	$0.00
0	EW-NP-NA-3PL	PELICAN NP 3RD YEAR PARTS/LABOR	$4,760.00	$0.00
0	EW-NP-NA-4PL	PELCIAN NP 4TH YEAR PARTS/LABOR	$7,815.00	$0.00
0	EW-NP-NA-5PL	PELICAN NP 5TH YEAR PARTS/LABOR	$11,040.00	$0.00

SUB TOTAL	**$3,930.00**

-----DISCOUNTS-----

0	DISC-101-ADDL	ADDITIONAL DISCOUNT	$0.00	$0.00
0	DISC-101-PROMO	PROMO DISCOUNT	$0.00	$0.00

SPECIAL RFQ OPTIONS / OTHER DESCRIPTIONS

GRAND TOTAL	**$3,930.00**

This is Bell Equipment's 9/15/16 price list for the MIDeal quote

MODEL: ROAD WIZARD
EFFECTIVE DATE: 10/03/2016
SUPERCEDES ALL PREVIOUS PRICE LISTS
PRICE LIST (U.S. DOLLARS)

Purchase Order #	
Order Date:	
Delivery Date Requirment If Any:	

Ship To Address:
State Penalty Clause If Applicable:

QUANTITY	PART NUMBER	MODEL DESCRIPTION	2016 PRICE	2016 EXTENDED	2017 MIDeal PRICE
0	1117859	**ROAD WIZARD - DUAL (AUTOCAR)**	$171,500	$0.00	$173,215.00
		Conveyor squeegee, dual, hydraulically driven side brooms, variable height, right side dumping hopper. sweeper is powder coated from powder coatings chart 2003/N with powder coated gray undercarriage and includes the standard features listed below.			
0	1119865	**ROAD WIZARD - DUAL (M2)**	$171,500	$0.00	$173,215.00
		Conveyor squeegee, dual, hydraulically driven side brooms, variable height, right side dumping hopper. sweeper is powder coated from powder coatings chart 2003/N with powder coated gray undercarriage and includes the standard features listed below.			
0	1120036	**ROAD WIZARD - DUAL (IH)**	$171,500	$0.00	$173,215.00
		Conveyor squeegee, dual, hydraulically driven side brooms, variable height, right side dumping hopper. sweeper is powder coated from powder coatings chart 2003/N with powder coated gray undercarriage and includes the standard features listed below.			
0	SPECIAL	**ROAD WIZARD - DUAL (PETERBILT)**	$171,500	$0.00	
		Conveyor squeegee, dual, hydraulically driven side brooms, variable height, right side dumping hopper. sweeper is powder coated from powder coatings chart 2003/N with powder coated gray undercarriage and includes the standard features listed below.			

CHASSIS

0	1119131	2016 M2 DUAL STEER (2013 EMISSIONS) LIMITED QTY (NON STOCKED CHASSIS)	CONTACT FACTORY	$0.00
0	1119519	2016 AUTOCAR DUAL STEER LIMITED QTY	CONTACT FACTORY	$0.00
0	SPECIAL	CANADIAN COMPLIANCE AND DAYTIME RUNNING LIGHTS FOR AUTOCAR	$725	$0.00
0	1120245	2016 PETERBILT RIGHT HAND STEER (NON STOCKED CHASSIS) SINGLE SPEED REAR AXLE	CONTACT FACTORY	$0.00
0	1119177	2016 PETERBILT DUAL STEER (NON STOCKED CHASSIS) SINGLE SPEED REAR AXLE	CONTACT FACTORY	$0.00
0	1119276	2016 IH DUAL STEER (NON STOCKED CHASSIS)	CONTACT FACTORY	$0.00

CHASSIS MOUNTING CHARGE

0	1119864	M2 - CHASSIS ALTERATIONS	$2,135	$0.00
0	1114649	AUTOCAR - CHASSIS ALTERATIONS	$2,135	$0.00
0	1120180	INTERNATIONAL - CHASSIS ALTERATIONS	$2,135	$0.00
0	SPECIAL	PETERBILT - CHASSIS ALTERATIONS	$2,135	$0.00
0	SPECIAL	CUSTOMER SUPPLIED CHASSIS ALTERATIONS	CONTACT INSIDE SALES	$0.00
0		CUSTOMER SUPPLIED HANDLING CHARGE	$2,815	$0.00

NOTE: Customer Supplied Cassis Requires Both The Chassis Alterations and the Handling Charge

NOTE: A BODY includes the cost of Elgin standard white finish paint. It does not however, include the price of the chassis.

NOTE: The chassis being supplied by a customer or dealer must comply completely with all Elgin requirements or the chassis will be modified at dealer's expense.

NOTE: For cost of sweeper mounted on any other chassis, consult factory.

NOTE: One year warranty on all Elgin supplied parts and labor. Consult your Elgin dealer for full warranty details.

MODEL: ROAD WIZARD

SUPERCEDES ALL PREVIOUS PRICE LISTS
PRICE LIST (U.S. DOLLARS)

STANDARD FEATURES

Aux-engine;
Two-stage dry type with restriction indicator (at engine) and precleaner
Broom side, 46 "steel vertical digger 4 or 5 segment

Hydraulic oil level gauge w/ external thermomenter and in-cab level light
Lights, automatic backup

Broom side, hydraulic floating suspension, hydraulic deploy
Broom, main, 34" diameter, 60" wide prefab disposable
Camera, Rear with in-cab monitor
Conveyor chain, hardened with polyurethane sprockets
Conveyor, 11 flight squeegee with rubber edging
Conveyor, lift independent from main broom
Conveyor, three piece replaceable wear plates
Conveyor flush out system
Conveyor rasie in reverse
Conveyor stall alarm
Dirt shoes, heavy duty single row carbide steel (rubber isolated)
Electric backup alarm
Engine, sweeper, diesel, tier 4 FINAL, 74 HP
Hopper inspection door
Hopper, 5.4 cu yd with window and skylight
Hopper up visual audible indicator
Hopper, variable high dump, 10', 5.4 yard
Hose, hydrant fill, 16'8" (5080 mm) with strainer and coupling
Lights, combination tail/stop, separate amber signal
Lights, flood light, one per broom (3)
Manuals, operator and parts
Rear broom cover and anti-carryover wrap
Rear broom spray bar
Rear right hand flood light
Reflectors, set of 2
Sidebroom speed control, external to cab
Sweep resume / raise in reverse
Tactile controls for all sweep functions
Tool storage
Variable speed brooms (external)
Water fill, anti-siphon
Water level indicator in-cab
Water Pump, electric diaphragm
Water tank, molded polyethylene, 360 gallon total nominal capacity

QUANTITY	PART NUMBER	MODEL DESCRIPTION	2016 PRICE	2016 EXTENDED	2017 MIDeal PRICE
		-----ADDITIONAL MANUALS----			
0	0701680	ROAD WIZARD OPERATORS MANUAL	$50.00	$0.00	$50.50
0	0702460	ROAD WIZARD SERVICE MANUAL	$95.00	$0.00	$95.95
0	0702240	ROAD WIZARD PARTS BOOK	$95.00	$0.00	$95.95
0	0704072	CUMMINS OPERATORS & MAINTENANCE MANUAL	$130.00	$0.00	$131.30
0	0704073	CUMMINS TROUBLESHOOTING MANUAL	$175.00	$0.00	$176.75
		--------ALARMS----------			
0	1117644	ECCO SA940 SMART ALARM (ILO of STD)	$270.00	$0.00	$272.70
0	1101528	LATCHING ELEVATOR REVERSE AND ALARM	$385.00	$0.00	$388.85
0	1104970	HOPPER UP CONSTANT ALARM	$355.00	$0.00	$358.55
0	1104705	HOPPER FULL INDICATOR	$770.00	$0.00	$777.70
		-------AUTO LUBE----------			
0	1101559	MIDWEST AUTO LUBE - SWEEPER ONLY	$4,835.00	$0.00	$4,883.35
		----------BROOMS---------			
0	1035616	DOUBLE WRAP MAIN BROOM	$445.00	$0.00	$449.45
0	1035617	POLY/WIRE WAFER MAIN BROOM	$520.00	$0.00	$525.20
0	1035621	(1) ALUMINUM SIDE BROOM SEGMENT PER SIDE	$505.00	$0.00	$510.05
0	1058156	STRIP MAIN BROOM (MILWAUKEE)	$485.00	$0.00	$489.85
0	1058158	STRIP MAIN BROOM (URB)	$250.00	$0.00	$252.50
0	1077151	URB STRIP MAIN BROOM W/CENTER SWEEP MANDREL	$250.00	$0.00	$252.50
0	1095046	ALUMINUM SIDE BROOM SEGMENTS - BLUE STEEL	$320.00	$0.00	$323.20
0	1096691	DEDUCT MAIN BROOM & CORE	-$435.00	$0.00	-$435.00
		--------DECALS----------			
0	1101151	RED LOG/SWOOSH - ROAD WIZARD	N/C	$0.00	N/C
0	1101152	WHITE LOGO/SWOOSH - ROAD WIZARD	N/C	$0.00	N/C
0	1101037	SLOW MOVING VEHICLE SIGN	$150.00	$0.00	$151.50
		----------GAUGES----------			
0	1119940	IN-CAB AUXILIARY ENGINE AIR RESTRICTION GAUGE	$755.00	$0.00	$762.55
0	1101379	BROOM HOUR METERS	$370.00	$0.00	$373.70
0	1111656	HYDRAULIC OIL TEMP DISPLAY (IN CAB)	$345.00	$0.00	$348.45
		----------HOPPER----------			
0	1110020	HOPPER INTERIOR LIGHT	$765.00	$0.00	$772.65
0	1104350	LIFELINER HOPPER SYSTEM W/WARRANTY	$5,410.00	$0.00	$5,464.10
0	SPECIAL	STAINLESS STEEL HOPPER	$10,640.00	$0.00	$10,746.40

MODEL: ROAD WIZARD

SUPERCEDES ALL PREVIOUS PRICE LISTS
PRICE LIST (U.S. DOLLARS)

QUANTITY	PART NUMBER	MODEL DESCRIPTION	2016 PRICE	2016 EXTENDED	2017 MIDeal PRICE
		---------LIGHTS----------			
0	1103553	PACKAGE 1 : SINGLE REAR/SINGLE HOPPER BEACON; LED WITH GUARD	$1,930.00	$0.00	$1,949.30
0	1103533	PACKAGE 2 : DUAL REAR/SINGLE HOPPER BEACON; LED WITH GUARD	$2,635.00	$0.00	$2,661.35
0	1103536	PACKAGE 3 : DUAL REAR/SINGLE HOPPER BEACON; LED WITH GUARD & LED ARROWSTICK	$4,060.00	$0.00	$4,100.60
0	1104618	PACKAGE 4 : SINGLE REAR/SINGLE HOPPER MOUNT AND GUARD - W/O BEACONS	$1,570.00	$0.00	$1,585.70
0	1104619	PACKAGE 5 : DUAL REAR/SINGLE HOPPER MOUNT AND GUARD - W/O BEACONS	$1,955.00	$0.00	$1,974.55
0	1102735	LED STOP/TAIL/TURN/REAR ID/CLEARANCE LIGHTS	$340.00	$0.00	$343.40
0	1102759	REAR MOUNTED LED ARROWSTICK	$1,700.00	$0.00	$1,717.00
0	1102736	(2) REAR LOW MOUNTED OVAL AMBER LED FLASHERS	$455.00	$0.00	$459.55
0	1103898	(2) REAR HIGH MOUNTED OVAL AMBER LED FLASHERS	$560.00	$0.00	$565.60
0	1104481	ARROWBOARD - REAR	$2,020.00	$0.00	$2,040.20
0	1114836	(3) LED WORK LIGHTS (1 EACH SIDE BROOM, 1 ON MAINBROOM)	$495.00	$0.00	$499.95
0	1114837	(4) LED WORK LIGHTS (1 EACH SIDE BROOM, 2 ON MAINBROOM)	$795.00	$0.00	$802.95

		----------PAINT----------			
0	4810001	PAINT SWEEPER STANDARD WHITE	N/C	$0.00	N/C
0	4811018	PAINT SWEEPER YELLOW RAL 1018	$500.00	$0.00	$505.00
0	4811023	PAINT SWEEPER YELLOW RAL 1023	$500.00	$0.00	$505.00
0	4811037	PAINT SWEEPER YELLOW RAL 1037	$500.00	$0.00	$505.00
0	4813020	PAINT SWEEPER TRAFFIC RED RAL 3020	$500.00	$0.00	$505.00
0	SPECIAL	PAINT SWEEPER ANY OTHER RAL COLOR	$1,250.00	$0.00	$1,262.50
0	SPECIAL	PAINT SWEEPER NON RAL COLOR	$3,790.00	$0.00	$3,827.90
0	1069927	ANTI GRAFFITI COATING	$3,760.00	$0.00	$3,797.60
		-------PM10 OPTIONS-------			
0	1115479	PM10 COMPLIANT (RULE 1186)	$3,060.00	$0.00	$3,090.60
		----------SAFETY----------			
0	1104991	REMOVE REAR CAMERA	N/C	$0.00	N/C
0	1095548	LEFT HAND SIDE CAMERA	$575.00	$0.00	$580.75
0	9306848	TRIANGLE REFLECTIVE FLARES (3)	$75.00	$0.00	$75.75
		-------SWEEP COMPONTENTS--			
0	1100656	SIDE BROOM TILT - RIGHT	$1,200.00	$0.00	$1,212.00
0	1100660	SIDE BROOM TILT - LEFT	$1,200.00	$0.00	$1,212.00
0	1117070	SIDE BROOM TILT W/INDICATOR - RIGHT	$1,200.00	$0.00	$1,212.00
0	1117071	SIDE BROOM TILT W/INDICATOR - LEFT	$1,200.00	$0.00	$1,212.00
0	1101385	RUBBER MOUNTED CARBIDE DRAG SHOES TWO-ROW (ILO STD)	$765.00	$0.00	$772.65
0	1102732	RUBBER DRAG-SHOES (ILO STD)	$115.00	$0.00	$116.15
0	1104238	BORON DRAG SHOES	$125.00	$0.00	$126.25
0	1117430	IN-CAB VARIABLE SPEED ELEVATOR/CONVEYOR **(MUST ORDER 1103612 SIDE BROOM REVERSE)**	$3,260.00	$0.00	$3,292.60
0	1103612	IN-CAB SIDEBROOM SPEED CONTROLS, REVERSING	$2,000.00	$0.00	$2,020.00
0	1114619	RUBBER BELT CONVEYOR (ILO STANDARD SQUEEGEE)	N/C	$0.00	N/C
0	1106049	HEAVY DUTY LOWER ROLLER **(MUST SELECT RUBBER BELT CONVEYOR OPTION)**	$1,000.00	$0.00	$1,010.00
0	1116316	LOWER CONVEYOR DEFLECTOR **(MUST SELECT RUBBER BELT CONVEYOR OPTION)**	$515.00	$0.00	$520.15
		-------SWEEPER ENGINE-----			
0	1120322	AUXILIARY ENGINE BATTERY DISCONNECT SWITCH	$505.00	$0.00	$510.05
0	6063004	EXTRA KEY	$45.00	$0.00	$45.45
0	SPECIAL	AUXILIARY WATER FILTER - PERRY	$450.00	$0.00	$454.50
0	1102752	SYKLONE PRE CLEANER	$635.00	$0.00	$641.35
0	1119563	BLOCK HEATER	$440.00	$0.00	$444.40
		-----TOOLS/TOOLBOXES------			
0	1053426	TOOL KIT	$735.00	$0.00	$742.35
0	1057687	TOOL BOX W/TOOLS	$710.00	$0.00	$717.10
0	1036150	HYDRANT WRENCH	$85.00	$0.00	$85.85

MODEL: ROAD WIZARD

SUPERCEDES ALL PREVIOUS PRICE LISTS
PRICE LIST (U.S. DOLLARS)

QUANTITY	PART NUMBER	MODEL DESCRIPTION	2016 PRICE	2016 EXTENDED	2017 MIDeal PRICE
		--------WATER SYSTEM------			
0	1032484	25' WATER FILL HOSE (ILO 16' 8")	$190.00	$0.00	$191.90
0	1121010	AIR PURGE FOR WATER SYSTEM	$365.00	$0.00	$368.65
0	1114604	WATER SIDEBROOM FUNCTION CONTROL (ILO MANUAL) **(USE WITHOUT EXTENDED SIDEBROOM REACH)**	$420.00	$0.00	$424.20
0	1121611	WATER SIDEBROOM FUNCTION CONTROL (ILO MANUAL) **(USE WITH EXTENEDED SIDEBROOM REACH)**	$420.00	$0.00	$424.20
		-----M2 CHASSIS OPTIONS-----			
0	0704005	M2 PARTS BOOK	$405.00	$0.00	$409.05
0	0704006	M2 OPERATOR BOOK	$50.00	$0.00	$50.50
0	0704007	M2 SERVICE MANUAL	$330.00	$0.00	$333.30
0	1071235	FUEL CAP SAFETY LOCK	$215.00	$0.00	$217.15
0	1075400	AM/FM/CD RADIO	$890.00	$0.00	$898.90
0	1080756	FENDER MOUNTED MIRROR-LEFT HAND	$505.00	$0.00	$510.05
0	1109607	12" CONVEX MIRRORS (IL0 STD 8")	$315.00	$0.00	$318.15
0	1081188	SPARE CHASSIS KEY	$45.00	$0.00	$45.45
0	1081365	IN CAB AIR FILTER RESTRICTION INDICATOR	$830.00	$0.00	$838.30
0	1121035	(2) AIR CLOTH HI-BACK SEATS	$1,970.00	$0.00	$1,989.70
0	1121036	(1) AIR CLOTH HI-BACK SEAT	$1,015.00	$0.00	$1,025.15
0	1120505	SPARE TIRE & WHEEL, BALANCED	$1,325.00	$0.00	$1,338.25
0	1081909	SINGLE ARM REST - VINYL **(ONLY W/AIR RIDE SEATS)**	$360.00	$0.00	$363.60
0	1081910	DUAL ARM REST - VINYL **(ONLY W/AIR RIDE SEATS)**	$680.00	$0.00	$686.80
0	1081911	SINGLE ARM REST - CLOTH **(ONLY W/AIR RIDE SEATS)**	$360.00	$0.00	$363.60
0	1081912	DUAL ARM REST - CLOTH **(ONLY W/AIR RIDE SEATS)**	$680.00	$0.00	$686.80
0	1081956	DAYTIME RUNNING LIGHTS	$1,050.00	$0.00	$1,060.50
0	1072443	MASTER BATTERY SWITCH	$520.00	$0.00	$525.20
0	1090653	DUAL AIR HORNS	$1,560.00	$0.00	$1,575.60
0	1101560	MIDWEST AUTOLUBE - SWEEPER/TRUCK	$7,040.00	$0.00	$7,110.40
0	1101567	2 1/2 LB. FIRE EXTINGUISHER	$210.00	$0.00	$212.10
0	1101568	5 LB. FIRE EXTINGUISHER	$240.00	$0.00	$242.40
0	4820001	CAB STANDARD WHITE	N/C	$0.00	N/C

0	SPECIAL	VOGEL AUTOLUBE - SWEEPER/TRUCK	$11,095.00	$0.00	$11,205.95
0	1063734	M2 (IN STOCK) CAB SPECIAL COLOR	$3,775.00	$0.00	$3,812.75
0	SPECIAL	TRUCK RIMS - ALL	$1,165.00	$0.00	$1,176.65
0	1108053	FULL WIDTH FRONT SPRAY BAR	$975.00	$0.00	$984.75
0	1120361	EXTENDED REACH RIGHT HAND SIDEBROOM	$1,345.00	$0.00	$1,358.45
0	1120782	EXTENDED REACH RIGHT AND LEFT HAND SIDEBROOMS	$1,890.00	$0.00	$1,908.90

-----NAVISTAR CHASSIS OPTIONS-----

0	4820001	CAB STANDARD WHITE	N/C	$0.00	N/C
0	1063731	NAV CAB PAINTED SPECIAL COLOR	$3,635.00	$0.00	$3,671.35
0	SPECIAL	TRUCK RIMS - ALL	$1,165.00	$0.00	$1,176.65
0	SPECIAL	SPARE TIRE & WHEEL, BALANCED	$1,325.00	$0.00	$1,338.25
0	1086733	LEFT HAND FENDER MOUNTED MIRROR	$505.00	$0.00	$510.05
0	1101568	5 LB. FIRE EXTINGUISHER	$240.00	$0.00	$242.40
0	1091761	EXTRA KEY	$55.00	$0.00	$55.55
0	1091770	(2) ELECTRIC & (1) AIR HORN	$1,870.00	$0.00	$1,888.70
0	1097641	NATIONAL AIR RIDE SEAT - PASSENGER SIDE - VINYL	$2,325.00	$0.00	$2,348.25
0	1097642	NATIONAL AIR RIDE SEAT-PASSENGER SIDE- VINYL W/ARM REST	$2,480.00	$0.00	$2,504.80
0	1097643	NATIONAL AIR RIDE SEAT-PASSENGER SIDE - CLOTH	$2,200.00	$0.00	$2,222.00
0	1097644	NATIONAL AIR RIDE SEAT-PASSENGER SIDE- CLOTH W/ARM REST	$2,340.00	$0.00	$2,363.40
0	1097645	NATIONAL AIR RIDE SEAT - DRIVER SIDE - VINYL	$2,060.00	$0.00	$2,080.60
0	1097646	NATIONAL AIR RIDE SEAT - DRIVER SIDE - VINYL W/ARM REST	$2,200.00	$0.00	$2,222.00
0	1097647	NATIONAL AIR RIDE SEAT - DRIVER SIDE - CLOTH	$2,200.00	$0.00	$2,222.00
0	1097648	NATIONAL AIR RIDE SEAT - DRIVER SIDE - CLOTH W/ARM REST	$2,525.00	$0.00	$2,550.25
0	1099317	(1) ELECTRIC HORN	$285.00	$0.00	$287.85
0	1091822	AM/FM/CD RADIO	$890.00	$0.00	$898.90
0	1101567	2 1/2 LB. FIRE EXTINGUISHER	$210.00	$0.00	$212.10
0	1117611	FULL WIDTH FRONT SPRAY BAR	$1,200.00	$0.00	$1,212.00
0	1120361	EXTENDED REACH RIGHT HAND SIDEBROOM	$1,345.00	$0.00	$1,358.45
0	1120782	EXTENDED REACH RIGHT AND LEFT HAND SIDEBROOMS	$1,890.00	$0.00	$1,908.90

MODEL: ROAD WIZARD

SUPERCEDES ALL PREVIOUS PRICE LISTS
PRICE LIST (U.S. DOLLARS)

QUANTITY	PART NUMBER	MODEL DESCRIPTION	2016 PRICE	2016 EXTENDED	2017 MIDeal PRICE
		----AUTOCAR XPERT CHASSIS OPTIONS----			
0	1107216	RAIN FLAPPER EXHAUST	$380.00	$0.00	$383.80
0	1107220	2 BATTERIES, 31 ECL, 12V, 1900CCA	$640.00	$0.00	$646.40
0	1107230	AUTO AIR DRAIN VALVE	$840.00	$0.00	$848.40
0	1107232	BATTERY DISCONNECT	$1,330.00	$0.00	$1,343.30
0	1107236	DUAL UNDERCAB AIR HORN	$1,325.00	$0.00	$1,338.25
0	1107238	ISRI HT914 HIGH BACK, AIR RIDE, RH	$2,075.00	$0.00	$2,095.75
0	1107239	ISRI HT914 HIGH BACK, AIR RIDE, LH	$2,075.00	$0.00	$2,095.75
0	1107243	IN CAB AIR RESTRICTOR	$540.00	$0.00	$545.40
0	1107244	DAYTIME RUNNING LIGHTS (US ONLY)	$525.00	$0.00	$530.25
0	1107245	PAINT OUTSIDE CAB	$5,985.00	$0.00	$6,044.85
0	1107247	PAINT WHEEL RIMS	$1,165.00	$0.00	$1,176.65
0	1107252	5 YEAR - ALLISON TRANSMISSION	$710.00	$0.00	$717.10
0	1108459	5 YEAR WARRANTY - 100,000 Miles	$8,355.00	$0.00	$8,438.55
0	1108945	AM/FM RADIO WITH CD	$890.00	$0.00	$898.90
0	1109228	2 YEAR WARRANTY - 100,000 Miles	$2,095.00	$0.00	$2,115.95
0	1109229	3 YEAR WARRANTY - 100,000 Miles	$4,180.00	$0.00	$4,221.80
0	1109230	4 YEAR WARRANTY - 100,000 Miles	$5,985.00	$0.00	$6,044.85
0	1109244	EXTRA KEY	$110.00	$0.00	$111.10
0	SPECIAL	SPARE TIRE / WHEEL	$1,325.00	$0.00	$1,338.25
0	SPECIAL	VANDALL PROTECTION PACKAGE	$815.00	$0.00	$823.15
0	SPECIAL	MAINBROOM MILEAGE INDICATOR	$315.00	$0.00	$318.15
0	1120374	2 1/2 LB. FIRE EXTINGUISHER	$210.00	$0.00	$212.10
0	1120375	5 LB. FIRE EXTINGUISHER	$240.00	$0.00	$242.40
0	SPECIAL	(4) 7" FLASHING AMBER LIGHTS (2 FRONT & 2 REAR)	$850.00	$0.00	$858.50
0	1116212	2014 AUTOCAR SERVICE MANUAL 2010 EMISSIONS- CD	$655.00	$0.00	$661.55
0	1109605	EXTENDED REACH RIGHT HAND SIDEBROOM	$1,890.00	$0.00	$1,908.90
0	1105519	EXTENDED REACH RIGHT AND LEFT HAND SIDEBROOMS	$1,850.00	$0.00	$1,868.50

MODEL: ROAD WIZARD

SUPERCEDES ALL PREVIOUS PRICE LISTS
PRICE LIST (U.S. DOLLARS)

QUANTITY	PART NUMBER	MODEL DESCRIPTION	2016 PRICE	2016 EXTENDED	2017 MIDeal PRICE
		---------WARRANTY---------			
0	EWME-NA-2PL	ROAD WIZARD 2ND YEAR PARTS/LABOR	$2,650.00	$0.00	$ 2,705.00
0	EWME-NA-3PL	ROAD WIZARD 3RD YEAR PARTS/LABOR	$4,995.00	$0.00	$ 5,100.00
0	EWME-NA-4PL	ROAD WIZARD 4TH YEAR PARTS/LABOR	$7,105.00	$0.00	$ 7,250.00
0	EWME-NA-5PL	ROAD WIZARD 5TH YEAR PARTS/LABOR	$9,100.00	$0.00	$ 9,290.00
		------FREIGHT RATES------			
0	FRT-116-001	SELF SHIPPING DOCK CHARGE	$595.00	$0.00	
0	FRT-116-002	FREIGHT-IL,WI,IA,IN,MI,MN,KY	$1,310.00	$0.00	
0	FRT-116-003	FREIGHT-TN,WV,PA,NY	$2,850.00	$0.00	
0	FRT-116-004	FREIGHT-NH,VT,ME	$3,555.00	$0.00	
0	FRT-116-005	FREIGHT-NEW YORK CITY	$4,110.00	$0.00	
0	FRT-116-006	FREIGHT-ND,SD,NE,OK,KS,AR,AL,MO	$2,715.00	$0.00	
0	FRT-116-007	FREIGHT-AZ,UT	$5,390.00	$0.00	
0	FRT-116-008	FREIGHT-CA,NV,ID,OR,WA	$6,355.00	$0.00	
0	FRT-116-009	FREIGHT- CHICAGO/MILWAUKEE	$900.00	$0.00	
0	FRT-116-010	FREIGHT-FL,LA,TX,NM,CO,WY,MT	$4,145.00	$0.00	
0	FRT-116-011	FREIGHT-OH,ST.LOUIS METRO	$1,530.00	$0.00	
0	FRT-116-012	FREIGHT,MS,GA,SC,NC,VA,MD	$3,130.00	$0.00	
0	FRT-116-013	FREIGHT - RI,DE,CT,NJ,MA	$2,740.00	$0.00	
0	FRT-116-014	FREIGHT - LAREDO, TX	$6,700.00	$0.00	
0	FRT-116-015	SPECIALIZED TRANSPORT EQUIPMENT	$1,030.00	$0.00	
			SUB TOTAL	**$0.00**	
		-----DISCOUNTS-----			
0	DISC-116-ADDL	ADDITIONAL DISCOUNT	$0.00	$0.00	

SPECIAL RFQ OPTIONS / OTHER DESCRIPTIONS

GRAND TOTAL	**$0.00**

This is Bell Equipment's 9/15/16 price list for the MIDeal quote

MODEL: WATERLESS PELICAN P T4F 99HP
EFFECTIVE DATE: 10/032016
SUPERCEDES ALL PREVIOUS PRICE LISTS
PRICE LIST (U.S. DOLLARS)

Purchase Order #	
Order Date:	
Delivery Date Requirment If Any:	

Ship To Address:
State Penalty Clause If Applicable:

QUANTITY	PART NUMBER	MODEL DESCRIPTION	2016 PRICE	2016 EXTENDED	2017 MIDeal PRICE
		TIER 4F ENGINE			
0	1121610	**WATERLESS PELICAN P DUAL TIER 4F 99HP**	$233,270	$0.00	**$235,602.70**
		Dust control skirts, dust extraction fan and filtered air exhaust, with dual hydraulically driven gutter brooms, Tier 4F 99HP JD 4045TF emission diesel engine, hydrostatic drive and steering, chassis and wheels powder coated standard white and including the standard features below.			

NOTE: One year warranty on all Elgin supplied parts and labor. Consult your Elgin dealer for full warranty details.

STANDARD FEATURES

Air cleaner,dry type w/safety element and restriction indicator
Air conditioner
Alternator, 120 amp
Anti Siphon water fill
Automatic engine shutdown (oil pressure/engine temperature)
Automatic pickup in reverse
B20 biodiesel compatible
Back up alarm, electric
Battery, maintenance free
Brakes, power
Broom, main, hydraulically suspended
Broom, main, in cab pressure control
Broom, main, prefab, disposable
Broom, side broom, hydraulically suspended
Broom, side broom, in cab pressure control
Bumper pads, front jack
Coolant recovery system
Doors, see through glass, prop-able
Electronic Throttle
Engine, hour meter
Gauges & Warning lights:
  engine oil temperature
  engine oil pressure
  fuel level
  speedometer & odometer w/trip set
Fenders, over front wheels
Flushing system for hopper/conveyor
Fuel tank, 35 gallons
Fuel Water separator with indicator light
Heater, pressurizer with filtered air, defroster
Hose, hydrant fill, 16' 8" with coupling
Light, spotlight, adjustable, one per side broom
Lights, 2 combination, tail/stop lights
Lights, headlights, multiple beam
Lights, low water light
Low Hydraulic Warning
Lower roller wash out.
Main broom controls in cab
Manuals, operator and parts
Mirror, inside rear view
Mirrors, outside, front mounted 6" fish eyes
Mirrors, outside, front post mounted, west coast type, one each side
Parking brake with interlock
Rear Camera & in cab monitor
Return to sweep feature
Seat Belts (both sides for dual)
Seats, extra wide cordura suspension seats with arm rests
Signals, self-canceling directional with hazard switch
Sprung guide wheel, heavy duty
Steering wheel, tilt and telescoping
Sun visors
Tachometer, diesel engine
Tires, tubeless radials
Tow loops, four
Water tank, Aluminum:
  35 gallon total nominal capacity
Wheels, dual guide
Wheels painted grey
Window, opening front opera
Windshield washer
Windshield wipers with intermittent setting
Windshield, tinted

MODEL: WATERLESS PELICAN P T4F 99HP

SUPERCEDES ALL PREVIOUS PRICE LISTS
PRICE LIST (U.S. DOLLARS)

QUANTITY	PART NUMBER	MODEL DESCRIPTION	2016 PRICE	2016 EXTENDED	2017 MIDeal PRICE
		----------ALARMS----------			
0	1089339	SMART BACK UP ALARM	$270.00	$0.00	**$272.70**
0	1089728	GROTE LOUD MOUTH BACKUP ALARM	$270.00	$0.00	**$272.70**
		------AUTO LUBE----------			
0	1096746	MIDWEST AUTO LUBE - DUAL	$6,115.00	$0.00	**$6,176.15**
0	1097099	VOGEL AUTO LUBE - DUAL	$6,925.00	$0.00	**$6,994.25**
0	1119952	MIDWEST AUTO LUBE - DUAL USE W/GREASABLE DIRT SHOES	$7,040.00	$0.00	**$7,110.40**
		------AUTO SHUTDOWN-------			
0	1087563	HYDRAULIC LEVEL SHUTDOWN	$390.00	$0.00	**$393.90**
0	1089429	HYDRAULIC LEVEL & TEMPERATURE SHUTDOWN	$465.00	$0.00	**$469.65**

0	1089777	HYDRAULIC TEMPERATURE SHUTDOWN	$90.00	$0.00	**$90.90**
		---------BROOMS----------			
0	1089518	DEDUCT MAIN BROOM & CORE	-$465.00	$0.00	**-$469.65**
0	1091361	STRIP BROOM CENTER SWEEP	$875.00	$0.00	**$883.75**
0	1094877	ALUMINUM SIDE BROOM SEGMENT PER SIDE	$625.00	$0.00	**$631.25**
0	1094878	POLY/POLY SIDE BROOM SET	$120.00	$0.00	**$121.20**
0	1118360	DOUBLE WRAP MAIN BROOM (ILO STD)	$995.00	$0.00	**$1,004.95**
0	1118361	MAIN BROOM CORE ONLY	-$160.00	$0.00	**-$160.00**
		----CONVEYOR/ELEVATOR-----			
0	1087545	CONVEYOR STALL ALARM	$695.00	$0.00	**$701.95**
0	1087575	LOWER ROLLER DEFLECTOR	$485.00	$0.00	**$489.85**
		----------GAUGES----------			
0	1087539	MAINBROOM ODOMETER/HOUR METER	$370.00	$0.00	**$373.70**
0	1088858	CHARGE PRESSURE GAUGE-LOOSE	$295.00	$0.00	**$297.95**
0	1120827	IN CAB AIR RESTRICTION GAUGE	$360.00	$0.00	**$363.60**
		-----MANUALS----			
0	0702262	PELICAN P PARTS BOOK-NR	$90.00	$0.00	**$90.90**
0	0701466	PELICAN P OPERATORS MANUAL-NR	$45.00	$0.00	**$45.45**
0	0702454	PELICAN P SERVICE-NR	$90.00	$0.00	**$90.90**
0	0704058	JOHN DERRE POWERTECH TIER 4 SERVICE MANUAL	$185.00	$0.00	**$186.85**
0	0704056	JOHN DERRE 4045 TIER 4 OPERATOR MANUAL	$50.00	$0.00	**$50.50**
0	0704057	JOHN DERRE 4045 TIER 4 PARTS BOOK	$65.00	$0.00	**$65.65**
		-----LIFELINER SYSTEM / EPOXY COATING-----			
0	1096226	LIFELINER HOPPER SYSTEM W/WARRANTY	$3,890.00	$0.00	**$3,928.90**
		---------LIGHTS----------			
0	1121376	DUAL REAR FLOODS	$445.00	$0.00	**$449.45**
0	1087873	LED CLEARANCE LIGHTS	$255.00	$0.00	**$257.55**
0	1093229	(2) REAR FLOODS & BACKUP LIGHTS	$460.00	$0.00	**$464.60**
0	1094481	RIGHT HAND SEAL BEAM WORK LIGHT	$135.00	$0.00	**$136.35**
0	1094482	RIGHT HAND & LEFT HAND SEAL BEAM WORK LIGHTS	$250.00	$0.00	**$252.50**
0	1101214	(2) CAB FORWARD FACING FLOOD LIGHTS WITH LIGHT BAR	$415.00	$0.00	**$419.15**
0	1101215	(2) CAB FORWARD FACING FLOOD LIGHTS WITHOUT LIGHT BAR	$690.00	$0.00	**$696.90**
0	1101273	LED STOP/TAIL/TURN **NOT COMPATIABLE WITH LIGHT PACKAGES 3 & 4**	$340.00	$0.00	**$343.40**
0	1114404	(2) CAB FORWARD FACING LED FLOOD LIGHTS WITH LIGHT BAR	$1,070.00	$0.00	**$1,080.70**
0	1114405	(2) CAB FORWARD FACING LED FLOOD LIGHTS WITHOUT LIGHT BAR	$1,385.00	$0.00	**$1,398.85**
0	1120317	LED LIGHTS IN BATTERY COVER	$1,130.00	$0.00	**$1,141.30**
0	1121070	STROBES IN THE BATTERY COVER	$1,240.00	$0.00	**$1,252.40**
0	1101318	PACKAGE 5: ONE LED STROBE W/ GUARD	$935.00	$0.00	**$944.35**

MODEL: WATERLESS PELICAN P T4F 99HP

SUPERCEDES ALL PREVIOUS PRICE LISTS
PRICE LIST (U.S. DOLLARS)

QUANTITY	PART NUMBER	MODEL DESCRIPTION	2016 PRICE	2016 EXTENDED	2017 MIDeal PRICE
		---------LIGHTS CONTINUED----------			
0	1101319	PACKAGE 6: TWO LED STROBES W/ GUARD	$1,635.00	$0.00	**$1,651.35**
0	1101320	PACKAGE 7: PACKAGE 6 + FOUR ROOF MOUNTED SWEEP FLASHERS **LED STOP/TAIL/TURN MUST BE ORDERED WITH THIS PACKAGE**	$2,190.00	$0.00	**$2,211.90**
0	1101321	PACKAGE 8: PACKAGE 7 + LED FRONT ID LIGHTS AND REAR LED ARROW STICK **LED STOP/TAIL/TURN MUST BE ORDERED WITH THIS PACKAGE**	$3,635.00	$0.00	**$3,671.35**
0	1101322	PACKAGE 9: REAR LIGHT MOUNTING RAIL ONLY	$645.00	$0.00	**$651.45**
0	1101323	PACKAGE 10: FRONT LIGHT MOUNTING RAIL ONLY	$645.00	$0.00	**$651.45**
0	1101324	PACKAGE 11: REAR LIGHT MOUNTING RAIL AND WIRE/MOUNT/GUARD FOR 1 LIGHT	$710.00	$0.00	**$717.10**
0	1101325	PACKAGE 12: REAR LIGHT MOUNTING RAIL AND WIRE/MOUNT/GUARD FOR 2 LIGHTS	$1,190.00	$0.00	**$1,201.90**
0	1101326	PACKAGE 13: LED ARROWSTICK	$1,590.00	$0.00	**$1,605.90**
0	1105084	PACKAGE 14: LED ARROWSTICK (USE WITH PACKAGES 1, 2, 3, 5, 6, 7)	$1,590.00	$0.00	**$1,605.90**
		------PELICAN OPTIONS-----			
0	1087540	LICENSE PLATE HOLDER - FRONT & REAR	$200.00	$0.00	**$202.00**
0	1087541	LOCKING ENGINE COMPARTMENT	$215.00	$0.00	**$217.15**
0	1087605	CARBIDE DIRT SHOES	$1,060.00	$0.00	**$1,070.60**
0	1087981	RED LOGO/SWOOSH	N/C	$0.00	
1	1087982	WHITE LOGO/SWOOSH	N/C	$0.00	
0	1121767	GREASABLE DIRT SHOES	$85.00	$0.00	**$85.85**
0	1099915	STEEL RIGHT HAND DOOR W/ SLIDING WINDOW	$1,785.00	$0.00	**$1,802.85**

0	1099916	STEEL LEFT HAND DOOR W/ SLIDING WINDOW	$1,785.00	$0.00	**$1,802.85**
0	1099918	HEAVY DUTY LIMB GUARD RIGHT HAND ONLY	$1,175.00	$0.00	**$1,186.75**
0	1099919	HEAVY DUTY LIMB GUARD LEFT HAND ONLY	$1,175.00	$0.00	**$1,186.75**
0	1100256	RADIO INSTALL PACKAGE W/O RADIO	$365.00	$0.00	**$368.65**
0	1101017	LEFT HAND AND RIGHT HAND "WEST COAST" STYLE MIRRORS HEATED & MOTORIZED. **(DOES NOT HEAT OR MOTORIZE HOPPER CONVEX MIRRORS)**	$1,225.00	$0.00	**$1,237.25**
0	1101065	HEAVY DUTY DUAL LIMB GUARDS	$3,125.00	$0.00	**$3,156.25**
0	1101066	ASHTRAY & LIGHTER	$230.00	$0.00	**$232.30**
0	1101244	AM/FM RADIO WITH CD & 2 MAP LIGHTS	$565.00	$0.00	**$570.65**
0	1106586	INDUSTRIAL SWEEPING APPLICATION (POWDER) PACKAGE	N/C	$0.00	
0	1112079	BORON DIRT SHOES	$405.00	$0.00	**$409.05**
0	1121071	SLIDING REAR WINDOW	$870.00	$0.00	**$878.70**
0	SPECIAL	GREASABLE CARBIDE DIRT SHOES	$1,270.00	$0.00	**$1,282.70**
0	SPECIAL	ADDITIONAL IGNITION KEY	$40.00	$0.00	**$40.40**

-------REFLECTORS---------

0	1087538	REFLECTOR (ARMOURED) , SET OF 6	$145.00	$0.00	**$146.45**

------SIDE BROOM TILT-----

0	1089502	LEFT HAND SIDEBROOM TILT WITH INDICATOR	$2,355.00	$0.00	**$2,378.55**
0	1089503	RIGHT HAND SIDEBROOM TILT WITH INDICATOR	$2,355.00	$0.00	**$2,378.55**

----------SEATS----------

0	1087555	RIGHT HAND BOSTROM AIR RIDE MID BACK CLOTH	$970.00	$0.00	**$979.70**
0	1087556	LEFT HAND BOSTROM AIR RIDE MID BACK CLOTH	$970.00	$0.00	**$979.70**
0	1087677	ALL VINYL STD SEAT	$15.00	$0.00	**$15.15**
0	1088301	RIGHT HAND BOSTROM AIR RIDE HI BACK CLOTH	$970.00	$0.00	**$979.70**
0	1088302	LEFT HAND BOSTROM AIR RIDE HI BACK CLOTH	$970.00	$0.00	**$979.70**
0	1089316	RIGHT HAND BOSTROM AIR RIDE MID BACK -VINYL	$970.00	$0.00	**$979.70**
0	1089317	LEFT HAND BOSTROM AIR RIDE MID BACK - VINYL	$970.00	$0.00	**$979.70**
0	1089510	LEFT HAND MAGNUM STANDARD SEAT	$845.00	$0.00	**$853.45**
0	1091686	LEFT HAND BOSTROM MID-BACK CLOTH	$1,610.00	$0.00	**$1,626.10**
0	1093157	HEADREST FOR MAGNUM STD SEAT	$400.00	$0.00	**$404.00**

MODEL: WATERLESS PELICAN P T4F 99HP

SUPERCEDES ALL PREVIOUS PRICE LISTS
PRICE LIST (U.S. DOLLARS)

QUANTITY	PART NUMBER	MODEL DESCRIPTION	2016 PRICE	2016 EXTENDED	2017 MIDeal PRICE

---------SAFETY----------

0	1087559	(1) 2 1/2 LB. FIRE EXTINGUISHER	$210.00	$0.00	**$212.10**
0	1088661	(2) 2 1/2 LB. FIRE EXTINGUISHER	$420.00	$0.00	**$424.20**
0	1092020	REMOVE REAR CAMERA	N/C	$0.00	
0	1101067	LEFT HAND SIDE CAMERA	$525.00	$0.00	**$530.25**
0	SPECIAL	(3) TRIANGLE REFLECTIVE FLARES	$70.00	$0.00	**$70.70**

-----SWEEPER ENGINE-------

0	1087675	BATTERY DISCONNECT SWITCH	$180.00	$0.00	**$181.80**
0	1089774	MAGNETIC DRAIN PLUG	$155.00	$0.00	**$156.55**
0	1121051	PREMIUM RADIATOR/HEATER HOSES	$1,130.00	$0.00	**$1,141.30**
0	1121383	ENGINE COOLANT BLOCK HEATER	$440.00	$0.00	**$444.40**
0	SPECIAL	COLD WEATHER START AIDE	$530.00	$0.00	**$535.30**
0	1121306	ENGINE COOLANT FILTER	$500.00	$0.00	**$505.00**
0	SPECIAL	JOHN DEERE FUEL HEATER	$630.00	$0.00	**$636.30**

------TIRES/WHEELS--------

0	1101068	SPARE DRIVE WHEEL PAINTED GREY	$640.00	$0.00	**$646.40**
0	1103546	SPARE GUIDE WHEEL PAINTED GREY	$1,345.00	$0.00	**$1,358.45**
0	1101669	SPARE DRIVE WHEEL PAINTED GREY & GOODYEAR TIRE (16 PLY)	$1,155.00	$0.00	**$1,166.55**
0	1120585	SPARE GUIDE WHEEL PAINTED GREY & GOODYEAR TIRE (16 PLY)	$935.00	$0.00	**$944.35**

----------TOOLS----------

0	1036150	HYDRANT WRENCH	$85.00	$0.00	**$85.85**
0	1049145	LUG WRENCH	$370.00	$0.00	**$373.70**
0	1089549	RIGHT HAND LOCKABLE TOOLBOX W/HOSE BASKET	$1,020.00	$0.00	**$1,030.20**
0	1090342	TOOL KIT (NO TOOL BOX)	$615.00	$0.00	**$621.15**
0	1090584	MECHANICAL JACK RATCHET	$1,430.00	$0.00	**$1,444.30**
0	SPECIAL	LEFT HAND LOCKABLE TOOL BOX	$1,000.00	$0.00	**$1,010.00**

----------PAINT----------

0	4810001	STANDARD WHITE	N/C	$0.00	
0	4811018	RAL 1018 ZINC YELLOW	$510.00	$0.00	**$515.10**
0	4811023	RAL 1023 TRAFFIC YELLOW	$510.00	$0.00	**$515.10**
0	4811037	RAL 1037 SUN YELLOW	$510.00	$0.00	**$515.10**
0	4813020	RAL 3020 TRAFFIC RED	$510.00	$0.00	**$515.10**
0	SPECIAL	PAINT SWEEPER ANY OTHER RAL COLOR	$1,250.00	$0.00	**$1,262.50**
0	SPECIAL	WHEELS PAINTED SAME COLOR AS BODY	$630.00	$0.00	**$636.30**
0	SPECIAL	PAINT SWEEPER NON RAL COLOR	$3,790.00	$0.00	**$3,827.90**
0	1118326	CUSTOM COLOR BODY PANELS	$0.00	$0.00	**$0.00**

MODEL: WATERLESS PELICAN P T4F 99HP
EFFECTIVE DATE: 11/01/2015
SUPERCEDES ALL PREVIOUS PRICE LISTS
PRICE LIST (U.S. DOLLARS)

QUANTITY	PART NUMBER	MODEL DESCRIPTION	2016 PRICE	2016 EXTENDED	2017 MIDeal PRICE
		--------WARRANTY----------			
0	EW-NR-NA-2PL	PELICAN NP 2ND YEAR PARTS/LABOR	$3,500.00	$0.00	$ 3,535.00
0	EW-NR-NA-3PL	PELICAN NP 3RD YEAR PARTS/LABOR	$6,100.00	$0.00	$ 6,160.00
0	EW-NR-NA-4PL	PELCIAN NP 4TH YEAR PARTS/LABOR	$11,000.00	$0.00	$ 11,110.00
0	EW-NR-NA-5PL	PELICAN NP 5TH YEAR PARTS/LABOR	$15,500.00	$0.00	$ 15,660.00
		-------FREIGHT RATES-------			
0	FRT-104-001	SELF SHIPPING DOCK CHARGE	$595.00	$0.00	
0	FRT-104-002	FREIGHT-IL,WI,IA,IN,MI,MN,KY	$1,310.00	$0.00	
0	FRT-104-003	FREIGHT-TN,WV,PA,NY	$2,850.00	$0.00	
0	FRT-104-004	FREIGHT-NH,VT,ME	$3,555.00	$0.00	
0	FRT-104-005	FREIGHT-NEW YORK CITY	$4,110.00	$0.00	
0	FRT-104-006	FREIGHT-ND,SD,NE,OK,KS,AR,AL,MO	$2,715.00	$0.00	
0	FRT-104-007	FREIGHT-AZ,UT	$5,390.00	$0.00	
0	FRT-104-008	FREIGHT-CA,NV,ID,OR,WA	$6,355.00	$0.00	
0	FRT-104-009	FREIGHT- CHICAGO/MILWAUKEE	$900.00	$0.00	
0	FRT-104-010	FREIGHT-FL,LA,TX,NM,CO,WY,MT	$4,145.00	$0.00	
0	FRT-104-011	FREIGHT-OH,ST.LOUIS METRO	$1,530.00	$0.00	
0	FRT-104-012	FREIGHT,MS,GA,SC,NC,VA,MD	$3,130.00	$0.00	
0	FRT-104-013	FREIGHT - RI,DE,CT,NJ,MA	$2,740.00	$0.00	
0	FRT-104-014	FREIGHT - LAREDO, TX	$6,700.00	$0.00	
0	FRT-104-015	SPECIALIZED TRANSPORT EQUIPMENT	$1,030.00	$0.00	
			SUB TOTAL	**$0.00**	
		-----DISCOUNTS-----			
0	DISC-104-ADDL	DISCOUNT	$0.00	$0.00	

SPECIAL RFQ OPTIONS / OTHER DESCRIPTIONS

GRAND TOTAL	**$0.00**

MODEL: WHIRLWIND TIER 4F
EFFECTIVE DATE: 10/03/2016
SUPERCEDES ALL PREVIOUS PRICE LISTS
DEALER PRICE LIST (U.S. DOLLARS)

Purchase Order #	
Order Date:	
Delivery Date Requirment If Any:	

Ship To Address:
State Penalty Clause If Applicable:

QUANTITY	PART NUMBER	MODEL DESCRIPTION	2017 LIST PRICE	2017 EXTENDED
0	1121024	**WHIRLWIND MV DUAL 28" SIDEBROOM (M2)**	$163,500	$0.00
0	1121025	**WHIRLWIND MV SINGLE 28" SIDEBROOM (M2)**	$150,125	$0.00
0		Tier 4F emissions, 8 cu. yd. hopper, 28 in. (711 mm) trailing arm side broom on right-hand side (SINGLE) or both right and left hand sides (DUAL), ergonomic control console, sweeper is powder coated from powder coatings chart 2003/N with powder coated gray undercarriage and includes the standard features listed below.		
0	1121026	**WHIRLWIND MV DUAL 28" SIDEBROOM (AUTOCAR)**	$163,500	$0.00
0	1121027	**WHIRLWIND MV SINGLE 28" SIDEBROOM (AUTOCAR)**	$150,125	$0.00
0		Tier 4F emissions, 8 cu. yd. hopper, 28 in. (711 mm) trailing arm side broom on right-hand side (SINGLE) or both right and left hand sides (DUAL), ergonomic control console, sweeper is powder coated from powder coatings chart 2003/N with powder coated gray undercarriage and includes the standard features listed below.		
0	1121028	**WHIRLWIND MV DUAL 28" SIDEBROOM (IH)**	$163,500	$0.00
0	1121029	**WHIRLWIND MV SINGLE 28" SIDEBROOM (IH)**	$150,125	$0.00
0		Tier 4F emissions, 8 cu. yd. hopper, 28 in. (711 mm) trailing arm side broom on right-hand side (SINGLE) or both right and left hand sides (DUAL), ergonomic control console, sweeper is powder coated from powder coatings chart 2003/N with powder coated gray undercarriage and includes the standard features listed below.		
0	1121030	**WHIRLWIND MV DUAL 28" SIDEBROOM (PETERBILT)**	$163,500	$0.00
0	1121031	**WHIRLWIND MV SINGLE 28" SIDEBROOM (PETERBILT)**	$150,125	$0.00
0		Tier 4F emissions, 8 cu. yd. hopper, 28 in. (711 mm) trailing arm side broom on right-hand side (SINGLE) or both right and left hand sides (DUAL), ergonomic control console, sweeper is powder coated from powder coatings chart 2003/N with powder coated gray undercarriage and includes the standard features listed below.		
0	1121267	**WHIRLWIND MV DUAL 36" SIDEBROOM (M2)**	$163,500	$0.00
0	1121016	**WHIRLWIND MV SINGLE 36" SIDEBROOM (M2)**	$150,125	$0.00
0		Tier 4F emissions, 8 cu. yd. hopper, 36 in. (711 mm) trailing arm side broom on right-hand side (SINGLE) or both right and left hand sides (DUAL), ergonomic control console, sweeper is powder coated from powder coatings chart 2003/N with powder coated gray undercarriage and includes the standard features listed below.		
0	1121017	**WHIRLWIND MV DUAL 36" SIDEBROOM (AUTOCAR)**	$163,500	$0.00
0	1121018	**WHIRLWIND MV SINGLE 36" SIDEBROOM (AUTOCAR)**	$150,125	$0.00
		Tier 4F emissions, 8 cu. yd. hopper, 36 in. (711 mm) trailing arm side broom on right-hand side (SINGLE) or both right and left hand sides (DUAL), ergonomic control console, sweeper is powder coated from powder coatings chart 2003/N with powder coated gray undercarriage and includes the standard features listed below.		
0	1121020	**WHIRLWIND MV DUAL 36" SIDEBROOM (IH)**	$163,500	$0.00
0	1121021	**WHIRLWIND MV SINGLE 36" SIDEBROOM (IH)**	$150,125	$0.00
		Tier 4F emissions, 8 cu. yd. hopper, 36 in. (711 mm) trailing arm side broom on right-hand side (SINGLE) or both right and left hand sides (DUAL), ergonomic control console, sweeper is powder coated from powder coatings chart 2003/N with powder coated gray undercarriage and includes the standard features listed below.		
0	1121022	**WHIRLWIND MV DUAL 36" SIDEBROOM (PETERBILT)**	$163,500	$0.00
0	1121023	**WHIRLWIND MV SINGLE 36" SIDEBROOM (PETERBILT)**	$150,125	$0.00
		Tier 4F emissions, 8 cu. yd. hopper, 36 in. (711 mm) trailing arm side broom on right-hand side (SINGLE) or both right and left hand sides (DUAL), ergonomic control console, sweeper is powder coated from powder coatings chart 2003/N with powder coated gray undercarriage and includes the standard features listed below.		
0	SPECIAL	**WHIRLWIND MV DUAL 28" SIDEBROOM 10 YD HOPPER**	Consult Factory	$0.00
0		Tier 4F emissions, 10 cu. yard hopper, 28 in. (711 mm) trailing arm side brooms on both right and left hand sides, ergonomic control console, sweeper is powder coated from powder coatings chart 2003/N with powder coated gray undercarriage and includes the standard features listed below.		
0	SPECIAL	**WHIRLWIND MV DUAL 36" SIDEBROOM 10 YD HOPPER**	Consult Factory	$0.00
0		Tier 4F emissions, 10 cu. yard hopper, 36 in. (711 mm) trailing arm side brooms on both right and left hand sides, ergonomic control console, sweeper is powder coated from powder coatings chart 2003/N with powder coated gray undercarriage and includes the standard features listed below.		

MODEL: WHIRLWIND TIER 4F
EFFECTIVE DATE: 10/03/2016
SUPERCEDES ALL PREVIOUS PRICE LISTS
DEALER PRICE LIST (U.S. DOLLARS)

QUANTITY	PART NUMBER	MODEL DESCRIPTION	2017 LIST PRICE	2017 EXTENDED
		CHASSIS		
0	1122611	2017 AUTOCAR DUAL STEER (36" SB) (2013 EMMISIONS) (NON STOCKED)	Consult Factory	$0.00
0	SPECIAL	2017 AUTOCAR DUAL STEER (28" SB) (2013 EMMISIONS) (NON STOCKED)	Consult Factory	$0.00
0	SPECIAL	CANADIAN COMPLIANCE AND DAYTIME RUNNING LIGHTS FOR AUTOCAR CHASSIS	Consult Factory	Consult Factory
0	SPECIAL	2017 IH M7 (V8) DUAL STEER (36" SB) 2010 EMISSIONS (NO FRONT TOW HOOKS, SEATS ARE VINYL) LIMITED QTY	Consult Factory	$0.00

0	1121858	2017 M2 DUAL STEER (36" SB) (2013 EMISSIONS)	Consult Factory	Consult Factory
0	1122499	2017 PETERBILT RIGHT HAND STEER 28" SB	Consult Factory	$0.00
0	1122500	2017 PETERBILT DUAL STEER 28" SB	Consult Factory	$0.00
0	1122497	2017 PETERBILT RIGHT HAND STEER 36" SB	Consult Factory	$0.00
0	1122498	2017 PETERBILT DUAL STEER 36" SB	Consult Factory	$0.00

*****A 10 yard hopper requires a Chassis with extended wheelbase to accommodate larger hopper. Consult factory for further details*****

*****For International or Freightliner M2 with 28" sidebrooms; Chassis mounitng/altreations is a special, please consult inside sales for an RFQ.**

******FOR A SKID MOUNT UNIT, PLEASE CONSULT FACTORY FOR FUTHER DETAILS*****

CHASSIS MOUNTING CHARGE

0	1122439	M2 172" WB (36" DUAL SIDEBROOMS)	$2,135.00	$0.00
0	SPECIAL	M2 172" WB (36" SINGLE SIDEBROOM)	$2,135.00	$0.00
0	1122573	AUTOCAR XPERT 164" WB (36" DUAL SIDEBROOMS)	$2,135.00	$0.00
0	SPECIAL	AUTOCAR XPERT 164" WB (36" SINGLE SIDEBROOM)	$2,135.00	$0.00
0	SPECIAL	AUTOCAR XPERT 144" WB (28" DUAL SIDEBROOMS) *SPECIAL ORDER*	$2,135.00	$0.00
0	SPECIAL	AUTOCAR XPERT 144" WB (28" SINGLE SIDEBROOM) *SPECIAL ORDER*	$2,135.00	$0.00
0	SPECIAL	IH M7 (V8) 177" WB (36" DUAL SIDEBROOMS)	$2,135.00	$0.00
0	SPECIAL	IH M7 (V8) 177" WB (36" SINGLE SIDEBROOM)	$2,135.00	$0.00
0	1122579	PETERBILT 36" SIDEBROOMS	$2,135.00	$0.00
0	1122551	PETERBILT 28" SIDEBROOMS	$2,135.00	$0.00
0	SPECIAL	CUSTOMER SUPPLIED HANDLING CHARGE	$2,845.00	$0.00
0	SPECIAL	CUSTOMER SUPPLIED CHASSIS ALTERATIONS	CONTACT INSIDE SALES	$0.00

NOTE: Customer Supplied Chassis requires both the Chassis Alterations and the Handling Charge

1	4820001	PAINT CAB STANDARD WHITE	N/C	$0.00
1	4810001	PAINT SWEEPER STANDARD WHITE	N/C	$0.00
0	SPECIAL	SWEEPER COLOR OTHER THAN STANDARD WHITE	SEE INSIDE SALES	$0.00

1 NOTE: A BODY includes the cost of Elgin standard white finish paint. It does not however, include the price of the chassis.
1 NOTE: The chassis being supplied by a customer or dealer must comply completely with all Elgin requirements or the chassis will be modified at dealer's expense.
1 NOTE: For cost of sweeper mounted on any other chassis, consult factory.
1 NOTE: One year warranty on all Elgin supplied parts and labor. Consult your Elgin dealer for full warranty details.

STANDARD FEATURES

Auxiliary Engine:
- John Deere 4045T, 4 cylinder Turbocharged diesel
- Alternator, 120 amp.
- Horsepower: 74 HP (55 kW) at 2400 RPM
- Displacement: 276 cu. in. (4.5 L)

Auto Shutdown Auxiliary Engine
Backup alarm, electric
Camera, Rear View
Debris Hopper Volumetric Capacity 8.0 yd3 (6.0 m3)
Drive: Fluid coupler and 5-groove banded power beltwith adjustable idler pulley
Doors, fiberglass access doors provide easy service and maintenance on auxiliary engine, hydraulic and electrical system
Electronic Throttle
Fuel tank, 50 gallon (189 L)
Fuel water separator for auxiliary engine
Full Load Indicator Weight actuated with in-cab warning light
Hose, hydrant fill, 16208" (5080 mm) with coupling
Hopper rear door, hydraulically opened/closed and locked/unlocked with external controls
Hydraulic oil cooler
In cab hopper dump
Individual water switches
LED clearance lights
Manuals, operator and parts
Memory Sweep : Sweep resume feature
Rocker switches in central console gauges:
- Tachometer, hour meter, oil pressure,
- fuel, voltmeter, coolant temperature,
- spray water level gauge, hopper up,
- hopper rear door open, full load indicator

Sidebroom work lights
Spray Nozzles (Quick Disconnect Type) :
- (7) inside each suction nozzle
- (4) at extension broom
- (3) at each side broom (36" broom)

Water Tank Construction :
- Dual polyethylene, removable

Water System Capacity 335 gal. (1268 L)

MODEL: WHIRLWIND TIER 4F
EFFECTIVE DATE: 10/03/2016
SUPERCEDES ALL PREVIOUS PRICE LISTS
DEALER PRICE LIST (U.S. DOLLARS)

QUANTITY	PART NUMBER	MODEL DESCRIPTION	2017 LIST PRICE	2017 EXTENDED
		----------ALARM---------		
0	1048703	BACKUP ALARM - SMART	$420.00	$0.00
0	1122644	BACK UP ALARM - PRECO	$270.00	$0.00
		---------AUTO LUBE--------		
0	1121851	AUTO LUBE - SWEEPER ONLY	$5,885.00	$0.00
		------AUX ENGINE----------		
0	1120793	TURBO II PRECLEANER	$490.00	$0.00
0	1121842	SY-KLONE AUXILIARY PRECLEANER	$600.00	$0.00
0	1078204	AUXILIARY AIR FILTER RESTRICTION INDICATOR LIGHT	$630.00	$0.00
0	1121730	COLD WEATHER STARTING KIT	$480.00	$0.00
0	1121729	BLOCK HEATER	$445.00	$0.00
0	6063004	ADDITIONAL IGNITION KEY	$45.00	$0.00
0	1120393	AUXILIARY HYDRAULIC PUMP W/ IN-CAB DUMP	$1,365.00	$0.00
0	1121823	IDLE DOWN/NO WATER - SINGLE SIDEBROOM	$600.00	$0.00
0	1121824	IDLE DOWN/NO WATER - DUAL SIDEBROOMS	$600.00	$0.00
		----------DECALS---------		

1	1090208	RED LOGO-WHIRLWIND	$0.00	$0.00
0	1090209	WHITE LOGO-WHIRLWIND	$0.00	$0.00
0	1122929	SHIP DECALS AND SWOOSH LOOSE IN HOPPER	$0.00	$0.00

-----MANUALS-----

0	0701675	WHIRLWIND MV-3000 OPERATORS	$55.00	$0.00
0	0702247	WHIRLWIND MV-3000 PARTS	$100.00	$0.00
0	0702448	WHIRLWIND MV-3000 SERVICE	$95.00	$0.00
0	0704046	JOHN DEERE OPERATORS	$55.00	$0.00
0	0704047	JOHN DEERE PARTS	$100.00	$0.00
0	0704048	JOHN DEERE SERVICE	$190.00	$0.00

------PM10 COMPLIANT------

0	1121807	PM-10 (USE W/DUAL 36" SIDEBROOMS)	$2,990.00	$0.00
0	1121916	PM-10 (USE W/SINGLE 36" SIDEBROOMS)	$2,990.00	$0.00
0	1121917	PM-10 (USE W/DUAL 28" SIDEBROOMS)	$2,990.00	$0.00
0	1121918	PM-10 (USE W/SINGLE 28" SIDEBROOMS)	$2,990.00	$0.00

----------SAFETY----------

0	1048643	SLOW MOVING VEHICLE SIGN	$155.00	$0.00
0	1121725	UTILITY COVER LIFTER - RIGHT HAND	$2,625.00	$0.00
0	1122071	REMOVE REAR CAMERA	$0.00	$0.00
0	1096442	CAMERA RIGHT HAND SIDE	$720.00	$0.00
0	1095548	CAMERA LEFT HAND SIDE	$585.00	$0.00
0	1117174	CAMERA (2) FRONT (1) REAR	$995.00	$0.00

----SIDEBROOM OPTIONS----

0	1036814	ALUMINUM SIDEBROOM SEGMENTS (ILO STD EACH)	$410.00	$0.00
0	1121517	VARIABLE SPEED DUAL SIDEBROOMS	$1,265.00	$0.00
0	1121518	VARIABLE SPEED SINGLE SIDEBROOM **(NOT COMPATIBLE WITH DUAL SIDEBROOMS)**	$665.00	$0.00
0	1111175	SIDEBROOM TILT LEFT HAND W/DISPLAY 36"	$1,015.00	$0.00
0	1111176	SIDEBROOM TILT RIGHT HAND W/DISPLAY 36"	$1,015.00	$0.00
0	1121676	SIDEBROOM TILT LEFT HAND 28"	$925.00	$0.00
0	1121677	SIDEBROOM TILT RIGHT HAND 28"	$925.00	$0.00

-------SWEEPER OPTIONS----

0	1067561	NOZZLE 3RD CASTER WHEEL - SINGLE	$405.00	$0.00
0	1067562	NOZZLE 3RD CASTER WHEEL - DUAL	$760.00	$0.00
0	1121301	AIR PURGE	$415.00	$0.00
0	1120044	AUTO SHUTTER LEFT HAND	$1,250.00	$0.00
0	1120045	AUTO SHUTTER RIGHT HAND	$1,250.00	$0.00
0	1120104	AUTO SHUTTER DUAL	$1,385.00	$0.00

MODEL: WHIRLWIND TIER 4F
EFFECTIVE DATE: 10/03/2016
SUPERCEDES ALL PREVIOUS PRICE LISTS
DEALER PRICE LIST (U.S. DOLLARS)

QUANTITY	PART NUMBER	MODEL DESCRIPTION	2017 LIST PRICE	2017 EXTENDED

----------8 YARD HOPPER----------

0	1071234	STAINLESS STEEL HOPPER SCREEN	$1,545.00	$0.00
0	1085864	RIGHT HAND INSPECTION DOOR	$435.00	$0.00
0	1085882	LEFT HAND INSPECTION DOOR	$435.00	$0.00
0	1085883	RIGHT HAND INSPECTION DOOR & STEP	$775.00	$0.00
0	1085886	LEFT HAND INSPECTION DOOR & STEP	$775.00	$0.00
0	1085887	6" HOPPER DRAIN	$810.00	$0.00
0	1088305	STAINLESS STEEL LINED HOPPER (USE W/NO INSPECTION DOOR, NO DRAIN)	$7,810.00	$0.00
0	1088311	STAINLESS STEEL LINED HOPPER (USE W/RH INSPECTION DOOR, NO DRAIN)	$7,810.00	$0.00
0	1088315	STAINLESS STEEL LINED HOPPER (USE W/RH INSPECTION DOOR, 6" DRAIN)	$8,045.00	$0.00
0	1089326	6" HOPPER DRAIN STAINLESS STEEL DOOR	$1,735.00	$0.00
0	1092627	LIFELINER HOPPER SYSTEM W/WARRANTY	$7,895.00	$0.00
0	1101937	STAINLESS STEEL RIGHT HAND INSPECTION DOOR & STEP	$795.00	$0.00
0	1101938	STAINLESS STEEL LEFT HAND INSPECTION DOOR & STEP	$795.00	$0.00

----------10 YARD HOPPER----------

0	1071234	STAINLESS STEEL HOPPER SCREEN	$1,545.00	$0.00
0	1085864	RIGHT HAND INSPECTION DOOR	$435.00	$0.00
0	1085882	LEFT HAND INSPECTION DOOR	$435.00	$0.00
0	1085883	RIGHT HAND INSPECTION DOOR & STEP	$775.00	$0.00
0	1085886	LEFT HAND INSPECTION DOOR & STEP	$775.00	$0.00
0	1085887	6" HOPPER DRAIN	$810.00	$0.00
0	1089284	STAINLESS STEEL LINED HOPPER (USE W/NO INSPECTION DOOR, NO DRAIN)	$7,810.00	$0.00
0	1089286	STAINLESS STEEL LINED HOPPER (USE W/RH INSPECTION DOOR, NO DRAIN)	$7,810.00	$0.00
0	1089290	STAINLESS STEEL LINED HOPPER (USE W/RH INSPECTION DOOR, 6" DRAIN)	$7,810.00	$0.00
0	1089326	6" HOPPER DRAIN SS DOOR	$1,735.00	$0.00
0	SPECIAL	LIFELINER HOPPER SYSTEM W/WARRANTY	$9,615.00	$0.00

----------LIGHTS---------

0	1121132	WIRE/MOUNT HOPPER/REAR	$410.00	$0.00
0	1121133	WIRE/MOUNT HOPPER/REAR W/GUARD	$640.00	$0.00

0	1120559	WIRE/MOUNT (2) HOPPER/REAR W/LED ARROWBOARD (USE W/WANDERING HOSE)	$3,540.00	$0.00
0	1120560	WIRE/MOUNT (2) HOPPER/REAR W/LED ARROWBOARD (USE W/OUT WANDERING HOSE)	$3,540.00	$0.00
0	1121740	WIRE/MOUNT (2) REAR HOPPER (USE W/WANDERING HOSE)	$955.00	$0.00
0	1121741	WIRE/MOUNT (2) REAR HOPPER (USE W/OUT WANDERING HOSE)	$955.00	$0.00
0	1121500	REAR ARROWBOARD LED	$2,640.00	$0.00
0	1121121	HOPPER/REAR LED BEACON / LED ARROWBOARD	$2,950.00	$0.00
0	1121502	WIRE/MOUNT HOPPER/REAR & GUARD WITH LED ARROWBOARD	$3,060.00	$0.00
0	1120887	REAR LED BEACON	$930.00	$0.00
0	1121096	REAR LED BEACON WITH ARROWSTICK	$2,815.00	$0.00
0	1121098	RIGHT & LEFT HOPPER/REAR LED BEACONS (USE W/WANDERING HOSE)	$1,435.00	$0.00
0	1121099	RIGHT & LEFT HOPPER/REAR LED BEACONS (USE W/O WANDERING HOSE)	$1,435.00	$0.00
0	1121813	(4) ALTERNATING FLASHING REAR LED LIGHTS	$1,810.00	$0.00
0	1121752	(2) REAR BUMPER STROBES	$1,100.00	$0.00
0	1121812	(2) ALTERNATING FLASHING LIGHTS, REAR LED LIGHTS	$900.00	$0.00
0	1120427	DUAL REAR LED FLOOD LIGHTS	$615.00	$0.00
0	1120428	SINGLE REAR LED FLOOD LIGHT	$375.00	$0.00
0	1121512	REAR LED ARROWSTICK	$2,260.00	$0.00
0	1120440	(2) HOPPER/REAR BEACONS WITH LED ARROWBOARD (USE W/WANDERING HOSE)	$3,460.00	$0.00
0	1120441	(2) HOPPER/REAR BEACONS WITH LED ARROWBOARD (USE W/O WANDERING HOSE)	$3,460.00	$0.00
0	1120425	LED SIDEBROOM LIGHTS (ILO STANDARD)	$480.00	$0.00
0	1120426	LED RIGHT HAND SIDEBROOM LIGHT	$245.00	$0.00
0	1120429	LED SIDEBROOMS & REAR LED FLOOD LIGHTS	$1,095.00	$0.00
0	1120430	LED SIDEBROOM & REAR RIGHT HAND LED FLOOD LIGHT	$855.00	$0.00

MODEL: WHIRLWIND TIER 4F
EFFECTIVE DATE: 10/03/2016
SUPERCEDES ALL PREVIOUS PRICE LISTS
DEALER PRICE LIST (U.S. DOLLARS)

QUANTITY	PART NUMBER	MODEL DESCRIPTION	2017 LIST PRICE	2017 EXTENDED
		----------PAINT----------		
0	4811018	PAINT SWEEPER ZINC YELLOW RAL 1018	$515.00	$0.00
0	4811023	PAINT SWEEPER TRAFFIC YELLOW RAL 1023	$515.00	$0.00
0	4811037	PAINT SWEEPER SUN YELLOW RAL 1037	$515.00	$0.00
0	4813020	PAINT SWEEPER TRAFFIC RED RAL 3020	$515.00	$0.00
0	SPECIAL	PAINT SWEEPER ANY OTHER RAL COLOR	$1,265.00	$0.00
0	SPECIAL	PAINT SWEEPER NON RAL COLOR	$3,830.00	$0.00
		------TOOL BOX/TOOL KIT---		
0	1053426	TOOL KIT	$745.00	$0.00
0	1057687	TOOL BOX W/TOOLS	$720.00	$0.00
		-----WANDERING HOSE-----		
0	1059263	4 FT. ALUMINUM WANDERING HOSE EXTENSION - REAR MOUNT	$760.00	$0.00
0	1063656	(2) 4 FT. ALUMINUM WANDERING HOSE EXTENSIONS - REAR MOUNT	$1,535.00	$0.00
0	1082041	WANDERING HOSE LIGHT DUTY SPRING ASSISTANCE **(8 YD ONLY)**	$3,400.00	$0.00
0	1121789	HYDRAULIC WANDERING HOSE - (USE W/DUAL SIDEBROOMS) **(8 YD ONLY)**	$4,750.00	$0.00
0	1121790	HYDRAULIC WANDERING HOSE - (USE W/SINGLE SIDEBROOM) **(8 YD ONLY)**	$4,750.00	$0.00
0	1121791	HYDRAULIC WANDERING HOSE (USE W/SINGLE SB & FRONT SPRAYBAR) **(8 YD ONLY)**	$4,750.00	$0.00
0	1121792	HYDRAULIC WANDERING HOSE (USE W/DUAL SB & VARIABLE SPEED) **(8 YD ONLY)**	$4,750.00	$0.00
0	1121793	HYDRAULIC WANDERING HOSE (USE SINGLE SB & VARIABLE SPEED) **(8 YD ONLY)**	$4,750.00	$0.00
0	1121794	HYDRAULIC WANDERING HOSE (USE W/SINGLE SB, VARIABLE SPEED & FRONT SPRAYBAR) **(8 YD ONLY)**	$4,750.00	$0.00
		------WATER SYSTEM--------		
0	1032484	25' WATER FILL HOSE (ILO 16' 8")	$195.00	$0.00
0	1036150	HYDRANT WRENCH	$90.00	$0.00
0	1040094	QUICK DISCONNECT WATER FILL	$510.00	$0.00
0	1059209	HOPPER DELUGE	$1,020.00	$0.00
0	1121913	LOW PRESSURE WASHDOWN	$1,220.00	$0.00
0	1121910	HIGH PRESSURE WASHDOWN - HIGH PSI AT LOW RPM	$3,975.00	$0.00
0	1121911	HIGH PRESSURE WASHDOWN (USE W/ PM10) - HIGH PSI AT LOW RPM	$3,975.00	$0.00
0	1121912	HIGH PRESSURE WASHDOWN (USE WITH WAND HOSE) - HIGH PSI AT LOW RPM	$3,975.00	$0.00
0	1120481	HIGH PRESSURE WASHDOWN (USE W/ WANDERING HOSE AND PM10) HIGH PSI AT LOW RPM	$3,975.00	$0.00
0	1091366	HIGH PRESSURE WASHDOWN HOSE REEL	$1,145.00	$0.00
0	1091367	HIGH PRESSURE WASHDOWN HOSE REEL (USE W/ RIGHT HAND INSPECTION DOOR)	$1,145.00	$0.00

MODEL: WHIRLWIND TIER 4F
EFFECTIVE DATE: 10/03/2016
SUPERCEDES ALL PREVIOUS PRICE LISTS
DEALER PRICE LIST (U.S. DOLLARS)

QUANTITY	PART NUMBER	MODEL DESCRIPTION	2017 LIST PRICE	2017 EXTENDED
		----M2 CHASSIS OPTIONS----		
0	0704005	M2 PARTS BOOK	$410.00	$0.00
0	0704006	M2 OPERATOR BOOK	$55.00	$0.00
0	0704007	M2 SERVICE MANUAL	$335.00	$0.00
0	1063734	CAB PAINT M2	$3,815.00	$0.00
0	1070639	LED/STOP/TAIL/REAR TURN LIGHTS	$625.00	$0.00
0	1075400	AM/FM RADIO WITH CD	$900.00	$0.00
0	1109607	12" CONVEX MIRRORS (IL0 8")	$320.00	$0.00
0	1080756	FENDER MOUNTED MIRROR-LEFT HAND	$510.00	$0.00
0	1081188	EXTRA KEY	$45.00	$0.00
0	1081745	(2) BOSTROM 905 VINYL MIDBACK	$1,835.00	$0.00
0	1081746	(1) BOSTROM 905 VINYL MIDBACK	$900.00	$0.00
0	1081747	(2) BOSTROM 905 CLOTH HI-BACK	$2,030.00	$0.00
0	1081748	BOSTROM 905 CLOTH HI-BACK	$1,045.00	$0.00
0	1081901	SPARE TIRE & WHEEL, BALANCE	$1,255.00	$0.00
0	1081909	SINGLE ARM REST - VINYL **(ONLY W/AIR RIDE SEATS)**	$365.00	$0.00
0	1081910	DUAL ARM REST - VINYL **(ONLY W/AIR RIDE SEATS)**	$690.00	$0.00
0	1081911	SINGLE ARM REST - CLOTH **(ONLY W/AIR RIDE SEATS)**	$365.00	$0.00
0	1081912	DUAL ARM REST - CLOTH **(ONLY W/AIR RIDE SEATS)**	$690.00	$0.00
0	1082931	AIR FILTER RESTRICTION INDICATOR	$980.00	$0.00
0	1121758	FRONT SPRAY BAR-SINGLE	$1,015.00	$0.00
0	1121759	FRONT SPRAY BAR-DUAL	$740.00	$0.00
0	1090653	DUAL AIR HORNS	$1,580.00	$0.00
0	1122080	AUTO LUBE SWEEPER/TRUCK	$7,350.00	$0.00
0	1092336	(2) ALUMINUM EXTENSIONS FRONT MOUNTED	$1,345.00	$0.00
0	1121162	WIRE/MOUNT CAB/FRONT ; HOPPER/REAR	$955.00	$0.00
0	1121492	WIRE/MOUNT - CAB/FRONT ; HOPPER/REAR W/GUARD (USE W/AIR HORN)	$1,050.00	$0.00
0	1121163	WIRE/MOUNT - CAB/FRONT ; HOPPER/REAR W/GUARD	$1,415.00	$0.00
0	1121164	LED BEACON CAB/FRONT ; HOPPER/REAR	$2,325.00	$0.00
0	1121494	LED BEACON CAB/FRONT ; HOPPER/REAR (USE W/AIR HORN)	$2,325.00	$0.00
0	1118356	2 1/2 LB. FIRE EXTINGUISHER	$215.00	$0.00
0	1118357	5 LB. FIRE EXTINGUISHER	$230.00	$0.00
0	1121926	FRONT SPRAY BAR (USE W/PM10)	$740.00	$0.00
0	1121736	CAB & (2) REAR BEACONS (USE W/ WANDERING HOSE)	$2,035.00	$0.00
0	1121737	CAB & (2) REAR BEACONS (USE W/WANDERING HOSE & AIR HORN)	$2,035.00	$0.00
0	1121738	CAB & (2) REAR BEACONS (USE W/O WANDERING HOSE)	$2,035.00	$0.00
0	1121739	CAB & (2) REAR BEACONS (USE W/O WANDERING HOSE & AIR HORN)	$2,035.00	$0.00
0	1121901	WIRE/MOUNT - CAB/FRONT ; HOPPER/REAR W/ LED ARROWBOARD	$2,710.00	$0.00
0	1121902	WIRE/MOUNT-CAB/FRONT;HOPPER/REAR W/ LED ARROWBOARD (USE W/AIR HORN)	$2,710.00	$0.00
0	1121903	LED BEACONS CAB/FRONT ; HOPPER/REAR W/ LED ARROWBOARD	$3,870.00	$0.00
0	1121904	LED BEACONS CAB/FRONT ; HOPPER/REAR W/ LED ARROWBOARD (USE W/AIR HORN)	$3,870.00	$0.00
0	SPECIAL	BATTERY DISCONNECT	$525.00	$0.00
		----PETERBILT CHASSIS OPTIONS----		
0	1121577	SPARE CHASSIS KEY	$115.00	$0.00
0	1121762	FRONT SPRAYBAR (USE W/SINGLE SIDEBROOM)	$1,015.00	$0.00
0	1121763	FRONT SPRAYBAR (USE W/DUAL SIDEBROOMS)	$740.00	$0.00
0	1122901	FRONT SPRAYBAR (USE W/PM-10)	$740.00	$0.00
0	1122155	LED STOP, TAIL, TURN LIGHTS	$625.00	$0.00
0	1123158	2 1/2 LB. FIRE EXTINGUISHER	$215.00	$0.00
0	1123159	5 LB. FIRE EXTINGUISHER	$245.00	$0.00

MODEL: WHIRLWIND TIER 4F
EFFECTIVE DATE: 10/03/2016
SUPERCEDES ALL PREVIOUS PRICE LISTS
DEALER PRICE LIST (U.S. DOLLARS)

QUANTITY	PART NUMBER	MODEL DESCRIPTION	2017 LIST PRICE	2017 EXTENDED
		---- INTERNATIONAL CHASSIS OPTIONS----		
0	1117228	2 1/2 LB. FIRE EXTINGUISHER	$215.00	$0.00
0	1117229	5 LB. FIRE EXTINGUISHER	$240.00	$0.00
0	1063731	CAB PAINT	$3,675.00	$0.00
0	1097476	AIR RESTRICTOR GAUGE	$980.00	$0.00
0	1070639	LED/STOP/TAIL/REAR TURN LIGHTS	$625.00	$0.00
0	1121758	FRONT SPRAY BAR-SINGLE	$1,015.00	$0.00
0	1121759	FRONT SPRAY BAR-DUAL	$740.00	$0.00
0	1086733	LEFT HAND FENDER MOUNTED MIRROR	$510.00	$0.00
0	1121896	WIRE/MOUNT - CAB/FRONT ; HOPPER/REAR	$955.00	$0.00
0	1121897	LED BEACONS CAB/FRONT ; HOPPER/REAR	$1,875.00	$0.00
0	1121926	FRONT SPRAY BAR (USE W/ PM-10)	$740.00	$0.00
0	1091761	EXTRA KEY	$60.00	$0.00
0	1091770	(2) ELECTRIC & (1) AIR HORN	$1,890.00	$0.00
0	1121177	BEACON CAB/FRONT;(2) HOPPER/REAR LED BEACONS (USE W/ WANDERING HOSE)	$2,615.00	$0.00
0	1121178	BEACON CAB/FRONT;(2) HOPPER/REAR LED BEACONS (USE W/O WANDERING HOSE)	$2,615.00	$0.00
0	1091822	RADIO AM/FM/CD	$900.00	$0.00
0	1092464	4 FT. ALUMINUM WANDERING HOSE EXTENSION - FRONT MOUNT	$945.00	$0.00
0	1092465	(2) 4 FT. ALUMINUM WANDERING HOSE EXTENSION - FRONT MOUNT	$1,345.00	$0.00
0	1097641	NATIONAL AIR RIDE SEAT - PASSENGER SIDE (RIGHT HAND) VINYL	$2,350.00	$0.00
0	1097642	NATIONAL AIR RIDE SEAT- PASSENGER SIDE (RIGHT HAND) VINYL W/ARM REST	$2,505.00	$0.00
0	1097643	NATIONAL AIR RIDE SEAT- PASSENGER SIDE (RIGHT HAND) CLOTH	$2,225.00	$0.00
0	1097644	NATIONAL AIR RIDE SEAT- PASSENGER SIDE	$2,365.00	$0.00
0	1097645	NATIONAL AIR RIDE SEAT - DRIVER SIDE (LEFT HAND) VINYL	$2,085.00	$0.00
0	1097646	NATIONAL AIR RIDE SEAT - DRIVER SIDE (LEFT HAND) VINYL W/ARM REST	$2,225.00	$0.00
0	1097647	NATIONAL AIR RIDE SEAT - DRIVER SIDE (LEFT HAND) CLOTH	$2,225.00	$0.00
0	1097648	NATIONAL AIR RIDE SEAT - DRIVER SIDE (LEFT HAND) CLOTH W/ARM REST	$2,550.00	$0.00
0	1099317	(1) ELECTRIC HORN	$290.00	$0.00
0	1121891	WIRE/MOUNT CAB/FRONT ; HOPPER/REAR WITH LED ARROWBOARD	$2,710.00	$0.00
0	1121892	LED BEACON CAB/FRONT ; HOPPER/REAR WITH LED ARROWBOARD	$3,870.00	$0.00
		----AUTOCAR XPERT CHASSIS OPTIONS----		
0	1111468	LED/STOP/TAIL/REAR TURN LIGHTS	$625.00	$0.00
0	1107216	RAIN CAP EXHAUST	$385.00	$0.00
0	1107220	2 BATTERIES, 31 ECL, 12V, 1900CCA	$650.00	$0.00
0	1107230	AUTO AIR DRAIN VALVE	$850.00	$0.00
0	1107232	BATTERY DISCONNECT	$1,580.00	$0.00
0	1107236	DUAL UNDERCAB AIR HORN	$1,340.00	$0.00
0	1107238	RIGHT HAND AIR RIDE ISRINGHAUSEN HT914 HIGH BACK	$2,100.00	$0.00
0	1107239	LEFT HAND AIR RIDE ISRINGHAUSEN HT914 HIGH BACK	$2,100.00	$0.00
0	1107243	IN CAB AIR FILTER RESTRICTION INDICATOR	$545.00	$0.00
0	1107244	DAYTIME RUNNING LIGHTS FOR US ONLY	$530.00	$0.00
0	1107245	PAINT OUTSIDE CAB	$6,045.00	$0.00
0	1107247	PAINT WHEEL RIMS	$1,180.00	$0.00
0	1121172	BEACON CAB/FRONT ; (2) HOPPER/REAR BEACONS (USE W/ANDERING HOSE)	$2,615.00	$0.00
0	1121173	BEACON CAB/FRONT ; (2) HOPPER/REAR BEACONS (USE W/O WANDERING HOSE)	$2,615.00	$0.00
0	1121206	WIRE / MOUNT CAB/FRONT ; HOPPER/REAR	$955.00	$0.00
0	1121207	WIRE / MOUNT CAB/FRONT ; HOPPER/REAR W/GUARD	$1,415.00	$0.00
0	1121208	LED STROBES CAB/FRONT ; HOPPER/REAR	$2,325.00	$0.00
0	1121894	LED BEACONS CAB/FRONT ; HOPPER REAR WITH LED ARROWSTICK	$3,425.00	$0.00
0	1107536	4 FT. ALUMINUM WANDERING HOSE EXTENSION - FRONT MOUNT	$745.00	$0.00
0	1121210	WIRE MOUNT CAB/REAR W/ LED ARROWBOARD	$3,435.00	$0.00
0	1121211	LED STROBE CAB/REAR W/ LED ARROWBOARD	$3,605.00	$0.00
0	1121760	FRONT SPRAY BAR (USE W/SINGLE SIDEBROOM)	$1,015.00	$0.00
0	1121761	FRONT SPRAY BAR (USE W/DUAL SIDEBROOMS)	$740.00	$0.00
0	1122902	FRONT SPRAY BAR (USE W/PM-10)	$1,015.00	$0.00
0	1122050	AUTO LUBE SWEEPER/TRUCK	$7,350.00	$0.00
0	1107546	17" WORK PLATFORM	$3,250.00	$0.00
0	1108945	AM/FM RADIO WITH CD	$900.00	$0.00
0	SPECIAL	EXTRA KEY	$120.00	$0.00
0	SPECIAL	SPARE TIRE / WHEEL	$1,330.00	$0.00
0	1120374	2 1/2 LB. FIRE EXTINGUISHER	$215.00	$0.00
0	1120375	5 LB. FIRE EXTINGUISHER	$245.00	$0.00

MODEL: WHIRLWIND TIER 4F
EFFECTIVE DATE: 10/03/2016
SUPERCEDES ALL PREVIOUS PRICE LISTS

DEALER PRICE LIST (U.S. DOLLARS)

QUANTITY	PART NUMBER	MODEL DESCRIPTION	2017 LIST PRICE	2017 EXTENDED
		-------FREIGHT RATES-------		
0	FRT-120-001	SELF SHIPPING DOCK CHARGE	$595.00	$0.00
0	FRT-120-002	FREIGHT-IL,WI,IA,IN,MI,MN,KY	$1,310.00	$0.00
0	FRT-120-003	FREIGHT-TN,WV,PA,NY	$2,850.00	$0.00
0	FRT-120-004	FREIGHT-NH,VT,ME	$3,555.00	$0.00
0	FRT-120-005	FREIGHT-NEW YORK CITY	$4,110.00	$0.00
0	FRT-120-006	FREIGHT-ND,SD,NE,OK,KS,AR,AL,MO	$2,715.00	$0.00
0	FRT-120-007	FREIGHT-AZ,UT	$5,390.00	$0.00
0	FRT-120-008	FREIGHT-CA,NV,ID,OR,WA	$6,355.00	$0.00
0	FRT-120-009	FREIGHT- CHICAGO/MILWAUKEE	$900.00	$0.00
0	FRT-120-010	FREIGHT-FL,LA,TX,NM,CO,WY,MT	$4,145.00	$0.00
0	FRT-120-011	FREIGHT-OH,ST.LOUIS METRO	$1,530.00	$0.00
0	FRT-120-012	FREIGHT,MS,GA,SC,NC,VA,MD	$3,130.00	$0.00
0	FRT-120-013	FREIGHT - RI,DE,CT,NJ,MA	$2,740.00	$0.00
0	FRT-120-014	FREIGHT - LAREDO, TX	$6,700.00	$0.00
0	FRT-120-015	SPECIALIZED TRANSPORT EQUIPMENT	$1,030.00	$0.00
		----------WARRANTY--------		
0	EW-AIR-NA-2PL	WHIRLWIND 2ND YEAR PARTS/LABOR	$2,630.00	$0.00
0	EW-AIR-NA-3PL	WHIRLWIND 3RD YEAR PARTS/LABOR	$4,000.00	$0.00
0	EW-AIR-NA-4PL	WHIRLWIND 4TH YEAR PARTS/LABOR	$6,105.00	$0.00
0	EW-AIR-NA-5PL	WHIRLWIND 5TH YEAR PARTS/LABOR	$8,315.00	$0.00
			SUB TOTAL	**$0.00**
		-----DISCOUNTS-----		
0	DISC-120-ADDL	ADDITIONAL DISCOUNT	$0.00	$0.00
0	DISC-120-PROMO	PROMO DISCOUNT	$0.00	$0.00

SPECIAL RFQ OPTIONS / OTHER DESCRIPTIONS

GRAND TOTAL	**$0.00**

1/1/2016	**Spaulding Mfg., Inc. List Pricing**	
	Spaulding Asphalt Heater/reclaimer: Spaulding 1T tow behind	
	Model 1TRS-LRMV-1 ton hopper capacity trailer	$ 15,500.00
	6000 LB Axle, leaf spring suspension, 235/80/R16E tires and rims,	
	Electric brakes and brake away, pintle eye,	
	diesel or propane burner with automatice temperature control,	
	insulated air jacket hopper, insualted metal top loading doors,	
	rear single unloading door all manual operation, LED lighting	
	Model 2TRS-LRMV -2 ton hopper capacity trailer	$ 16,280.00
	6000 LB single axle,235/80/R16 Etires, electric brakes w brakeaway,	
	pintle eye, diesel or propane fired burner with automatic temperture	
	insulated air jacket hopper, insulated metal top loading doors	
	rear single unloading door all manual operation, LED lighting	
	Model 3TRS-LRMV-3 ton hopper capacity trailer	$ 19,550.00
	6000 LB tandem axles, 235/80/R16E tires,electric brakesw/ brakeaway	
	pintle eye, dieselor propane fired burner w/ automatic temperture control	
	insulated air jacket hopper, insulated metal top loading doors	
	rear single unloading door all manual operation, LED lighting	
	Model 4TRS- 4 ton hopper capacity trailer	$ 20,550.00
	7000LB axles, 235/80/R16E tires, electric brakesw/brakeaway	
	pintle eye, diesel or propane fired burner w/ automatic temperture control	
	insulated air jacket hooper, insulated metal top loading doors	
	rear single unloading door all manual operation, LED lighting	
	Model 6TRS-6 ton hopper capacity trailer	$ 46,250.00
	10,000LB axles, 235/75/R17.5tires and rims, electric brakes and brakeaway	
	diesel or propane burners dual, dump hopper with sizzor hoist, top loading	
	hydraulic doors,hydraulic rear unloading door, center duct work	
	top third burner option, pintle eye, LED lighting	
	Options for Spaulding Asphalt Heater/reclaimer	
	HEATING SYSTEMS	
SPPAT-propane,SPDAT - DIESEL	Propane burner system 150,000BTU each burner with automatic temperature control OR DIESEL BURNER 105,000btu	$ 780.00
SP110VOLT	110V electric overnight heat with ground fault protection and safety disconnect	$ 2,141.00
SP220VOLT	220V electric overnight heat with ground fault protection and safety disconnect 3kw	$ 2,595.00
SPAJHCHO	oil jacket hopper for reclaiming AIR jacket that reclaims requires two burners /either system same price	$ 4,750.00
	Brake system - electric is standard and all have brake away	
SPSBSA	surge brakes on single axle	$ 1,290.00

SPSBTA	surge brakes on tandem axle	$ 1,500.00
SSPH29	Hitch Extension 29 inches(standard on 3 &4 ton)	$ 700.00
SSPDRC	D- Rings 3/8 with double clevis, 3/8 DOT grade 70 Chain and 3/8 hooks with clips to tow truck(standard)	
SPTRMTH	Spare tire holder mounted on trailer	$ 385.00
SPTRL	Spare tire and rim shipped loose	$ 280.00
SPWC	Wheel Chocks	$ 180.00
	LIGHTING OPTIONS	
ARLEDSL	LED arrow stick front mounted on bracket(self leveling on dump trailers)	$ 1,135.00
SLSSL	strobe light non LED(self leveling on dump trailers) top door mounted	$ 420.00
SLEDSL	LED strobe light top door mount (self level on dump trailers)	$ 528.00
SPMS4M	mini strobes total of 4 (2 rear mounted ,2 midship on trailer frame)	$ 625.00
SPRMLEDL	rear spot lights LED adjustable with separate toggle switch	$ 785.00
	TOOLS AND ACCESSORIES	
SPFHP	platform in front of hopper, with railings Meets OHSA requirement	$ 900.00
SP7DTHVM	7 day 24 hour timer, hour meter, volt meter standard on recycler/reclaimer	$ 750.00
SP15GWJ	15 gallon water jug mounted in metal holder for water tanks on compacting tools	$ 350.00
SP2GMSH	holder and 2 gallon metal hand pump solvent sprayer for tools	$ 270.00
SP212VS3T	12vdc sprayer for tools and hopper for release solvent with 5 gallon tank	$ 870.00
SP12GST	solvent tank for dipping shovels in solvent(12 gallon)	$ 280.00
SP5PCTH	5 piece tool holder for brooms, shovels ,lute(tools not included)	$ 157.00
SPPTF20GF	propane torch w/ 20 gallon holder, regulator and pressure gauge 20 ft UL propane hose on bracket	$ 730.00
SPRHRP30	Propane retractable hose reel with 30 ft propane UL hose	$ 790.00
SPBDRWB	Bulldog Vibratory roller , Honda engine , compacts a 850 LBS with hold down basket Weighs 100LBS	$ 2,650.00
SPPCHL	plate or Bulldog Roller compactor hydraulic lift(plate compactor not included)	$ 2,250.00
BCDP15	12vdc marine battery charger (standard on hydraulic dump trailers)	$ 390.00
SPSHTBMP	Tool Box for small hand tools	$ 250.00
SP6PCH	cone holder(holds 6 cones(cones not included)	$ 120.00
20FE	20 LB fire extinguisher in quick release holder and weatherproof inspection tag	$ 310.00
SP30HTT	30 gallon heated tack tank, insulated, auto temp,gravity spigot	$ 2,750.00
SPHESVP	spray system for tack , Honda gas engine with asphalt pump, dead man spray wand and 30 ft of 1/2 inch hose	$ 2,950.00
SPTRHR	emulision retractable hose reel for tack sprayer	$ 690.00
SPCWP	Cold weather package 12vdc FUEL HEATER	$ 480.00
SBRAREC5	5 Gallon pail Reclimite	$109.00
SBSMTCK-5GAL	Asphalt Binder Tack	$ 90.00
SBRA200-2.5GAL	2.5 Gallon Release All	$ 100.00
	DISPENSING OPTIONS	
SPHDHT	hydraulic dump hopper with 2 cylinder lift includes,1400 Amp Battery,Audiable back up alarm, hydraulic disconnect switch,300 Amp fuse protection on electric over hydraulic system and charger,15 Amp Marine battery charger, 4 GA color coded wiring, Prop rod on lockable door, on large front tool box behind adjustable hitch with 7 gauge decking under box.	$ 4,650.00

SPSHDB	Hydraulic dump hopper with 2 cylinders and manual doors, 550CCA Marine battery, mounted in Plastic battery box,electric over hydraulic pack in small lockable metal vented box	$ 3,150.00
SPHTD	hydraulic top doors (manual standard)	$ 1,600.00
SPHRDS	hydraulic rear single door (manual standard)	$ 1,180.00
SPHRDD	dual rear hydraulic doors add to above single door	$ 950.00
SPAWDE	auger for 2, 3 & 4 ton trailers, includes , Kubota diesel engine 21HP, Hydraulic pump and motors, rear manual pivot swing chute, top bifold doors	$ 18,900.00
VK70AC	70 CFM hydraulic air compressor (available on Auger with Kubota diesel engine only)	$ 14,500.00
SP30GAC	30cfm gas operated air compressor	$ 11,500.00
AHR40	retractable hose reel and 40 ft or air hose with blow wand	$ 630.00
SPSMNT	skid mounted units with no trailer for slip in , includes lifting rings or fork pockets	-$ 1,500.00
SPSMNT	skid mounted units with no trailer for slip in , includes lifting rings or fork pockets	-$ 1,500.00
	Pothole Patcher Body: Spaulding 3TA Aspahlt Body	
	3Ton insulated asphalt body heated with diesel or propane chassis mounted with hydraulic top doors	$ 53,000.00
	4 ton hopper capacity add	$ 2,000.00
	5 ton hopper capacity add	$ 4,500.00
	6 ton hopper capacity add	$ 6,500.00
	8 ton hopper capacity add	$ 8,500.00
	REAR HOPPER OPTIONS	
	REAR CROSS AUGER AVAILABLE W/WITHHOPPER AUGER,ATTACHMENT MOVES 30 INCHES LEFT OR RIGHT FOR SIDE DELIVERY	$ 9,500.00
	rear auger rotates with 180 degree delivery span	$ 9,500.00
	rear fold up removable shovel apron	$ 1,250.00
	rear fip dooor shovel pan	$ 550.00
	rear pivoting swivel pan	$ 750.00
	Burner /heather options	
	propane or diesel hopper	
	electric heat as main source(2) 7000KW heaters powered by hydraulic generator (dual Pto and Pump required)	$ 18,500.00
	Auxillary electric overnight heat element for hopper 220V/ground fault and quick disconnect safety	$ 2,990.00
	Auxillary electric overnight heat element for hopper 110V ground fault and quick dissconnect switch	$ 2,790.00
	propane/diesel/truck enginge colant for emulision tank	$ 990.00
	Torch/sprayer options	
	Propane torch with regulator /30 ft hose(add 20LB propane cylinder holder if burner source is not propane)	$ 770.00
	air blow gun with 30 ft 30 (air source availabilty)	$ 695.00
	12VDc solvent sprayer with 10 gallon tank ,30 ft foot hose and spray wand	$ 900.00
	emulision gear pump / 30 foot of hose with wand and on/off valve	$ 2,950.00
	dead man tigger wand with replaceable spray nozzle	$ 720.00
	Hose Reel Option	

	air or, solvent hose reel	$ 490.00
	Propane hose reel	$ 790.00
	Emulision hose reel	$ 790.00
	Hydraulic retractable hose reel	$ 1,990.00
	Emulision tanks	
	30 gallon heated emulsion tank	$ 2,750.00
	60 gallon	$ 3,950.00
	80 gallon	$ 4,390.00
	Lighting Options	
	2 top door LED strobes(self leveling on dump model)	$ 850.00
	6 mini strobes	$ 850.00
	Arrow stick LED directional	$ 1,020.00
	LED Arrow Board	$ 2,800.00
	Hydraulic lift for arrow board to raise for high viability and lower , behind cab	$ 2,450.00
	Additional Options	
	Spoils bin under deck with weighted gravity design for despensing1/3 CU	$ 1,250.00
	cone holder	$ 250.00
	70 CFM air compressor hydraulic driven, for air tools (tools not included)	$ 12,000.00
	compactor hydraulic lift platfrom or Bulldog 500 lift each	$ 2,450.00
	sign box to hold various sytles of temporary road signs	$ 750.00
	Tool box for shovels, side hopper mount with lockable door	$ 2,750.00
	20 LB LP tank and holder	$ 550.00
	50 gallon horizontial frame mount LPG tank	$ 1,850.00
	dual hydraulic motor for extra torque on main hopper auger	$ 2,150.00
	agitator for auger dispensing hopper	$ 2,950.00
	oil jacketed hopper ,3T,4T	$ 4,750.00
	oil jacketed hopper ,5T,6T,8T	$ 5,500.00
	cab controls to operate top doors	$ 850.00
	20 LB fire extinguisher in quick release holder	$ 290.00
	10 gallon water jug (non drinkable)	$ 300.00
	Melter - Aplicator/crack sealer: Spaulding 110MKS	
	100 Gallon melting kettle oil jacket	$ 31,972.50
	Diesel fired burner, automatic temperature control,	
	hydraulic powered agitation, 1/5 inch gravity spigot, trailer mounted,	
	6000 LBS axle, electric brakes and breakaway, pintle eye	
	LED STT lighting, 4.8 HP Honda Gas Engine	
	125 gallon oil jacketed crack sealer	$ 55,000.00
	Diesel fired burner, automatic temperature control,	
	single axle trailer, 5200 LB torsion axles, electric brakes,	
	heated tower, heated cabinet, 110V heated hose, pumping system	
	Kubota, 3 cylinder, 24HP, diesel engine	
	225 Gallon Oil Jacketed Crack Sealer	$ 58,000.00
	Diesel fired burner, automatic temperature control,	
	single axle trailer, 7000 LB torsion axles, electric brakes,	

	heated tower, heated cabinet, 110V heated hose, pumping system	
	Kubota, 3 cylinder, 24HP, diesel engine	
	Options for Melting Kettle 100 MKT	
6HPDE	Diesel engine upgrade 6 HP (in lieu of standard gas engine to power hydraulic on agitator)	$ 4,700.00
6EF	Extened frame to carry 2 push carts with drop down gates includes frame upgrade to 6X2X5/16 frame	$ 4,700.00
3PC	3 wheel heated push cart	$ 2,300.00
15PPWW	pour pot with wheels (non heated) capacity minimum 1 gallon includes hold down bracket on trailer frame	$ 375.00
1000LBMH	Manual hoist for lifting carts or propane tank	$ 1,070.00
12VDCH	12VDC hoist in lieu of manual hoist	$ 21,500.00
HCL	Hydraulic cart lift in lieu of above hoist options (hold one cart)	$ 2,650.00
15MBC	Battery charger marine grade 15 AMP	$ 450.00
20FE	Fire extinguisher 20 LB ABC with holding bracket and weather proof inspection tag	$ 310.00
MLPB	Manual light 150,000 BTU propane burner in lieu of standard diesel burner includes holding bracket for one 100 LB propane cylinder	-$ 175.00
2SPBAT	Automatic temperture control in lieu of manual light on propane burner includes 2 setting for BTU out put, pre set with toggle switch operation	$ 550.00
100HB	Holding bracket for additional 100 LB propane tank (1 is standard)	$ 450.00
200PT	Propane torch 200,000 BTU with holding bracket and 30 Ft UL propane rated hose and regulator	$ 650.00
20PHB	Holding bracket for 20 LB propane tank (required on trailer with standard diesel burner if propane torch option is chosen)	$ 250.00
PHR	Propane retractable hose reel with 40 FT of UL rated hose	$ 650.00
	Option for Cracksealers - 125CS and 225CS	
SPPATHLB	propane in lieu of diesel burner includes brackets fo r2 - 100 LB vapor propane tanks	$ 375.00
SP2100LBPT	2- 100 LP propane tanks (empty)	$ 400.00
SPV70CLE	70 cfm air compressor includes 44HP diesel Kubota engine	$ 18,000.00
SBBMB-34	retractable hose reel and 40 FT of 3/4 inch air hose and air blow 5 foot wand, ball valve on/off	$ 1,650.00
SPABW	air blow wand pistol grip with nozzle tip 36 inches	$ 310.00
SBCS0305	extra 110V heated hose	$ 2,969.00
SBCS0307	extra wand hose holder with pivot sealing cup for heated hose	$ 1,250.00
SBCS0306ST	3 inch sealing swivel disk	$ 156.00
SP6PCH	Cone holder (hold 6 cones not included)	$ 120.00
20FE	20 LB fire extinguisher in quick release holder and weatherproof inspection tag	$ 310.00
SP30HTT	30 gallon heated tack tank, insulated, auto temp, gravity spigot	$ 2,750.00
SPHESVP	spray system for tack, Honda gas engine with asphalt pump, dead man spray wand and 30 Ft of 1/2 inch hose	$ 2,950.00
SPTRHR	emulsion retractable hose reel for tack sprayer	$ 690.00
SPCWP	Cold weather package 12VDC fuel heater	$ 480.00
	Asphalt Tack Distributors	
150TS	150 Gallon Tack Tank Skid Mount	$ 9,649.08
250TS	250 Gallon Tack Tank Skid Mount add to 150TS	$ 1,828.68

150TT	150TT Trailer mounted tanks, single axle, leaf spring suspension, 225/75/R15 tires, lighting	$ 2,450.00
250TT	250TT Trailer mounted tanks. Single axle, leaf springs suspension, 225/75/R15 tires, lighting	$ 2,450.00
	Aspahlt Tack Distributors OPTIONS	
LPAT	Automatic Temperature control on LP, 2 BTU settings 45,000 BTU & 90,000BTU	2700
DBINTT	Diesel Burner105,000 BTU , Automatic tempeture Contol, insulated tank	5900
DE6.7HP	Diesel 6.7HP Engine with 6:1 Gear reduction	4800
GR6:1	Gear Reduction6:1 on Honda Gas engine	375
ES	Electric start on either engine	1300
VP32	Viking Pump with built in relief on pump	900
RSB8	Rear 8 foot spray bar	1800
RSFB	recirulation from rear spray bar to tank	1250
P3	Pintle eye 3"	95
	ROLLER	
47EDI	Bulldog Vibratory single drum roller, weighs 100 LBS compaction 850 PSI	$ 2,550.00
BDRMB	mounting basket	$ 175.00

Code or Part No.	Option Description	Offered Price
	Melter- Aplicator/crack sealer: Spaulding 100MKS	
100MKS	100 gallon melting kettle oil jacket	$ 31,972.50
	diesel fired burner, automatic temperature control,	.
	hydraulic powered agitation, 1.5 inch gravity spigot,trailer mounted,	
	6000LB axle, electric brakes and breakaway,pintle eye	
	LED STT lighting,4.8 HP Honda Gas Engine	
Model 125CS	125 gallon oil jacketed crack sealer	$ 55,000.00
	diesel fired burner, automatic temperature control,	
	single axle trailer,5200 LB torsin axles, electric brakes,	
	heated tower, heated cabinet, 110v heated hose, pumping system	
	Kubota,3 cylinder, 24 HP, diesel engine	
Model 225CS	225 gallon oil jacketed crack sealer	$ 58,000.00
	diesel fired burner, automatic temperature control,	
	single axle trailer, 7000 LB axles with electric brakes,	
	heated tower, heated cabient,110v heated hose,pumping system	
	Kubota, ,3 cylinder,24 HP diesel engine	
	Options for 100MKS	
6HPDE	Diesel engine upgrade 6 HP(in lieu of standard gas engine to power hydrauilc on agitator)	$4,700.00
6EF	extended frame to carry 2 push carts with drop down gatesincludes frame upgrade to 6X2X5/16 frame	$4,700
3PC	3 wheel heated push cart	$2,300.00
15PPWW	Pour Pot with wheels (non heated)capacity minimum 1 gallon includes hold down bracket on trailer frame	$375.00
1000LBMH	Manual hoist for lifting carts or propane tank	$1,070.00
12VDCH	12VDC hoist in lieu of manual hoist	$2,150.00
HCL	Hydraulic cart lift in lieu of above hoist options(holds one cart)	$2,650.00
15MBC	Battery charger marine grade 15 AMP	$450.00
20FE	Fire extinguisher 20 LB ABC with holding bracket and weather proof inspection tag	$310.00
MLPB	Manual light 150,000 BTU propane burner in lieu of standard diesel burner includes holding bracket for one 100Lb propane cylinder	-$175.00
2SPBAT	Automatic temperture control in lieu of manual light on propane burner includes 2 setting for BTU out put, pre set with toggle switch operation	$550.00
100HB	Holding bracket for additional 100 LB propane tank (1 is standard)	$450.00
200PT	Propane torch 200,000 BTU with holding bracket and 30 ft UL Propane rated hose and regulator	$650.00
20PHB	Holding bracket for 20 LB propane tank (required on trailer with standard diesel burner if propane torch option is choosen)	$250.00
PHR	Propane retractable hose reel with 40 Ft of U.L rated hose	$650.00

	Options for 125 CS and 225CS	
SPPATHLB	propane in lieu of deisel burner includes brackets for 2- 100 LB vapor propane tanks	$ 375.00
SP2100LBPT	2- 100 LB propane tanks (empty)	$ 400.00
SPV70CLE	70 cfm air compressor includes 44HP diesel Kubota engine	$ 18,000.00
SBBMB-34	retractable hose reel and 40 ft of 3/4 inch air hose and air blow 5 foot wand ,ball valve on/off	$ 1,650.00
SPABW	air blow wand pistol grip with nozzle tip 36 inches	$ 310.00
SBCS0305	extra110V heated hose	$ 2,969.00
SBCS0307	extra wand hose holder with pivot sealing cup for heated hose	$ 1,250.00
SBCS0306ST	3 inch sealing swivel disk	$ 156.00
SBCS3PC	3 inch wand pivoting/swivel cup (aloowing to see material dispensing into cup and levels materail at the same time)	$ 195.00
SP12RPCST	1/2 round pencil style sealing tip end	$ 55.00
SP38SECST	3/8 swedged end sealing tip	$ 55.00
SPVSQ	v- shaped squeegee	$ 140.00
SPPATHLB	propane heat lance 6 ft with intagrated air supply torch for mixing hot air and propane(requires 20LB tank with diesel fired burner system) mild steel	$ 920.00
SPLABTAH	LAB heat lance and hose stainless steel(requires 20 Lb Propane holder)	$ 2,965.00
SP20LPHGP	20LB propane holder, tank and regulator and pressure gauge(tank not included)	$ 240.00
SPPTH30	200,000BTU propane hand held torch 30 inch , 30 ft hose, includes regulator, and striker(Tank not included)	$ 730.00
SPPH20LB	Propane holder for 20LB tank(tank not included)	$ 240.00
SPRHPT	Propane retractable hose reel	$ 630.00
SPDTHRAP40	dual retractable hose reel for propane and air combined torches with 40 ft dual hose(use for SPLABTAH OR SPPATHLB)	$ 1,400.00
SP110GOH	110V electric overnight heat in oil jacket	$ 950.00
SP20FE	Fire extinguisher 20 LB ABC with holding basket and weather proof inspection tag	$ 310.00
SPSLRP	strobe light on pedestal	$ 420.00
SPSLLEDP	strobe light LED on pedestal	$ 590.00
47CAD-ASLEDP	LED directional arrow stick	$ 1,250.00
SPMPTB	small tool box for hand tools	$ 90.00
SPTRMT	spare tire and rim mounted to trailer	$ 384.00
SPTRL	spare tire and rim shipped loose	$ 288.00
SPBC15	12vdv marine battery charger 15 amp	$ 312.00
47AD13500TTA	tandem axle on 125CS- 3500LB torsin each ,electric brakes, ST225/75R15 tires and rims	$ 1,950.00
47AD14500TTA	tandem axle on 225CS- 4500LB torsin each ,electric brakes, ST225/75R15 tires and rims	$ 2,350.00
SPD10SAB	surge brakes single axle with breakaway	$ 2,300.00
SPD10TSB	surge brakes tandem axles with breakaway	$ 2,700.00
SP2516BH	2 5/16 ball coupler	$ 150.00
LPSB307515	7day 24 hour timer	$ 273.00
	hour meter for burner	$ 62.00
	volt meter for burner	$ 62.00
SPMKBDB	maintanence kit for diesel burner includes 6 nozzlez, 3 cad cells, primary control, gaskets	$ 535.00
SPOMDCS	additional (one standard with purchase)diesel fired burner manual for crack sealer	$ 95.00
SPOMPCS	additional (one standard with purchase)propane fired burner manual	$ 95.00

SPEWSPT	2 year extended warranty(no extended warranty on kubota engine beyond 3 yr standard or 2000 HRS)	10% of total purchase price
	Pothole Patcher Body: Spaulding 3TA Aspahlt Body	
	3Ton insulated asphalt body heated with diesel or propane chassis mounted with hydraulic top doors	$ 53,000.00
	4 ton hopper capacity add	$ 2,000.00
	5 ton hopper capacity add	$ 4,500.00
	6 ton hopper capacity add	$ 6,500.00
	8 ton hopper capacity add	$ 8,500.00
	REAR HOPPER OPTIONS	
	REAR CROSS AUGER AVAILABLE W/WITHHOPPER AUGER,ATTACHMENT MOVES 30 INCHES LEFT OR RIGHT FOR SIDE DELIVERY	$ 9,500.00
	rear auger rotates with 180 degree delivery span	$ 9,500.00
	rear fold up removable shovel apron	$ 1,250.00
	rear fip dooor shovel pan	$ 550.00
	rear pivoting swivel pan	$ 750.00
	Burner /heather options	
	propane or diesel hopper	
	electric heat as main source(2) 7000KW heaters powered by hydraulic generator (dual Pto and Pump required)	$ 18,500.00
	Auxillary electric overnight heat element for hopper 220V/ground fault and quick disconnect safety	$ 2,990.00
	Auxillary electric overnight heat element for hopper 110V ground fault and quick dissconnect switch	$ 2,790.00
	propane/diesel/truck enginge colant for emulision tank	$ 990.00
	Torch/sprayer options	
	Propane torch with regulator /30 ft hose(add 20LB propane cylinder holder if burner source is not propane)	$ 770.00
	air blow gun with 30 ft 30 (air source availabilty)	$ 695.00
	12VDc solvent sprayer with 10 gallon tank ,30 ft foot hose and spray wand	$ 900.00
	emulision gear pump / 30 foot of hose with wand and on/off valve	$ 2,950.00
	dead man tigger wand with replaceable spray nozzle	$ 720.00
	Hose Reel Option	
	air or, solvent hose reel	$ 490.00
	Propane hose reel	$ 790.00
	Emulision hose reel	$ 790.00
	Hydraulic retractable hose reel	$ 1,990.00
	Emulision tanks	
	30 gallon heated emulsion tank	$ 2,750.00
	60 gallon	$ 3,950.00
	80 gallon	$ 4,390.00
	Lighting Options	
	2 top door LED strobes(self leveling on dump model)	$ 850.00
	6 mini strobes	$ 850.00
	Arrow stick LED directional	$ 1,020.00
	LED Arrow Board	$ 2,800.00

	Hydraulic lift for arrow board to raise for high viability and lower , behind cab	$ 2,450.00
	Additional Options	
	Spoils bin under deck with weighted gravity design for despensing1/3 CU	$ 1,250.00
	cone holder	$ 250.00
	70 CFM air compressor hydraulic driven, for air tools (tools not included)	$ 12,000.00
	compactor hydraulic lift platfrom or Bulldog 500 lift each	$ 2,450.00
	sign box to hold various sytles of temporary road signs	$ 750.00
	Tool box for shovels, side hopper mount with lockable door	$ 2,750.00
	20 LB LP tank and holder	$ 550.00
	50 gallon horizontial frame mount LPG tank	$ 1,850.00
	dual hydraulic motor for extra torque on main hopper auger	$ 2,150.00
	agitator for auger dispensing hopper	$ 2,950.00
	oil jacketed hopper ,3T,4T	$ 4,750.00
	oil jacketed hopper ,5T,6T,8T	$ 5,500.00
	cab controls to operate top doors	$ 850.00
	20 LB fire extinguisher in quick release holder	$ 290.00
	10 gallon water jug (non drinkable)	$ 300.00
	Spaulding 47CD1 AsphaltHeater/reclaimer: Spaulding 1T tow behind	
47CD1		
	Model 1TRS-1 ton hopper capacity trailer	$ 15,500.00
	6000 LB Axle, leaf spring suspension, 235/80/R16E tires and rims,	
	Electric brakes and brake away, pintle eye,	
	diesel or propane burner with automatice temperature control,	
	insulated air jacket hopper, insualted metal top loading doors,	
	rear single unloading door all manual operation, LED lighting	
	Model 2TRS -2 ton hopper capacity trailer	$ 16,280.00
	6000 LB single axle,235/80/R16 Etires, electric brakes w brakeaway,	
	pintle eye, diesel or propane fired burner with automatic temperture	
	insulated air jacket hopper, insulated metal top loading doors	
	rear single unloading door all manual operation, LED lighting	
	Model 3TRS-3 ton hopper capacity trailer	$ 19,550.00
	6000 LB tandem axles, 235/80/R16E tires,electric brakesw/ brakeaway	
	pintle eye, dieselor propane fired burner w/ automatic temperture control	
	insulated air jacket hopper, insulated metal top loading doors	
	rear single unloading door all manual operation, LED lighting	
	Model 4TRS- 4 ton hopper capacity trailer	$ 20,550.00
	7000LB axles, 235/80/R16E tires, electric brakesw/brakeaway	
	pintle eye, diesel or propane fired burner w/ automatic temperture control	
	insulated air jacket hooper, insulated metal top loading doors	
	rear single unloading door all manual operation, LED lighting	
	Model 6TRS-6 ton hopper capacity trailer	$ 46,250.00

	10,000LB axles, 235/75/R17.5tires and rims, electric brakes and brakeaway	
	diesel or propane burners dual, dump hopper with sizzor hoist, top loading	
	hydraulic doors,hydraulic rear unloading door, center duct work	
	top third burner option, pintle eye, LED lighting	
	options for 47CD1	
	HEATING SYSTEMS	
SPPAT-propane,SPDAT - DIESEL	Propane burner system 150,000BTU each burner with automatic temperature control OR DIESEL BURNER 105,000btu	$ 780.00
SP110VOLT	110V electric overnight heat with ground fault protection and safety disconnect	$ 2,141.00
SP220VOLT	220V electric overnight heat with ground fault protection and safety disconnect 3kw	$ 2,595.00
SPAJHCHO	oil jacket hopper for reclaiming AIR jacket that reclaims requires two burners /either system same price	$ 4,750.00
	Brake system - electric is standard and all have brake away	
SPSBSA	surge brakes on single axle	$ 1,290.00
SPSBTA	surge brakes on tandem axle	$ 1,500.00
SSPH29	Hitch Extension 29 inches(standard on 3 &4 ton)	$ 700.00
SSPDRC	D- Rings 3/8 with double clevis, 3/8 DOT grade 70 Chain and 3/8 hooks with clips to tow truck(standard)	
SPTRMTH	Spare tire holder mounted on trailer	$ 385.00
SPTRL	Spare tire and rim shipped loose	$ 280.00
SPWC	Wheel Chocks	$ 180.00
	LIGHTING OPTIONS	
ARLEDSL	LED arrow stick front mounted on bracket(self leveling on dump trailers)	$ 1,135.00
SLSSL	strobe light non LED(self leveling on dump trailers) top door mounted	$ 420.00
SLEDSL	LED strobe light top door mount (self level on dump trailers)	$ 528.00
SPMS4M	mini strobes total of 4 (2 rear mounted ,2 midship on trailer frame)	$ 625.00
SPRMLEDL	rear spot lights LED adjustable with separate toggle switch	$ 785.00
	TOOLS AND ACCESSORIES	
SPFHP	platform in front of hopper, with railings Meets OHSA requirement	$ 900.00
SP7DTHVM	7 day 24 hour timer, hour meter, volt meter standard on recycler/reclaimer	$ 750.00
SP15GWJ	15 gallon water jug mounted in metal holder for water tanks on compacting tools	$ 350.00
SP2GMSH	holder and 2 gallon metal hand pump solvent sprayer for tools	$ 270.00
SP212VS3T	12vdc sprayer for tools and hopper for release solvent with 5 gallon tank	$ 870.00
SP12GST	solvent tank for dipping shovels in solvent(12 gallon)	$ 280.00
SP5PCTH	5 piece tool holder for brooms, shovels ,lute(tools not included)	$ 157.00
SPPTF20GF	propane torch w/ 20 gallon holder, regulator and pressure gauge 20 ft UL propane hose on bracket	$ 730.00
SPRHRP30	Propane retractable hose reel with 30 ft propane UL hose	$ 790.00
SPBDRWB	Bulldog Vibratory roller , Honda engine , compacts a 850 LBS with hold down basket Weighs 100LBS	$ 2,650.00
SPPCHL	plate or Bulldog Roller compactor hydraulic lift(plate compactor not included)	$ 2,250.00
BCDP15	12vdc marine battery charger (standard on hydraulic dump trailers)	$ 390.00
SPSHTBMP	Tool Box for small hand tools	$ 250.00
SP6PCH	cone holder(holds 6 cones(cones not included)	$ 120.00
20FE	20 LB fire extinguisher in quick release holder and weatherproof inspection tag	$ 310.00
SP30HTT	30 gallon heated tack tank, insulated, auto temp,gravity spigot	$ 2,750.00
SPHESVP	spray system for tack , Honda gas engine with asphalt pump, dead man spray wand and 30 ft of 1/2 inch hose	$ 2,950.00

SPTRHR	emulision retractable hose reel for tack sprayer	$ 690.00
SPCWP	Cold weather package 12vdc FUEL HEATER	$ 480.00
	DISPENSING OPTIONS	
SPHDHT	hydraulic dump hopper with 2 cylinder lift includes,1400 Amp Battery,Audiable back up alarm, hydraulic disconnect switch,300 Amp fuse protection on electric over hydraulic system and charger,15 Amp Marine battery charger, 4 GA color coded wiring, Prop rod on lockable door, on large front tool box behind adjustable hitch with 7 gauge decking under box.	$ 4,650.00
SPSHDB	Hydraulic dump hopper with 2 cylinders and manual doors, 550CCA Marine battery, mounted in Plastic battery box,electric over hydraulic pack in small lockable metal vented box	$ 3,150.00
SPHTD	hydraulic top doors (manual standard)	$ 1,600.00
SPHRDS	hydraulic rear single door (manual standard)	$ 1,180.00
SPHRDD	dual rear hydraulic doors add to above single door	$ 950.00
SPAWDE	auger for 2, 3 & 4 ton trailers, includes , Kubota diesel engine 21HP, Hydraulic pump and motors, rear manual pivot swing chute, top bifold doors	$ 18,900.00
VK70AC	70 CFM hydraulic air compressor (available on Auger with Kubota diesel engine only)	$ 14,500.00
SP30GAC	30cfm gas operated air compressor	$ 11,500.00
AHR40	retractable hose reel and 40 ft or air hose with blow wand	$ 630.00
SPSMNT	skid mounted units with no trailer for slip in , includes lifting rings or fork pockets	-$ 1,500.00
SPSMNT	skid mounted units with no trailer for slip in , includes lifting rings or fork pockets	-$ 1,500.00
47DD1	**Asphalt Tack Distributors**	
150TS	150 gallon tack tank skid mount	$ 9,649.08
250TS	250 gallon tack tank skid mount add to 150TS	$ 1,828.68
150TT	150TT trailer mounted tanks,single axle,leaf spring suspension,225/75/R15 tires,lighting	$ 2,450.00
250TT	250TT trailer mounted tanks. Single axle,leaf spring suspension,225/75/R15 tires, lighting	$ 2,450.00
47DD1	**47DD1 Aspahlt Tack Distributors OPTIONS**	
LPAT	Automatic Temperature control on LP, 2 BTU settings 45,000 BTU & 90,000BTU	$ 2,700.00
DBINTT	Diesel Burner105,000 BTU , Automatic tempeture Contol, insulated tank	$ 5,900.00
DE6.7HP	Diesel 6.7HP Engine with 6:1 Gear reduction	$ 4,800.00
GR6:1	Gear Reduction6:1 on Honda Gas engine	$ 375.00
ES	Electric start on either engine	$ 1,300.00
VP32	Viking Pump with built in relief on pump	$ 900.00
RSB8	Rear 8 foot spray bar	$ 1,800.00
RFSB	recirulation from rear spray bar to tank	$ 1,250.00
P3	Pintle eye 3"	$ 95.00
47ED1	Bull dog vibratory single drum Roller, weighs 100 Lbs compaction 850PSI	$ 2,550.00
BDRMB	Mounting basket	$ 175.00

2016 RCV MSRP Unit Price Guide

Version 1

Effective January 1, 2016

2015 RCV MSRP Unit Price Guide

Front Loaders

Half/Pack® 3-7

Half/Pack® Sierra 8-12

Half/Pack® Freedom 13-17

Residential Front Loaders

HP Odyssey™ Residential 18-22

Sierra Odyssey™ Residential 23-27

Freedom Odyssey™ Residential 28-32

Commercial Front Loaders

HP Odyssey™ Commercial 33-37

Sierra Odyssey™ Commercial 38-42

Commercial Front Loaders

Freedom Odyssey™ Commercial 43-47

Rear Loaders

PT 1000™ 48-52

DuraPack 5000® 53-57

PowerTrak® Commercial 58-62

PowerTrak® Commercial PLUS 63-67

Automated Side Loaders

DuraPack® Rapid Rail® 68-72

DuraPack® Python® 73-76

Liberty™ 77-80

Automated Side Loaders

MultiPack® 81-85

Rapid Rail® 86-89

STARR® System 90-93

Multi-Compartment Vehicles

DuraPack® 4060 Split-Body 94-97

Manual Side Loaders

Retriever Satellite™ 98-100

Roll-Offs

KwikLift 101-102

LowLift 103-104

Resources

Bayne Cart Lifters & Carry Cans	108
Ready Truck & Chassis Modifications	109
Heil Factory and On-Site Training	110
Option Photo Index	111-117
Terms & Conditions	118
Warranty Policy	119
Sales Order Cover Page	120

Half/Pack®

High-Compaction Front Loader

Standard Equipment Features included in Base Price

- Heavy-duty sliding top door
- Hinged left-side body access door with step and grab
- Cab shield with hinged rubber tip extension – steel
- Front head closure screen
- Under hopper liquid sump with 2 clean-out doors
- Body service props for service hoist models and service lift
- Tailgate service props
- Fully automatic Shur-Lock™ tailgate latches
- Patented clamp-on arms
- 8,000 lb. capacity arms – WASTEC WRP 06-1996 rated
- Four arm shaft bearing supports
- Fork cross shaft rubber bumpers
- Bolt-on rubber arm stops
- Heavy-duty forks – 1 ½" t hick x 59" grip length
- Front mount single vane pump
- Chrome-plated cylinder rods and telescopic sleeves
- Crossed packing cylinders
- Chassis frame-mounted oil tank with level / temperature gauge and suction shut-off valve
- 3-micron return line filter with magnetic trap and in-cab filter bypass monitor
- 100-micron suction line strainer
- Fabric guard hose protection for all high-pressure hoses
- Cortex Controller™ with InSight™ diagnostic display
- Throttle advance kit
- Joystick in-cab air controls
- Complete array of in-cab function indicator lights
- 5 lb. In-Cab Fire Extinguisher
- Streetwise Hydraulics™
- Arm rest for operator controls
- Backup alarm
- Backup and license plate light
- LED center-mounted brake light
- LED duplicate high and low mount stop, turn, and tail lights
- LED mid-body turn signals
- Strobe light, amber mounted on lower tailgate - in-cab switch, pump on, and reverse activated
- Front and rear mud flaps -0 anti-sail / anti-splash
- Rear underride guard
- Hopper flood light
- Shovel kit mounted on back of the packer
- Low oil level sensor with light, buzzer, and pump shut-off
- Severe -duty wear bar kit
- 3" sump drain on street side and curb side
- Remote packer lube
- Remote tailgate hinge lube
- Arm / Fork over height warning kit
- 20 lb. fire extinguisher
- FMVSS #108 clearance lights and reflectors
- ICC reflective tape
- Rear camera bracket and flood lights - reverse activated
- Body undercoating
- Customer's choice of one color finish paint from Color Smart Brochure
- Standard 1-year warranty (2,000 Hours of Operation)
- ANSI Z 245.1-2012 Compliant
- Safety triangle
- Cavity coat and joint sealer

Effective January,1,2016 Half/Pack Sales Order Form

Base Units Half/Pack			
☐	20 cubic yard		$109,392
	☐ Serviceable EJECT ☐ Service Hoist		
☐	23 cubic yard		$108,870
	☐ Serviceable EJECT ☐ Service Hoist		
☐	28 cubic yard		$109,491
	☐ Serviceable EJECT ☐ Service Hoist		
☐	32 cubic yard		$112,766
	☐ Serviceable EJECT ☐ Service Hoist		
☐	Service Hoist Kit	B9	$4,215
Hopper Size			12 yd³
CHASSIS MUST COMFORM WITH HEIL'S MOST CURRENT CHASSIS SPECIFICATIONS FOUND AT WWW.HEIL.COM			
* NOTE: Red numbers reference Option Photo Index			
Mounting Options			
☐	Full Factory Mount for Service Hoist or Serviceable Eject - Includes Body Props and Rear Pivot		$5,290
☐	Mount at Dealer Destination		$705
Power Take Off / Pump Options			
☐	Front Mount Vane Pump		STD
☐	Operate at Idle (OAI) Front Mount Tandem Vane Pump		$3,605
☐	890 Hot Shift PTO with Single Vane Pump		$3,588
☐	897 Constant Duty PTO with Single Vane Pump		$3,588
Commercial Gripper Option			
☐	Commercial Gripper attachment to the fork cross shaft to service 32-96 gallon residential containers (Commercial Grabbers add 6.5" of overall height when arms are fully raised and forks fully tucked)		$6,760
Control Options			
☐	Throttle Limit Kit		$405
☐	Left Hand Lever In-Cab Air Controls in lieu of Joystick	CE6	$240
☐	Outside Air Lever Controls Kit (arms, forks and packer) with Throttle Advance	CE5	$2,245
Lighting and Electrical Accessories			
☐	Dual LED Container Work Lights - in-cab switch		$565
☐	Peterson Multi-Function (SMART) LED Strobe / Turn Lamps		$585
☐	Body Side Backing Assist Lights - LED		$485
☐	Dual Oval Flat LED Strobes Mounted Mid-T/G - in-cab switch, pump on, and reverse activated	L15	$1,015
☐	Dual Cab Guard Mounted Flood Lights		$477
☐	Dual LED Cab Mounted Oval Strobe Lights		$695
Camera Systems			
All camera systems are mounted with protective camera brackets and twin tailgate flood lights.			
CAMERA MONITOR LOCATION WILL BE CAB ROOF MOUNTED Swivel monitor bracket will be provided for dual drive chassis			
360 ˚ Camera Systems and Options			
☐	360 Degree Camera Package - Includes 360 degree camera system (4 camera), DVR capability, Dash Camera, Operator Facing Camera, and Hopper Camera.		$9,863
☐	360 Base Camera System - Includes 360 (4 Camera System) for Monitoring Only		$8,113
☐	Add DVR for Recording Function - Includes Dash Camera for Road Facing View		$1,613
☐	Add Operator Facing Camera for Operator Monitoring		$369
☐	Add Hopper Camera		$994
3rd Eye Camera Systems			
☐	3rd Eye Single Camera with LCD Color Monitor		$2,445
☐	3rd Eye Double Camera with LCD Color Monitor (Cameras on T/G & LH Cab)		$3,767
☐	3rd Eye Double Camera with LCD Color Monitor (Cameras on T/G & RH Cab)		$3,767
☐	3rd Eye Double Camera with LCD Color Monitor (Cameras on T/G & RH Alley)		$3,767
Load Cell Scale Systems			
☐	Heil Optimum Payload System (HOPS) using Air-Weigh Axle Scales	CE20	$8,400
☐	Air-Weigh Axle Scale System without Interlock	CE20	$7,836

Effective January,1,2016 Half/Pack Sales Order Form

	Auxiliary Axles and Tires		
	* NOTE: All axles MUST BE installed with tires so chassis can be re-certified to new GAWR and GVWR ratings		
☐	Watson & Chalin Self Steering Pusher Axle: 13,000 pound capacity, hub piloted or 20" spoke wheel hubs, automatic slack adjusters, type 16 air chambers, steering stabilizer kit and reverse lift kit -		$13,595
☐	Watson & Chalin Self Steering Tag Axle: 13,000 pound capacity, hub piloted or 20" spoke wheel hubs, automatic slack adjusters, type 16 air chambers, steering stabilizer kit and reverse lift kit		$13,595
☐	Watson & Chalin Rigid Pusher Axle: 25,000 pound capacity, hub piloted or 20" spoke wheel hubs, 30/30 brake chambers, automatic slack adjusters, 1,300 cubic inch air tank and regulator kit		$10,415
☐	Watson & Chalin Rigid Tag Axle: 25,000 pound capacity, hub piloted or 20" spoke wheel hubs, 30/30 brake chambers, automatic slack adjusters, 1,300 cubic inch air tank and regulator kit		$10,415
☐ #	Tag Axle Spill Shield - Prevents debris from collecting on the tag axle		$300
☐	255/70R-22.5 - Qty(2) load range H, 5,510 pound single max load at 120 psi with rims		$2,155
☐	275/70R-22.5 - Qty(2) load range H, 7,000 pound single max load at 120 psi with rims		$2,725
☐	11 R-22.5 - Qty(2) load range H, 6,610 pound single max load at 120 psi with rims		$2,295
	* Note: All auxiliary applications must be approved by Heil prior to order acceptance		
	Body Options		
☐	Roof Access Ladder		$1,295
☐	Hopper Floor Liner (3/16" - AR400)		$1,727
☐	Hopper Floor Liner (1/4" - AR400)		$2,745
☐	Body Roof Retainer Teeth - 2 rows at front of body - Minimizes springback in cardboard and recycling applications	B26	$1,000
☐	Tapered, Bolt-on Hopper Side Wind Screens - increases overall height to 13' 6"	B25	$1,456
☐	High Pressure Filter Kit	B3	$866
☐	High Pressure Filter Monitor		$645
☐	60 Gallon Washout Tank - side mounted - Not available with pusher axle	B10	$1,945
☐	60 Gallon Washout Tank - rear mounted - Not available with tag axle		$1,945
☐	Second 20 lb. Fire Extinguisher		$477
☐	Tool Box Bumper Mount - Steel	B6	$735
☐	Tool Box Bumper Mount - Aluminum		$870
☐	Fork Stop Kit - Increases overall height 20" when fork are in the full dump position		$235
☐	Cab Protector Extension Raise - Manual Jack		$1,095
☐	Rear Caution Decal		$275
☐	Wheel Chock Kit - Dual		$155
☐	Fall Protection Kit		$3,270
☐	D-Ring Fall Protection		$795
☐	Hydraulic Oil Tank Quick Disconnect Kit - For use with filter buggy		$785
☐	Perma Coat on Cab Protector		$565
☐	Hydraulic Raise Cab Protector Kit		$5,125
☐	Extendable Broom Kit - mounted in arm tube		$395
☐	Spill Kit		$325
☐	Packer Mounted Retainer Teeth		$695
☐	Hydraulic Oil Tank Heater - 500 watts		$1,140
☐	Fender Extension Kit		$695
☐	California Back Up Alarm		$650
☐	Infinity Series Packer/Eject Cylinders with scrapers and hardened rods to 50 HRC by Rosenboom - Includes Five (5) Year Packer/Eject Cylinder Warranty covering dents and dings		$2,935

Effective January,1,2016 Half/Pack Sales Order Form

CNrG Tailgate Mounted CNG - Includes Installation Fee			
☐	60 DGE CNG System		$38,855
☐	75 DGE CNG System		$40,475
☐	90 DGE CNG System		$46,008
☐	105 DGE CNG System		$52,548
CNrG Options			
☐	Front Bumper Fill with Kill Cap		$1,200
☐	Fast Fill Fuel Management Option		$1,800
☐	Defuel Transfer Hose - 35 ft.		$1,915
CNG Installation - Top of Body Installation			
☐	CNG Installation Charge - Includes brackets, temporary tank rental, hardware, and mounting of CNG system		$5,405
Extended Warranty			
☐	Five (5) Year (Maximum 10,000 hrs. of Operation) All other Non-Infinity Cylinder Warranty - Requires purchase of Infinity packer or eject Cylinders from above		$2,935
Paint Options			
NOTE: LIST PAINT CODES ON PAINT DIAGRAM			
☐	Customized Paint Color - Paint Color Code NOT included in the Color Smart Brochure		$375
☐	Two Tone Paint		$1,430
☐	Paint Striping - first stripe		$1,200
☐	Paint Striping - each additional stripe		$670
☐	Metallic Paint		$1,200
☐	Clear coat Finish		$1,670
☐	Anti-Graffiti Clear coat Finish		$2,400
☐	Prime Paint Only - deduct		($1,220)
TOTALS			
	Total from Options Above (MSRP)		**$0**
	Additional Options (SOARs, Chassis Mods, Etc.) Total		
	Subtotal		**$0**
	Dealer Discount (%)	**0%**	**$0**
	Dealer Net Price		**$0**
	Additional Discount (SPR)		
	Freight		
	Total Price per Unit		**$0**

HALF/PACK®

Paint Stripe & Accessories Requirements

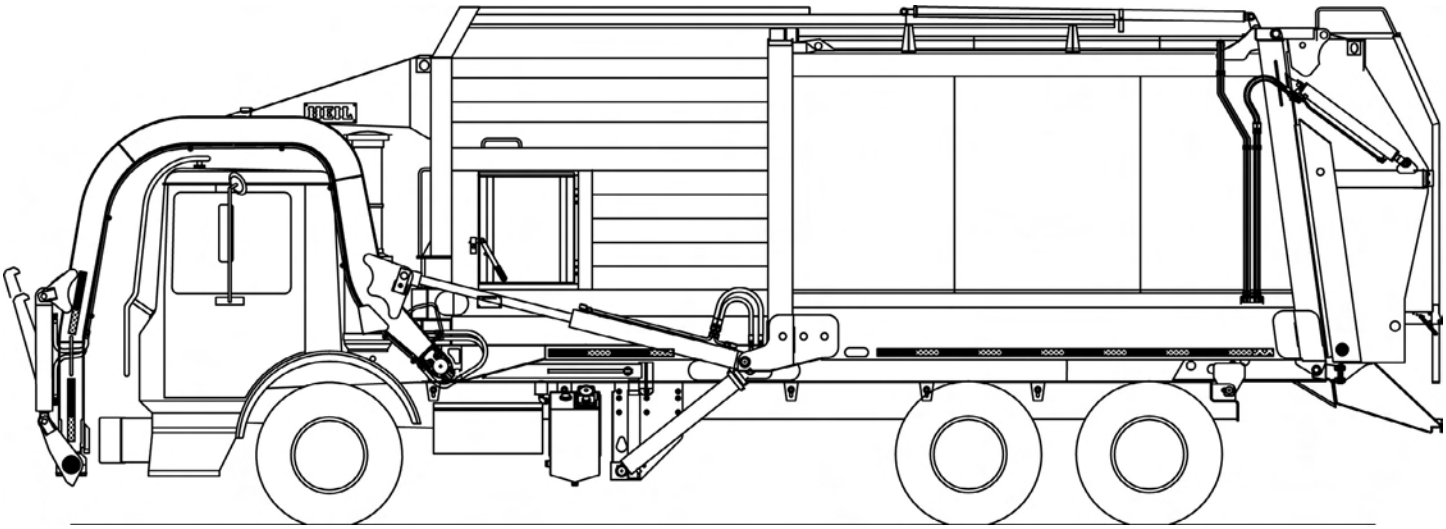

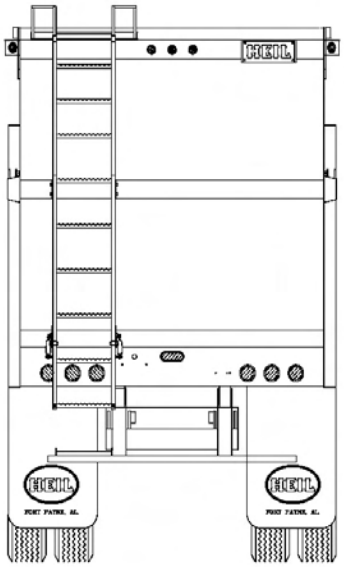

PAINT AND OPTIONS LAYOUT DETAIL
USE THIS FORM TO DESCRIBE PAINT SCHEMES
BE SPECIFIC ABOUT DIMENSIONS AND DETAILS

Sales Order #		Submitted by	
Customer			
Paint Color 1			
Paint Color 2			
Paint Color 3			
Chassis Make			
Chassis Model			
Wheelbase			
Body Size		Approved by	

Half/Pack® Sierra

Optimal Payload Front Loader

Standard Equipment Features included in Base Price

- Heavy-duty sliding top door
- Hinged left side body access door with step and grab
- Full aluminum cab shield with air cylinder assisted raise
- Under hopper liquid sump with 2 clean-out doors
- Body service props for service hoist models and service lift
- Tailgate service props
- Fully automatic Shur-Lock™ tailgate locks
- Patented clamp-on arms
- 8,000 lb. capacity arms - WASTEC WRP 06-1996 rated
- Two arm shaft bearing supports
- Fork cross shaft rubber bumpers
- Bolt-on rubber arm stops
- Heavy-duty forks - 1" thick x 59" grip length
- Front mount single vane pump
- Crossed packing cylinders
- Chrome-plated cylinder rods and telescopic sleeves
- Chassis frame-mounted aluminum oil tank with level / temperature gauge and suction shut-off valve
- 3-micron return line filter with magnetic trap and in-cab filter bypass monitor
- 100-micron suction line strainer
- Fabric guard hose protection for all high-pressure hoses
- Cortex Controller™ with InSight™ diagnostic display
- Throttle advance kit
- Joystick in-cab air controls
- Complete array of in-cab function indicator lights
- 5 lb. In-Cab Fire Extinguisher
- Streetwise Hydraulics™
- Backup Alarm
- Hopper Flood Light
- Low oil level sensor with light, buzzer, and pump shut-off
- Severe-duty wear bar kit
- 3" sump drain on street side and curb side
- Remote packer lube kit
- Remote tailgate hinge lube kit
- Shovel kit mounted on back of the packer
- Arm / Fork over height warning kit
- Backup and license plate light
- LED center-mounted brake light
- LED duplicate high and low mount stop, turn, and tail lights
- LED mid-body turn signals
- Strobe light, amber mounted on lower tailgate - in-cab switch, pump on, and reverse activated
- Front and rear mud flaps - anti-sail / anti-splash
- Rear underride guard
- 20 lb. fire extinguisher
- FMVSS #108 clearance lights & reflectors
- ICC reflective tape
- Rear camera bracket and flood lights - reverse activated
- Body undercoating
- Customer's choice of one color finish paint from ColorSmart brochure
- Standard 1-year warranty (1,250 Hours of Operation)
- ANSI Z 245.1-2012 Compliant
- Safety Triangle
- Cavity coat and joint sealer

Environmental Solutions Group
A DOVER COMPANY

Effective January,1,2016 Sierra Sales Order Form

Base Units Sierra		
☐ 28 cubic yard		$117,096
☐ Serviceable EJECT ☐ Service Hoist		
☐ Service Hoist Kit	B9	$4,215
Hopper Size		12 yd³
CHASSIS MUST COMFORM WITH HEIL'S MOST CURRENT CHASSIS SPECIFICATIONS AT WWW.HEIL.COM		
* NOTE: Red numbers reference Option Photo Index		
Mounting Options		
☐ Full Factory Mount for Service Hoist or Serviceable Eject - Includes Body Props and Rear Pivot		$5,290
☐ Mount at Dealer Destination		$705
Power Take Off / Pump Options		
☐ Front Mount Vane Pump		STD
☐ Operate at Idle (OAI) Front Mount Tandem Vane Pump		$3,605
☐ 890 Hot Shift PTO with Single Vane Pump		$3,588
☐ 897 Constant Duty PTO with Single Vane Pump		$3,588
Commercial Gripper Option		
☐ Commercial Gripper attachment to the fork cross shaft to service 32-96 gallon residential containers (Commercial Grabbers add 6.5" of overall height when arms are fully raised and forks fully tucked)		$6,760
Control Options		
☐ Throttle Limit Kit		$405
☐ Left Hand Lever In-Cab Air Controls in lieu of Joystick	CE6	$240
☐ Outside Air Lever Controls Kit (arms, forks and packer) with Throttle Advance	CE5	$2,245
Lighting and Electrical Accessories		
☐ Dual LED Container Work Lights - in-cab switch		$565
☐ Peterson Multi-Function (SMART) LED Strobe / Turn Lamps		$585
☐ Body Side Backing Assist Lights - LED		$485
☐ Dual Oval Flat LED Strobes Mounted Mid-T/G - in-cab switch, pump on, and reverse activated	L15	$1,015
☐ Dual Cab Guard Mounted Flood Lights		$477
☐ Dual LED Cab Mounted Oval Strobe Lights		$695
Camera Systems		
All camera systems are mounted with protective camera brackets and twin tailgate flood lights		
CAMERA MONITOR LOCATION WILL BE CAB ROOF MOUNTED		
Swivel monitor bracket will be provided for dual drive chassis		
360 ˚ Camera Systems and Options		
☐ 360 Degree Camera Package - Includes 360 degree camera system (4 camera), DVR capability, Dash Camera, Operator Facing Camera, and Hopper Camera.		$9,863
☐ 360 Base Camera System - Includes 360 (4 Camera System) for Monitoring Only		$8,113
☐ Add DVR for Recording Function - Includes Dash Camera for Road Facing View		$1,613
☐ Add Operator Facing Camera for Operator Monitoring		$369
☐ Add Hopper Camera		$994
3rd Eye Camera Systems		
☐ 3rd Eye Single Camera with LCD Color Monitor		$2,445
☐ 3rd Eye Double Camera with LCD Color Monitor (Cameras on T/G & LH Cab)		$3,767
☐ 3rd Eye Double Camera with LCD Color Monitor (Cameras on T/G & RH Cab)		$3,767
☐ 3rd Eye Double Camera with LCD Color Monitor (Cameras on T/G & RH Alley)		$3,767
Load Cell Scale Systems		
☐ Heil Optimum Payload System (HOPS) using Air-Weigh Axle Scales	CE20	$8,400
☐ Air-Weigh Axle Scale System without Interlock	CE20	$7,836

Effective January,1,2016 Sierra Sales Order Form

Auxiliary Axles and Tires		
* NOTE: All axles MUST BE installed with tires so chassis can be re-certified to new GAWR and GVWR ratings		
☐ Watson & Chalin Self Steering Pusher Axle: 13,000 pound capacity, hub piloted or 20" spoke wheel hubs, automatic slack adjusters, type 16 air chambers, steering stabilizer kit and reverse lift kit		$13,595
☐ Watson & Chalin Self Steering Tag Axle: 13,000 pound capacity, hub piloted or 20" spoke wheel hubs, automatic slack adjusters, type 16 air chambers, steering stabilizer kit and reverse lift kit		$13,595
☐ Watson & Chalin Rigid Pusher Axle: 25,000 pound capacity, hub piloted or 20" spoke wheel hubs, 30/30 brake chambers, automatic slack adjusters, 1,300 cubic inch air tank and regulator kit		$10,415
☐ Watson & Chalin Rigid Tag Axle: 25,000 pound capacity, hub piloted or 20" spoke wheel hubs, 30/30 brake chambers, automatic slack adjusters, 1,300 cubic inch air tank and regulator kit		$10,415
☐ Tag Axle Spill Shield - Prevents debris from collecting on the tag axle		$300
☐ 255/70R-22.5 - Qty(2) load range H, 5,510 pound single max load at 120 psi with rims		$2,155
☐ 275/70R-22.5 - Qty(2) load range H, 7,000 pound single max load at 120 psi with rims		$2,725
☐ 11 R-22.5 - Qty(2) load range H, 6,610 pound single max load at 120 psi with rims		$2,295
* Note: All auxiliary applications must be approved by Heil prior to order acceptance		
Body Options		
☐ Sliding Top Door - Composite - May not be compatible with roof mounted CNG system	B28	$4,665
☐ Roof Access Ladder		$1,295
☐ High Pressure Filter Kit	B3	$866
☐ High Pressure Filter Monitor		$645
☐ 60 Gallon Washout Tank - side mounted - Not available with pusher axle	B10	$1,945
☐ 60 Gallon Washout Tank - rear mounted - Not available with tag axle		$1,945
☐ Second 20 lb. Fire Extinguisher		$477
☐ Tool Box Bumper Mount - Steel	B6	$735
☐ Tool Box Bumper Mount - Aluminum		$870
☐ Rear Caution Decal		$275
☐ Wheel Chock Kit - Dual		$155
☐ Fall Protection Kit		$3,270
☐ D-Ring Fall Protection		$795
☐ Hydraulic Oil Tank Quick Disconnect Kit - For use with filter buggy		$785
☐ Perma Coat on Cab Protector		$565
☐ Extendable Broom Kit - mounted in arm tube		$395
☐ Spill Kit		$325
☐ Packer Mounted Retainer Teeth		$695
☐ Hydraulic Oil Tank Heater - 500 watts		$1,140
☐ Fender Extension Kit		$695
☐ California Back Up Alarm		$650
☐ Infinity Series Packer/Eject Cylinders with scrapers and hardened rods to 50 HRC by Rosenboom - Includes Five (5) Year Packer/Eject Cylinder Warranty covering dents and dings		$2,935
CNrG Tailgate Mounted CNG - Includes Installation Fee		
☐ 60 DGE CNG System		$38,855
☐ 75 DGE CNG System		$40,475
☐ 90 DGE CNG System		$46,008
☐ 105 DGE CNG System		$52,548

Effective January,1,2016 Sierra Sales Order Form

	CNrG Options		
☐	Front Bumper Fill with Kill Cap		$1,200
☐	Fast Fill Fuel Management Option		$1,800
☐	Defuel Transfer Hose - 35 ft.		$1,915
	CNG Installation - Top of Body Installation		
☐	CNG Installation Charge - Includes brackets, temporary tank rental, hardware, and mounting of CNG system		$5,405
	Extended Warranty		
☐	Five (5) Year (Maximum 10,000 hrs. of Operation) All other Non-Infinity Cylinder Warranty - Requires purchase of Infinity packer or eject Cylinders from above		$2,935
	Paint Options		
	NOTE: LIST PAINT CODES ON PAINT DIAGRAM		
☐	Customized Paint Color - Paint Color Code NOT included in the Color Smart Brochure		$375
☐	Two Tone Paint		$1,430
☐	Paint Striping - first stripe		$1,200
☐	Paint Striping - each additional stripe		$670
☐	Metallic Paint		$1,200
☐	Clear coat Finish		$1,670
☐	Anti-Graffiti Clear coat Finish		$2,400
☐	Prime Paint Only - deduct		($1,220)
	TOTALS		
	Total from Options Above (MSRP)		**$0**
	Additional Options (SOARs, Chassis Mods, Etc.) Total		
	Subtotal		**$0**
	Dealer Discount (%)	**0%**	**$0**
	Dealer Net Price		**$0**
	Additional Discount (SPR)		
	Freight		
	Total Price per Unit		**$0**

HALF/PACK® SIERRA

Paint Stripe & Accessories Requirements

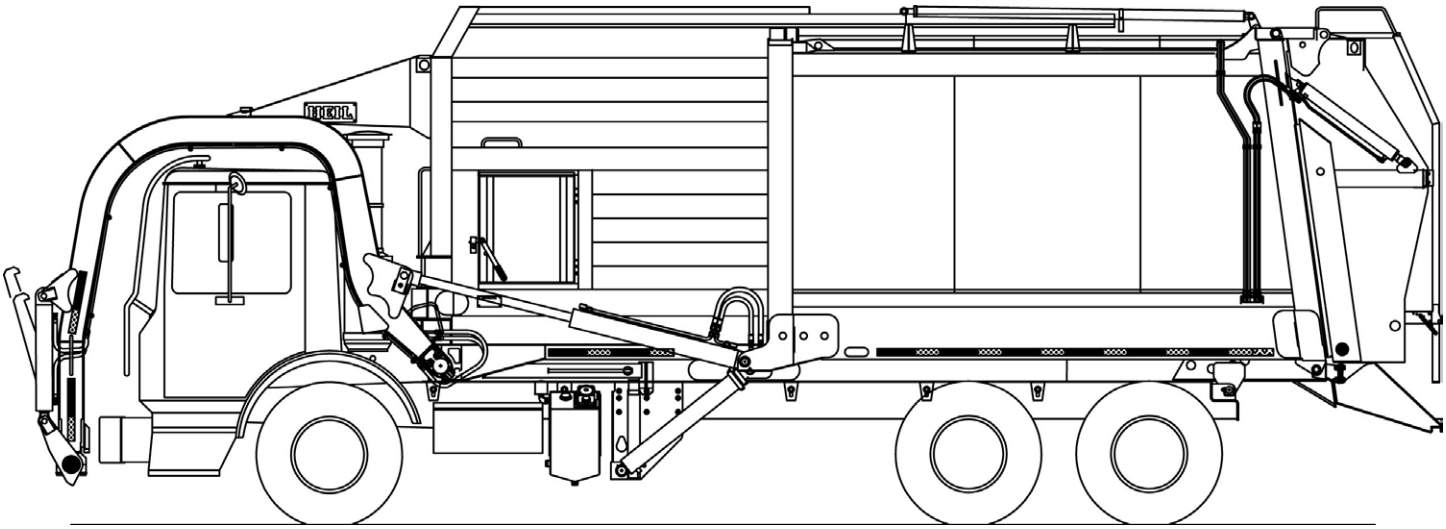

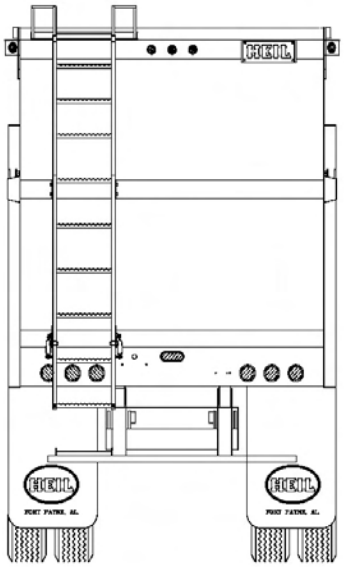

Paint and options layout detail
Use this form to describe paint schemes
Be specific about dimensions and details

Sales Order #		Submitted by	
Customer			
Paint Color 1			
Paint Color 2			
Paint Color 3			
Chassis Make			
Chassis Model			
Wheelbase			
Body Size		Approved by	

Half/Pack® Freedom

Lightweight Front Loader

Standard Equipment Features included in Base Price

- Hinged left-side aluminum body access door with step and grab
- Full aluminum cab shield with air cylinder assisted raise
- 3" underbody gate valve on street side for liquid removal
- Front head closure screen
- Body service props for service lift
- Tailgate service props
- Fully automatic Shur-Lock™ tailgate locks
- Patented clamp-on arms
- 8,000 lb. capacity arms - WASTEC WRP 06-1996 rated
- Two arm shaft bearing supports
- Bolt-on rubber arm stops
- Heavy-duty forks - 1" thick x 59" grip length
- Front mount single vane pump
- Chrome-plated cylinder rods and telescopic sleeves
- Chassis frame-mounted aluminum oil tank with level / temperature gauge and suction shut-off valve
- 3-micron return line filter with magnetic trap and in-cab filter bypass monitor
- Heil Optimum Payload System - HOPS™
- 100-micron suction line strainer
- Fabric guard hose protection for all high-pressure hoses
- Cortex Controller™ with InSight™ diagnostic display
- Throttle advance kit
- Joystick in-cab air controls
- Complete array of in-cab function indicator lights
- Arm rest for operator controls
- 5 lb. In-Cab Fire Extinguisher
- Streetwise Hydraulics™
- Backup Alarm
- Hopper Flood Light
- Low oil level sensor light, buzzer, and pump shut-off
- Severe-duty wear bar kit
- Remote packer lube kit
- Remote tailgate hinge lube kit
- Shovel kit mounted on back of the packer
- Arm / Fork overweight warning kit
- Backup and license plate light
- LED center-mounted brake light
- LED duplicate high and low mount stop, turn, and tail lights
- LED mid-body turn signals
- Strobe light, amber mounted on lower tailgate - in-cab switch, pump on, and reverse activated
- Front and rear mud flaps - anti-sail / anti-splash
- Rear underride guard
- 20 lb. fire extinguisher
- FMVSS #108 clearance lights & reflectors
- ICC reflective tape
- Rear camera bracket and flood lights - reverse activated
- Body undercoating
- Customer's choice of one color finish paint from ColorSmart brochure
- Standard 1-year warranty (2,000 Hours of Operation)
- ANSI Z 245.1-2012 Compliant
- Safety Triangle
- Cavity coat and join sealer

Effective January,1,2016 Freedom Sales Order Form

Base Units Freedom			
☐	20 cubic yard		$122,507
	☐ Serviceable EJECT ☐ Service Hoist		
☐	23 cubic yard		$121,997
	☐ Serviceable EJECT ☐ Service Hoist		
☐	28 cubic yard		$122,507
	☐ Serviceable EJECT ☐ Service Hoist		
☐	Service Hoist Kit	B9	$4,215
Hopper Size			12 yd³
CHASSIS MUST COMFORM WITH HEIL'S MOST CURRENT CHASSIS SPECIFICATIONS AT WWW.HEIL.COM			
* NOTE: Red numbers reference Option Photo Index			
Mounting Options			
☐	Full Factory Mount for Service Hoist or Serviceable Eject - Includes Body Props and Rear Pivot		$5,290
☐	Mount at Dealer Destination		$705
Power Take Off / Pump Options			
☐	Front Mount Vane Pump		STD
☐	Operate at Idle (OAI) Front Mount Tandem Vane Pump		$3,605
☐	890 Hot Shift PTO with Single Vane Pump		$3,588
☐	897 Constant Duty PTO with Single Vane Pump		$3,588
Commercial Gripper Option			
☐	Commercial Gripper attachment to the fork cross shaft to service 32-96 gallon residential containers (Commercial Grabbers add 6.5" of overall height when arms are fully raised and forks fully tucked)		$6,760
Control Options			
☐	Throttle Limit Kit		$405
☐	Left Hand Lever In-Cab Air Controls in lieu of Joystick	CE6	$240
☐	Outside Air Lever Controls Kit (arms, forks and packer) with Throttle Advance	CE5	$2,245
Lighting and Electrical Accessories			
☐	Dual LED Container Work Lights - in-cab switch		$565
☐	Peterson Multi-Function (SMART) LED Strobe / Turn Lamps		$585
☐	Body Side Backing Assist Lights - LED		$485
☐	Dual Cab Guard Mounted Flood Lights		$1,015
☐	Dual LED Cab Mounted Oval Strobe Lights		$477
☐	Dual Oval Flat LED Strobes Mounted Mid-T/G - in-cab switch, pump on, and reverse activated	L15	$695
Camera Systems			
All camera systems are mounted with protective camera brackets and twin tailgate flood lights			
CAMERA MONITOR LOCATION WILL BE CAB ROOF MOUNTED			
Swivel monitor bracket will be provided for dual drive chassis			
360 ˚ Camera Systems and Options			
☐	360 Degree Camera Package - Includes 360 degree camera system (4 camera), DVR capability, Dash Camera, Operator Facing Camera, and Hopper Camera.		$9,863
☐	360 Base Camera System - Includes 360 (4 Camera System) for Monitoring Only		$8,113
☐	Add DVR for Recording Function - Includes Dash Camera for Road Facing View		$1,613
☐	Add Operator Facing Camera for Operator Monitoring		$369
☐	Add Hopper Camera		$994
3rd Eye Camera Systems			
☐	3rd Eye Single Camera with LCD Color Monitor		$2,445
☐	3rd Eye Double Camera with LCD Color Monitor (Cmaeras on T/G & LH Cab)		$3,767
☐	3rd Eye Double Camera with LCD Color Monitor (Cameras on T/G & RH Cab)		$3,767
☐	3rd Eye Double Camera with LCD Color Monitor (Cameras on T/G & RH Alley)		$3,767

Effective January,1,2016 Freedom Sales Order Form

	Auxiliary Axles and Tires		
	* NOTE: All axles MUST BE installed with tires so chassis can be re-certified to new GAWR and GVWR ratings		
☐	Watson & Chalin Self Steering Pusher Axle: 13,000 pound capacity, hub piloted or 20" spoke wheel hubs, automatic slack adjusters, type 16 air chambers, steering stabilizer kit and reverse lift kit		$13,595
☐	Watson & Chalin Self Steering Tag Axle: 13,000 pound capacity, hub piloted or 20" spoke wheel hubs, automatic slack adjusters, type 16 air chambers, steering stabilizer kit and reverse lift kit		$13,595
☐	Watson & Chalin Rigid Pusher Axle: 25,000 pound capacity, hub piloted or 20" spoke wheel hubs, 30/30 brake chambers, automatic slack adjusters, 1,300 cubic inch air tank and regulator kit		$10,415
☐	Watson & Chalin Rigid Tag Axle: 25,000 pound capacity, hub piloted or 20" spoke wheel hubs, 30/30 brake chambers, automatic slack adjusters, 1,300 cubic inch air tank and regulator kit		$10,415
☐	Tag Axle Spill Shield - Prevents debris from collecting on the tag axle		$300
☐	255/70R-22.5 - Qty(2) load range H, 5,510 pound single max load at 120 psi with rims		$2,155
☐	275/70R-22.5 - Qty(2) load range H, 7,000 pound single max load at 120 psi with rims		$2,725
☐	11 R-22.5 - Qty(2) load range H, 6,610 pound single max load at 120 psi with rims		$2,295
* Note: All auxiliary applications must be approved by Heil prior to order acceptance			
	Body Options		
☐	Sliding Top Door - Composite - May not be compatible with roof mounted CNG system	B28	$4,665
☐	Roof Access Ladder - Aluminum		$1,375
☐	High Pressure Filter Kit	B3	$866
☐	High Pressure Filter Monitor		$645
☐	60 Gallon Washout Tank - side mounted - Not available with pusher axle	B10	$1,945
☐	60 Gallon Washout Tank - rear mounted - Not available with tag axle		$1,945
☐	Second 20 lb. Fire Extinguisher		$477
☐	Tool Box Bumper Mount - Steel	B6	$735
☐	Tool Box Bumper Mount - Aluminum		$870
☐	Rear Caution Decal		$275
☐	Wheel Chock Kit - Dual		$155
☐	Fall Protection Kit		$3,270
☐	D-Ring Fall Protection		$795
☐	Hydraulic Oil Tank Quick Disconnect Kit - For use with filter buggy		$785
☐	Perma Coat on Cab Protector		$565
☐	Extendable Broom Kit - mounted in arm tube		$395
☐	Spill Kit		$325
☐	Packer Mounted Retainer Teeth		$695
☐	Hydraulic Oil Tank Heater - 500 watts		$1,140
☐	Fender Extension Kit		$695
☐	California Back Up Alarm		$650
☐	Infinity Series Packer/Eject Cylinders with scrapers and hardened rods to 50 HRC by Rosenboom - Includes Five (5) Year Packer/Eject Cylinder Warranty covering dents and dings		$2,935
	CNrG Tailgate Mounted CNG - Includes Installation Fee		
☐	60 DGE CNG System		$38,855
☐	75 DGE CNG System		$40,475
☐	90 DGE CNG System		$46,008
☐	105 DGE CNG System		$52,548

Effective January,1,2016 Freedom Sales Order Form

CNrG Options			
☐	Front Bumper Fill with Kill Cap		$1,200
☐	Fast Fill Fuel Management Option		$1,800
☐	Defuel Transfer Hose - 35 ft.		$1,915
CNG Installation - Top of Body Installation			
☐ ###	CNG Installation Charge - Includes brackets, temporary tank rental, hardware, and mounting of CNG system		$5,405
Extended Warranty			
☐	Five (5) Year (Maximum 10,000 hrs. of Operation) All other Non-Infinity Cylinder Warranty - Requires purchase of Infinity packer or eject Cylinders from above		$2,935
Paint Options			
NOTE: LIST PAINT CODES ON PAINT DIAGRAM			
☐	Customized Paint Color - Paint Color Code NOT included in the Color Smart Brochure		$375
☐	Two Tone Paint		$1,430
☐	Paint Striping - first stripe		$1,200
☐	Paint Striping - each additional stripe		$670
☐	Metallic Paint		$1,200
☐	Clear coat Finish		$1,670
☐	Anti-Graffiti Clear coat Finish		$2,400
☐	Prime Paint Only - deduct		($1,220)
TOTALS			
	Total from Options Above (MSRP)		**$0**
	Additional Options (SOARs, Chassis Mods, Etc.) Total		
	Subtotal		**$0**
	Dealer Discount (%)	**0%**	**$0**
	Dealer Net Price		**$0**
	Additional Discount (SPR)		
	Freight		
	Total Price per Unit		**$0**

HALF/PACK® FREEDOM

Paint Stripe & Accessories Requirements

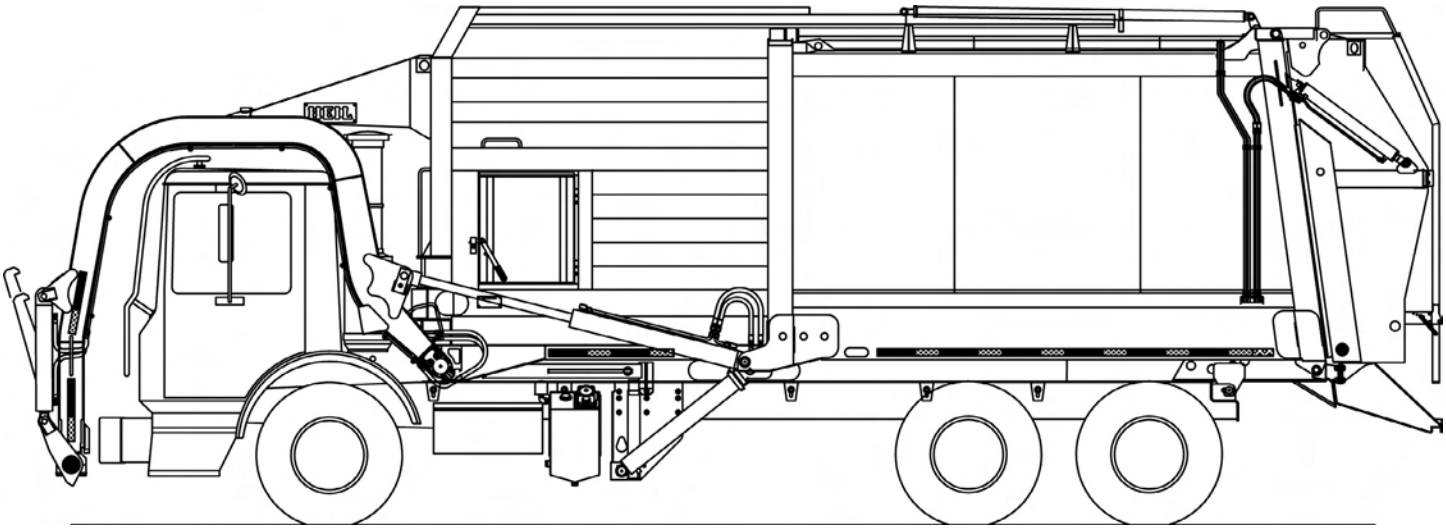

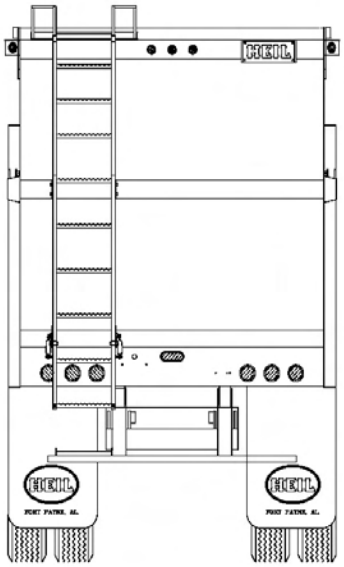

PAINT AND OPTIONS LAYOUT DETAIL
USE THIS FORM TO DESCRIBE PAINT SCHEMES
BE SPECIFIC ABOUT DIMENSIONS AND DETAILS

Sales Order #		Submitted by	
Customer			
Paint Color 1			
Paint Color 2			
Paint Color 3			
Chassis Make			
Chassis Model			
Wheelbase			
Body Size		Approved by	

Half/Pack® Odyssey ™ Residential

High Compaction Residential Front Loader

**Curotto-Can automated carry can sold separately

Standard Equipment Features included in Base Price

- Hinged left-side aluminum body access door with step and grab
- Cab shield w ith hinged rubber tip extension - steel
- Front head closure screen w ith splash guard
- Upper hopper liquid sump w ith 2 clean-out doors
- Body service props for servie hoist models and service lift
- Tailgate service props
- Fully automatic Shur-Lock™ tailgate latches
- Patented clamp-on arms
- 8,000 lb. capacity arms - WASTEC WRP 06-1996 rated
- Four arm shaft bearing supports
- Fork cross shaft-rubber bumpers
- Bolt-on rubber arm stops
- Heavy-duty forks - 1 1/2" thick x 63" grip length
- PTO Mounted Load Sense Piston Pump
- Chrome-plated cylinder rods and telescopic sleeves
- Crossed packing cylinders
- Chassis frame-mounted oil tank w ith level/temperature gauge and suction shut-offf valve
- 3-micron return line filter w ith magnetic trap and in-cab filter bypass monitor
- 100-micron suction line strainer
- Fabric guard hose preotection for all high-pressure hoses
- Cortex Controller™ with InSight™ diagnostic display
- Throttle advance kit
- Left and right-hand single multifunction joystick
- Complete array of in-cab function indicator lights
- Streetw ise Hydraulics™
- Solid state control panel
- High pressure filter kit
- Arm rest for operator controls
- 5 lb. In-Cab Fire Extinguisher
- Backup alarm

LED mid-body turn signals

- Strobe light, amber mounted on low er tailgate - in-cab sw itch, pump on, and reverse activated
- Front and rear mud flaps - anti-sail/anti-splash
- Rear underride guard
- Hopper flood light
- Low oil level sensor w ith light; buzzer, and pump shut-off
- Severe-duty w ear bar kit
- 3" sump drain on street side and curb side
- Remote tailgate hinge lube
- Arm/Fork over height w arning kit
- 20 lb. Fire Extinguisher
- FMVSS #108 clearance lights and reflectors
- ICC reflective tape
- Rear camera bracket and flood lights - reverse activated
- Body undercoating
- Customer's choice of one color finish paint from ColorSmart brochure
- Standard 1-year w arranty (2,000 Hours of Operation)
- ANSI Z 245.1-2012 Compliant
- Safety Triangle
- Cavity coat and join sealer
- Arm guides mounted to front bumper
- Forw ard facing flood lights on cab
- Upper arm reinforcement

Environmental Solutions Group
A DOVER COMPANY

Effective January,1,2016 HP Odyssey Residential Sales Order Form

Base Units HP Odyssey Residential			
☐	20 cubic yard - Not available with CNrG		$126,035
	☐ Serviceable EJECT ☐ Service Hoist		
☐	23 cubic yard		$125,525
	☐ Serviceable EJECT ☐ Service Hoist		
☐	28 cubic yard		$126,135
	☐ Serviceable EJECT ☐ Service Hoist		
☐	Service Hoist Kit - 187" Wheelbase 5 Axle Units WILL NOT accept the service hoist option*	B9	$4,215
	*5 Axle 187" Wheelbase - Hendrickson Auxiliary Axles Only with 275/R70/22.5 or smaller tires.		
Hopper Size			12 yd³
CHASSIS MUST COMFORM WITH HEIL'S MOST CURRENT CHASSIS SPECIFICATIONS AT WWW.HEIL.COM			
* NOTE: Red numbers reference Option Photo Index			
Mounting Options			
☐	Full Factory Mount for Service Hoist or Serviceable Eject - Includes Body Props and Rear Pivot		$5,290
☐	Mount at Dealer Destination		$705
Power Take Off / Pump Options			
☐	PTO Mounted Load Sense Piston pump - Includes PTO		STD
Automated Option			
☐	Hopper Seal Brush Kit - Includes Sides, Front, and Rear Bristle Hopper Seal Kit - For Curotto Only		$2,465
☐	Remote Curbside Controls		$1,486
☐	Installation of Auto cover controls - Auto cover must be purchased with the Curotto Can		$1,486
☐	In-Cab controls for integrated forward work lamps - Forward Work lamps must be purchased with the Curotto Can		$600
Semi-Automated Option			
☐	Carry Can Control Kit - Must Select to Add Controls to Order		$0
A complete selection of premium Bayne carry cans to suit any application is provided in this price book for your convenience			
Control Options			
☐	Dual Multifunction Joystick - Left and Right Hand		STD
☐	Left Hand 2-Lever Electric Control in lieu of Multifunction Joystick	CE6	$515
☐	Left Hand Single Axis Joystick Electric Control in lieu of Multifunction Joystick		$515
☐	Outside Electric Rocker Switch Controls Kit (arms, forks and packer) with Throttle Advance	CE5	$2,245
Lighting and Electrical Accessories			
☐	Dual LED Container Work Lights - in-cab switch		$565
☐	Peterson Multi-Function (SMART) LED Strobe / Turn Lamps		$585
☐	Body Side Backing Assist Lights - LED		$485
☐	Dual Oval Flat LED Strobes Mounted Mid-T/G - in-cab switch, pump on, and reverse activated	L15	$1,015
☐	Dual Cab Guard Mounted Flood Lights		$477
☐	Dual LED Cab Mounted Oval Strobe Lights		$695
Camera Systems			
All camera systems are mounted with protective camera brackets and twin tailgate flood lights.			
CAMERA MONITOR LOCATION WILL BE CAB ROOF MOUNTED Swivel monitor bracket will be provided for dual drive chassis			
360 ˚ Camera Systems and Options			
☐	360 Degree Camera Package - Includes 360 degree camera system (4 camera), DVR capability, Dash Camera, Operator Facing Camera, and Hopper Camera.		$9,863
☐	360 Base Camera System - Includes 360 (4 Camera System) for Monitoring Only		$8,113
☐	Add DVR for Recording Function - Includes Dash Camera for Road Facing View		$1,613
☐	Add Operator Facing Camera for Operator Monitoring		$369
☐	Add Hopper Camera		$994

Effective January,1,2016 HP Odyssey Residential Sales Order Form

3rd Eye Camera Systems			
☐	3rd Eye Single Camera with LCD Color Monitor		$2,445
☐	3rd Eye Double Camera with LCD Color Monitor (Cameras on T/G & LH Cab)		$3,767
☐	3rd Eye Double Camera with LCD Color Monitor (Cameras on T/G & RH Cab)		$3,767
☐	3rd Eye Double Camera with LCD Color Monitor (Cameras on T/G & RH Alley)		$3,767
Load Cell Scale Systems			
☐	Heil Optimum Payload System (HOPS) using Air-Weigh Axle Scales	CE20	$8,400
☐	Air-Weigh Axle Scale System without Interlock	CE20	$7,836
Auxiliary Axles and Tires			
* NOTE: All axles MUST BE installed with tires so chassis can be re-certified to new GAWR and GVWR ratings			
☐	Watson & Chalin Self Steering Pusher Axle: 13,000 pound capacity, hub piloted or 20" spoke wheel hubs, automatic slack adjusters, type 16 air chambers, steering stabilizer kit and reverse lift kit -		$13,595
☐	Watson & Chalin Self Steering Tag Axle: 13,000 pound capacity, hub piloted or 20" spoke wheel hubs, automatic slack adjusters, type 16 air chambers, steering stabilizer kit and reverse lift kit		$13,595
☐	Watson & Chalin Rigid Pusher Axle: 25,000 pound capacity, hub piloted or 20" spoke wheel hubs, 30/30 brake chambers, automatic slack adjusters, 1,300 cubic inch air tank and regulator kit		$10,415
☐	Watson & Chalin Rigid Tag Axle: 25,000 pound capacity, hub piloted or 20" spoke wheel hubs, 30/30 brake chambers, automatic slack adjusters, 1,300 cubic inch air tank and regulator kit		$10,415
☐	# Tag Axle Spill Shield - Prevents debris from collecting on the tag axle		$300
☐	255/70R-22.5 - Qty(2) load range H, 5,510 pound single max load at 120 psi with rims		$2,155
☐	275/70R-22.5 - Qty(2) load range H, 7,000 pound single max load at 120 psi with rims		$2,725
☐	11 R-22.5 - Qty(2) load range H, 6,610 pound single max load at 120 psi with rims		$2,295
* Note: All auxiliary applications must be approved by Heil prior to order acceptance			
Body Options			
☐	Sliding Top door - May not be compatible with roof mounted CNG systems		$3,685
☐	Roof Access Ladder		$1,295
☐	Hopper Floor Liner (3/16" - AR400)		$1,727
☐	Hopper Floor Liner (1/4" - AR400)		$2,745
☐	Body Roof Retainer Teeth - 2 rows at front of body - Minimizes springback in cardboard and recycling applications	B26	$1,000
☐	High Pressure Filter Kit	B3	STD
☐	High Pressure Filter Monitor		$645
☐	Second 20 lb. Fire Extinguisher		$477
☐	Tool Box Bumper Mount - Steel	B6	$735
☐	Tool Box Bumper Mount - Aluminum		$870
☐	Cab Protector Extension Raise - Manual Jack		$1,095
☐	Rear Caution Decal		$275
☐	Wheel Chock Kit - Dual		$155
☐	Fall Protection Kit		$3,270
☐	D-Ring Fall Protection		$795
☐	Hydraulic Oil Tank Quick Disconnect Kit - For use with filter buggy		$785
☐	Perma Coat on Cab Protector		$565
☐	Hydraulic Raise Cab Protector Kit		$5,125
☐	Extendable Broom Kit - mounted in arm tube		$395
☐	Spill Kit		$325
☐	Packer Mounted Retainer Teeth		$695
☐	Hydraulic Oil Tank Heater - 500 watts		$1,140
☐	Fender Extension Kit		$695
☐	California Back Up Alarm		$650
☐	Infinity Series Packer/Eject Cylinders with scrapers and hardened rods to 50 HRC by Rosenboom - Includes Five (5) Year Packer/Eject Cylinder Warranty covering dents and dings		$2,935

Effective January,1,2016 HP Odyssey Residential Sales Order Form

	CNrG Tailgate Mounted CNG - Includes Installation Fee		
☐	60 DGE CNG System		$38,855
☐	75 DGE CNG System		$40,475
☐	90 DGE CNG System		$46,008
☐	105 DGE CNG System		$52,548
	CNrG Options		
☐	Front Bumper Fill with Kill Cap		$1,200
☐	Fast Fill Fuel Management Option		$1,800
☐	Defuel Transfer Hose - 35 ft.		$1,915
	CNG Installation - Top of Body Installation		
☐ ###	CNG Installation Charge - Includes brackets, temporary tank rental, hardware, and mounting of CNG system		$5,405
	Extended Warranty		
☐	Five (5) Year (Maximum 10,000 hrs. of Operation) All other Non-Infinity Cylinder Warranty - Requires purchase of Infinity packer or eject Cylinders from above		$2,935
	Paint Options		
NOTE: LIST PAINT CODES ON PAINT DIAGRAM			
☐	Customized Paint Color - Paint Color Code NOT included in the Color Smart Brochure		$375
☐	Two Tone Paint		$1,430
☐	Paint Striping - first stripe		$1,200
☐	Paint Striping - each additional stripe		$670
☐	Metallic Paint		$1,200
☐	Clear coat Finish		$1,670
☐	Anti-Graffiti Clear coat Finish		$2,400
☐	Prime Paint Only - deduct		($1,220)
	TOTALS		
	Total from Options Above (MSRP)		**$0**
	Additional Options (SOARs, Chassis Mods, Etc.) Total		
	Subtotal		**$0**
	Dealer Discount (%)	**0%**	**$0**
	Dealer Net Price		**$0**
	Additional Discount (SPR)		
	Freight		
	Total Price per Unit		**$0**

FREEDOM ODYSSEY RESIDENTIAL

Paint Stripe & Accessories Requirements

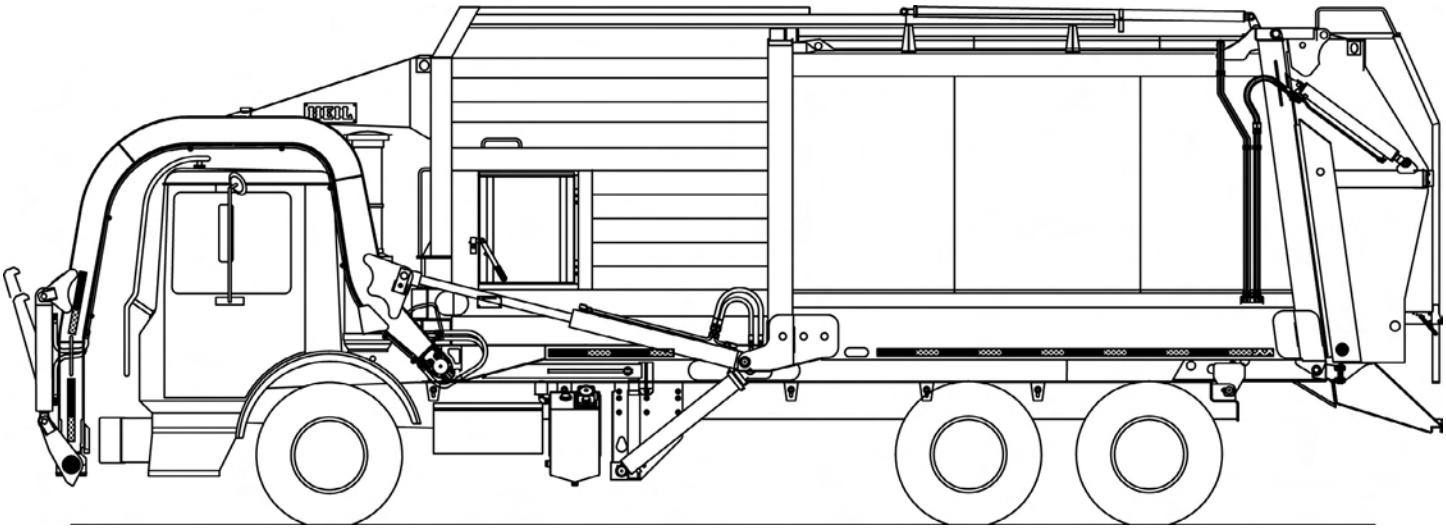

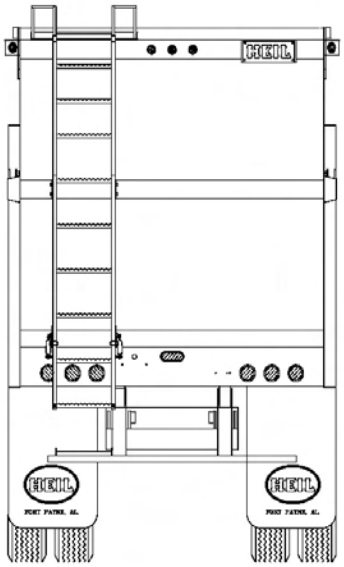

PAINT AND OPTIONS LAYOUT DETAIL
USE THIS FORM TO DESCRIBE PAINT SCHEMES
BE SPECIFIC ABOUT DIMENSIONS AND DETAILS

Sales Order #		Submitted by	
Customer			
Paint Color and Code 1			
Paint Color and Code 2			
Paint Color and Code 3			
Chassis Make			
Chassis Model			
Wheelbase			
Body Size		Approved by	

Sierra Odyssey ™ Residential

Optimal Payload Residential Front Loader

**Curotto-Can automated carry can sold separately

Standard Equipment Features included in Base Price

- Hinged left side body access door with step and grab
- Full aluminum cab shield with air cylinder assisted raise
- Under hopper liquid sump with 2 clean-out doors
- Body service props for service hoist models and service lift
- Tailgate service props
- Fully automatic Shur-Lock™ tailgate locks
- Patented clamp-on arms
- 8,000 lb. capacity arms - WASTEC WRP 06-1996 rated
- Four arm shaft bearing supports
- Fork cross shaft rubber bumpers
- Bolt-on rubber arm stops
- Heavy-duty forks - 1.5" thick x 63" grip length
- Front mount single vane pump
- Crossed packing cylinders
- Chrome-plated cylinder rods and telescopic sleeves
- Chassis frame-mounted aluminum oil tank with level / temperature gauge and suction shut-off valve
- 3-micron return line filter with magnetic trap and in-cab filter bypass monitor
- 100-micron suction line strainer
- Fabric guard hose protection for all high-pressure hoses
- Cortex Controller™ with InSight™ diagnostic display
- Throttle advance kit
- Joystick in-cab air controls
- Complete array of in-cab function indicator lights
- 5 lb. In-Cab Fire Extinguisher
- Streetwise Hydraulics™
- Backup Alarm
- Hopper Flood Light
- Low oil level sensor light, buzzer, and pump shut-off
- Severe-duty wear bar kit
- 3" sump drain on street side and curb side
- Remote packer lube kit
- Remote tailgate hinge lube kit
- Shovel kit mounted on back of the packer
- Arm / Fork over height warning kit
- Backup and license plate light
- LED center-mounted brake light
- LED duplicate high and low mount stop, turn, and tail lights
- LED mid-body turn signals
- Strobe light, amber mounted on lower tailgate - in-cab switch, pump on, and reverse activated
- Front and rear mud flaps - anti-sail / anti-splash
- Rear underride guard
- 20 lb. fire extinguisher
- FMVSS #108 clearance lights & reflectors
- ICC reflective tape
- Rear camera bracket and flood lights - reverse activated
- Body undercoating
- Customer's choice of one color finish paint from ColorSmart brochure
- Standard 1-year warranty (up to 2,000 Hours of Operation)
- ANSI Z 245.1-2012 Compliant
- Safety Triangle
- Cavity coat and joint sealer

Environmental Solutions Group
A DOVER COMPANY

Effective January,1,2016 Sierra Odyssey Residential Sales Order Form

Base Units Sierra Odyssey Residential			
☐	28 cubic yard		$133,588
	☐ Serviceable EJECT ☐ Service Hoist		
☐	Service Hoist Kit - 187" Wheelbase 5 Axle Units WILL NOT accept the service hoist option*	B9	$4,215
	*5 Axle 187" Wheelbase - Hendrickson Auxiliary Axles Only with 275/R70/22.5 or smaller tires.		
Hopper Size			12 yd³
CHASSIS MUST COMFORM WITH HEIL'S MOST CURRENT CHASSIS SPECIFICATIONS AT WWW.HEIL.COM			
* NOTE: Red numbers reference Option Photo Index			
Mounting Options			
☐	Full Factory Mount for Service Hoist or Serviceable Eject - Includes Body Props and Rear Pivot		$5,290
☐	Mount at Dealer Destination		$705
Power Take Off / Pump Options			
☐	PTO Mounted Load Sense Piston pump - Includes PTO		STD
Automated Option			
☐	Hopper Seal Brush Kit - Includes Sides, Front, and Rear Bristle Hopper Seal Kit - For Curotto Only		$2,465
☐	Remote Curbside Controls		$1,486
☐	Installation of Auto cover controls - Auto cover must be purchased with the Curotto Can		$1,486
☐	In-Cab controls for integrated forward work lamps - Forward Work lamps must be purchased with the Curotto Can		$600
Semi-Automated Option			
☐	Carry Can Control Kit - Must Select to Add Controls to Order		$0
A complete selection of premium Bayne carry cans to suit any application is provided in this price book for your convenience			
Control Options			
☐	Dual Multifunction Joystick - Left and Right Hand		STD
☐	Left Hand 2-Lever Electric Control in lieu of Multifunction Joystick	CE6	$515
☐	Left Hand Single Axis Joystick Electric Control in lieu of Multifunction Joystick		$515
☐	Outside Electric Rocker Switch Controls Kit (arms, forks and packer) with Throttle Advance	CE5	$2,245
Lighting and Electrical Accessories			
☐	Dual LED Container Work Lights - in-cab switch		$565
☐	Peterson Multi-Function (SMART) LED Strobe / Turn Lamps		$585
☐	Body Side Backing Assist Lights - LED		$485
☐	Dual Oval Flat LED Strobes Mounted Mid-T/G - in-cab switch, pump on, and reverse activated	L15	$1,015
☐	Dual Cab Guard Mounted Flood Lights		$477
☐	Dual LED Cab Mounted Oval Strobe Lights		$695
Camera Systems			
All camera systems are mounted with protective camera brackets and twin tailgate flood lights.			
CAMERA MONITOR LOCATION WILL BE CAB ROOF MOUNTED Swivel monitor bracket will be provided for dual drive chassis			
360 ˚ Camera Systems and Options			
☐	360 Degree Camera Package - Includes 360 degree camera system (4 camera), DVR capability, Dash Camera, Operator Facing Camera, and Hopper Camera.		$9,863
☐	360 Base Camera System - Includes 360 (4 Camera System) for Monitoring Only		$8,113
☐	Add DVR for Recording Function - Includes Dash Camera for Road Facing View		$1,613
☐	Add Operator Facing Camera for Operator Monitoring		$369
☐	Add Hopper Camera		$994
3rd Eye Camera Systems			
☐	3rd Eye Single Camera with LCD Color Monitor		$2,445
☐	3rd Eye Double Camera with LCD Color Monitor (Cameras on T/G & LH Cab)		$3,767
☐	3rd Eye Double Camera with LCD Color Monitor (Cameras on T/G & RH Cab)		$3,767
☐	3rd Eye Double Camera with LCD Color Monitor (Cameras on T/G & RH Alley)		$3,767

Effective January,1,2016 Sierra Odyssey Residential Sales Order Form

Load Cell Scale Systems			
☐	Heil Optimum Payload System (HOPS) using Air-Weigh Axle Scales	CE20	$8,400
☐	Air-Weigh Axle Scale System without Interlock	CE20	$7,836
Auxiliary Axles and Tires			
* NOTE: All axles MUST BE installed with tires so chassis can be re-certified to new GAWR and GVWR ratings			
☐	Watson & Chalin Self Steering Pusher Axle: 13,000 pound capacity, hub piloted or 20" spoke wheel hubs, automatic slack adjusters, type 16 air chambers, steering stabilizer kit and reverse lift kit -		$13,595
☐	Watson & Chalin Self Steering Tag Axle: 13,000 pound capacity, hub piloted or 20" spoke wheel hubs, automatic slack adjusters, type 16 air chambers, steering stabilizer kit and reverse lift kit		$13,595
☐	Watson & Chalin Rigid Pusher Axle: 25,000 pound capacity, hub piloted or 20" spoke wheel hubs, 30/30 brake chambers, automatic slack adjusters, 1,300 cubic inch air tank and regulator kit		$10,415
☐	Watson & Chalin Rigid Tag Axle: 25,000 pound capacity, hub piloted or 20" spoke wheel hubs, 30/30 brake chambers, automatic slack adjusters, 1,300 cubic inch air tank and regulator kit		$10,415
☐#	Tag Axle Spill Shield - Prevents debris from collecting on the tag axle		$300
☐	255/70R-22.5 - Qty(2) load range H, 5,510 pound single max load at 120 psi with rims		$2,155
☐	275/70R-22.5 - Qty(2) load range H, 7,000 pound single max load at 120 psi with rims		$2,725
☐	11 R-22.5 - Qty(2) load range H, 6,610 pound single max load at 120 psi with rims		$2,295
* Note: All auxiliary applications must be approved by Heil prior to order acceptance			
Body Options			
☐	Sliding Top Door - May not be compatible with roof mounted CNG system		$3,685
☐	Roof Access Ladder		$1,295
☐	Hopper Floor Liner (3/16" - AR400)		$1,727
☐	Hopper Floor Liner (1/4" - AR400)		$2,745
☐	Body Roof Retainer Teeth - 2 rows at front of body - Minimizes springback in cardboard and recycling applications	B26	$1,000
☐	High Pressure Filter Kit	B3	STD
☐	High Pressure Filter Monitor		$645
☐	Second 20 lb. Fire Extinguisher		$477
☐	Tool Box Bumper Mount - Steel	B6	$735
☐	Tool Box Bumper Mount - Aluminum		$870
☐	Rear Caution Decal		$275
☐	Wheel Chock Kit - Dual		$155
☐	Fall Protection Kit		$3,270
☐	D-Ring Fall Protection		$795
☐	Hydraulic Oil Tank Quick Disconnect Kit - For use with filter buggy		$785
☐	Perma Coat on Cab Protector		$565
☐	Hydraulic Raise Cab Protector Kit - Will Receive Steel Cab Shield in Lieu of Aluminum		$5,125
☐	Extendable Broom Kit - mounted in arm tube		$395
☐	Spill Kit		$325
☐	Packer Mounted Retainer Teeth		$695
☐	Hydraulic Oil Tank Heater - 500 watts		$1,140
☐	Fender Extension Kit		$695
☐	California Back Up Alarm		$650
☐	Infinity Series Packer/Eject Cylinders with scrapers and hardened rods to 50 HRC by Rosenboom - Includes Five (5) Year Packer/Eject Cylinder Warranty covering dents and dings		$2,935

Effective January,1,2016 Sierra Odyssey Residential Sales Order Form

CNrG Tailgate Mounted CNG - Includes Installation Fee			
☐	60 DGE CNG System		$38,855
☐	75 DGE CNG System		$40,475
☐	90 DGE CNG System		$46,008
☐	105 DGE CNG System		$52,548
CNrG Options			
☐	Front Bumper Fill with Kill Cap		$1,200
☐	Fast Fill Fuel Management Option		$1,800
☐	Defuel Transfer Hose - 35 ft.		$1,915
CNG Installation - Top of Body Installation			
☐ ###	CNG Installation Charge - Includes brackets, temporary tank rental, hardware, and mounting of CNG system		$5,405
Extended Warranty			
☐	Five (5) Year (Maximum 10,000 hrs. of Operation) All other Non-Infinity Cylinder Warranty - Requires purchase of Infinity packer or eject Cylinders from above		$2,935
Paint Options			
NOTE: LIST PAINT CODES ON PAINT DIAGRAM			
☐	Customized Paint Color - Paint Color Code NOT included in the Color Smart Brochure		$375
☐	Two Tone Paint		$1,430
☐	Paint Striping - first stripe		$1,200
☐	Paint Striping - each additional stripe		$670
☐	Metallic Paint		$1,200
☐	Clear coat Finish		$1,670
☐	Anti-Graffiti Clear coat Finish		$2,400
☐	Prime Paint Only - deduct		($1,220)
TOTALS			
	Total from Options Above (MSRP)		**$0**
	Additional Options (SOARs, Chassis Mods, Etc.) Total		
	Subtotal		**$0**
	Dealer Discount (%)	**0%**	**$0**
	Dealer Net Price		**$0**
	Additional Discount (SPR)		
	Freight		
	Total Price per Unit		**$0**

SIERRA ODYSSEY RESIDENTIAL

Paint Stripe & Accessories Requirements

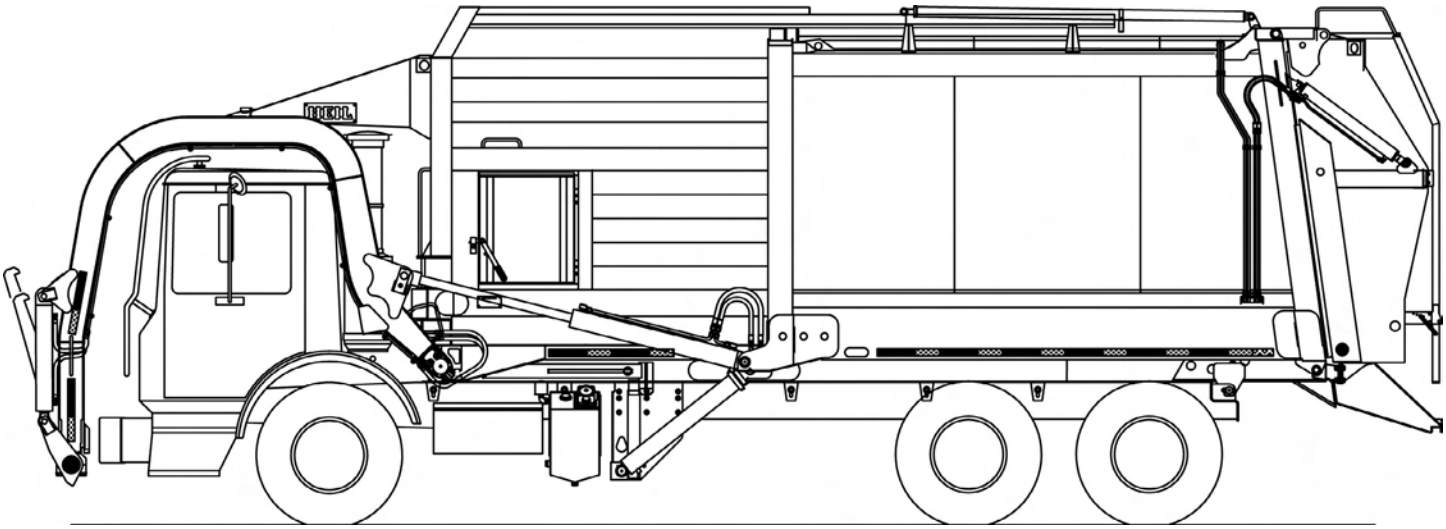

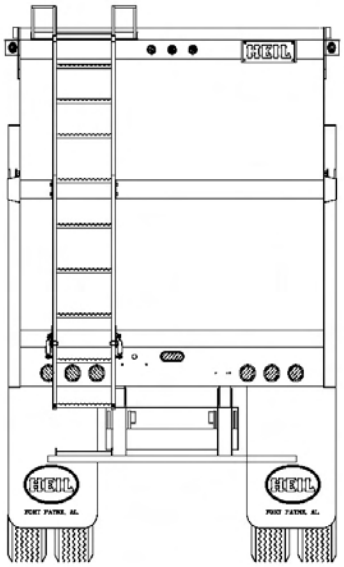

PAINT AND OPTIONS LAYOUT DETAIL
USE THIS FORM TO DESCRIBE PAINT SCHEMES
BE SPECIFIC ABOUT DIMENSIONS AND DETAILS

Sales Order #		Submitted by	
Customer			
Paint Color and Code 1			
Paint Color and Code 2			
Paint Color and Code 3			
Chassis Make			
Chassis Model			
Wheelbase			
Body Size		Approved by	

Freedom Odyssey ™ Residential

High-Performance Optimal Payload Residential Front Loader

**Curotto-Can automated carry can sold separately

Standard Equipment Features included in Base Price

- Hinged left-side aluminum body access door with step and grab
- Full aluminum cab shield with air cylinder assisted raise
- 3" underbody gate valve on street side for liquid removal
- Front head closure screen with splash guard
- Body service props for service lift
- Tailgate service props
- Fully automatic Shur-Lock™ tailgate locks
- Patented clamp-on arms
- 8,000 lb. capacity arms - WASTEC WRP 06-1996 rated
- Four arm shaft bearing supports
- Bolt-on rubber arm stops
- Heavy-duty forks - 1.5" thick x 63" grip length
- PTO Mounted Load Sense Piston Pump
- Chrome-plated cylinder rods and telescopic sleeves
- Chassis frame-mounted aluminum oil tank with level / temperature gauge and suction shut-off valve
- 3-micron return line filter with magnetic trap and in-cab filter bypass monitor
- Heil Optimum Payload System - HOPS™
- 100-micron suction line strainer
- Fabric guard hose protection for all high-pressure hoses
- Cortex Controller™ with InSight™ diagnostic display
- Throttle advance kit
- Left and right-hand single multifunction joystick
- Complete array of in-cab function indicator lights
- Arm rest for operator controls
- 5 lb. In-Cab Fire Extinguisher
- Solid state control panel
- Streetwise Hydraulics™
- Backup Alarm
- Hopper Flood Light
- Low oil level sensor light, buzzer, and pump shut-off
- Severe-duty wear bar kit
- Remote packer lube kit
- Remote tailgate hinge lube kit
- Shovel kit mounted on back of the packer
- Arm / Fork overweight warning kit
- Backup and license plate light
- LED center-mounted brake light
- LED duplicate high and low mount stop, turn, and tail lights
- LED mid-body turn signals
- Strobe light, amber mounted on lower tailgate - in-cab switch, pump on, and reverse activated
- Front and rear mud flaps - anti-sail / anti-splash
- Rear underride guard
- 20 lb. fire extinguisher
- FMVSS #108 clearance lights & reflectors
- ICC reflective tape
- Rear camera bracket and flood lights - reverse activated
- Body undercoating
- Customer's choice of one color finish paint from ColorSmart brochure
- Standard 1-year warranty (up to 2,000 Hours of Operation)
- ANSI Z 245.1-2012 Compliant
- Safety Triangle
- Cavity coat and joint sealer
- Upper arm reinforcement
- Forward facing flood lights on cab
- High pressure filter kit
- Arm guides mounted to front bumper

Environmental Solutions Group
A DOVER COMPANY

Effective January,1,2016 Freedom Odyssey Residential Sales Order Form

Base Units Freedom Odyssey Residential			
☐	20 cubic yard		$138,435
	☐ Serviceable EJECT ☐ Service Hoist		
☐	23 cubic yard		$137,935
	☐ Serviceable EJECT ☐ Service Hoist		
☐	28 cubic yard		$138,435
	☐ Serviceable EJECT ☐ Service Hoist		
☐	Service Hoist Kit - 187" Wheelbase 5 Axle Units WILL NOT accept the service hoist option*	B9	$4,215
	*5 Axle 187" Wheelbase - Hendrickson Auxiliary Axles Only with 275/R70/22.5 or smaller tires.		
Hopper Size			12 yd³
CHASSIS MUST COMFORM WITH HEIL'S MOST CURRENT CHASSIS SPECIFICATIONS AT WWW.HEIL.COM			
* NOTE: Red numbers reference Option Photo Index			
Mounting Options			
☐	Full Factory Mount for Service Hoist or Serviceable Eject - Includes Body Props and Rear Pivot		$5,290
☐	Mount at Dealer Destination		$705
Power Take Off / Pump Options			
☐	PTO Mounted Load Sense Piston pump - Includes PTO		STD
Residential Front Loader Options			
☐	Hopper Seal Brush Kit - Includes Sides, Front, and Rear Bristle Hopper Seal Kit - For Curotto Only		$2,465
☐	Remote Curbside Controls		$1,486
☐	Installation of Auto cover controls - Auto cover must be purchased with the Curotto Can		$1,486
☐	In-Cab controls for integrated forward work lamps - Forward Work lamps must be purchased with the Curotto Can		$600
Semi-Automated Option			
☐	Carry Can Control Kit - Must Select to Add Controls to Order		$0
A complete selection of premium Bayne carry cans to suit any application is provided in this price book for your convenience			
Control Options			
☐	Dual Multifunction Joystick - Left and Right Hand		STD
☐	Left Hand 2-Lever Electric Control in lieu of Multifunction Joystick	CE6	$515
☐	Left Hand Single Axis Joystick Electric Control in lieu of Multifunction Joystick		$515
☐	Outside Electric Rocker Switch Controls Kit (arms, forks and packer) with Throttle Advance	CE5	$2,245
Lighting and Electrical Accessories			
☐	Dual LED Container Work Lights - in-cab switch		$565
☐	Peterson Multi-Function (SMART) LED Strobe / Turn Lamps		$585
☐	Body Side Backing Assist Lights - LED		$485
☐	Dual Oval Flat LED Strobes Mounted Mid-T/G - in-cab switch, pump on, and reverse activated	L15	$1,015
☐	Dual Cab Guard Mounted Flood Lights		$477
☐	Dual LED Cab Mounted Oval Strobe Lights		$695
Camera Systems			
All camera systems are mounted with protective camera brackets and twin tailgate flood lights			
CAMERA MONITOR LOCATION WILL BE CAB ROOF MOUNTED			
360 ˚ Camera Systems and Options			
☐	360 Degree Camera Package - Includes 360 degree camera system (4 camera), DVR capability, Dash Camera, Operator Facing Camera, and Hopper Camera.		$9,863
☐	360 Base Camera System - Includes 360 (4 Camera System) for Monitoring Only		$8,113
☐	Add DVR for Recording Function - Includes Dash Camera for Road Facing View		$1,613
☐	Add Operator Facing Camera for Operator Monitoring		$369
☐	Add Hopper Camera		$994

Effective January,1,2016 Freedom Odyssey Residential Sales Order Form

	3rd Eye Camera Systems		
Swivel monitor bracket will be provided for dual drive chassis			
☐	3rd Eye Single Camera with LCD Color Monitor		$2,445
☐	3rd Eye Double Camera with LCD Color Monitor (Cameras on T/G & LH Cab)		$3,767
☐	3rd Eye Double Camera with LCD Color Monitor (Cameras on T/G & RH Cab)		$3,767
☐	3rd Eye Double Camera with LCD Color Monitor (Cameras on T/G & RH Alley)		$3,767
	Auxiliary Axles and Tires		
* NOTE: All axles MUST BE installed with tires so chassis can be re-certified to new GAWR and GVWR ratings			
☐	Watson & Chalin Self Steering Pusher Axle: 13,000 pound capacity, hub piloted or 20" spoke wheel hubs, automatic slack adjusters, type 16 air chambers, steering stabilizer kit and reverse lift kit		$13,595
☐	Watson & Chalin Self Steering Tag Axle: 13,000 pound capacity, hub piloted or 20" spoke wheel hubs, automatic slack adjusters, type 16 air chambers, steering stabilizer kit and reverse lift kit		$13,595
☐	Watson & Chalin Rigid Pusher Axle: 25,000 pound capacity, hub piloted or 20" spoke wheel hubs, 30/30 brake chambers, automatic slack adjusters, 1,300 cubic inch air tank and regulator kit		$10,415
☐	Watson & Chalin Rigid Tag Axle: 25,000 pound capacity, hub piloted or 20" spoke wheel hubs, 30/30 brake chambers, automatic slack adjusters, 1,300 cubic inch air tank and regulator kit		$10,415
☐	Tag Axle Spill Shield - Prevents debris from collecting on the tag axle		$300
☐	255/70R-22.5 - Qty(2) load range H, 5,510 pound single max load at 120 psi with rims		$2,155
☐	275/70R-22.5 - Qty(2) load range H, 7,000 pound single max load at 120 psi with rims		$2,725
☐	11 R-22.5 - Qty(2) load range H, 6,610 pound single max load at 120 psi with rims		$2,295
* Note: All auxiliary applications must be approved by Heil prior to order acceptance			
	Body Options		
☐	Sliding Top Door - Composite - May not be compatible with roof mounted CNG system	B28	$4,665
☐	Roof Access Ladder - Aluminum		$1,375
☐	High Pressure Filter Kit	B3	STD
☐	High Pressure Filter Monitor		$645
☐	Second 20 lb. Fire Extinguisher		$477
☐	Tool Box Bumper Mount - Steel	B6	$735
☐	Tool Box Bumper Mount - Aluminum		$870
☐	Rear Caution Decal		$275
☐	Wheel Chock Kit - Dual		$155
☐	Fall Protection Kit		$3,270
☐	D-Ring Fall Protection		$795
☐	Hydraulic Oil Tank Quick Disconnect Kit - For use with filter buggy		$785
☐	Perma Coat on Cab Protector		$565
☐	Extendable Broom Kit - mounted in arm tube		$395
☐	Spill Kit		$325
☐	Packer Mounted Retainer Teeth		$695
☐	Hydraulic Oil Tank Heater - 500 watts		$1,140
☐	Fender Extension Kit		$695
☐	California Back Up Alarm		$650
☐	Infinity Series Packer/Eject Cylinders with scrapers and hardened rods to 50 HRC by Rosenboom - Includes Five (5) Year Packer/Eject Cylinder Warranty covering dents and dings		$2,935

Effective January,1,2016 Freedom Odyssey Residential Sales Order Form

	CNrG Tailgate Mounted CNG - Includes Installation Fee		
☐	60 DGE CNG System		$38,855
☐	75 DGE CNG System		$40,475
☐	90 DGE CNG System		$46,008
☐	105 DGE CNG System		$52,548
	CNrG Options		
☐	Front Bumper Fill with Kill Cap		$1,200
☐	Fast Fill Fuel Management Option		$1,800
☐	Defuel Transfer Hose - 35 ft.		$1,915
	CNG Installation - Top of Body Installation		
☐	CNG Installation Charge - Includes brackets, temporary tank rental, hardware, and mounting of CNG system		$5,405
	Extended Warranty		
☐	Five (5) Year (Maximum 10,000 hrs. of Operation) All other Non-Infinity Cylinder Warranty - Requires purchase of Infinity packer or eject Cylinders from above		$2,935
	Paint Options		
	NOTE: LIST PAINT CODES ON PAINT DIAGRAM		
☐	Customized Paint Color - Paint Color Code NOT included in the Color Smart Brochure		$375
☐	Two Tone Paint		$1,430
☐	Paint Striping - first stripe		$1,200
☐	Paint Striping - each additional stripe		$670
☐	Metallic Paint		$1,200
☐	Clear coat Finish		$1,670
☐	Anti-Graffiti Clear coat Finish		$2,400
☐	Prime Paint Only - deduct		($1,220)
	TOTALS		
	Total from Options Above (MSRP)		**$0**
	Additional Options (SOARs, Chassis Mods, Etc.) Total		
	Subtotal		**$0**
	Dealer Discount (%)	**0%**	**$0**
	Dealer Net Price		**$0**
	Additional Discount (SPR)		
	Freight		
	Total Price per Unit		**$0**

FREEDOM ODYSSEY RESIDENTIAL

Paint Stripe & Accessories Requirements

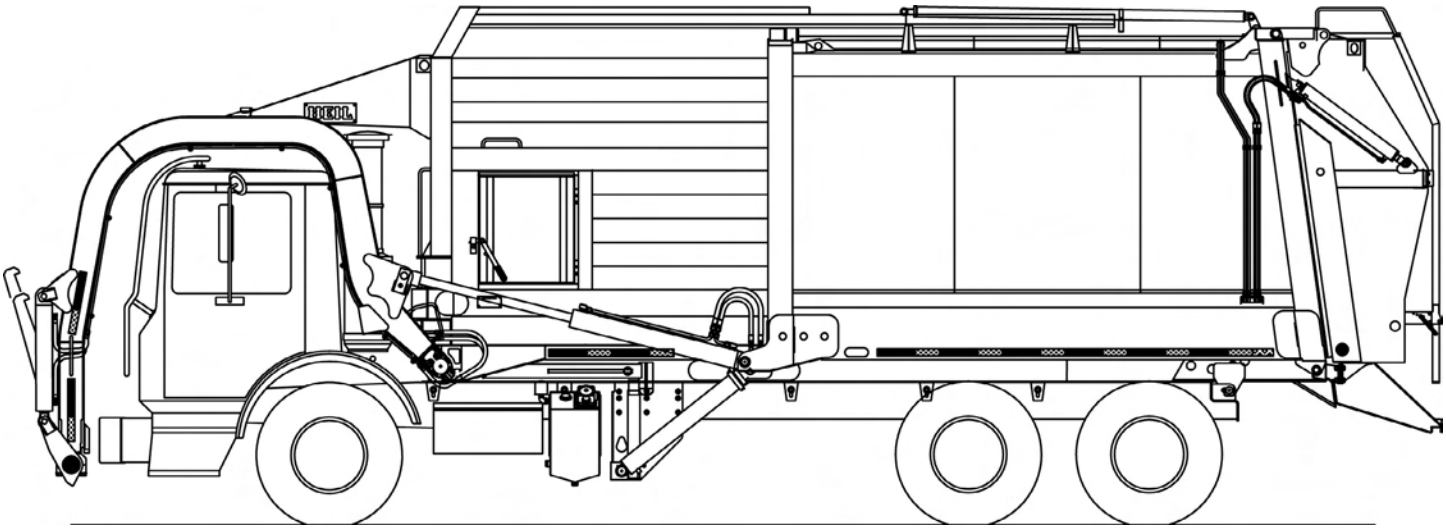

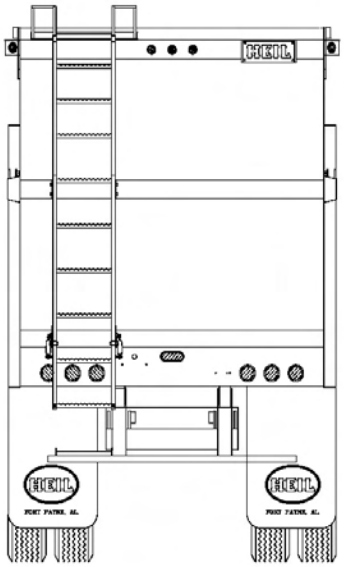

PAINT AND OPTIONS LAYOUT DETAIL
USE THIS FORM TO DESCRIBE PAINT SCHEMES
BE SPECIFIC ABOUT DIMENSIONS AND DETAILS

Sales Order #		Submitted by	
Customer			
Paint Color and Code 1			
Paint Color and Code 2			
Paint Color and Code 3			
Chassis Make			
Chassis Model			
Wheelbase			
Body Size		Approved by	

Half/Pack® Odyssey ™ Commercial

High Compaction Commercial Front Loader

Standard Equipment Features included in Base Price

- Heavy-duty sliding top door
- Hinged left-side aluminum body access door w ith step and grab
- Cab shield w ith hinged rubber tip extension - steel
- Front head closure screen w ith splash guard
- Upper hopper liquid sump w ith 2 clean-out doors
- Body service props for service hoist models and service lift
- Tailgate service props
- Fully automatic Shur-Lock™ tailgate latches
- Patented clamp-on arms
- 8,000 lb. capacity arms - WASTEC WRP 06-1996 rated
- Four arm shaft bearing supports
- Fork cross shaft-rubber bumpers
- Bolt-on rubber arm stops
- Heavy-duty forks - 1 1/2" thick x 59" grip length
- PTO Mounted Load Sense Piston Pump
- Chrome-plated cylinder rods and telescopic sleeves
- Crossed packing cylinders
- Chassis frame-mounted oil tank w ith level/temperature gauge and suction shut-offf valve
- 3-micron return line filter w ith magnetic trap and in-cab filter bypass monitor
- 100-micron suction line strainer
- Fabric guard hose preotection for all high-pressure hoses
- Cortex Controller™ with InSight™ diagnostic display
- Throttle advance kit
- Left hand single joystick ~~Operation)~~
- Complete array of in-cab function indicator lights
- Streetw ise Hydraulics™
- Solid state control panel
- High pressure filter kit
- Arm rest for operator controls
- 5 lb. In-Cab Fire Extinguisher
- Backup alarm
- Backup and license plate light
- LED center-mounted brake light
- LED duplicate high and low mount stop, turn, and tail lights
- LED mid-body turn signals
- Strobe light, amber mounted on low er tailgate - in-cab sw itch, pump on, and reverse activated
- Front and rear mud flaps - anti-sail/anti-splash
- Rear underride guard
- Hopper flood light
- Low oil level sensor w ith light; buzzer, and pump shut-off
- Shovel kit mounted on back of the packer
- Severe-duty w ear bar kit
- 3" sump drain on street side and curb side
- Remote tailgate hinge lube
- Arm/Fork over height w arning kit
- 20 lb. Fire Extinguisher
- FMVSS #108 clearance lights and reflectors
- ICC reflective tape
- Rear camera bracket and flood lights - reverse activated
- Body undercoating
- Customer's choice of one color finish paint from ColorSmart brochure
- Standard 1-year w arranty (up to 2,000 Hours of
- ANSI Z 245.1-2012 Compliant
- Safety Triangle
- Cavity coat and join sealer
- Arm guides mounted to front bumper
- Upper arm reinforcement

Effective January,1,2016 HP Odyssey Commercial Sales Order Form

Base Units HP Odyssey Commercial			
☐	20 cubic yard - Not available with CNrG		$120,229
	☐ Serviceable EJECT ☐ Service Hoist		
☐	23 cubic yard		$119,707
	☐ Serviceable EJECT ☐ Service Hoist		
☐	28 cubic yard		$120,329
	☐ Serviceable EJECT ☐ Service Hoist		
☐	32 cubic yard		$123,604
	☐ Serviceable EJECT ☐ Service Hoist		
☐	Service Hoist Kit - 187" Wheelbase 5 Axle Units WILL NOT accept the service hoist option*	B9	$4,215
	*5 Axle 187" Wheelbase - Hendrickson Auxiliary Axles Only with 275/R70/22.5 or smaller tires.		
Hopper Size			12 yd³
CHASSIS MUST COMFORM WITH HEIL'S MOST CURRENT CHASSIS SPECIFICATIONS AT WWW.HEIL.COM			
* NOTE: Red numbers reference Option Photo Index			
Mounting Options			
☐	Full Factory Mount for Service Hoist or Serviceable Eject - Includes Body Props and Rear Pivot		$5,290
☐	Mount at Dealer Destination		$705
Power Take Off / Pump Options			
☐	PTO Mounted Load Sense Piston pump - Includes PTO		STD
Control Options			
☐	Throttle Limit Kit		$405
☐	Left Hand 2-Lever Electric Control in lieu of Single Axis Joystick	CE6	$515
☐	Left Hand Single Axis Joystick Electric Control in lieu of Multifunction Joystick		STD
☐	Outside Electric Rocker Switch Controls Kit (arms, forks and packer) with Throttle Advance	CE5	$2,245
Lighting and Electrical Accessories			
☐	Dual LED Container Work Lights - in-cab switch		$565
☐	Peterson Multi-Function (SMART) LED Strobe / Turn Lamps		$585
☐	Body Side Backing Assist Lights - LED		$485
☐	Dual Oval Flat LED Strobes Mounted Mid-T/G - in-cab switch, pump on, and reverse activated	L15	$1,015
☐	Dual Cab Guard Mounted Flood Lights		$477
☐	Dual LED Cab Mounted Oval Strobe Lights		$695
Camera Systems			
All camera systems are mounted with protective camera brackets and twin tailgate flood lights.			
CAMERA MONITOR LOCATION WILL BE CAB ROOF MOUNTED Swivel monitor bracket will be provided for dual drive chassis			
360 ˚ Camera Systems and Options			
☐	360 Degree Camera Package - Includes 360 degree camera system (4 camera), DVR capability, Dash Camera, Operator Facing Camera, and Hopper Camera.		$9,863
☐	360 Base Camera System - Includes 360 (4 Camera System) for Monitoring Only		$8,113
☐	Add DVR for Recording Function - Includes Dash Camera for Road Facing View		$1,613
☐	Add Operator Facing Camera for Operator Monitoring		$369
☐	Add Hopper Camera		$994
3rd Eye Camera Systems			
☐	3rd Eye Single Camera with LCD Color Monitor		$2,445
☐	3rd Eye Double Camera with LCD Color Monitor (Cameras on T/G & LH Cab)		$3,767
☐	3rd Eye Double Camera with LCD Color Monitor (Cameras on T/G & RH Cab)		$3,767
☐	3rd Eye Double Camera with LCD Color Monitor (Cameras on T/G & RH Alley)		$3,767
Load Cell Scale Systems			
☐	Heil Optimum Payload System (HOPS) using Air-Weigh Axle Scales	CE20	$8,400
☐	Air-Weigh Axle Scale System without Interlock	CE20	$7,836

Effective January,1,2016 HP Odyssey Commercial Sales Order Form

	Auxiliary Axles and Tires		
	* NOTE: All axles MUST BE installed with tires so chassis can be re-certified to new GAWR and GVWR ratings		
☐	Watson & Chalin Self Steering Pusher Axle: 13,000 pound capacity, hub piloted or 20" spoke wheel hubs, automatic slack adjusters, type 16 air chambers, steering stabilizer kit and reverse lift kit -		$13,595
☐	Watson & Chalin Self Steering Tag Axle: 13,000 pound capacity, hub piloted or 20" spoke wheel hubs, automatic slack adjusters, type 16 air chambers, steering stabilizer kit and reverse lift kit		$13,595
☐	Watson & Chalin Rigid Pusher Axle: 25,000 pound capacity, hub piloted or 20" spoke wheel hubs, 30/30 brake chambers, automatic slack adjusters, 1,300 cubic inch air tank and regulator kit		$10,415
☐	Watson & Chalin Rigid Tag Axle: 25,000 pound capacity, hub piloted or 20" spoke wheel hubs, 30/30 brake chambers, automatic slack adjusters, 1,300 cubic inch air tank and regulator kit		$10,415
☐	Tag Axle Spill Shield - Prevents debris from collecting on the tag axle		$300
☐	255/70R-22.5 - Qty(2) load range H, 5,510 pound single max load at 120 psi with rims		$2,155
☐	275/70R-22.5 - Qty(2) load range H, 7,000 pound single max load at 120 psi with rims		$2,725
☐	11 R-22.5 - Qty(2) load range H, 6,610 pound single max load at 120 psi with rims		$2,295
	* Note: All auxiliary applications must be approved by Heil prior to order acceptance		
	Body Options		
☐	Roof Access Ladder		$1,295
☐	Hopper Floor Liner (3/16" - AR400)		$1,727
☐	Hopper Floor Liner (1/4" - AR400)		$2,745
☐	Body Roof Retainer Teeth - 2 rows at front of body - Minimizes springback in cardboard and recycling applications	B26	$1,000
☐	High Pressure Filter Kit	B3	STD
☐	High Pressure Filter Monitor		$645
☐	Second 20 lb. Fire Extinguisher		$477
☐	Tool Box Bumper Mount - Steel	B6	$735
☐	Tool Box Bumper Mount - Aluminum		$870
☐	Cab Protector Extension Raise - Manual Jack		$1,095
☐	Rear Caution Decal		$275
☐	Wheel Chock Kit - Dual		$155
☐	Fall Protection Kit		$3,270
☐	D-Ring Fall Protection		$795
☐	Hydraulic Oil Tank Quick Disconnect Kit - For use with filter buggy		$785
☐	Perma Coat on Cab Protector		$565
☐	Hydraulic Raise Cab Protector Kit		$5,125
☐	Extendable Broom Kit - mounted in arm tube		$395
☐	Spill Kit		$325
☐	Packer Mounted Retainer Teeth		$695
☐	Hydraulic Oil Tank Heater - 500 watts		$1,140
☐	Fender Extension Kit		$695
☐	California Back Up Alarm		$650
☐	Infinity Series Packer/Eject Cylinders with scrapers and hardened rods to 50 HRC by Rosenboom - Includes Five (5) Year Packer/Eject Cylinder Warranty covering dents and dings		$2,935
	CNrG Tailgate Mounted CNG - Includes Installation Fee		
☐	60 DGE CNG System		$38,855
☐	75 DGE CNG System		$40,475
☐	90 DGE CNG System		$46,008
☐	105 DGE CNG System		$52,548

Effective January,1,2016 HP Odyssey Commercial Sales Order Form

CNrG Options			
☐	Front Bumper Fill with Kill Cap		$1,200
☐	Fast Fill Fuel Management Option		$1,800
☐	Defuel Transfer Hose - 35 ft.		$1,915
CNG Installation - Top of Body Installation			
☐	CNG Installation Charge - Includes brackets, temporary tank rental, hardware, and mounting of CNG system		$5,405
Extended Warranty			
☐	Five (5) Year (Maximum 10,000 hrs. of Operation) All other Non-Infinity Cylinder Warranty - Requires purchase of Infinity packer or eject Cylinders from above		$2,935
Paint Options			
NOTE: LIST PAINT CODES ON PAINT DIAGRAM			
☐	Customized Paint Color - Paint Color Code NOT included in the Color Smart Brochure		$375
☐	Two Tone Paint		$1,430
☐	Paint Striping - first stripe		$1,200
☐	Paint Striping - each additional stripe		$670
☐	Metallic Paint		$1,200
☐	Clear coat Finish		$1,670
☐	Anti-Graffiti Clear coat Finish		$2,400
☐	Prime Paint Only - deduct		($1,220)
TOTALS			
	Total from Options Above (MSRP)		**$0**
	Additional Options (SOARs, Chassis Mods, Etc.) Total		
	Subtotal		**$0**
	Dealer Discount (%)	**0%**	**$0**
	Dealer Net Price		**$0**
	Additional Discount (SPR)		
	Freight		
	Total Price per Unit		**$0**

FREEDOM ODYSSEY COMMERCIAL

Paint Stripe & Accessories Requirements

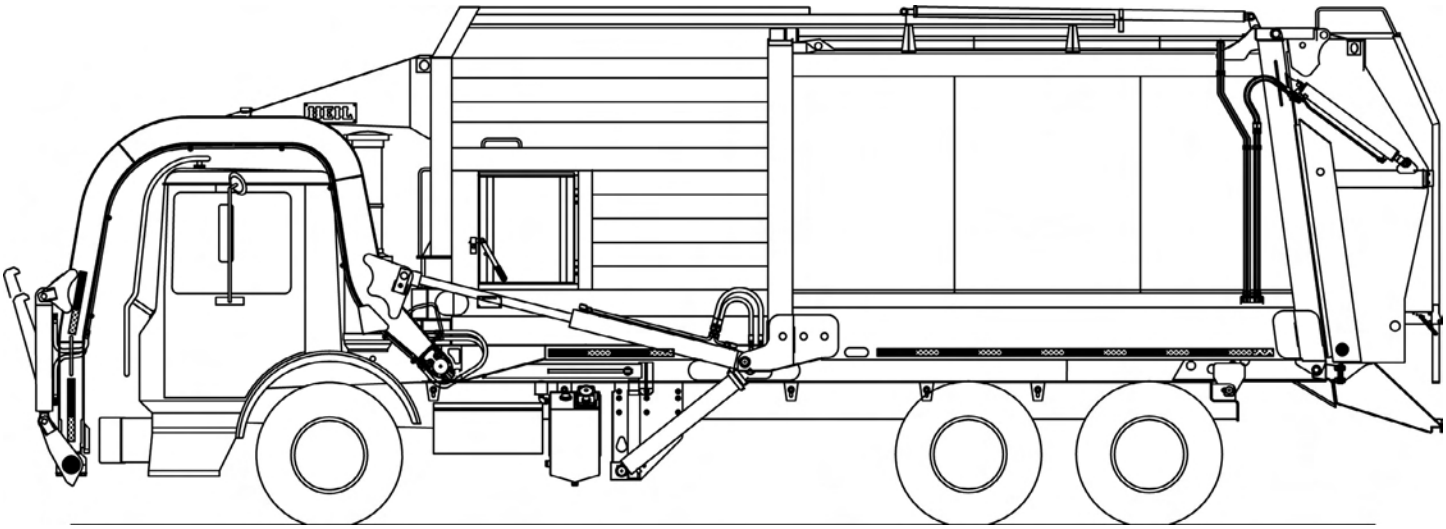

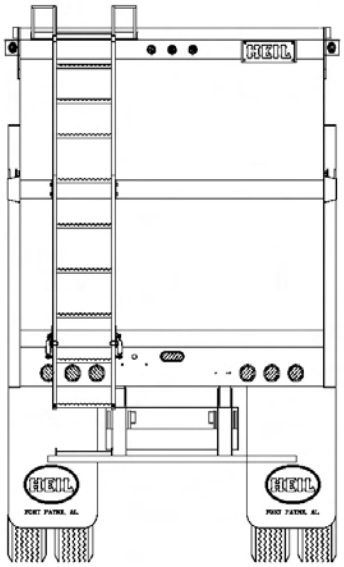

PAINT AND OPTIONS LAYOUT DETAIL
USE THIS FORM TO DESCRIBE PAINT SCHEMES
BE SPECIFIC ABOUT DIMENSIONS AND DETAILS

Sales Order #		Submitted by	
Customer			
Paint Color and Code 1			
Paint Color and Code 2			
Paint Color and Code 3			
Chassis Make			
Chassis Model			
Wheelbase			
Body Size		Approved by	

Sierra Odyssey ™ Commercial

Optimal Payload Commercial Front Loader

Standard Equipment Features included in Base Price

- Sliding top door
- Hinged left side body access door with step and grab
- Full aluminum cab shield with air cylinder assisted raise
- Under hopper liquid sump with 2 clean-out doors
- Body service props for service hoist models and service lift
- Tailgate service props
- Fully automatic Shur-Lock™ tailgate locks
- Patented clamp-on arms
- 8,000 lb. capacity arms - WASTEC WRP 06-1996 rated
- Four arm shaft bearing supports
- Fork cross shaft rubber bumpers
- Bolt-on rubber arm stops
- Heavy-duty forks - 1.5" thick x 59" grip length
- PTO Mounted load-sense piston pump
- Crossed packing cylinders
- Chrome-plated cylinder rods and telescopic sleeves
- Chassis frame-mounted aluminum oil tank with level / temperature gauge and suction shut-off valve
- 3-micron return line filter with magnetic trap and in-cab filter bypass monitor
- High pressure filter kit
- 100-micron suction line strainer
- Fabric guard hose protection for all high-pressure hoses
- Cortex Controller™ with InSight™ diagnostic display
- Throttle advance kit
- Left hand single joystick
- Complete array of in-cab function indicator lights
- 5 lb. In-Cab Fire Extinguisher
- Solid state control panel
- Streetwise Hydraulics™
- Backup Alarm
- Hopper Flood Light
- Low oil level sensor light, buzzer, and pump shut-off
- Severe-duty wear bar kit
- 3" sump drain on street side and curb side
- Remote packer lube kit
- Remote tailgate hinge lube kit
- Shovel kit mounted on back of the packer
- Arm / Fork over height warning kit
- Backup and license plate light
- LED center-mounted brake light
- LED duplicate high and low mount stop, turn, and tail lights
- LED mid-body turn signals
- Strobe light, amber mounted on lower tailgate - in-cab switch, pump on, and reverse activated
- Front and rear mud flaps - anti-sail / anti-splash
- Rear underride guard
- 20 lb. fire extinguisher
- FMVSS #108 clearance lights & reflectors
- ICC reflective tape
- Rear camera bracket and flood lights - reverse activated
- Body undercoating
- Customer's choice of one color finish paint from ColorSmart brochure
- Standard 1-year warranty (up to 2,000 Hours of Operation)
- ANSI Z 245.1-2012 Compliant
- Safety Triangle
- Cavity coat and joint sealer

Effective January,1,2016 Sierra Odyssey Commercial Sales Order Form

	Base Units Sierra Odyssey Commercial		
☐	28 cubic yard		$127,934
	☐ Serviceable EJECT ☐ Service Hoist		
☐	Service Hoist Kit - 187" Wheelbase 5 Axle Units WILL NOT accept the service hoist option*	B9	$4,215
	*5 Axle 187" Wheelbase - Hendrickson Auxiliary Axles Only with 275/R70/22.5 or smaller tires.		
Hopper Size			12 yd³
	CHASSIS MUST COMFORM WITH HEIL'S MOST CURRENT CHASSIS SPECIFICATIONS AT WWW.HEIL.COM		
	* NOTE: Red numbers reference Option Photo Index		
	Mounting Options		
☐	Full Factory Mount for Service Hoist or Serviceable Eject - Includes Body Props and Rear Pivot		$5,290
☐	Mount at Dealer Destination		$705
	Power Take Off / Pump Options		
☐	PTO Mounted Load Sense Piston pump - Includes PTO		STD
	Control Options		
☐	Throttle Limit Kit		$405
☐	Left Hand 2-Lever Electric Control in lieu of Single Axis Joystick	CE6	$515
☐	Left Hand Single Axis Joystick Electric Control in lieu of Multifunction Joystick		STD
☐	Outside Electric Rocker Switch Controls Kit (arms, forks and packer) with Throttle Advance	CE5	$2,245
	Lighting and Electrical Accessories		
☐	Dual LED Container Work Lights - in-cab switch		$565
☐	Peterson Multi-Function (SMART) LED Strobe / Turn Lamps		$585
☐	Body Side Backing Assist Lights - LED		$485
☐	Dual Oval Flat LED Strobes Mounted Mid-T/G - in-cab switch, pump on, and reverse activated	L15	$1,015
☐	Dual Cab Guard Mounted Flood Lights		$477
☐	Dual LED Cab Mounted Oval Strobe Lights		$695
	Camera Systems		
	All camera systems are mounted with protective camera brackets and twin tailgate flood lights.		
	CAMERA MONITOR LOCATION WILL BE CAB ROOF MOUNTED Swivel monitor bracket will be provided for dual drive chassis		
	360 ˚ Camera Systems and Options		
☐	360 Degree Camera Package - Includes 360 degree camera system (4 camera), DVR capability, Dash Camera, Operator Facing Camera, and Hopper Camera.		$9,863
☐	360 Base Camera System - Includes 360 (4 Camera System) for Monitoring Only		$8,113
☐	Add DVR for Recording Function - Includes Dash Camera for Road Facing View		$1,613
☐	Add Operator Facing Camera for Operator Monitoring		$369
☐	Add Hopper Camera		$994
	3rd Eye Camera Systems		
☐	3rd Eye Single Camera with LCD Color Monitor		$2,445
☐	3rd Eye Double Camera with LCD Color Monitor (Cameras on T/G & LH Cab)		$3,767
☐	3rd Eye Double Camera with LCD Color Monitor (Cameras on T/G & RH Cab)		$3,767
☐	3rd Eye Double Camera with LCD Color Monitor on T/G & RH Alley		$3,767
	Load Cell Scale Systems		
☐	Heil Optimum Payload System (HOPS) using Air-Weigh Axle Scales	CE20	$8,400
☐	Air-Weigh Axle Scale System without Interlock	CE20	$7,836

Effective January,1,2016 Sierra Odyssey Commercial Sales Order Form

	Auxiliary Axles and Tires		
	* NOTE: All axles MUST BE installed with tires so chassis can be re-certified to new GAWR and GVWR ratings		
☐	Watson & Chalin Self Steering Pusher Axle: 13,000 pound capacity, hub piloted or 20" spoke wheel hubs, automatic slack adjusters, type 16 air chambers, steering stabilizer kit and reverse lift kit -		$13,595
☐	Watson & Chalin Self Steering Tag Axle: 13,000 pound capacity, hub piloted or 20" spoke wheel hubs, automatic slack adjusters, type 16 air chambers, steering stabilizer kit and reverse lift kit		$13,595
☐	Watson & Chalin Rigid Pusher Axle: 25,000 pound capacity, hub piloted or 20" spoke wheel hubs, 30/30 brake chambers, automatic slack adjusters, 1,300 cubic inch air tank and regulator kit		$10,415
☐	Watson & Chalin Rigid Tag Axle: 25,000 pound capacity, hub piloted or 20" spoke wheel hubs, 30/30 brake chambers, automatic slack adjusters, 1,300 cubic inch air tank and regulator kit		$10,415
☐	Tag Axle Spill Shield - Prevents debris from collecting on the tag axle		$300
☐	255/70R-22.5 - Qty(2) load range H, 5,510 pound single max load at 120 psi with rims		$2,155
☐	275/70R-22.5 - Qty(2) load range H, 7,000 pound single max load at 120 psi with rims		$2,725
☐	11 R-22.5 - Qty(2) load range H, 6,610 pound single max load at 120 psi with rims		$2,295
	* Note: All auxiliary applications must be approved by Heil prior to order acceptance		
	Body Options		
☐	Sliding Top Door - May not be compatible with roof mounted CNG system		$3,685
☐	Roof Access Ladder		$1,295
☐	Hopper Floor Liner (3/16" - AR400)		$1,727
☐	Hopper Floor Liner (1/4" - AR400)		$2,745
☐	Body Roof Retainer Teeth - 2 rows at front of body - Minimizes springback in cardboard and recycling applications	B26	$1,000
☐	High Pressure Filter Kit	B3	STD
☐	High Pressure Filter Monitor		$645
☐	Second 20 lb. Fire Extinguisher		$477
☐	Tool Box Bumper Mount - Steel	B6	$735
☐	Tool Box Bumper Mount - Aluminum		$870
☐	Rear Caution Decal		$275
☐	Wheel Chock Kit - Dual		$155
☐	Fall Protection Kit		$3,270
☐	D-Ring Fall Protection		$795
☐	Hydraulic Oil Tank Quick Disconnect Kit - For use with filter buggy		$785
☐	Perma Coat on Cab Protector		$565
☐	Hydraulic Raise Cab Protector Kit - Will Receive Steel Cab Shield in Lieu of Aluminum		$5,125
☐	Extendable Broom Kit - mounted in arm tube		$395
☐	Spill Kit		$325
☐	Packer Mounted Retainer Teeth		$695
☐	Hydraulic Oil Tank Heater - 500 watts		$1,140
☐	Fender Extension Kit		$695
☐	California Back Up Alarm		$650
☐	Infinity Series Packer/Eject Cylinders with scrapers and hardened rods to 50 HRC by Rosenboom - Includes Five (5) Year Packer/Eject Cylinder Warranty covering dents and dings		$2,935

Effective January,1,2016 Sierra Odyssey Commercial Sales Order Form

	CNrG Tailgate Mounted CNG - Includes Installation Fee		
☐	60 DGE CNG System		$38,855
☐	75 DGE CNG System		$40,475
☐	90 DGE CNG System		$46,008
☐	105 DGE CNG System		$52,548
	CNrG Options		
☐	Front Bumper Fill with Kill Cap		$1,200
☐	Fast Fill Fuel Management Option		$1,800
☐	Defuel Transfer Hose - 35 ft.		$1,915
	CNG Installation - Top of Body Installation		
☐	CNG Installation Charge - Includes brackets, temporary tank rental, hardware, and mounting of CNG system		$5,405
	Extended Warranty		
☐	Five (5) Year (Maximum 10,000 hrs. of Operation) All other Non-Infinity Cylinder Warranty - Requires purchase of Infinity packer or eject Cylinders from above		$2,935
	Paint Options		
NOTE: LIST PAINT CODES ON PAINT DIAGRAM			
☐	Customized Paint Color - Paint Color Code NOT included in the Color Smart Brochure		$375
☐	Two Tone Paint		$1,430
☐	Paint Striping - first stripe		$1,200
☐	Paint Striping - each additional stripe		$670
☐	Metallic Paint		$1,200
☐	Clear coat Finish		$1,670
☐	Anti-Graffiti Clear coat Finish		$2,400
☐	Prime Paint Only - deduct		($1,220)
	TOTALS		
	Total from Options Above (MSRP)		**$0**
	Additional Options (SOARs, Chassis Mods, Etc.) Total		
	Subtotal		**$0**
	Dealer Discount (%)	**0%**	**$0**
	Dealer Net Price		**$0**
	Additional Discount (SPR)		
	Freight		
	Total Price per Unit		**$0**

SIERRA ODYSSEY COMMERCIAL

Paint Stripe & Accessories Requirements

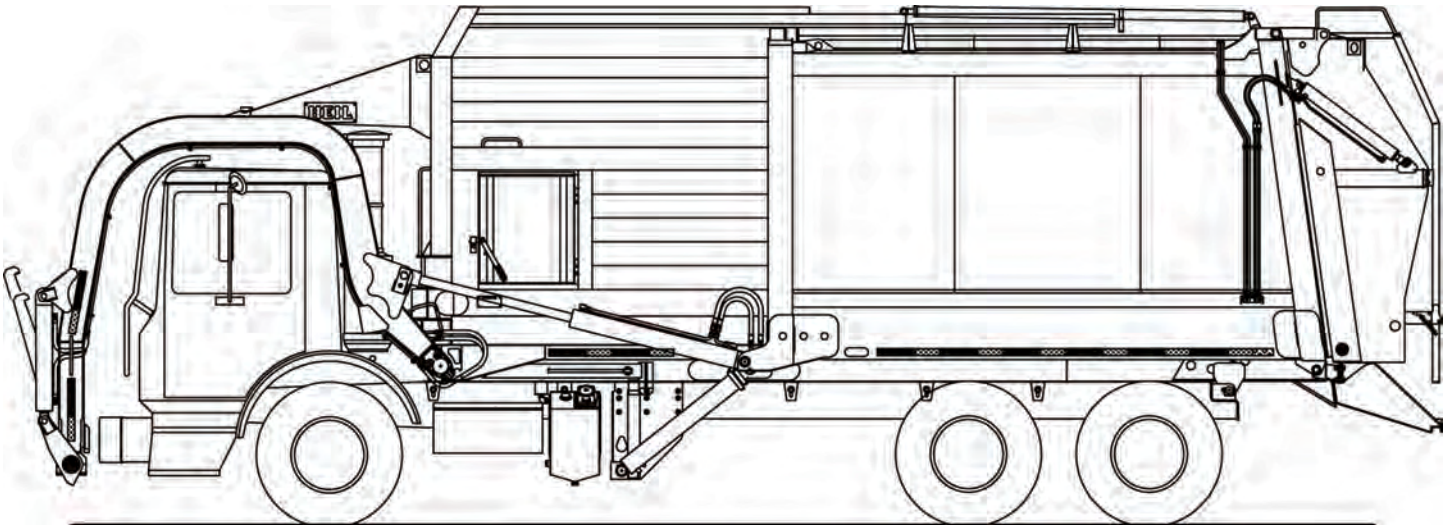

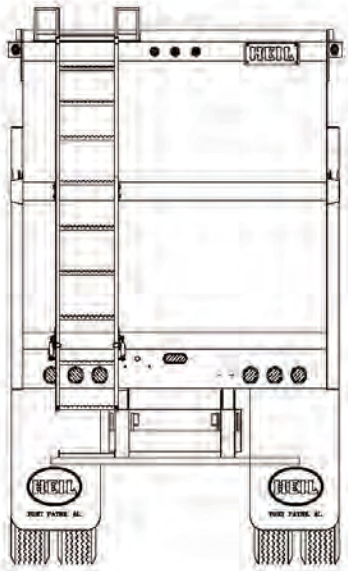

PAINT AND OPTIONS LAYOUT DETAIL
USE THIS FORM TO DESCRIBE PAINT SCHEMES
BE SPECIFIC ABOUT DIMENSIONS AND DETAILS

Sales Order #		Submitted by	
Customer			
Paint Color and Code 1			
Paint Color and Code 2			
Paint Color and Code 3			
Chassis Make			
Chassis Model			
Wheelbase			
Body Size		Approved by	

Freedom Odyssey ™ Commercial

High-Performance Optimal Payload Commercial Front Loader

Standard Equipment Features included in Base Price

- Sliding top door- composite
- Hinged left-side aluminum body access door with step and grab
- Full aluminum cab shield with air cylinder assisted raise
- 3" underbody gate valve on street side for liquid removal
- Front head closure screen with splash guard
- Body service props for service lift
- Tailgate service props
- Fully automatic Shur-Lock™ tailgate locks
- Patented clamp-on arms
- 8,000 lb. capacity arms - WASTEC WRP 06-1996 rated
- Four arm shaft bearing supports
- Bolt-on rubber arm stops
- Heavy-duty forks - 1.5" thick x 59" grip length
- PTO Mounted Load Sense Piston Pump
- Chrome-plated cylinder rods and telescopic sleeves
- Chassis frame-mounted aluminum oil tank with level / temperature gauge and suction shut-off valve
- 3-micron return line filter with magnetic trap and in-cab filter bypass monitor
- High pressure filter kit
- Heil Optimum Payload System - HOPS™
- 100-micron suction line strainer
- Fabric guard hose protection for all high-pressure hoses
- Cortex Controller™ with InSight™ diagnostic display
- Throttle advance kit
- Left hand single joystick
- Complete array of in-cab function indicator lights
- Arm rest for operator controls
- 5 lb. In-Cab Fire Extinguisher
- Solid state control panel
- Streetwise Hydraulics™
- Backup Alarm
- Hopper Flood Light
- Low oil level sensor light, buzzer, and pump shut-off
- Severe-duty wear bar kit
- Remote packer lube kit
- Remote tailgate hinge lube kit
- Shovel kit mounted on back of the packer
- Arm / Fork overweight warning kit
- Backup and license plate light
- LED center-mounted brake light
- LED duplicate high and low mount stop, turn, and tail lights
- LED mid-body turn signals
- Strobe light, amber mounted on lower tailgate - in-cab switch, pump on, and reverse activated
- Front and rear mud flaps - anti-sail / anti-splash
- Rear underride guard
- 20 lb. fire extinguisher
- FMVSS #108 clearance lights & reflectors
- ICC reflective tape
- Rear camera bracket and flood lights - reverse activated
- Body undercoating
- Customer's choice of one color finish paint from ColorSmart brochure
- Standard 1-year warranty (2,000 Hours of Operation)
- ANSI Z 245.1-2012 Compliant
- Safety Triangle
- Cavity coat and joint sealer

Effective January,1,2016 Freedom Odyssey Commercial Sales Order Form

Base Units Freedom Odyssey Commercial			
☐	20 cubic yard		$133,345
	☐ Serviceable EJECT ☐ Service Hoist		
☐	23 cubic yard		$132,835
	☐ Serviceable EJECT ☐ Service Hoist		
☐	28 cubic yard		$133,345
	☐ Serviceable EJECT ☐ Service Hoist		
☐	Service Hoist Kit - 187" Wheelbase 5 Axle Units WILL NOT accept the service hoist option*	B9	$4,215
	*5 Axle 187" Wheelbase - Hendrickson Auxiliary Axles Only with 275/R70/22.5 or smaller tires.		
Hopper Size			12 yd³
CHASSIS MUST COMFORM WITH HEIL'S MOST CURRENT CHASSIS SPECIFICATIONS AT WWW.HEIL.COM			
* NOTE: Red numbers reference Option Photo Index			
Mounting Options			
☐	Full Factory Mount for Service Hoist or Serviceable Eject - Includes Body Props and Rear Pivot		$5,290
☐	Mount at Dealer Destination		$705
Power Take Off / Pump Options			
☐	PTO Mounted Load Sense Piston pump - Includes PTO		STD
Control Options			
☐	Throttle Limit Kit		$405
☐	Left Hand 2-Lever Electric Control in lieu of Single Axis Joystick	CE6	STD
☐	Left Hand Single Axis Joystick Electric Control in lieu of Multifunction Joystick		$515
☐	Outside Electric Rocker Switch Controls Kit (arms, forks and packer) with Throttle Advance	CE5	$2,245
Lighting and Electrical Accessories			
☐	Dual LED Container Work Lights - in-cab switch		$565
☐	Peterson Multi-Function (SMART) LED Strobe / Turn Lamps		$585
☐	Body Side Backing Assist Lights - LED		$485
☐	Dual Oval Flat LED Strobes Mounted Mid-T/G - in-cab switch, pump on, and reverse activated	L15	$1,015
☐	Dual Cab Guard Mounted Flood Lights		$477
☐	Dual LED Cab Mounted Oval Strobe Lights		$695
Camera Systems			
All camera systems are mounted with protective camera brackets and twin tailgate flood lights			
CAMERA MONITOR LOCATION WILL BE CAB ROOF MOUNTED Swivel monitor bracket will be provided for dual drive chassis			
360 ° Camera Systems and Options			
☐	360 Degree Camera Package - Includes 360 degree camera system (4 camera), DVR capability, Dash Camera, Operator Facing Camera, and Hopper Camera.		$9,863
☐	360 Base Camera System - Includes 360 (4 Camera System) for Monitoring Only		$8,113
☐	Add DVR for Recording Function - Includes Dash Camera for Road Facing View		$1,613
☐	Add Operator Facing Camera for Operator Monitoring		$369
☐	Add Hopper Camera		$994
3rd Eye Camera Systems			
☐	3rd Eye Single Camera with LCD Color Monitor		$2,445
☐	3rd Eye Double Camera with LCD Color Monitor (Cameras on T/G & LH Cab)		$3,767
☐	3rd Eye Double Camera with LCD Color Monitor (Cameras on T/G & RH Cab)		$3,767
☐	3rd Eye Double Camera with LCD Color Monitor (Cameras on T/G & RH Alley)		$3,767

Effective January,1,2016 Freedom Odyssey Commercial Sales Order Form

	Auxiliary Axles and Tires		
	* NOTE: All axles MUST BE installed with tires so chassis can be re-certified to new GAWR and GVWR ratings		
☐	Watson & Chalin Self Steering Pusher Axle: 13,000 pound capacity, hub piloted or 20" spoke wheel hubs, automatic slack adjusters, type 16 air chambers, steering stabilizer kit and reverse lift kit		$13,595
☐	Watson & Chalin Self Steering Tag Axle: 13,000 pound capacity, hub piloted or 20" spoke wheel hubs, automatic slack adjusters, type 16 air chambers, steering stabilizer kit and reverse lift kit		$13,595
☐	Watson & Chalin Rigid Pusher Axle: 25,000 pound capacity, hub piloted or 20" spoke wheel hubs, 30/30 brake chambers, automatic slack adjusters, 1,300 cubic inch air tank and regulator kit		$10,415
☐	Watson & Chalin Rigid Tag Axle: 25,000 pound capacity, hub piloted or 20" spoke wheel hubs, 30/30 brake chambers, automatic slack adjusters, 1,300 cubic inch air tank and regulator kit		$10,415
☐	Tag Axle Spill Shield - Prevents debris from collecting on the tag axle		$300
☐	255/70R-22.5 - Qty(2) load range H, 5,510 pound single max load at 120 psi with rims		$2,155
☐	275/70R-22.5 - Qty(2) load range H, 7,000 pound single max load at 120 psi with rims		$2,725
☐	11 R-22.5 - Qty(2) load range H, 6,610 pound single max load at 120 psi with rims		$2,295
	* Note: All auxiliary applications must be approved by Heil prior to order acceptance		
	Body Options		
☐	Sliding Top Door - Composite - May not be compatible with roof mounted CNG system	B28	$4,665
☐	Roof Access Ladder - Aluminum		$1,375
☐	High Pressure Filter Kit	B3	STD
☐	High Pressure Filter Monitor		$645
☐	Second 20 lb. Fire Extinguisher		$477
☐	Tool Box Bumper Mount - Steel	B6	$735
☐	Tool Box Bumper Mount - Aluminum		$870
☐	Rear Caution Decal		$275
☐	Wheel Chock Kit - Dual		$155
☐	Fall Protection Kit		$3,270
☐	D-Ring Fall Protection		$795
☐	Hydraulic Oil Tank Quick Disconnect Kit - For use with filter buggy		$785
☐	Perma Coat on Cab Protector		$565
☐	Extendable Broom Kit - mounted in arm tube		$395
☐	Spill Kit		$325
☐	Packer Mounted Retainer Teeth		$695
☐	Hydraulic Oil Tank Heater - 500 watts		$1,140
☐	Fender Extension Kit		$695
☐	California Back Up Alarm		$650
☐	Infinity Series Packer/Eject Cylinders with scrapers and hardened rods to 50 HRC by Rosenboom - Includes Five (5) Year Packer/Eject Cylinder Warranty covering dents and dings		$2,935
	CNrG Tailgate Mounted CNG - Includes Installation Fee		
☐	60 DGE CNG System		$38,855
☐	75 DGE CNG System		$40,475
☐	90 DGE CNG System		$46,008
☐	105 DGE CNG System		$52,548
	CNrG Options		
☐	Front Bumper Fill with Kill Cap		$1,200
☐	Fast Fill Fuel Management Option		$1,800
☐	Defuel Transfer Hose - 35 ft.		$1,915

Effective January,1,2016 Freedom Odyssey Commercial Sales Order Form

CNG Installation - Top of Body Installation			
☐	CNG Installation Charge - Includes brackets, temporary tank rental, hardware, and mounting of CNG system		$5,405
Extended Warranty			
☐	Five (5) Year (Maximum 10,000 hrs. of Operation) All other Non-Infinity Cylinder Warranty - Requires purchase of Infinity packer or eject Cylinders from above		$2,935
Paint Options			
NOTE: LIST PAINT CODES ON PAINT DIAGRAM			
☐	Customized Paint Color - Paint Color Code NOT included in the Color Smart Brochure		$375
☐	Two Tone Paint		$1,430
☐	Paint Striping - first stripe		$1,200
☐	Paint Striping - each additional stripe		$670
☐	Metallic Paint		$1,200
☐	Clear coat Finish		$1,670
☐	Anti-Graffiti Clear coat Finish		$2,400
☐	Prime Paint Only - deduct		($1,220)
TOTALS			
	Total from Options Above (MSRP)		**$0**
	Additional Options (SOARs, Chassis Mods, Etc.) Total		
	Subtotal		**$0**
	Dealer Discount (%)	**0%**	**$0**
	Dealer Net Price		**$0**
	Additional Discount (SPR)		
	Freight		
	Total Price per Unit		**$0**

FREEDOM ODYSSEY COMMERCIAL

Paint Stripe & Accessories Requirements

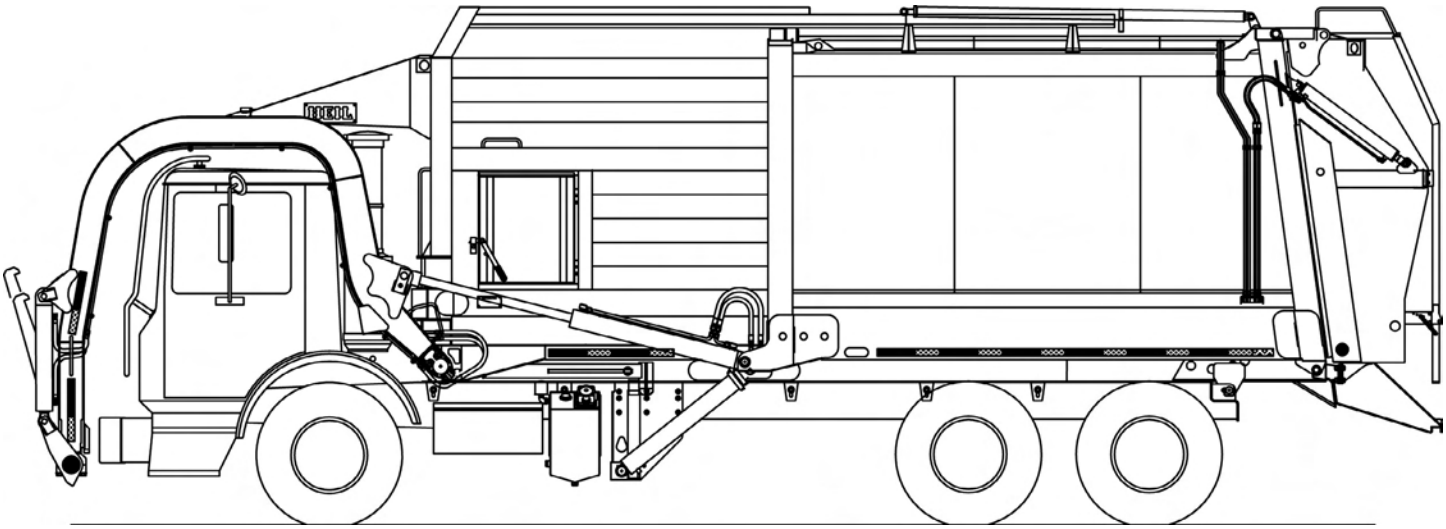

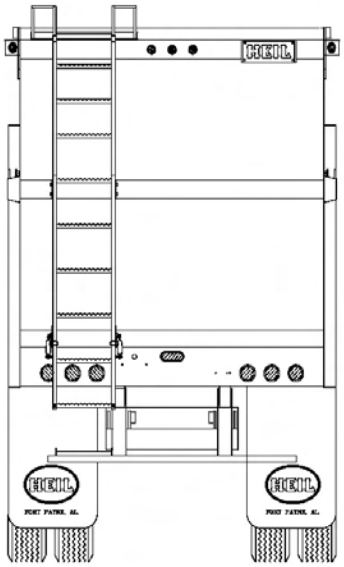

PAINT AND OPTIONS LAYOUT DETAIL
USE THIS FORM TO DESCRIBE PAINT SCHEMES
BE SPECIFIC ABOUT DIMENSIONS AND DETAILS

Sales Order #		Submitted by	
Customer			
Paint Color and Code 1			
Paint Color and Code 2			
Paint Color and Code 3			
Chassis Make			
Chassis Model			
Wheelbase			
Body Size		Approved by	

PT 1000™

High Performance Rear Loader

Standard Equipment Features included in Base Price

- 3.0 yd^3 hopper
- Smooth side body construction
- Bolt-on ANSI rear riding steps
- Tailgate service props
- Remote mount cast iron roller bearing gear pump (less PTO)
- Chrome-plated single stage cylinder rods
- Quick-change UHMW ejector slides
- Wide trak easy-change carrier slides
- Underbody mounted oil tank
- Level / temperature / sight gauge for hydraulic oil tank
- Oil suction shut-off valve
- 3-micron return line filter with magnetic trap and in-cab filter bypass monitor
- 100-micron suction line strainer
- Regenerative valve for fast packer and reload times
- Neutral safety switch for automatic transmissions only
- Right side buzzer controls
- Right side packer controls
- Backup alarm
- Backup and license plate light
- LED Center-mounted brake light
- LED Duplcate high and low mount stop, turn, and tail lights
- LED Mid-body turn signals
- Hinged left side body access door with step and grab
- LED FMVSS #108 clearance lights and reflectors
- ICC reflective tape
- Rear camera bracket and flood lights - reverse activated
- Body undercoating
- Customer's choice of one color finish paint from ColorSmart brochure
- Standard 1-year (2,000 hours of operation) warranty
- ANSI Z 245.1-2012 Compliant
- Cavity coat and joint sealer
- Chrome ejector cylinder
- 5 lb. In Cab Fire Extinguisher
- Safety Triangle

Effective January,1,2016 PT 1000 Sales Order Form

Base Units PT 1000 - EJECT ONLY			
☐	13 cubic yard		$51,316
☐	16 cubic yard		$53,009
☐	18 cubic yard		$54,432
☐	20 cubic yard		$56,110
☐	25 cubic yard		$59,267
Hopper Size			3.0 yd³
CHASSIS MUST COMFORM WITH HEIL'S MOST CURRENT CHASSIS SPECIFICATIONS FOUND AT WWW.HEIL.COM			
* NOTE: Red numbers reference Option Photo Index			
Mounting Options			
☐	Full Factory Mount		$2,160
☐	Semi-Mount - consists of frame cut-off, permanent mounting brackets and light electrical wiring only		$1,375
☐	Strap Mount - chassis must be suitable for temporary mount when received - Heil will connect lights and provide temporary mounting brackets		$790
☐	Mount at Dealer Destination		$705
Power Take Off / Pump Options			
☐	Remote Mount Gear Pump		STD
☐	Direct Mount Gear Pump - Not available on Mack Granite		$690
☐	Front Mount Vane Pump		$4,245
☐	Operate at Idle (OAI) Front Mount Tandem Vane Pump		$5,740
☐	Hot Shift PTO with Over speed Protection		$2,835
☐	Cable Shift PTO - manual shift transmission only		$1,015
☐	Air Shift PTO - manual shift transmission only		$1,220
☐	890 Hot Shift PTO with Gear Pump		$3,590
Certain transmission / chassis configurations may not have proper clearance to allow direct mount or live power systems driven off of the transmission			
Lighting and Electrical Accessories			
☐	Hopper Work Light Kit - switch on tailgate	L1	$335
☐	Hopper Work Light Kit - switch in cab	L1	$335
☐	Dual Hopper Work Light Kit - two lights - switch on tailgate	L9	$450
☐	Dual Hopper Work Light Kit - two lights - switch in cab	L9	$450
☐	Dual Work Lights Outside of Hopper		$450
☐	Body Side Backing Assist Lights - reverse activated	L3	$485
☐	Peterson Multi-Function (SMART) LED Strobe / Turn Lamps - includes LED light package for entire unit	L10	$585
☐	Municipal Lights with Dual 7" Amber LEDs	L2	$1,385
☐	Strobe Light, Amber - upper LH corner of tailgate - in-cab switch	L4	$645
☐	Dual Strobe Lights, Amber - upper LH & RH on tailgate - in-cab switch	L14	$930
☐	Strobe Light, Amber - mounted left- center, front of body - in-cab switch	L4	$645
☐	Dual Front LED Oval Strobe Lights, Amber - in-cab switch		$740
☐	Dual Rear LED Oval Strobe Lights, Amber - in-cab switch		$740
☐	Left Hand Buzzer Kit	CE1	$165
When equipped with dual cart tippers, only upper Peterson lamps will be provided			
Container Handling / Cart Tipper Options			
☐	12,000 Pound Line Pull Drum Winch with Control Kit - Not available on 13yd Unit	MG9	$5,610
☐	15,000 Pound Line Pull Reeving Cylinder with Control Kit - Not available on 13yd Unit	MG3	$6,226
☐	Adjustable Roll Bar with Control Kit	MG4	$3,810
All of the above mechanisms require the latch kit below			
☐	Lip and Latch Kit - to suit application without cart tipper(s)		$1,230
☐	Lip and Latch Kit - to suit application with cart tipper(s)		$1,260
	☐ Single Tipper Center Mounted ☐ Single Tipper Offset to Curbside [☐ Tipper		
☐	Single Control Valve Section with Control Handle	MG2	$1,275
☐	Double Control Valve Section with Control Handles	MG2	$1,950
☐	Single Cart Tipper Control Valve, Handle, Plumbing and Hose Kit	MG2	$1,910
☐	Dual Cart Tipper Control Valve, Handle, Plumbing and Hose Kit	MG2	$3,100
☐	Bayne Cart Tipper - Specify Model - Includes Controls, Valves, Plumbing, and Installation		See Bayne
☐	Customer Installed Single Cart Tipper Kit - Bayne Bracket, Control Valve, Handle, Plumbing and Hose Kit	MG1	$2,235
☐	Customer Installed Double Cart Tipper Kit - Bayne Bracket, Control Valve, Handle, Plumbing and Hose Kit	MG1	$3,420
	Specify Brand and Model		
CUSTOMER SUPPLIED CART TIPPERS ARE NOT ADMISSIBLE			

Effective January,1,2016 PT 1000 Sales Order Form

Body Options			
☐	Hopper Floor Kit (1/4" - 150,000 psi in lieu of 3/16" 150,000 psi)		$876
☐	Hopper Floor Overlay Kit (3/16" - 150,000 psi)		$1,320
☐	Heavy Duty Hopper Overlay Package 3/16" Hopper Bottom and Side liners		$2,235
☐	1/4" Body Floor Kit		$1,640
☐	Body Front Head Closure Kit	B22	$310
☐	Hydraulic Pressure Gauge Kit (shipped loose in cab)	B2	$295
☐	High Pressure Filter Kit	B3	$866
☐	60 Gallon Washout Tank - side mounted	B10	$1,945
☐	20 lb. Fire Extinguisher with Bracket	B4	$477
☐	Tool Box (18" x 18" x 36") - frame mounted	B5	$780
☐	Tool Box (18" x 18" x 24") - frame mounted	B5	$735
☐	Broom and Shovel Rack - mounted on tailgate	B15	$205
☐	Mud Flaps - anti-sail / anti-splash - mounted ahead of rear tires	B7	$215
☐	Mud Flaps - anti-sail / anti-splash - tailgate mounted behind rear tires	B7	$300
☐	Mud Guards - steel - mounted ahead of rear tires	B8	$315
☐	5 Gallon Cooler and Bracket - frame mounted	B12	$335
☐	Side Door Interlock Kit - shuts down pump when open (requires Hot Shift PTO or Front mount pump)		$500
☐	Return Line Check Valve Kit	B11	$485
☐	Spill Kit - In Cab		$325
☐	Spill Kit - Front of Body		$325
☐	Extended Tailgate Seal		$300
☐	Automatic Hydraulic Tailgate Locks		$3,670
☐	Anti-Back Pack Valve Kit		$910
☐	California Back Up Alarm		$645
☐	Hydraulic Oil Tank Quick Disconnect Kit - For use with filter buggy		$785
Organics Package Options			
☐	Extended Tailgate Seal - Same as above		$300
☐	Side door kit with seal		$1,050
☐	Front head splash cover kit		$490
☐	Lip extension kit		$775
☐	Automatic Hydraulic Tailgate Locks - same as above		$3,670
☐	Front head oil tank kit (Not allowed with Front of Body CNG)		$1,450
☐	Hopper side drain kit		$310
☐	Tailgate side seal		$570
☐	Top of body seal		$255
Camera Systems			
All camera systems are mounted with protective camera brackets and twin tailgate flood lights			
CAMERA MONITOR LOCATION WILL BE CAB ROOF MOUNTED			
Swivel monitor bracket will be provided for dual drive chassis			
360 ° Camera Systems and Options			
☐	360 Degree Camera Package - Includes 360 degree camera system (4 camera), DVR capability, Dash Camera, Operator Facing Camera, and Hopper Camera.		$8,979
☐	360 Base Camera System - Includes 360 (4 Camera System) for Monitoring Only		$8,113
☐	Add DVR for Recording Function - Includes Dash Camera for Road Facing View		$1,613
☐	Add Operator Facing Camera for Operator Monitoring		$369
☐	Add Hopper Camera		$994
	3rd Eye Camera System		
☐	3rd Eye Single Camera with LCD Color Monitor		$2,445
☐	3rd Eye Double Camera with LCD Color Monitor		$3,767
☐	3rd Eye Triple Camera with LCD Color Monitor		$5,030
	Camera 1 Location - Mounted on Tailgate Facing Rear		
	Camera 2 Location - Choose: ☐ Left Hand Side Cab - ☐ Right Hand Side Cab		
	Camera 3 Location - Choose: ☐ Left Hand Side Cab - ☐ Right Hand Side Cab		
Load Cell Scale Systems			
☐	Heil Optimum Payload System (HOPS) using Air-Weigh Axle Scales	CE20	$8,400
☐	Air-Weigh Axle Scale System without Interlock	CE20	$7,836
Auxiliary Axles and Tires			
* NOTE: All axles MUST BE installed with tires so chassis can be re-certified to new GAWR and GVWR ratings			
☐	Watson & Chalin Rigid Axle: 25,000 pound capacity, hub piloted or 20" spoke wheel hubs, 30/30 brake chambers, automatic slack adjusters, 1,300 cubic inch air tank and regulator kit - for pusher applications		$10,415
☐	255/70R-22.5 - load range H, 5,510 pound single max load at 120 psi with rim - 2 tires installed		$2,155
☐	275/70R-22.5 - load range H, 7,000 pound single max load at 120 psi with rim - 2 tires installed		$2,725
☐	11 R-22.5 - load range H, 6,610 pound single max load at 120 psi with rim - 2 tires installed		$2,295
* Note: All auxiliary applications must be approved by Heil prior to order acceptance			
CNG Installation - Top of Body Installation			
☐	CNG Installation Charge - Includes brackets, hardware, and mounting of CNG system		$5,405

Effective January,1,2016 PT 1000 Sales Order Form

Extended Warranty			
☐	Five (5) Year (Maximum 10,000 hrs. of Operation) Cylinder Warranty		$3,300
Paint Options			
NOTE: LIST PAINT CODES ON PAINT DIAGRAM			
☐	Customized Paint Color - Paint Color Code NOT included in the Color Smart Brochure		$375
☐	Two Tone Paint		$1,430
☐	Paint Striping - first stripe		$1,200
☐	Paint Striping - each additional stripe		$670
☐	Metallic Paint		$1,200
☐	Clear coat Finish		$1,670
☐	Anti-Graffiti Clear coat Finish		$2,400
☐	Prime Paint Only - deduct		($969)
TOTALS			
	Total from Options Above (MSRP)		**$0**
	Additional Options (SOARs, Chassis Mods, Etc.) Total		
	Subtotal		**$0**
	Dealer Discount (%)	**0%**	**$0**
	Dealer Net Price		**$0**
	Additional Discount (SPR)		
	Freight		
	Total Price per Unit		**$0**

PT 1000™

Paint Stripe & Accessories Requirements

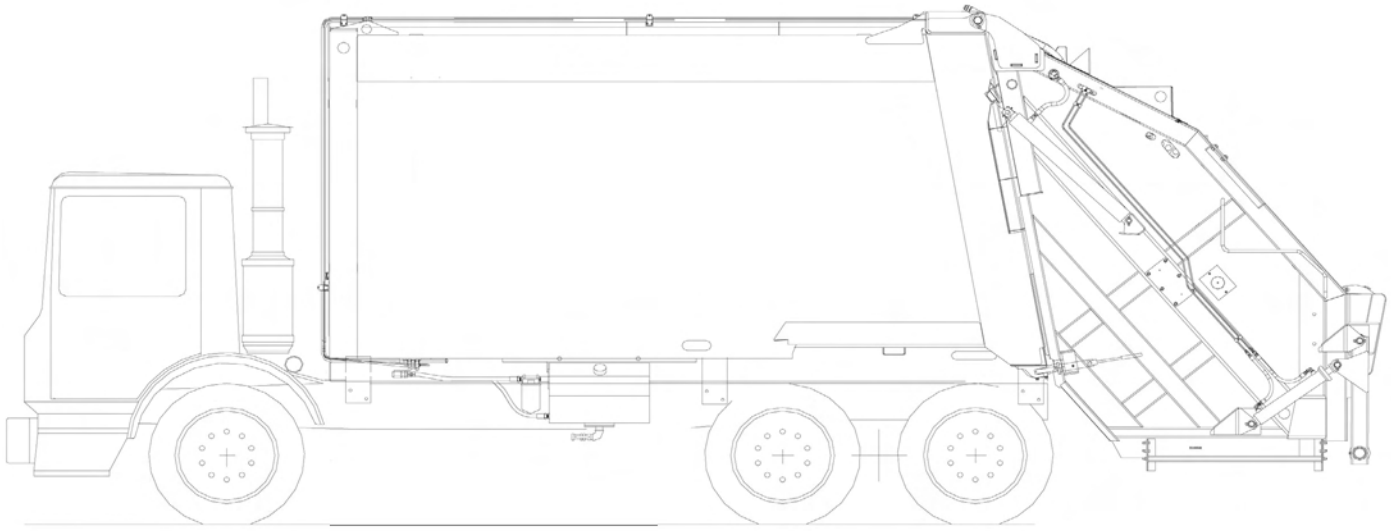

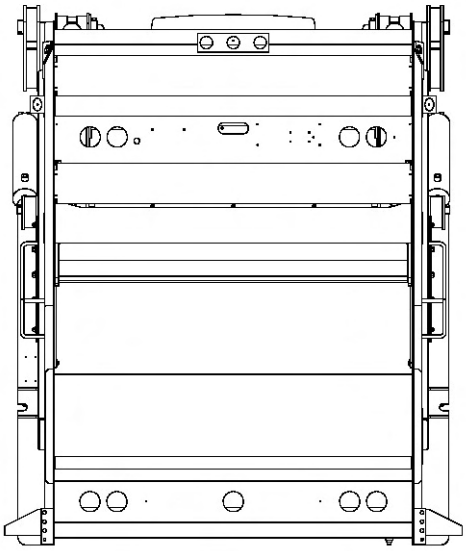

Paint and options layout detail
Use this form to describe paint schemes
Be specific about dimensions and details

Sales Order #		Submitted by	
Customer			
Paint Color 1			
Paint Color 2			
Paint Color 3			
Chassis Make			
Chassis Model			
Wheelbase			
Body Size		Approved by	

DuraPack® 5000

High Compaction Rear Loader

Standard Equipment Features included in Base Price

- 3.94 yd^3 hopper
- Smooth side body construction
- Extra-duty 80,000 psi body
- Bolt-on ANSI rear riding steps
- Tailgate service props
- Remote mount cast iron roller bearing gear pump (less PTO)
- Chrome-plated cylinder rods
- Chrome-plated ejector cylinder sleeves
- Underbody mounted oil tank
- Level/temperature/sight gauge for hydraulic oil tank
- Oil suction shut-off valve
- 3-micron return line filter w ith magenetic trap and in-cab filter bypass monitor
- 100-micron suction line strainer
- Regenerative valve for fast packer and reload times
- Neutral safety sw itch for automatic transmissions only
- Right side buzzer controls
- Right side packer controls
- Backup alarm
- Backup and license plate light
- LED Center-mounted brake light
- LED Duplicate high and low mount stop, turn, and tail lights
- LED Mid-body turn signals
- LED FMVSS #108 clearance lights and reflectors
- ICC reflective tape
- Rear camera bracket and flood lights - reverse activated
- Body undercoating
- Customer's choice of one color finish paint from ColorSmart brochure
- Standard 1-year (2,000 hours of operation) w arranty
- ANSI Z 245.1-2012 Compliant
- Cavity coat and joint sealer
- Safety Triangle
- 5 lb. In-Cab Fire Extinguisher

Effective January,1,2016 DuraPack 5000 Sales Order Form

Base Units DuraPack 5000 - EJECT ONLY			
☐	18 cubic yard		$60,369
☐	20 cubic yard		$61,914
☐	25 cubic yard		$64,994
☐	27 cubic yard		$66,524
☐	32 cubic yard		$69,391
Hopper Size			3.94 yd³
CHASSIS MUST COMFORM WITH HEIL'S MOST CURRENT CHASSIS SPECIFICATIONS FOUND AT WWW.HEIL.COM			
* NOTE: Red numbers reference Option Photo Index			
Mounting Options			
☐	Full Factory Mount for Eject Models		$2,755
☐	Semi-Mount - consists of frame cut-off, permanent mounting brackets and light electrical wiring only		$1,375
☐	Strap Mount - chassis must be suitable for temporary mount when received - Heil will connect lights and provide temporary mounting brackets		$790
☐	Mount at Dealer Destination		$705
Power Take Off / Pump Options			
☐	Remote Mount Gear Pump		STD
☐	Remote Mount Vane Pump - Fast Cycle*		$515
☐	Direct Mount Gear Pump - Not available on Mack Granite		$690
☐	Front Mount Vane Pump		$4,245
☐	Front Mount Vane Pump - Fast Cycle*		$4,766
☐	Operate at Idle (OAI) Front Mount Vane Pump		$6,635
☐	Hot Shift PTO with Over speed Protection		$2,835
☐	Cable Shift PTO - manual shift transmission only		$1,015
☐	Air Shift PTO - manual shift transmission only		$1,220
☐	890 Hot Shift PTO with Gear Pump		$3,590
* Fast Cycle Pumps give 17-19 sec Cycle Times			
Certain transmission / chassis configurations may not have proper clearance to allow direct mount or live power systems driven off of the transmission			
Lighting and Electrical Accessories			
☐	Hopper Work Light Kit - switch on tailgate	L1	$335
☐	Hopper Work Light Kit - switch in-cab	L1	$335
☐	Dual Hopper Work Light Kit - two lights - switch on tailgate	L9	$450
☐	Dual Hopper Work Light Kit - two lights - switch in cab	L9	$450
☐	Dual Work Lights Outside of Hopper		$450
☐	Body Side Backing Assist Lights - reverse activated	L3	$485
☐	LED Body Side Backing Assist Lights - reverse activated		$740
☐	Peterson Multi-Function (SMART) LED Strobe / Turn Lamps - includes LED light package for entire unit	L10	$585
☐	Strobe Light, Amber - upper LH corner of tailgate - in-cab switch	L4	$645
☐	Dual Strobe Lights, Amber - upper LH & RH on tailgate - in-cab switch	L14	$930
☐	Strobe Light, Amber - mounted right-center, front of body - in-cab switch	L4	$645
☐	Dual Front LED Oval Strobe Lights, Amber - in-cab switch		$740
☐	Dual Rear LED Oval Strobe Lights, Amber - in-cab switch		$740
☐	Dual Rear LED Oval Strobe Lights, Amber - pump activated		$740
☐	Strobe Light bracket on upper tailgate		$190
☐	Left Hand Buzzer Kit	CE1	$165
Container Handling / Cart Tipper Options			
☐	12,000 Pound Line Pull Drum Winch with Control Kit	MG9	$5,610
☐	15,000 Pound Line Pull Reeving Cylinder with Control Kit	MG3	$6,230
☐	15,000 Pound Line Pull Recessed Reeving Cylinder with Control Kit	MG3	$7,800
	Recessed Reeving kits are not applicable on units less than 25 yard		
☐	Adjustable Roll Bar with Control Kit		$3,960
☐	Arm Mechanism with Control Kit	MG5	$5,610
☐	Bolt-on Reeving Cylinder Bracket Only	MG10	$515
All of the above mechanisms require the latch kit below, except for Arm Mechanism			
Riding steps cannot be supplied with Arm Mechanism option			
☐	Lip and Latch Kit - with short sill extension - to suit application without cart tipper(s) - Can't be used with Roll Bar	MG6.1	$1,075
☐	Lip and Latch Kit - with 20°, 7 inch sill extension with cutouts for cart tippers	MG6.3	$1,575
	☐ Single Tipper Center Mounted ☐ Single Tipper Offset to Curbside ☐ Dual Tipper		
☐	Lip and Latch Kit - with 20°, 7 inch sill extension - to suit application without cart tipper(s) €	MG6.2	$1,476
€ Suitable for aftermarket install of cart tippers			
☐	Single Control Valve Section with Control Handle	MG2	$1,275
☐	Double Control Valve Section with Control Handles	MG2	$1,950
☐	Triple Control Valve Section with Control Handles	MG2	$3,100
☐	Single Cart Tipper Control Valve, Handle, Plumbing and Hose Kit	MG2	$1,910
☐	Dual Cart Tipper Control Valve, Handle, Plumbing and Hose Kit	MG2	$3,100
☐	Bayne Cart Tipper - Specify Model - Includes Controls, Valves, Plumbing, and Installation		See Bayne
☐	Customer Installed Single Cart Tipper Kit - Bayne Bracket, Control Valve, Handle, Plumbing and Hose Kit	MG1	$2,235
☐	Customer Installed Double Cart Tipper Kit - Bayne Bracket, Control Valve, Handle, Plumbing and Hose Kit	MG1	$3,420
	Specify Brand and Model		
CUSTOMER SUPPLIED CART TIPPERS ARE NOT ADMISSIBLE			

Effective January,1,2016 DuraPack 5000 Sales Order Form

Body Options			
☐	Hopper Floor Kit (1/4" - 150,000 psi in lieu of standard 3/16" 150,000 psi)		$876
☐	Hopper Floor Overlay Kit (3/16" - 150,000 psi)		$1,320
☐	DP 5000 H.D. Contractors Package (includes 1/4" hopper floor, 3/16" hopper front face liner and tailgate spill troughs)		$1,450
☐	4" Hopper Lip Extension - for hand loading only	B23	$835
☐	Hopper Lip Reinforcement Kit		$486
☐	Tailgate Side Spill Troughs	B13	$685
☐	Automatic Hydraulic Tailgate Locks	B46	$3,635
☐	Extended Tailgate Seal Kit		$300
☐	Body Side Access Door with Step & Grab	B21	$1,700
☐	Body Front Head Closure Kit incl. Side Door Step and Grab	B22	$2,000
☐	Side Door Interlock Kit - shuts down pump when open (requires Hot Shift PTO or Front mount pump)		$500
☐	Hydraulic Pressure Gauge Kit (shipped loose in cab)	B2	$295
☐	High Pressure Filter Kit	B3	$870
☐	Hydraulic Oil Tank Heater - 500 watt		$1,140
☐	Hydraulic Tank Low Oil Level Warning Kit		$1,040
☐	In-Body Oil Tank	B14	$1,180
☐	60 Gallon Wash-Out Tank	B10	$1,945
☐	20 lb. Fire Extinguisher with Bracket	B4	$477
☐	Dual 20 lb. Fire Extinguisher with Bracket		$955
☐	Tool Box (18" x 18" x 36") - frame mounted	B5	$780
☐	Tool Box (18" x 18" x 24") - frame mounted	B5	$735
☐	Broom and Shovel Rack - mounted on tailgate	B15	$205
☐	Dual Broom and Shovel Rack - mounted on both sides of tailgate	B15	$405
☐	Mud Flaps - anti-sail / anti-splash - mounted ahead of rear tires	B7	$215
☐	Mud Flaps - anti-sail / anti-splash - tailgate mounted behind rear tires	B7	$300
☐	Mud Guards - steel - mounted ahead of rear tires	B8	$315
☐	5 Gallon Cooler and Bracket - frame mounted	B12	$335
☐	Return Line Check Valve Kit	B11	$485
☐	Upper Panel Cover Kit		$410
☐	1/4" Body Floor Kit		$2,310
☐	Roof Tube Cover Kit		$1,000
☐	Fender Extension Kit		$695
☐	Roadway Sign Frames		$1,940
☐	Spill Kit - In Cab		$325
☐	Spill Kit - Front of Body		$325
☐	Hydraulic Oil Tank Quick Disconnect Kit - For use with filter buggy		$785
☐	Anti-Back Pack Valve Kit		$910
Camera Systems			
All camera systems are mounted with protective camera brackets and twin tailgate flood lights			
CAMERA MONITOR LOCATION WILL BE CAB ROOF MOUNTED			
Swivel monitor bracket will be provided for dual drive chassis			
360 ° Camera Systems and Options			
☐	360 Degree Camera Package - Includes 360 degree camera system (4 camera), DVR capability, Dash Camera, Operator Facing Camera, and Hopper Camera.		$8,979
☐	360 Base Camera System - Includes 360 (4 Camera System) for Monitoring Only		$8,113
☐	Add DVR for Recording Function - Includes Dash Camera for Road Facing View		$1,613
☐	Add Operator Facing Camera for Operator Monitoring		$369
☐	Add Hopper Camera		$994
3rd Eye Camera Systems			
☐	3rd Eye Single Camera with LCD Color Monitor		$2,445
☐	3rd Eye Double Camera with LCD Color Monitor		$3,767
☐	3rd Eye Triple Camera with LCD Color Monitor		$5,030
	Camera 1 Location - Mounted on Tailgate Facing Rear		
	Camera 2 Location - Choose: ☐ Left Hand Side Cab - ☐ Right Hand Side Cab		
	Camera 3 Location - Choose: ☐ Left Hand Side Cab - ☐ Right Hand Side Cab		
Load Cell Scale Systems			
☐	Heil Optimum Payload System (HOPS) using Air-Weigh Axle Scales	CE20	$8,400
☐	Air-Weigh Axle Scale System without Interlock	CE20	$7,836
Auxiliary Axles and Tires			
* NOTE: All axles MUST BE installed with tires so chassis can be re-certified to new GAWR and GVWR ratings			
☐	Watson & Chalin Rigid Axle: 25,000 pound capacity, hub piloted or 20" spoke wheel hubs, 30/30 brake chambers, automatic slack adjusters, 1,300 cubic inch air tank and regulator kit - for pusher applications		$10,415
☐	255/70R-22.5 - load range H, 5,510 pound single max load at 120 psi with rim - 2 tires installed		$2,155
☐	275/70R-22.5 - load range H, 7,000 pound single max load at 120 psi with rim - 2 tires installed		$2,725
☐	11 R-22.5 - load range H, 6,610 pound single max load at 120 psi with rim - 2 tires installed		$2,295
* Note: All auxiliary applications must be approved by Heil prior to order acceptance			

Effective January,1,2016 DuraPack 5000 Sales Order Form

CNG Installation - Top of Body Installation			
☐	CNG Installation Charge - Includes brackets, hardware, and mounting of CNG system		$5,405
Extended Warranty			
☐	Five (5) Year (Maximum 10,000 hrs. of Operation) Cylinder Warranty		$3,300
Paint Options			
NOTE: LIST PAINT CODES ON PAINT DIAGRAM			
☐	Customized Paint Color - Paint Color Code NOT included in the Color Smart Brochure		$375
☐	Two Tone Paint		$1,430
☐	Paint Striping - first stripe		$1,200
☐	Paint Striping - each additional stripe		$670
☐	Metallic Paint		$1,200
☐	Clear coat Finish		$1,670
☐	Anti-Graffiti Clear coat Finish		$2,400
☐	Prime Paint Only - deduct		($969)
TOTALS			
	Total from Options Above (MSRP)		**$0**
	Additional Options (SOARs, Chassis Mods, Etc.) Total		
	Subtotal		**$0**
	Dealer Discount (%)	**0%**	**$0**
	Dealer Net Price		**$0**
	Additional Discount (SPR)		
	Freight		
	Total Price per Unit		**$0**

DURAPACK® 5000

Paint Stripe & Accessories Requirements

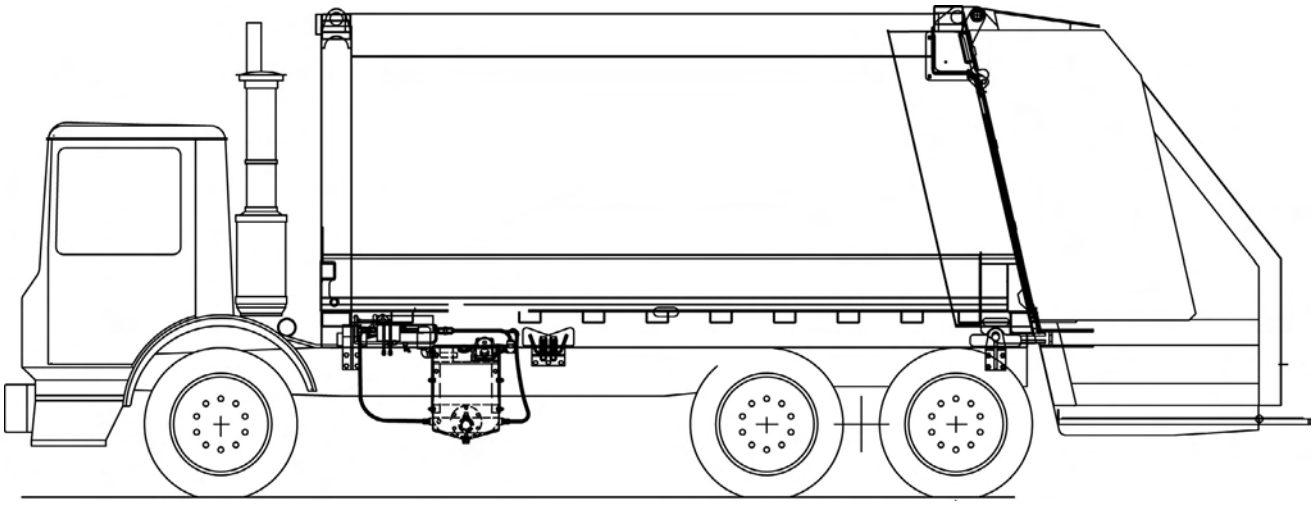

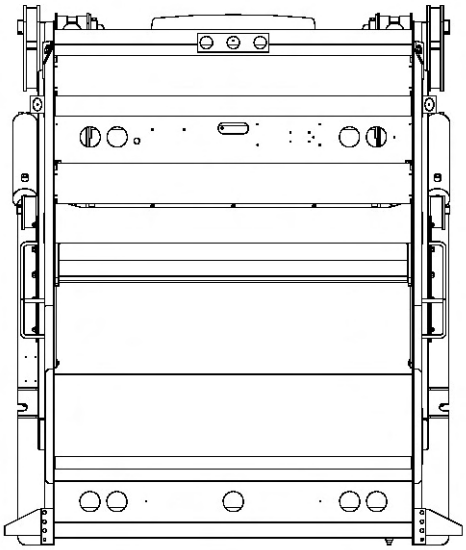

PAINT AND OPTIONS LAYOUT DETAIL
USE THIS FORM TO DESCRIBE PAINT SCHEMES
BE SPECIFIC ABOUT DIMENSIONS AND DETAILS

Sales Order #		Submitted by	
Customer			
Paint Color 1			
Paint Color 2			
Paint Color 3			
Chassis Make			
Chassis Model			
Wheelbase			
Body Size		Approved by	

PowerTrack® Commercial

High Compaction Rear Loader

Standard Equipment Features included in Base Price

• 3.94 yd^3 hopper	• Right side packer controls
• Smooth side body construction	• Backup alarm
• Extra-duty 80,000 psi body	• Backup and license plate light
• Bolt-on ANSI rear riding steps	• LED Center-mounted brake light
• Tailgate service props	• LED Duplicate high and low mount stop, turn, and tail lights
• Remote mount cast iron roller bearing gear pump (less PTO)	• LED Mid-body turn signals
• Chrome-plated cylinder rods	• LED FMVSS #108 clearance lights and reflectors
• Chrome-plated ejector cylinder sleeves	• ICC reflective tape
• Underbody mounted oil tank	• Rear camera bracket and flood lights - reverse activated
• Level/temperature/sight gauge for hydraulic oil tank	• Body undercoating
• Oil suction shut-off valve	• Customer's choice of one color finish paint from ColorSmart brochure
• 3-micron return line filter with magenetic trap and in-cab filter bypass monitor	• Standard 1-year (2,000 hours of operation) warranty
• 100-micron suction line strainer	• ANSI Z 245.1-2012 Compliant
• Regenerative valve for fast packer and reload times	• Cavity coat and joint sealer
• Neutral safety switch for automatic transmissions only	• Safety Triangle
• Right side buzzer controls	• 5 lb. In-Cab Fire Extinguisher

Effective January,1,2016 PowerTrak Commercial Sales Order Form

Base Units PowerTrak Commercial - EJECT ONLY			
☐	25 cubic yard		$72,545
☐	27 cubic yard		$74,075
☐	32 cubic yard		$76,903
Hopper Size			3.64 yd³
CHASSIS MUST COMFORM WITH HEIL'S MOST CURRENT CHASSIS SPECIFICATIONS AT WWW.HEIL.COM			
* NOTE: Red numbers reference Option Photo Index			
Mounting Options			
☐	Full Factory Mount for Eject Models		$2,755
☐	Semi-Mount - consists of frame cut-off, permanent mounting brackets and light electrical wiring only		$1,375
☐	Strap Mount - chassis must be suitable for temporary mount when received - Heil will connect lights and provide temporary mounting brackets		$790
☐	Mount at Dealer Destination		$705
Power Take Off / Pump Options			
☐	Remote Mount Gear Pump		STD
☐	Direct Mount Gear Pump - Not available on Mack Granite		$690
☐	Front Mount Vane Pump		$4,245
☐	Operate at Idle (OAI) Remote Mount Vane Pump with Transmission Driven, Constant Duty PTO		$7,855
☐	Operate at Idle (OAI) Front Mount Tandem Vane Pump		$6,635
☐	Hot Shift PTO with Over speed Protection		$2,835
☐	Cable Shift PTO - manual shift transmission only		$1,015
☐	Air Shift PTO - manual shift transmission only		$1,220
☐	890 Hot Shift PTO with Gear Pump		$3,590
Certain transmission / chassis configurations may not have proper clearance to allow direct mount or live power systems driven off of the transmission			
Lighting and Electrical Accessories			
☐	Hopper Work Light Kit - switch on tailgate	L1	$335
☐	Hopper Work Light Kit - switch in cab	L1	$335
☐	Dual Hopper Work Light Kit - two lights - switch on tailgate	L9	$450
☐	Dual Hopper Work Light Kit - two lights - switch in cab	L9	$450
☐	Dual Work Lights Outside of Hopper		$450
☐	Body Side Backing Assist Lights - reverse activated	L3	$485
☐	LED Body Side Backing Assist Lights - reverse activated		$740
☐	Peterson Multi-Function (SMART) LED Strobe / Turn Lamps - includes LED light package for entire unit	L10	$585
☐	Municipal Lights with Dual 7" Amber LEDs & Overhead Flood Light	L2	$1,385
☐	Strobe Light, Amber - upper LH corner of tailgate - in-cab switch	L4	$650
☐	Dual Strobe Lights, Amber - upper LH & RH on tailgate - in-cab switch	L14	$930
☐	Strobe Light, Amber - mounted right-center, front of body - in-cab switch	L4	$650
☐	Dual Front LED Oval Strobe Lights, Amber - in-cab switch		$740
☐	Dual Rear LED Oval Strobe Lights, Amber - in-cab switch		$740
☐	Dual Rear LED Oval Strobe Lights, Amber - pump activated		$740
☐	Strobe Light bracket on upper tailgate		$190
☐	Left Hand Buzzer Kit	CE1	$165
Container Handling / Cart Tipper Options			
☐	12,000 Pound Line Pull Drum Winch with Control Kit	MG9	$5,610
☐	15,000 Pound Line Pull Reeving Cylinder with Control Kit	MG3	$6,230
☐	15,000 Pound Line Pull Recessed Reeving Cylinder with Control Kit	MG3	$7,800
	Recessed Reeving kits are not applicable on units less than 25 yard		
☐	Roll Bar Adjustable with Control Kit	MG7	$3,960
☐	Lip and Latch Kit - to suit application without cart tipper(s)		$1,476
☐	Lip and Latch Kit - to suit application with cart tipper(s)		$1,575
	☐ Single Tipper Center Mounted ☐ Single Tipper Offset to Curbside ☐ Dual Tippers		
☐	Single Control Valve Section with Control Handle	MG2	$1,270
☐	Double Control Valve Section with Control Handles	MG2	$1,950
☐	Single Cart Tipper Control Valve, Handle, Plumbing and Hose Kit	MG2	$1,910
☐	Dual Cart Tipper Control Valve, Handle, Plumbing and Hose Kit	MG2	$3,100
☐	Bayne Cart Tipper - Specify Model - Includes Controls, Valves, Plumbing, and Installation		See Bayne
☐	Customer Installed Single Cart Tipper Kit - Bayne Bracket, Control Valve, Handle, Plumbing and Hose Kit	MG1	$2,235
☐	Customer Installed Double Cart Tipper Kit - Bayne Bracket, Control Valve, Handle, Plumbing and Hose Kit	MG1	$3,420
	Specify Brand and Model		
CUSTOMER SUPPLIED CART TIPPERS ARE NOT ADMISSIBLE			

Effective January,1,2016 PowerTrak Commercial Sales Order Form

Body Options			
☐	Hopper Floor Overlay Kit (3/16" - 150,000 psi)		$1,320
☐	PowerTrak Comm. H.D. Contractors Package (incl. 3/16" hopper floor overlay liner and 10 ga. hopper wall overlay liners @ 400 BHN - 145,000 psi)		$2,100
☐	Body Side Access Door with Step & Grab	B21	$1,700
☐	Body Front Head Closure Kit incl. Side Door Step and Grab	B22	$2,000
☐	Side Door Interlock Kit - shuts down pump when open (requires Hot Shift PTO or Front mount pump)		$500
☐	Shur-Lock™ Hydraulic Tailgate Locks		$3,930
☐	Hydraulic Pressure Gauge Kit (shipped loose in cab)	B3	$295
☐	High Pressure Filter Kit		$866
☐	Hydraulic Oil Tank Heater - 500 watt		$1,140
☐	Hydraulic Tank Low Oil Level Warning Kit		$1,040
☐	In-Body Oil Tank	B14	$1,180
☐	60 Gallon Washout Tank	B10	$1,945
☐	20 lb. Fire Extinguisher with Bracket	B4	$477
☐	Dual 20 lb. Fire Extinguisher with Bracket		$955
☐	Tool Box (18" x 18" x 36") - frame mounted	B5	$780
☐	Tool Box (18" x 18" x 24") - frame mounted	B5	$735
☐	Broom and Shovel Rack - mounted on tailgate	B16	$205
☐	Mud Flaps - anti-sail / anti-splash - mounted ahead of rear tires	B7	$215
☐	Mud Flaps - anti-sail / anti-splash - tailgate mounted behind rear tires	B7	$300
☐	Mud Guards - steel - mounted ahead of rear tires	B8	$315
☐	5 Gallon Cooler and Bracket - frame mounted	B12	$335
☐	Return Line Check Valve Kit	B11	$485
☐	1/4" Body Floor Kit		$2,310
☐	Roof Tube Cover Kit		$1,000
☐	Fender Extension Kit		$695
☐	Roadway Sign Frames		$1,940
☐	Spill Kit - In Cab		$325
☐	Spill Kit - Front of Body		$325
☐	Hydraulic Oil Tank Quick Disconnect Kit - For use with filter buggy		$785
☐	Anti-Back Pack Valve Kit		$910
Camera Systems			
All camera systems are mounted with protective camera brackets and twin tailgate flood lights			
CAMERA MONITOR LOCATION WILL BE CAB ROOF MOUNTED			
Swivel monitor bracket will be provided for dual drive chassis			
360 ˚ Camera Systems and Options			
☐	360 Degree Camera Package - Includes 360 degree camera system (4 camera), DVR capability, Dash Camera, Operator Facing Camera, and Hopper Camera.		$8,979
☐	360 Base Camera System - Includes 360 (4 Camera System) for Monitoring Only		$8,113
☐	Add DVR for Recording Function - Includes Dash Camera for Road Facing View		$1,613
☐	Add Operator Facing Camera for Operator Monitoring		$369
☐	Add Hopper Camera		$994
3rd Eye Camera Systems			
☐	3rd Eye Single Camera with LCD Color Monitor		$2,440
☐	3rd Eye Double Camera with LCD Color Monitor		$3,767
☐	3rd Eye Triple Camera with LCD Color Monitor		$5,030
	Camera 1 Location - Mounted on Tailgate Facing Rear		
	Camera 2 Location - Choose: ☐ Left Hand Side Cab - ☐ Right Hand Side Cab		
	Camera 3 Location - Choose: ☐ Left Hand Side Cab - ☐ Right Hand Side Cab		
	All camera monitors on dual drive chassis will receive a monitor swivel bracket as standard		
Load Cell Scale Systems			
☐	Heil Optimum Payload System (HOPS) using Air-Weigh Axle Scales	CE20	$8,400
☐	Air-Weigh Axle Scale System without Interlock	CE20	$7,836
Auxiliary Axles and Tires			
* NOTE: All axles MUST BE installed with tires so chassis can be re-certified to new GAWR and GVWR ratings			
☐	Watson & Chalin Rigid Axle: 25,000 pound capacity, hub piloted or 20" spoke wheel hubs, 30/30 brake chambers, automatic slack adjusters, 1,300 cubic inch air tank and regulator kit - for pusher applications		$10,415
☐	255/70R-22.5 - load range H, 5,510 pound single max load at 120 psi with rim - 2 tires installed		$2,155
☐	275/70R-22.5 - load range H, 7,000 pound single max load at 120 psi with rim - 2 tires installed		$2,725
☐	11 R-22.5 - load range H, 6,610 pound single max load at 120 psi with rim - 2 tires installed		$2,295
* Note: All auxiliary applications must be approved by Heil prior to order acceptance			
CNG Installation - Top of Body Installation			
☐	CNG Installation Charge - Includes brackets, hardware, and mounting of CNG system		$5,405

Effective January,1,2016 PowerTrak Commercial Sales Order Form

Extended Warranty			
☐	Five (5) Year (Maximum 10,000 hrs. of Operation) Cylinder Warranty		$4,375
Paint Options			
NOTE: LIST PAINT CODES ON PAINT DIAGRAM			
☐	Customized Paint Color - Paint Color Code NOT included in the Color Smart Brochure		$375
☐	Two Tone Paint		$1,430
☐	Paint Striping - first stripe		$1,200
☐	Paint Striping - each additional stripe		$670
☐	Metallic Paint		$1,200
☐	Clear coat Finish		$1,670
☐	Anti-Graffiti Clear coat Finish		$2,400
☐	Prime Paint Only - deduct		($969)
TOTALS			
	Total from Options Above (MSRP)		**$0**
	Additional Options (SOARs, Chassis Mods, Etc.) Total		
	Subtotal		**$0**
	Dealer Discount (%)	**0%**	**$0**
	Dealer Net Price		**$0**
	Additional Discount (SPR)		
	Freight		
	Total Price per Unit		**$0**

POWERTRAK® COMMERCIAL

Paint Stripe & Accessories Requirements

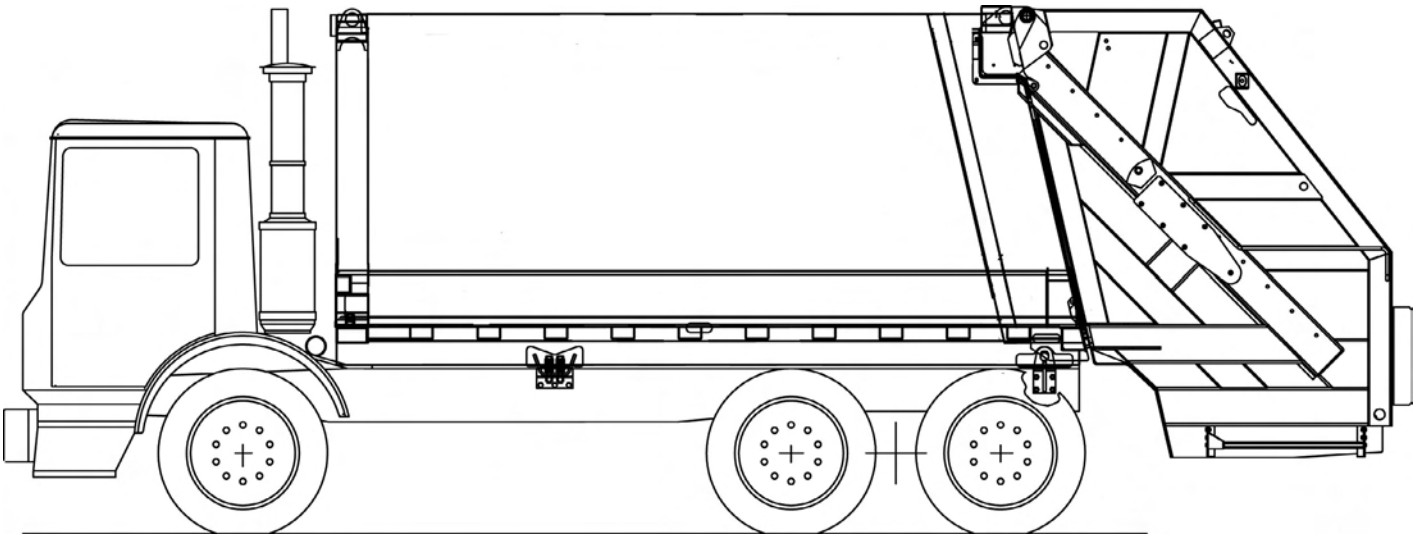

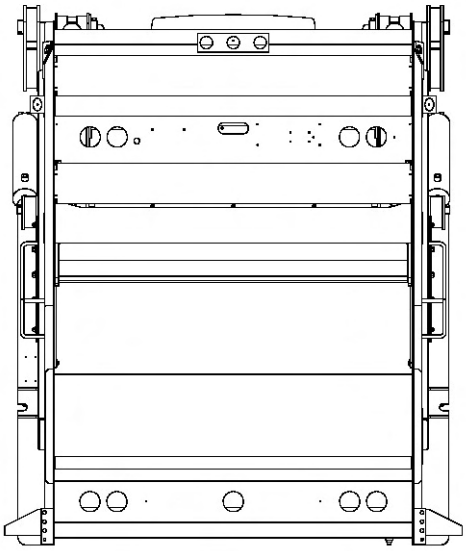

PAINT AND OPTIONS LAYOUT DETAIL
USE THIS FORM TO DESCRIBE PAINT SCHEMES
BE SPECIFIC ABOUT DIMENSIONS AND DETAILS

Sales Order #		Submitted by	
Customer			
Paint Color 1			
Paint Color 2			
Paint Color 3			
Chassis Make			
Chassis Model			
Wheelbase			
Body Size		Approved by	

PowerTrak® Commercial Plus

High-Compaction Tag Axle Rear Loader

Standard Equipment Features included in Base Price

• 3.94 yd^3 hopper	• Right side buzzer controls
• Non-steer 14,000 pound capacity Tag Axle - tires not included	• Right side packer controls
• Smooth side body construction	• Backup alarm
• Extra-duty 80,000 psi body	• Backup and license plate light
• Bolt-on ANSI rear riding steps	• LED Center-mounted brake light
• Tailgate service props	• LED Duplicate high and low mount stop, turn, and tail lights
• Remote mount cast iron roller bearing gear pump (less PTO)	• LED Mid-body turn signals
• Chrome-plated cylinder rods	• LED FMVSS #108 clearance lights and reflectors
• Chrome-plated ejector cylinder sleeves	• ICC reflective tape
• Underbody mounted oil tank	• Rear camera bracket and flood lights - reverse activated
• Level/temperature/sight gauge for hydraulic oil tank	• Body undercoating
• Oil suction shut-off valve	• Customer's choice of one color finish paint from ColorSmart brochure
• 3-micron return line filter with magenetic trap and in-cab filter bypass monitor	• Standard 1-year (2,000 hours of operation) warranty
• 100-micron suction line strainer	• ANSI Z 245.1-2012 Compliant
• Regenerative valve for fast packer and reload times	• Cavity coat and joint sealer
• Neutral safety switch for automatic transmissions only	• Safety Triangle
	• 5 lb. In-Cab Fire Extinguisher

Environmental Solutions Group
A DOVER COMPANY

Effective January,1,2016 PowerTrak Commercial Plus Sales Order Form

Base Units PowerTrak Commercial Plus - EJECT ONLY			
☐	25 cubic yard - Includes Silent Drive Tag Axle*		$88,055
☐	27 cubic yard - Includes Silent Drive Tag Axle*		$89,585
☐	32 cubic yard - Includes Silent Drive Tag Axle*		$91,115
Hopper Size			3.64 yd³
*Tag Axle does not include Tires			
CHASSIS MUST COMFORM WITH HEIL'S MOST CURRENT CHASSIS SPECIFICATIONS AT WWW.HEIL.COM			
* NOTE: Red numbers reference Option Photo Index			
Mounting Options			
☐	Full Factory Mount for Eject Models		$2,755
☐	Semi-Mount - consists of frame cut-off, permanent mounting brackets and light electrical wiring only		$1,375
☐	Strap Mount - chassis must be suitable for temporary mount when received - Heil will connect lights and provide temporary mounting brackets		$790
☐	Mount at Dealer Destination		$705
Power Take Off / Pump Options			
☐	Remote Mount Gear Pump		STD
☐	Direct Mount Gear Pump - Not available on Mack Granite		$690
☐	Front Mount Vane Pump		$4,245
☐	Operate at Idle (OAI) Front Mount Tandem Vane Pump		$6,635
☐	Hot Shift PTO with Over speed Protection		$2,835
☐	Cable Shift PTO - manual shift transmission only		$1,015
☐	Air Shift PTO - manual shift transmission only		$1,220
☐	890 Hot Shift PTO with Gear Pump		$3,590
Certain transmission / chassis configurations may not have proper clearance to allow direct mount or live power systems driven off of the transmission			
Lighting and Electrical Accessories			
☐	Hopper Work Light Kit - switch on tailgate	L1	$335
☐	Hopper Work Light Kit - switch in cab	L1	$335
☐	Dual Hopper Work Light Kit - two lights - switch on tailgate	L9	$450
☐	Dual Hopper Work Light Kit - two lights - switch in cab	L9	$450
☐	Dual Work Lights Outside of Hopper		$450
☐	Body Side Backing Assist Lights - reverse activated	L3	$485
☐	LED Body Side Backing Assist Lights - reverse activated		$740
☐	Peterson Multi-Function (SMART) LED Strobe / Turn Lamps - includes LED light package for entire unit	L10	$585
☐	Municipal Lights with Dual 7" Amber LEDs & Overhead Flood Light	L2	$1,385
☐	Strobe Light, Amber - upper LH corner of tailgate - in-cab switch	L4	$650
☐	Dual Strobe Lights, Amber - upper LH & RH on tailgate - in-cab switch	L14	$930
☐	Strobe Light, Amber - mounted right-center, front of body - in-cab switch	L4	$650
☐	Dual Front LED Oval Strobe Lights, Amber - in-cab switch		$740
☐	Dual Rear LED Oval Strobe Lights, Amber - in-cab switch		$740
☐	Dual Rear LED Oval Strobe Lights, Amber - pump activated		$740
☐	Strobe Light bracket on upper tailgate		$190
☐	Left Hand Buzzer Kit	CE1	$165
Container Handling / Cart Tipper Options			
☐	12,000 Pound Line Pull Drum Winch with Control Kit	MG9	$5,610
☐	15,000 Pound Line Pull Reeving Cylinder with Control Kit	MG3	$6,230
☐	15,000 Pound Line Pull Recessed Reeving Cylinder with Control Kit	MG3	$7,800
	Recessed Reeving kits are not applicable on units less than 25 yard		
☐	Standard Roll Bar with Control Kit - Latch Pivot	MG7	$3,810
☐	Roll Bar with Control Kit - Mid-Latch Pivot		$3,810
☐	Roll Bar with Control Kit - Bolster Pivot	MG8	$3,810
All of the above mechanisms require the latch kit below, except for Arm Mechanism			
☐	Lip and Latch Kit - to suit application without cart tipper(s)		$1,140
☐	Lip and Latch Kit - to suit application with cart tipper(s)		$1,575
	☐ Single Tipper Center Mounted ☐ Single Tipper Offeset to Curbside ☐ Dual Tippers		
☐	Single Control Valve Section with Control Handle	MG2	$1,270
☐	Double Control Valve Section with Control Handles	MG2	$1,950
☐	Single Cart Tipper Control Valve, Handle, Plumbing and Hose Kit	MG2	$1,910
☐	Dual Cart Tipper Control Valve, Handle, Plumbing and Hose Kit	MG2	$3,100
☐	Bayne Cart Tipper - Specify Model - Includes Controls, Valves, Plumbing, and Installation		See Bayne
☐	Customer Installed Single Cart Tipper Kit - Bayne Bracket, Control Valve, Handle, Plumbing and Hose Kit	MG1	$2,235
☐	Customer Installed Double Cart Tipper Kit - Bayne Bracket, Control Valve, Handle, Plumbing and Hose Kit	MG1	$3,420
	Specify Brand and Model		
CUSTOMER SUPPLIED CART TIPPERS ARE NOT ADMISSIBLE			

Effective January,1,2016 PowerTrak Commercial Plus Sales Order Form

Body Options			
☐	PowerTrak Comm. H.D. Contractors Package (incl. 3/16" hopper floor overlay liner and 10 ga. hopper wall overlay liners @ 400 BHN - 180,000 psi)		$2,100
☐	Body Side Access Door with Step & Grab	B21	$1,700
☐	Body Front Head Closure Kit incl. Side Door Step and Grab	B22	$2,000
☐	Side Door Interlock Kit - shuts down pump when open (requires Hot Shift PTO or Front mount pump)		$500
☐	Hydraulic Pressure Gauge Kit (shipped loose in cab)	B2	$295
☐	High Pressure Filter Kit	B3	$866
☐	Hydraulic Oil Tank Heater - 500 watt		$1,140
☐	Hydraulic Tank Low Oil Level Warning Kit		$1,040
☐	In-Body Oil Tank	B14	$1,180
☐	60 Gallon Washout Tank	B10	$1,945
☐	20 lb. Fire Extinguisher with Bracket	B4	$477
☐	Dual 20 lb. Fire Extinguisher with Bracket		$955
☐	Tool Box (18" x 18" x 36") - frame mounted	B5	$780
☐	Tool Box (18" x 18" x 24") - frame mounted	B5	$735
☐	Broom and Shovel Rack - mounted on tailgate	B16	$205
☐	Mud Flaps - anti-sail / anti-splash - mounted ahead of rear tires	B7	$215
☐	Mud Flaps - anti-sail / anti-splash - tailgate mounted behind rear tires	B7	$300
☐	Mud Guards - steel - mounted ahead of rear tires	B8	$315
☐	5 Gallon Cooler and Bracket - frame mounted	B12	$335
☐	Return Line Check Valve Kit	B11	$485
☐	1/4" Body Floor Kit		$2,310
☐	Roof Tube Cover Kit		$1,000
☐	Fender Extension Kit		$695
☐	Roadway Sign Frames		$1,940
☐	Spill Kit - In Cab		$325
☐	Spill Kit - Front of Body		$325
☐	Hydraulic Oil Tank Quick Disconnect Kit - For use with filter buggy		$785
☐	Anti-Back Pack Valve Kit		$910
Camera Systems			
All camera systems are mounted with protective camera brackets and twin tailgate flood lights			
CAMERA MONITOR LOCATION WILL BE CAB ROOF MOUNTED			
Swivel monitor bracket will be provided for dual drive chassis			
360 ˚ Camera Systems and Options			
☐	360 Degree Camera Package - Includes 360 degree camera system (4 camera), DVR capability, Dash Camera, Operator Facing Camera, and Hopper Camera.		$8,979
☐	360 Base Camera System - Includes 360 (4 Camera System) for Monitoring Only		$8,113
☐	Add DVR for Recording Function - Includes Dash Camera for Road Facing View		$1,613
☐	Add Operator Facing Camera for Operator Monitoring		$369
☐	Add Hopper Camera		$994
3rd Eye Camera Systems			
☐	3rd Eye Single Camera with LCD Color Monitor		$2,440
☐	3rd Eye Double Camera with LCD Color Monitor		$3,767
☐	3rd Eye Triple Camera with LCD Color Monitor		$5,030
	Camera 1 Location - Mounted on Tailgate Facing Rear		
	Camera 2 Location - Choose: ☐ Left Hand Side Cab - ☐ Right Hand Side Cab		
	Camera 3 Location - Choose: ☐ Left Hand Side Cab - ☐ Right Hand Side Cab		
Load Cell Scale Systems			
☐	Heil Optimum Payload System (HOPS) using Air-Weigh Axle Scales	CE20	$8,400
☐	Air-Weigh Axle Scale System without Interlock	CE20	$7,836
Auxiliary Axles and Tires			
* NOTE: All axles MUST BE installed with tires so chassis can be re-certified to new GAWR and GVWR ratings			
☐	Watson & Chalin Rigid Axle: 25,000 pound capacity, hub piloted or 20" spoke wheel hubs, 30/30 brake chambers, automatic slack adjusters, 1,300 cubic inch air tank and regulator kit - for pusher applications		$10,415
☐	255/70R-22.5 - load range H, 5,510 pound single max load at 120 psi with rim - 2 tires installed		$2,155
☐	275/70R-22.5 - load range H, 7,000 pound single max load at 120 psi with rim - 2 tires installed		$2,725
☐	255/70R-22.5 - load range H, 5,510 pound single max load at 120 psi with rim - 4 tires installed, Pusher and Tag		$4,300
☐	275/70R-22.5 - load range H, 7,000 pound single max load at 120 psi with rim - 4 tires installed, Pusher and Tag		$5,440
* Note: All auxiliary applications must be approved by Heil prior to order acceptance			
CNG Installation - Top of Body Installation			
☐	CNG Installation Charge - Includes brackets, hardware, and mounting of CNG system		$5,405
Extended Warranty			
☐	Five (5) Year (Maximum 10,000 hrs. of Operation) Cylinder Warranty		$4,375

Effective January,1,2016 PowerTrak Commercial Plus Sales Order Form

Paint Options

NOTE: LIST PAINT CODES ON PAINT DIAGRAM

☐	Customized Paint Color - Paint Color Code NOT included in the Color Smart Brochure		$375
☐	Two Tone Paint		$1,430
☐	Paint Striping - first stripe		$1,200
☐	Paint Striping - each additional stripe		$670
☐	Metallic Paint		$1,200
☐	Clear coat Finish		$1,670
☐	Anti-Graffiti Clear coat Finish		$2,400
☐	Prime Paint Only - deduct		($969)

TOTALS

	Total from Options Above (MSRP)		**$0**
	Additional Options (SOARs, Chassis Mods, Etc.) Total		
	Subtotal		**$0**
	Dealer Discount (%)	**0%**	**$0**
	Dealer Net Price		**$0**
	Additional Discount (SPR)		
	Freight		
	Total Price per Unit		**$0**

POWERTRAK® COMMERCIAL PLUS

Paint Stripe & Accessories Requirements

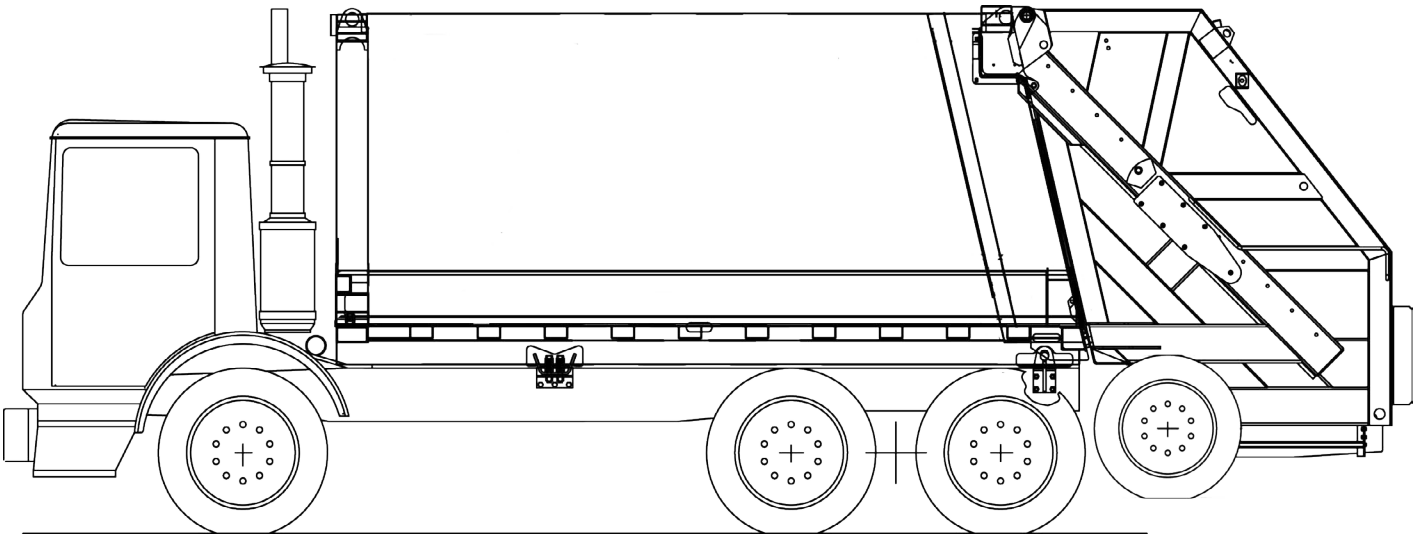

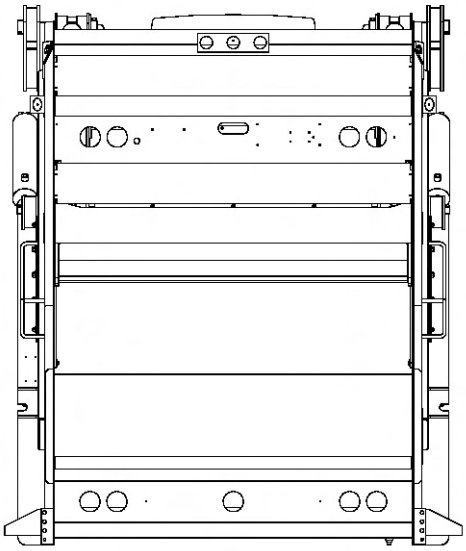

PAINT AND OPTIONS LAYOUT DETAIL
USE THIS FORM TO DESCRIBE PAINT SCHEMES
BE SPECIFIC ABOUT DIMENSIONS AND DETAILS

Sales Order #		Submitted by	
Customer			
Paint Color 1			
Paint Color 2			
Paint Color 3			
Chassis Make			
Chassis Model			
Wheelbase			
Body Size		Approved by	

DuraPack® Rapid Rail®

High-Performance Automated Side Loader

Standard Equipment Features included in Base Price

- 5.2yd ³ hopper
- 96 in. lift reach
- Standard 1 year (2000 hrs) warranty
- Lift capacity up to 1,600 lbs.
- Street side access door with step and grab
- Under hopper liquid sump with 2 clean-out doors and steel rake
- Body service props for dump or service hoist models
- Tailgate service props
- Fully automatic Shur-Lock™ tailgate locks
- O.I.G.A.I front mount tandem vane pump system
- Chassis frame-mounted oil tank with level / temperature gauge and suction shut-off valve
- 3-micron return line filter with magnetic trap and in-cab filter bypass monitor - in microns
- Fabric guard hose protection for all high-pressure hoses
- In-cab packing controls, electric/air
- In-cab lift controls, electric, joystick
- In-cab hoist controls for dumping models, air
- In-cab tailgate controls, air
- 100-micron suction line strainer
- Cortex Controller™ with InSight™ diagnostic display and standard lift cycle counter
- Lift feathering kit
- 6-Roller Carriage
- Solid state control panel
- In-cab function and indicator lights
- Select-O-Pack
- AutoLift™
- Arm rest
- Lift reach warning
- Backup alarm
- Backup and license plate lights
- LED center mounted brake light
- LED duplicate high and low mount stop, turn, and tail lights
- LED mid-body turn signals
- LED FMVSS #108 clearance lights and reflectors
- ICC reflective tape
- Rear mud flaps- anti-sail/anti-splash
- Rear underride guard
- Rear camera bracket and flood lights - reverse activated
- Body undercoating
- Customer's choice of one color finish paint from ColorSmart brochure
- Standard 1-year (2,000 hours of operation) warranty
- ANSI Z 245.1-2012 Compliant
- Cavity coat and joint sealer
- Remote packer lube kit
- 5 lb. In-Cab Fire Extinguisher
- Safety Triangle

Effective January,1,2016 DuraPack Rapid Rail Sales Order Form

Base Units DuraPack Rapid Rail			
☐	22 cubic yard - CNrG Tailgate Not Available With This Body Size		$123,420
	☐ EJECT ☐ DUMP ☐ ervice Hoist ☐ viceable Eject		
☐	24 cubic yard - CNrG Tailgate Not Available With This Body Size		$124,440
	☐ EJECT ☐ DUMP ☐ ervice Hoist ☐ viceable Eject		
☐	26 cubic yard - CNrG Tailgate Reduces Tailgate Capacity by **2** Cubic Yards - **24 Cubic Yard Unit With CNrG**		$126,480
	☐ EJECT ☐ UMP ☐ ervice Hoist ☐ viceable Eject		
☐	28 cubic yard - CNrG Tailgate Reduces Tailgate Capacity by **2** Cubic Yards - **26 Cubic Yard Unit With CNrG**		$127,500
	☐ EJECT ☐ UMP ☐ ervice Hoist ☐ viceable Eject		
☐	33 cubic yard - CNrG Tailgate Reduces Tailgate Capacity by **2** Cubic Yards - **31 Cubic Yard Unit With CNrG**		$130,560
	☐ EJECT ☐ UMP ☐ ervice Hoist ☐ viceable Eject		
☐	Service Hoist Kit	B9	$4,215
☐	Serviceable Eject		$2,220
Hopper Size			5.2 yd³
CHASSIS MUST COMFORM WITH HEIL'S MOST CURRENT CHASSIS SPECIFICATIONS AT WWW.HEIL.COM			
* NOTE: Red numbers reference Option Photo Index			
Mounting Options			
☐	Full Factory Mount for Service Hoist, Eject Models, and Serviceable Eject		$5,290
☐	Full Factory Mount for Dump Models		$5,685
☐	Mount at Dealer Destination		$705
Grabber and Lift Options			
☐	TriCuff Grabber - handles a variety of 30 to 110 gallon square, rectangular and round semi-automated and automated barrels	MG16	$1,265
☐	Belt Grabbers with Spring Loaded Inner Arm - to accommodate 60/90 gallon round automated barrels	MG15	$1,265
☐	Universal Belt Grabbers with Spring Loaded Inner Arm - to accommodate 90 - 300 gallon round automated barrels	MG18	$1,265
☐	Changeable Spring Steel Grabbers - for 60 and 90 gallon round automated barrels with 26" - 27" grab diameter	MG17	$1,265
☐	Changeable Spring Steel Grabbers - for 300 gallon round automated barrels with 41" - 43" grab diameter	MG17	$1,265
☐	Grabber Interlock Kit - prevents lift raise with grabbers in open position and grabbers opening in the lift raised position		$1,145
☐	Grabber storage bracket supplied at no charge when any TWO sets of spring steel grabbers are ordered		
Power Take Off / Pump Options			
☐	Operate-in-gear-at-idle (OIGAI) Front Mount Tandem Vane Pump		STD
☐	Operate-in-gear-at-idle (OIGAI) Remote Mount Tandem Vane Pump with Transmission Driven, Constant Duty PTO		$2,835
☐	890 Hot Shift PTO with Tandem Vane Pump		$4,615
☐	897 Constant Duty PTO with Tandem Vane Pump		$4,615
Lighting and Electrical Accessories			
☐	Hopper and Lift Work Light Kit - LED - two lights - in-cab switch	L11	$695
☐	Peterson Multi-Function (SMART) LED Strobe / Turn Lamps - includes LED light package for entire unit	L10	$585
☐	Body Side Backing Assist Lights mounted front body bolster - reverse activated	L6	$485
☐	Strobe Light, Amber - in-cab switch, pump on, and reverse activated - mounted lower tailgate	L4	$645
☐	Dual Oval Flat LED Strobes - in-cab switch - mounted mid-tailgate	L15	$1,015
☐	Dual Oval Flat LED Strobes - in-cab switch, pump on, and reverse activated - mounted mid-tailgate	L15	$1,015
☐	Dual Front Oval LED Strobes		$740
☐	Strobe Light, Amber - in-cab switch - mounted on cab	L4	$645
Lift Controls, Options and Accessories			
☐	Lift Cycle Counter In Addition to the Counter Provided with the Standard In Sight Display	CE8	$620
☐	Remote Lift Controls - mounted under seat on right hand side	CE9	$1,480
☐	Rapid Rail Style Control Box with paddle switches		$1,480
Body Options			
☐	Hopper and Body Floor Liner (3/16" - 150,000 psi)		$1,320
☐	1/4" AR400 Body Floor in lieu of standard 3/16" AR400		$1,230
☐	Severe Duty Packer Wear Bar Kit - hopper only		$820
☐	3" Hopper Drain Valve	B20	$330
☐	Mud Guards - steel - mounted ahead of tires	B8	$315
☐	Mud Flaps - anti-sail / anti-splash - ahead of rear tires	B7	$215
☐	Hopper Hood	B10	$1,900
☐	Manual Hopper Cover - Standard Cover - mesh expanded metal with extended handle accessible from ground	B33	$1,165
☐	Manual Hopper Cover for use with Hopper Hood		$1,165
☐	Hydraulic Sliding Top Door with Lift Interlock and indicator light in cab - Cannot be used in conjunction with hopper hood	B28	$6,420
☐	Triple Cart Holder - mounted on tailgate for transporting empty carts - Not Available with CNrG CNG System		$345
☐	20 lb. Fire Extinguisher with Bracket	B4	$477
☐	Dual 20 lb. Fire Extinguishers with Bracket		$955
☐	Tool Box (18" x 18" x 36") - frame mounted - available on Eject Models Only	B5	$780
☐	Tool Box (18" x 18" x 24") - frame mounted - available on Eject Models Only	B5	$735
☐	Tool Box (18" x 18" x 24") - bumper mounted	B6	$735
☐	Hydraulic Pressure Gauge Kit (shipped loose in cab)	B2	$295
☐	Hydraulic Oil Tank Heater - 500 watts		$1,140
☐	Hydraulic Tank Low Oil Level Warning Kit		$1,040
☐	Dual High Pressure Filter Kit	B3	$1,725
☐	Rear Caution Decal	B24	$275
☐	Return Line Check Valve Kit		$485
☐	Broom and Shovel Kit - Mounted Underbody - Includes Broom and Shovel		$200
☐	Hydraulic Oil Tank Quick Disconnect Kit - For use with filter buggy		$785
☐	Spill Kit		$325
☐	Fender Extension Kit		$695
☐	Sump Chutes		$445
☐	Tapered Roof Kit - Only Available in 28 cubic yard units - Helps reduce trash from blowing out		$1,435
☐	Low Profile Shur Lock Tailgate Locks MUST be used with Tag Axle Applications - Does not have T/G closed indicator flag		$345
☐	Infinity Series Packer/Eject Cylinders with scrapers and hardened rods to 50 HRC by Rosenboom - Includes Five (5) Year Packer/Eject Cylinder Warranty covering dents and dings		$2,935
Note: Hopper hood may not be ordered in conjunction with a sliding top door			

Effective January,1,2016 DuraPack Rapid Rail Sales Order Form

	CNrG Tailgate Mounted CNG - Includes Installation Fee - Reduces Yardage Capacity 2 Cubic Yards		
☐	60 DGE CNG System - NOT AVAILABLE ON A DUMP UNIT		$38,855
☐	75 DGE CNG System - NOT AVAILABLE ON A DUMP UNIT		$40,475
☐	90 DGE CNG System - NOT AVAILABLE ON A DUMP UNIT		$46,008
	CNrG Options		
☐	Front Bumper Fill with Kill Cap		$1,200
☐	Fast Fill Fuel Management Option		$1,800
☐	Defuel Transfer Hose - 35 ft.		$1,915
	Camera Systems		
All camera systems are mounted with protective camera brackets and twin tailgate flood lights			
CAMERA MONITOR LOCATION WILL BE CAB ROOF MOUNTED			
Swivel monitor bracket will be provided for dual drive chassis			
	360 ˚ Camera Systems and Options		
☐	360 Degree Camera Package - Includes 360 degree camera system (4 camera), DVR capability, Dash Camera, Operator Facing Camera, and Hopper Camera.		$9,863
☐	360 Base Camera System - Includes 360 (4 Camera System) for Monitoring Only		$8,113
☐	Add DVR for Recording Function - Includes Dash Camera for Road Facing View		$1,613
☐	Add Operator Facing Camera for Operator Monitoring		$369
☐	Add Hopper Camera		$994
	3rd Eye Camera Systems		
☐	3rd Eye Single Camera with LCD Color Monitor		$2,440
☐	3rd Eye Double Camera with LCD Color Monitor		$3,767
☐	3rd Eye Triple Camera with LCD Color Monitor		$5,030
	Camera 1 Location - Mounted on Tailgate Facing Rear		
	Camera 2 Location - ☐ Left Hand Side Cab - ☐ Right Hand Side Cab - ☐ Hopper - ☐ Grabber		
	Camera 3 Location - ☐ Left Hand Side Cab - ☐ Right Hand Side Cab - ☐ Hopper - ☐ Grabber		
	Load Cell Scale Systems		
☐	Heil Optimum Payload System (HOPS) using Air-Weigh Axle Scales	CE20	$8,400
☐	Air-Weigh Axle Scale System without Interlock	CE20	$7,836
	Auxiliary Axles and Tires		
* NOTE: All axles MUST BE installed with tires so chassis can be re-certified to new GAWR and GVWR ratings. Tag Axle applications will automatically receive the low profile Shur Lock tailgate lock kit at the price listed below.			
☑	Watson & Chalin Self Steering Pusher Axle: 13,000 pound capacity, hub piloted or 20" spoke wheel hubs, automatic slack adjusters, type 16 air chambers, steering stabilizer kit and reverse lift kit		$13,595
☐	Watson & Chalin Self Steering Tag Axle: 13,000 pound capacity, hub piloted or 20" spoke wheel hubs, automatic slack adjusters, type 16 air chambers, steering stabilizer kit and reverse lift kit		$13,595
☐	Watson & Chalin Rigid Pusher Axle: 25,000 pound capacity, hub piloted or 20" spoke wheel hubs, 30/30 brake chambers, automatic slack adjusters, 1,300 cubic inch air tank and regulator kit		$10,415
☐	Watson & Chalin Rigid Tag Axle: 25,000 pound capacity, hub piloted or 20" spoke wheel hubs, 30/30 brake chambers, automatic slack adjusters, 1,300 cubic inch air tank and regulator kit		$10,415
☐	Tag Axle Lock-Down Kit - required on dumping units		$1,170
☐	Tag Axle Steering Lock Kit - required on all dump units with steerable tag axles if not provided with the axle		$1,170
☐	Low profile Shur Lock tailgate lock kit.		$345
☐	Tag Axle Spill Shield - Prevents debris from collecting on the tag axle		$300
☐	255/70R-22.5 - load range H, 5,510 pound single max load at 120 psi with rim - 2 tires installed		$2,155
☐	275/70R-22.5 - load range H, 7,000 pound single max load at 120 psi with rim - 2 tires installed		$2,725
☐	11 R-22.5 - load range H, 6,610 pound single max load at 120 psi with rim - 2 tires installed		$2,295
* Note: All auxiliary applications must be approved by Heil prior to order acceptance			
	CNG Installation - Top of Body Installation		
☐	CNG Installation Charge - Includes brackets, hardware, and mounting of CNG system		$5,405
	Extended Warranty		
☐	Five (5) Year (Maximum 10,000 hrs. of Operation) All other Non-Infinity Cylinder Warranty - Requires purchase of Infinity packer or eject Cylinders from above		$8,120
	Paint Options		
NOTE: LIST PAINT CODES ON PAINT DIAGRAM			
☐	Customized Paint Color - Paint Color Code NOT included in the Color Smart Brochure		$375
☐	Customized Lift Paint - Any color other than Visibility Yellow (Standard)		$315
☐	Two Tone Paint		$1,430
☐	Paint Striping - first stripe		$1,200
☐	Paint Striping - each additional stripe		$670
☐	Metallic Paint		$1,200
☐	Clear coat Finish		$1,670
☐	Anti-Graffiti Clear coat Finish		$2,400
☐	Prime Paint Only - deduct		($1,220)

Effective January,1,2016 DuraPack Rapid Rail Sales Order Form

TOTALS			
	Total from Options Above (MSRP)		$0
	Additional Options (SOARs, Chassis Mods, Etc.) Total		
	Subtotal		$0
	Dealer Discount (%)	0%	$0
	Dealer Net Price		$0
	Additional Discount (SPR)		
	Freight		
	Total Price per Unit		$0

DURAPACK® RAPID RAIL®

Paint Stripe & Accessories Requirements

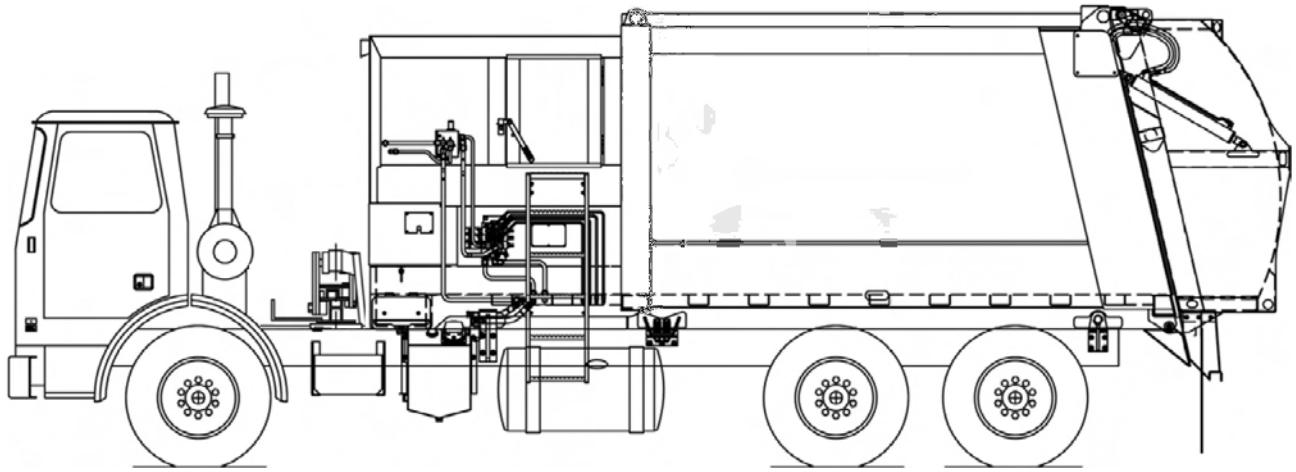

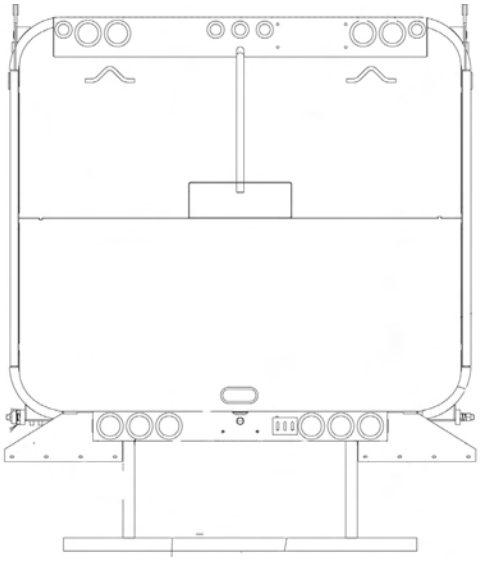

PAINT AND OPTIONS LAYOUT DETAIL
USE THIS FORM TO DESCRIBE PAINT SCHEMES
BE SPECIFIC ABOUT DIMENSIONS AND DETAILS

Sales Order #		Submitted by	
Customer			
Paint Color 1			
Paint Color 2			
Paint Color 3			
Chassis Make			
Chassis Model			
Wheelbase			
Body Size		Approved by	

DuraPack® Python®

High-Performance Automated Side Loader

Standard Equipment Features included in Base Price

- 5.2yd ³ hopper
- 108 in. lift reach
- Python Lift - 2 year limited structural w arranty
- Lift capacity up to 800 lbs.
- Street side access door w ith step and grab
- Under hopper liquid sump w ith 2 clean-out doors and steel rake
- Body service props for dump or service hoist models
- Tailgate service props
- Fully automatic Shur-Lock™ tailgate locks
- O.I.G.A.I front mount tandem vane pump system
- Cushioned up and dow n chrome-plated rods
- Chassis frame-mounted oil tank w ith level / temperature gauge and suction shut-off valve
- 3-micron return line filter w ith magnetic trap and in-cab filter bypass monitor - in microns
- Fabric guard hose protection for all high-pressure hoses
- In-cab packing controls, electric/air
- In-cab lift controls, air/electric, joystick
- In-cab hoist controls for dumping models, air
- In-cab tailgate controls, air
- 100-micron suction line strainer
- Cortex Controller™ w ith InSight™ diagnostic display and standard lift cycle counter
- In-cab function and indicator lights
- Select-O-Pack
- AutoLift™
- Arm rest
- Lift reach w arning
- Backup alarm
- Backup and license plate lights
- LED center mounted brake light
- LED duplicate high and low mount stop, turn, and tail lights
- LED mid-body turn signals
- LED FMVSS #108 clearance lights and reflectors
- ICC reflective tape
- Rear mud flaps- anti-sail/anti-splash
- Rear underride guard
- Rear camera bracket and flood lights - reverse activated
- Body undercoating
- Customer's choice of one color finish paint from ColorSmart brochure
- Standard 1-year (2,000 hours of operation) w arranty
- ANSI Z 245.1-2012 Compliant
- Cavity coat and joint sealer
- Remote packer lube kit
- 5 lb. In-Cab Fire Extinguisher
- Safety Triangle

Environmental Solutions Group
A DOVER COMPANY

Effective January,1,2016 DuraPack Python Sales Order Form

Base Units DuraPack Python			
☐	22 cubic yard - CNrG Tailgate Not Available With This Body Size		$117,122
	☐ EJECT ☐ DUMP ☐ Service Hoist ☐ Serviceable Eject		
☐	24 cubic yard - CNrG Tailgate Not Available With This Body Size		$118,157
	☐ EJECT ☐ DUMP ☐ Service Hoist ☐ Serviceable Eject		
☐	26 cubic yard - CNrG Tailgate Reduces Tailgate Capacity by **2** Cubic Yards - **24 Cubic Yard Unit With CNrG**		$120,197
	☐ EJECT ☐ DUMP ☐ Service Hoist ☐ Serviceable Eject		
☐	28 cubic yard - CNrG Tailgate Reduces Tailgate Capacity by **2** Cubic Yards - **26 Cubic Yard Unit With CNrG**		$121,227
	☐ EJECT ☐ DUMP ☐ Service Hoist ☐ Serviceable Eject		
☐	33 cubic yard - CNrG Tailgate Reduces Tailgate Capacity by **2** Cubic Yards - **31 Cubic Yard Unit With CNrG**		$124,287
	☐ EJECT ☐ DUMP ☐ Service Hoist ☐ Serviceable Eject		
☐	Service Hoist Kit	B9	$4,215
☐	Serviceable Eject		$2,220
Hopper Size			5.2 yd³
CHASSIS MUST COMFORM WITH HEIL'S MOST CURRENT CHASSIS SPECIFICATIONS AT WWW.HEIL.COM			
* NOTE: Red numbers reference Option Photo Index			
Mounting Options			
☐	Full Factory Mount for Service Hoist, Eject Models, and Serviceable Eject		$5,290
☐	Full Factory Mount for Dump Models		$5,685
☐	Mount at Dealer Destination		$705
Grabber and Lift Options			
☐	TriCuff Grabber - handles a variety of 30 to 110 gallon square, rectangular and round semi-automated and automated barrels	MG16	$1,265
☐	Belt Grabbers with Spring Loaded Inner Arm - to accommodate 60/90 gallon round automated barrels	MG15	$1,265
☐	Universal Belt Grabbers with Spring Loaded Inner Arm - to accommodate 90 - 300 gallon round automated barrels	MG18	$1,265
☐	Changeable Spring Steel Grabbers - for 60 and 90 gallon round automated barrels with 26" - 27" grab diameter	MG17	$1,265
☐	Changeable Spring Steel Grabbers - for 300 * gallon round automated barrels with 41" - 43" grab diameter	MG17	$1,265
☐	Grabber Interlock Kit - prevents lift raise with grabbers in open position and grabbers opening in the lift raised position		$1,145
☐	Grabber storage bracket supplied at no charge when any TWO sets of spring steel grabbers are ordered		
Power Take Off / Pump Options			
☐	Operate-in-gear-at-idle (OIGAI) Front Mount Tandem Vane Pump		STD
☐	Operate-in-gear-at-idle (OIGAI) Remote Mount Tandem Vane Pump with Transmission Driven, Constant Duty PTO		$2,835
☐	890 Hot Shift PTO with Tandem Vane Pump		$4,615
☐	897 Constant Duty PTO with Tandem Vane Pump		$4,615
Lighting and Electrical Accessories			
☐	Hopper and Lift Work Light Kit - LED - two lights - in-cab switch	L11	$695
☐	Peterson Multi-Function (SMART) LED Strobe / Turn Lamps - includes LED light package for entire unit	L10	$585
☐	Body Side Backing Assist Lights mounted front body bolster - reverse activated	L6	$485
☐	Strobe Light, Amber - in-cab switch, pump on, and reverse activated - mounted lower tailgate	L4	$645
☐	Dual Oval Flat LED Strobes - in-cab switch - mounted mid-tailgate	L15	$1,015
☐	Dual Oval Flat LED Strobes - in-cab switch, pump on, and reverse activated - mounted mid-tailgate	L15	$1,015
☐	Dual Front Oval LED Strobes		$740
☐	Strobe Light, Amber - in-cab switch - mounted on cab	L4	$645
Lift Controls, Options and Accessories			
☐	Lift Cycle Counter In Addition to the Counter Provided with the Standard In Sight Display	CE8	$620
☐	Remote Lift Controls - mounted under seat on right hand side*	CE9	$1,480
☐	Additional Joystick Control for Lift - mounted in-cab	CE10	$1,715
Body Options			
☐	Hopper and Body Floor Liner (3/16" - 150,000 psi)		$1,320
☐	1/4" AR400 Body Floor in lieu of standard 3/16" AR400		$1,230
☐	Severe Duty Packer Wear Bar Kit - hopper only		$820
☐	3" Hopper Drain Valve	B20	$330
☐	Mud Guards - steel - mounted ahead of tires	B8	$315
☐	Mud Flaps - anti-sail / anti-splash - ahead of rear tires	B7	$215
☐	Hopper Hood	B10	$1,900
☐	Manual Hopper Cover - Standard Cover - mesh expanded metal with extended handle accessible from ground	B33	$1,165
☐	Manual Hopper Cover for use with Hopper Hood		$1,165
☐	Hydraulic Sliding Top Door with Lift Interlock and indicator light in cab - Cannot be used in conjunction with hopper hood	B28	$6,420
☐	Triple Cart Holder - mounted on tailgate for transporting empty carts - Not Available with CNrG CNG System		$345
☐	20 lb. Fire Extinguisher with Bracket	B4	$477
☐	Dual 20 lb. Fire Extinguishers with Bracket		$955
☐	Tool Box (18" x 18" x 36") - frame mounted - available on Eject Models Only	B5	$780
☐	Tool Box (18" x 18" x 24") - frame mounted - available on Eject Models Only	B5	$735
☐	Tool Box (18" x 18" x 24") - bumper mounted	B6	$735
☐	Hydraulic Pressure Gauge Kit (shipped loose in cab)	B2	$295
☐	Hydraulic Oil Tank Heater - 500 watts		$1,140
☐	Hydraulic Tank Low Oil Level Warning Kit		$1,040
☐	Dual High Pressure Filter Kit	B3	$1,725
☐	Rear Caution Decal	B24	$275
☐	Return Line Check Valve Kit		$485
☐	Broom and Shovel Kit - Mounted Underbody - Includes Broom and Shovel		$200
☐	Hydraulic Oil Tank Quick Disconnect Kit - For use with filter buggy		$785
☐	Spill Kit		$325
☐	Fender Extension Kit		$695
☐	Sump Chutes		$445
☐	Tapered Roof Kit - Only Available in 28 cubic yard units - Helps reduce trash from blowing out		$1,435
☐	Low Profile Shur Lock Tailgate Locks MUST be used with Tag Axle Applications - Does not have T/G closed indicator flag		$345
☐	Infinity Series Packer/Eject Cylinders with scrapers and hardened rods to 50 HRC by Rosenboom - Includes Five (5) Year Packer/Eject Cylinder Warranty covering dents and dings		$2,935
Note: Hopper hood may not be ordered in conjunction with a sliding top door			

Effective January,1,2016 DuraPack Python Sales Order Form

	CNrG Tailgate Mounted CNG - Includes Installation Fee - Reduces Yardage Capacity 2 Cubic Yards		
☐	60 DGE CNG System - NOT AVAILABLE ON A DUMP UNIT		$38,855
☐	75 DGE CNG System - NOT AVAILABLE ON A DUMP UNIT		$40,475
☐	90 DGE CNG System - NOT AVAILABLE ON A DUMP UNIT		$46,008
	CNrG Options		
☐	Front Bumper Fill with Kill Cap		$1,200
☐	Fast Fill Fuel Management Option		$1,800
☐	Defuel Transfer Hose - 35 ft.		$1,915
	Camera Systems		
	All camera systems are mounted with protective camera brackets and twin tailgate flood lights		
	CAMERA MONITOR LOCATION WILL BE CAB ROOF MOUNTED		
	Swivel monitor bracket will be provided for dual drive chassis		
	360 ° Camera Systems and Options		
☐	360 Degree Camera Package - Includes 360 degree camera system (4 camera), DVR capability, Dash Camera, Operator Facing Camera, and Hopper Camera.		$9,863
☐	360 Base Camera System - Includes 360 (4 Camera System) for Monitoring Only		$8,113
☐	Add DVR for Recording Function - Includes Dash Camera for Road Facing View		$1,613
☐	Add Operator Facing Camera for Operator Monitoring		$369
☐	Add Hopper Camera		$994
	3rd Eye Camera Systems		
☐	3rd Eye Single Camera with LCD Color Monitor		$2,440
☐	3rd Eye Double Camera with LCD Color Monitor		$3,767
☐	3rd Eye Triple Camera with LCD Color Monitor		$5,030
	Camera 1 Location - Mounted on Tailgate Facing Rear		
	Camera 2 Location - ☐ Left Hand Side Cab - ☐ Right Hand Side Cab - ☐ Hopper - ☐ Grabber		
	Camera 3 Location - ☐ Left Hand Side Cab - ☐ Right Hand Side Cab - ☐ Hopper - ☐ Grabber		
	Load Cell Scale Systems		
☐	Heil Optimum Payload System (HOPS) using Air-Weigh Axle Scales	CE20	$8,400
☐	Air-Weigh Axle Scale System without Interlock	CE20	$7,836
	Auxiliary Axles and Tires		
	* NOTE: All axles MUST BE installed with tires so chassis can be re-certified to new GAWR and GVWR ratings. Tag Axle applications will automatically receive the low profile Shur Lock tailgate lock kit at the price listed below.		
☑	Watson & Chalin Self Steering Pusher Axle: 13,000 pound capacity, hub piloted or 20" spoke wheel hubs, automatic slack adjusters, type 16 air chambers, steering stabilizer kit and reverse lift kit		$13,595
☐	Watson & Chalin Self Steering Tag Axle: 13,000 pound capacity, hub piloted or 20" spoke wheel hubs, automatic slack adjusters, type 16 air chambers, steering stabilizer kit and reverse lift kit		$13,595
☐	Watson & Chalin Rigid Pusher Axle: 25,000 pound capacity, hub piloted or 20" spoke wheel hubs, 30/30 brake chambers, automatic slack adjusters, 1,300 cubic inch air tank and regulator kit		$10,415
☐	Watson & Chalin Rigid Tag Axle: 25,000 pound capacity, hub piloted or 20" spoke wheel hubs, 30/30 brake chambers, automatic slack adjusters, 1,300 cubic inch air tank and regulator kit		$10,415
☐	Tag Axle Lock-Down Kit - required on dumping units		$1,170
☐	Tag Axle Steering Lock Kit - required on all dump units with steerable tag axles if not provided with the axle		$1,170
☐	Low profile Shur Lock tailgate lock kit.		$345
☐	Tag Axle Spill Shield - Prevents debris from collecting on the tag axle		$300
☐	255/70R-22.5 - load range H, 5,510 pound single max load at 120 psi with rim - 2 tires installed		$2,155
☐	275/70R-22.5 - load range H, 7,000 pound single max load at 120 psi with rim - 2 tires installed		$2,725
☐	11 R-22.5 - load range H, 6,610 pound single max load at 120 psi with rim - 2 tires installed		$2,295
	* Note: All auxiliary applications must be approved by Heil prior to order acceptance		
	CNG Installation - Top of Body Installation		
☐	CNG Installation Charge - Includes brackets, hardware, and mounting of CNG system		$5,405
	Extended Warranty		
☐	Five (5) Year (Maximum 10,000 hrs. of Operation) All other Non-Infinity Cylinder Warranty - Requires purchase of Infinity packer or eject Cylinders from above		$8,120
	Paint Options		
	NOTE: LIST PAINT CODES ON PAINT DIAGRAM		
☐	Customized Paint Color - Paint Color Code NOT included in the Color Smart Brochure		$375
☐	Customized Lift Paint - Any color other than Visibility Yellow (Standard)		$315
☐	Two Tone Paint		$1,430
☐	Paint Striping - first stripe		$1,200
☐	Paint Striping - each additional stripe		$670
☐	Metallic Paint		$1,200
☐	Clear coat Finish		$1,670
☐	Anti-Graffiti Clear coat Finish		$2,400
☐	Prime Paint Only - deduct		($1,220)
	TOTALS		
	Total from Options Above (MSRP)		**$0**
	Additional Options (SOARs, Chassis Mods, Etc.) Total		
	Subtotal		**$0**
	Dealer Discount (%)	**0%**	**$0**
	Dealer Net Price		**$0**
	Additional Discount (SPR)		
	Freight		
	Total Price per Unit		**$0**

DURAPACK® PYTHON®

Paint Stripe & Accessories Requirements

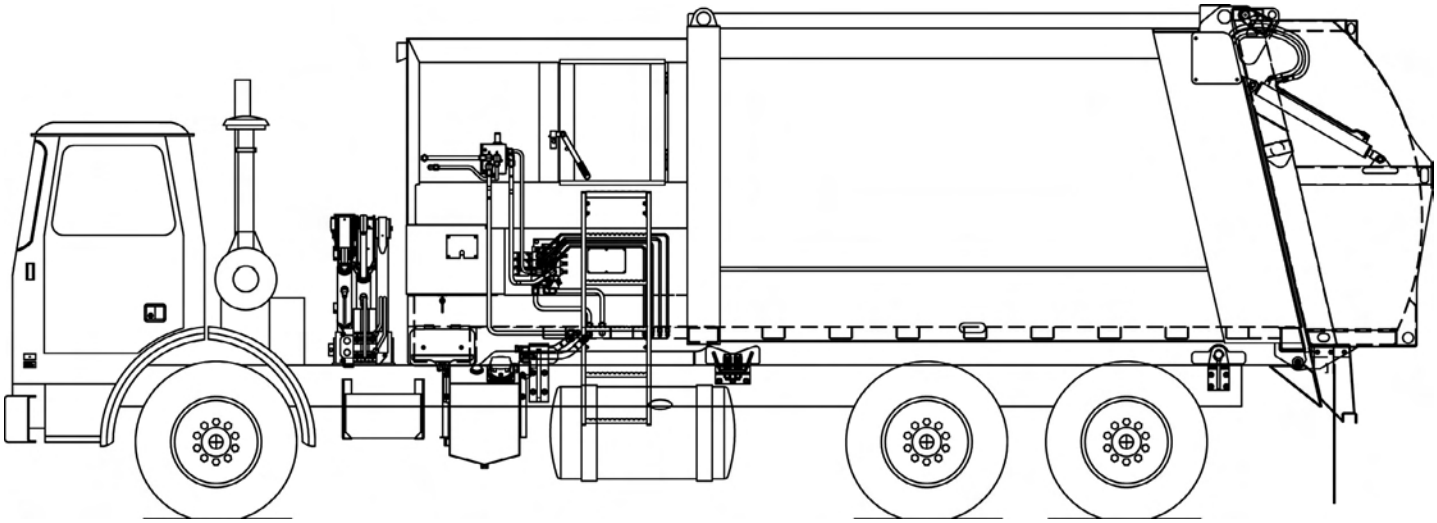

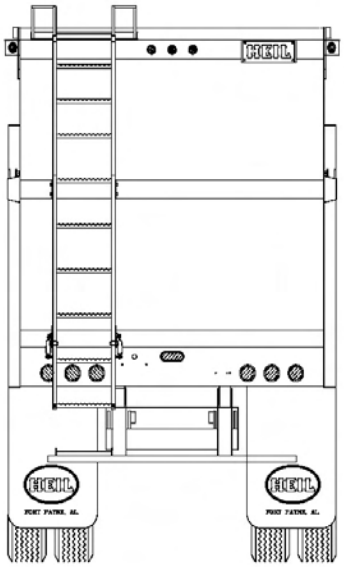

PAINT AND OPTIONS LAYOUT DETAIL
USE THIS FORM TO DESCRIBE PAINT SCHEMES
BE SPECIFIC ABOUT DIMENSIONS AND DETAILS

Sales Order #		Submitted by	
Customer			
Paint Color 1			
Paint Color 2			
Paint Color 3			
Chassis Make			
Chassis Model			
Wheelbase			
Body Size		Approved by	

Liberty™

Continuous-Pack Automated Side Loader

Standard Equipment Features included in Base Price

- 3.3 yd^3 hopper (self-cleaning)
- 108 in. lift reach
- Python Lift - 2-year limited structural warranty
- Lift capacity up to 800 lbs.
- Body service props
- Tailgate service props
- Fully automatic tailgate locks
- Grease zerks - for entire system only
- O.I.G.A.I. front mount tandem vane pump system
- Cushioned up and down with chrome-plated rods
- Chassis frame-mounted oil tank with level/temperature gauge and oil suction shut-off valve
- 3-micron return line filter with magnetic trap and in-cab filter bypass monitor - in microns
- 100-micron suction line strainer
- Fabric guard hose protection for all high pressure hoses
- In-cab packing controls, electric
- In-cab lift controls, air/electric, joystick
- In-cab hoist controls, electric
- In-cab tailgate controls, electric
- In-cab function and indicator lights
- AutoLift™
- Arm rest
- Lift reach warning
- Backup alarm
- Backup and license plate lights
- LED Center mounted brake light
- LED Duplicate high and low mount stop, turn, and tail lights
- LED Mid-body turn signals
- LED FMVSS #108 clearance lights and reflectors
- ICC reflective tape
- Rear mud flaps - anti-sail/anti-splash
- Rear underride guard
- Rear camera bracket and flood lights - reverse activated
- Customer's choice of one color finish paint from ColorSmart brochure
- Standard 1-year (2,000 hours of operator) warranty
- ANSI Z 245.1-2012 Compliant
- Cavity coat and joint sealer
- Inisde-body front closure
- Outside mounted upper packer lube line
- Safety Triangle
- 5 lb. In-Cab Fire Extinguisher

Effective January,1,2016 Liberty Sales Order Form

Base Units Liberty - DUMP ONLY			
☐	16 cubic yard		$107,059
☐	20 cubic yard		$109,160
☐	22 cubic yard		$110,252
☐	24 cubic yard		$111,241
☐	26 cubic yard		$112,302
☐	30 cubic yard		$114,388
☐	32 cubic yard		$115,449
Hopper Size			3.3 yd³
CHASSIS MUST COMFORM WITH HEIL'S MOST CURRENT CHASSIS SPECIFICATIONS AT WWW.HEIL.COM			
* NOTE: Red numbers reference Option Photo Index			
Mounting Options			
☐	Full Factory Mount for Dump Models		$5,685
☐	Mount at Dealer Destination		$705
Grabber and Lift Options			
☐	TriCuff Grabber - handles a variety of 30 to 110 gallon square, rectangular and round semi-automated and automated barrels	MG16	$1,265
☐	TriCuff Grip Rite Grabber - handles a variety of 30 to 110 gallon square, rectangular and round semi-automated and automated barrels. No Spring Tensioner		$1,265
☐	Belt Grabbers with Spring Loaded Inner Arm - to accommodate 60/90 gallon round automated barrels	MG15	$1,265
☐	Universal Belt Grabbers with Spring Loaded Inner Arm - to accommodate 90 - 300 * gallon round automated barrels	MG18	$1,265
☐	Changeable Spring Steel Grabbers - for 60 and 90 gallon round automated barrels with 26" - 27" grab diameter	MG17	$1,265
Power Take Off / Pump Options			
☐	Operate-in-gear-at-idle (OIGAI) Front Mount Tandem Vane Pump		STD
☐	Operate-in-gear-at-Idle (OIGAI) Front Mount Tandem Vane Pump - For Low Torque Engines		$255
☐	Operate-in-gear-at-idle (OIGAI) Remote Mount Tandem Vane Pump with Transmission Driven, Constant Duty PTO		$2,835
☐	Operate-in-gear-at-Idle (OIGAI) Remote Mount Tandem Vane Pump with Transmission Driven, Constant Duty PTO - For Low torque engines		$3,080
☐	890 Hot Shift PTO with Tandem Vane Pump		$4,615
☐	897 Constant Duty PTO with Tandem Vane Pump		$4,615
Lighting and Electrical Accessories			
☐	Hopper and Lift Work Light Kit - in-cab switch	L11	$450
☐	Peterson Multi-Function (SMART) LED Strobe / Turn Lamps - includes LED light package for entire unit	L10	$585
☐	Body Side Backing Assist Lights - reverse activated	L6	$485
☐	Dual Flashing 7" Amber LED Lights on Tailgate - mounted top	L7	$1,015
☐	Strobe Light, Amber - in-cab switch - mounted mid-tailgate	L4	$645
☐	Strobe Light, Amber - in-cab switch, pump on, and reverse activated - mounted mid-tailgate	L4	$645
☐	Dual Strobe Lights, Amber - in-cab switch - mounted mid-tailgate	L4	$930
Lift Controls, Options and Accessories			
☐	Lift Cycle Counter	CE8	$620
☐	Remote Lift Controls - mounted under seat on right hand side	CE9	$1,480
	*AutoPack is not available with Lever Controls		
Body Options			
☐	Observation Ladder - Mounted to street side of hopper		$1,000
☐	Heavy Duty Overlay Package - hopper, floor and sides, 48" into body (3/16" - 100,000 psi)		$3,140
☐	3" Hopper Drain Valve	B20	$330
☐	Mud Guards - steel - mounted ahead of rear tires	B8	$315
☐	Mud Flaps - anti-sail / anti-splash - ahead of rear tires	B7	$215
☐	Manual Hopper Cover - mesh expanded metal	B34	$1,165
☐	Pneumatic Hopper Cover		$4,045
☐	Rear Fenders for Single Rear Tire	B38	$645
☐	Rear Fenders for Tandem Rear Tires	B38	$1,075
☐	Continuously Welded Body Interior		$385
☐	20 lb. Fire Extinguisher with Bracket	B4	$477
☐	Tool Box (18" x 18" x 36") - frame mounted - available on 30 and 32 yard bodies ONLY	B5	$780
☐	Tool Box (18" x 18" x 24") - frame mounted - available on 24, 26, 30, and 32 yard bodies ONLY	B5	$735
☐	Tool Box (18" x 18" x 24") - bumper mounted - available on 22, 26, 30 and 32 yard bodies ONLY	B6	$735
☐	Hydraulic Pressure Gauge Kit (shipped loose in cab)	B2	$295
☐	Hydraulic Oil Tank Heater - 500 watts		$1,140
☐	Oil Temperature Gauge Kit		$645
☐	Dual High Pressure Filter Kit	B3	$1,725
☐	Rear Caution Decal	B24	$275
☐	Extended Tailgate Seal		$345
☐	Remote Lubrication System with Manifold for Packer		STD
☐	Sign Frame - J-Channel - 36" x 48"	B43	$365
☐	Sign Frame - J-Channel - 36" x 72"	B43	$435
☐	Sign Frame - J-Channel - 48" x 72" - not available on 16 and 20 yd. bodies	B43	$465
☐	Sign Frame - Roadway - 31.5" x 95.5" - only available on 30 and 32 yd. bodies	B44	$2,020
☐	Sign Frame - Structural Channel - 48" x 96" - only available on 30 and 32 yd. bodies	B45	$585
☐	Rear Tow Hooks		$425
☐	Spill Kit		$425
☐	Hydraulic Oil Tank Quick Disconnect Kit - For use with filter buggy		$785
☐	Hydraulic Tank Low Oil Level Warning Kit		$1,040

Effective January,1,2016 Liberty Sales Order Form

Camera Systems			
All camera systems are mounted with protective camera brackets and twin tailgate flood lights			
CAMERA MONITOR LOCATION WILL BE CAB ROOF MOUNTED			
Swivel monitor bracket will be provided for dual drive chassis			
360 ° Camera Systems and Options			
☐	360 Degree Camera Package - Includes 360 degree camera system (4 camera), DVR capability, Dash Camera, Operator Facing Camera, and Hopper Camera.		$9,863
☐	360 Base Camera System - Includes 360 (4 Camera System) for Monitoring Only		$8,113
☐	Add DVR for Recording Function - Includes Dash Camera for Road Facing View		$1,613
☐	Add Operator Facing Camera for Operator Monitoring		$369
☐	Add Hopper Camera		$994
3rd Eye Camera Systems			
☐	3rd Eye Single Camera with LCD Color Monitor		$2,445
☐	3rd Eye Double Camera with LCD Color Monitor		$3,767
☐	3rd Eye Triple Camera with LCD Color Monitor		$5,030
	Camera 1 Location - Mounted on Tailgate Facing Rear		
	Camera 2 Location - ☐ Left Hand Side Cab - ☐ Right Hand Side Cab - ☐ Hopper - ☐ Grabber		
	Camera 3 Location - ☐ Left Hand Side Cab - ☐ Right Hand Side Cab - ☐ Hopper - ☐ Grabber		
Load Cell Scale Systems			
☐	Heil Optimum Payload System (HOPS) using Air-Weigh Axle Scales	CE20	$8,400
☐	Air-Weigh Axle Scale System without Interlock	CE20	$7,836
Auxiliary Axles and Tires			
* NOTE: All axles MUST BE installed with tires so chassis can be re-certified to new GAWR and GVWR ratings			
☐	Watson & Chalin Self Steering Axle: 13,000 pound capacity, hub piloted or 20" spoke wheel hubs, automatic slack adjusters, type 16 air chambers, steering stabilizer kit and reverse lift kit - for pusher applications		$13,595
☐	Watson & Chalin Rigid Axle: 25,000 pound capacity, hub piloted or 20" spoke wheel hubs, 30/30 brake chambers, automatic slack adjusters, 1,300 cubic inch air tank and regulator kit - for pusher applications		$10,415
☐	Tag Axle Spill Shield - Prevents debris from collecting on the tag axle - If applicable with body chassis combination		$300
☐	255/70R-22.5 - load range H, 5,510 pound single max load at 120 psi with rim - 2 tires installed		$2,155
☐	275/70R-22.5 - load range H, 7,000 pound single max load at 120 psi with rim - 2 tires installed		$2,725
☐	11 R-22.5 - load range H, 6,610 pound single max load at 120 psi with rim - 2 tires installed		$2,295
* Note: All auxiliary applications must be approved by Heil prior to order acceptance			
CNG Installation - Top of Body Installation			
☐	CNG Installation Charge - Includes brackets, hardware, and mounting of CNG system		$5,405
Extended Warranty			
☐	Five (5) Year (Maximum 10,000 hrs. of Operation) Cylinder Warranty		$11,050
Paint Options			
NOTE: LIST PAINT CODES ON PAINT DIAGRAM			
☐	Customized Paint Color - Paint Color Code NOT included in the Color Smart Brochure		$375
☐	Customized Lift Paint - Any color other than Visibility Yellow (Standard)		$315
☐	Two Tone Paint		$1,420
☐	Paint Striping - first stripe		$1,200
☐	Paint Striping - each additional stripe		$670
☐	Metallic Paint		$1,200
☐	Clear coat Finish		$1,620
☐	Anti-Graffiti Clear coat Finish		$2,400
☐	Prime Paint Only - deduct		($1,220)
TOTALS			
	Total from Options Above (MSRP)		**$0**
	Additional Options (SOARs, Chassis Mods, Etc.) Total		
	Subtotal		**$0**
	Dealer Discount (%)	**0%**	**$0**
	Dealer Net Price		**$0**
	Additional Discount (SPR)		
	Freight		
	Total Price per Unit		**$0**

Liberty™

Paint Stripe & Accessories Requirements

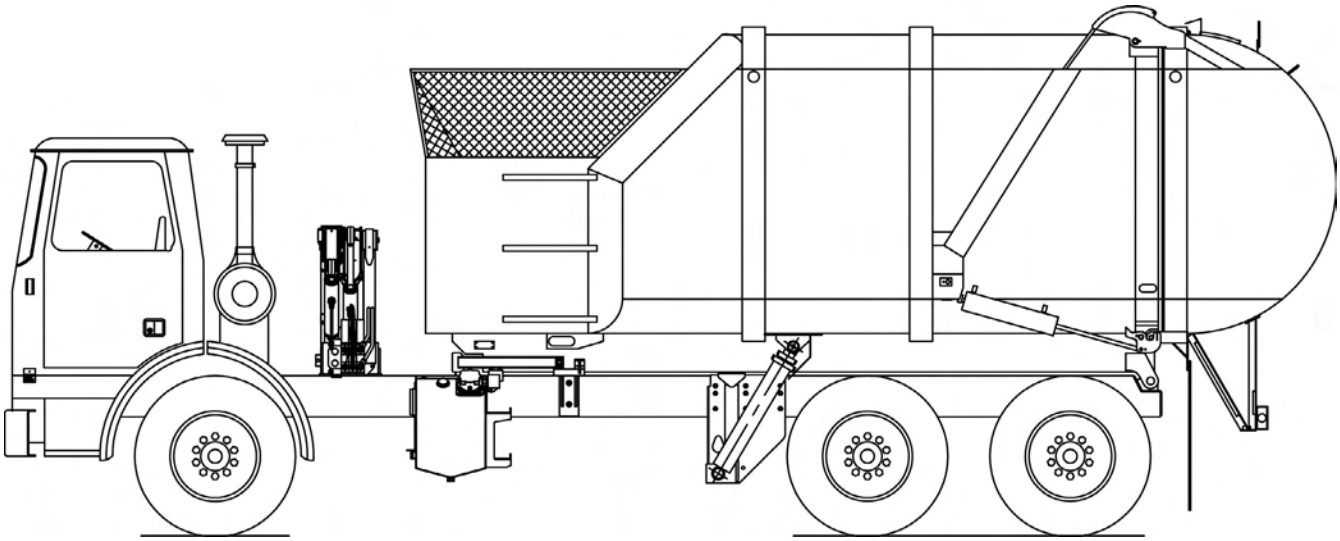

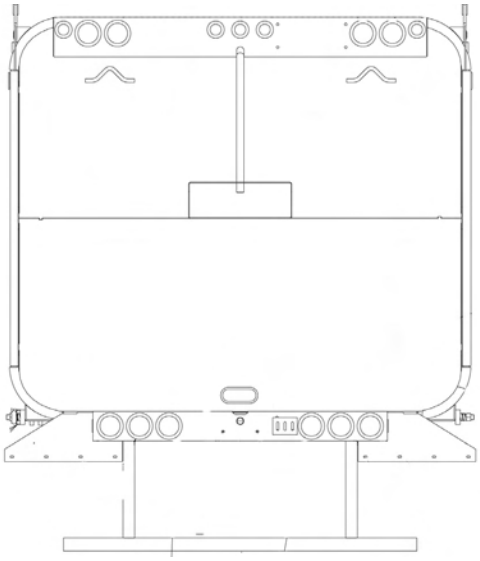

Paint and options layout detail
Use this form to describe paint schemes
Be specific about dimensions and details

Sales Order #		Submitted by	
Customer			
Paint Color 1			
Paint Color 2			
Paint Color 3			
Chassis Make			
Chassis Model			
Wheelbase			
Body Size		Approved by	

MultiPack®

High-Performance Rear Automated Side Loader

Standard Equipment Features included in Base Price

- 5.2 yd ³ front hopper
- 3.94yd ³ rear hopper
- 108 in. lift reach
- Lift capacity up to 800 lbs.
- Python Lift - 2 year limited structural warranty
- DuraPack® 5000 tailgate
- Street side access door with step and grab
- Under hopper liquid sump with 2 clean-out doors and steel rake
- Tailgate service props
- Tailgate turnbuckle kit
- O.I.G.A.I front mount tandem vane pump system
- Cushioned up and down chrome-plated rods
- Chassis frame-mounted oil tank with level / temperature gauge and suction shut-off valve
- 3-micron return line filter with magnetic trap and in-cab filter bypass monitor
- 100-micron suction line strainer
- Fabric guard hose protection for all high-pressure hoses
- In-cab packing controls, electric/air
- In-cab lift controls, air/electric, joystick
- In-cab eject controls, electric/air
- In-cab tailgate controls, air
- Cortex Controller™ with InSight™ diagnostic display
- In-cab function and indicator lights
- Select-O-Pack
- AutoLift™
- Arm rest
- Lift reach warning
- Backup alarm
- Backup and license plate lights
- LED center mounted brake light
- LED duplicate high and low mount stop, turn, and tail lights
- LED mid-body turn signals
- LED FMVSS #108 clearance lights and reflectors
- ICC reflective tape
- Rear underride guard
- Rear camera bracket and flood lights - reverse activated
- Body undercoating
- Customer's choice of one color finish paint from ColorSmart brochure
- Standard 1-year (2,000 hours of operation) warranty
- ANSI Z 245.1-2012 Compliant
- Cavity coat and joint sealer
- Remote packer lube kit
- 5 lb. In-Cab Fire Extinguisher
- Safety Triangle

Effective January,1,2016 MultiPack Sales Order Form

Base Units MultiPack			
☐	24 cubic yard		$154,752
	EJECT		
Hopper Size		Front	5.2 yd³
		Rear	3.9 yd³
CHASSIS MUST COMFORM WITH HEIL'S MOST CURRENT CHASSIS SPECIFICATIONS AT WWW.HEIL.COM			
* NOTE: Red numbers reference Option Photo Index			
Mounting Options			
☐	Full Factory Mount		$5,685
☐	Mount at Dealer Destination		$705
Grabber and Lift Options			
☐	TriCuff Grabber - handles a variety of 30 to 110 gallon square, rectangular and round semi-automated and automated barrels	MG16	$1,265
☐	TriCuff Grip Rite Grabber - handles a variety of 30 to 110 gallon square, rectangular and round semi-automated and automated barrels. No Spring Tensioner		$1,265
☐	Belt Grabbers with Spring Loaded Inner Arm - to accommodate 60/90 gallon round automated barrels	MG15	$1,265
☐	Universal Belt Grabbers with Spring Loaded Inner Arm - to accommodate 90 - 300 gallon round automated barrels	MG18	$1,265
☐	Changeable Spring Steel Grabbers - for 60 and 90 gallon round automated barrels with 26" - 27" grab diameter	MG17	$1,265
☐	Changeable Spring Steel Grabbers - for 300 gallon round automated barrels with 41" - 43" grab diameter	MG17	$1,265
☐	Grabber Interlock Kit - prevents lift raise with grabbers in open position and grabbers opening in the lift raised position		$1,145
Grabber storage bracket supplied at no charge when any TWO sets of spring steel grabbers are ordered			
Reduces hopper capacity by 1.2 yd3			
Power Take Off / Pump Options			
☐	Operate-in-gear-at-idle (OIGAI) Front Mount Vane Pump		STD
Lift Controls, Options and Accessories			
☐	Remote Lift Controls - air toggles - mounted under seat on right hand side	CE9	$1,480
☐	Additional Joystick Control for Lift - mounted in-cab	CE10	$1,715
Lighting and Electrical Accessories			
☐	Front Hopper and Lift Work Light Kit - two lights - in-cab switch	L11	$455
☐	Tailgate Hopper Work Light Kit - in-cab switch	L1	$335
☐	Peterson Multi-Function (SMART) LED Strobe / Turn Lamps - includes LED light package for entire unit	L10	$585
☐	Body Side Backing Assist Lights - reverse activated	L6	$485
☐	Strobe Light, Amber - upper LH corner of tailgate - in-cab switch	L4	$645
☐	Strobe Light, Amber - in-cab switch - Front of Body	L4	$645
☐	Dual Front Oval LED Strobes		$740
☐	Left Hand Buzzer Kit	CE1	$165
Container Handling / Cart Tipper Options			
☐	12,000 Pound Line Pull Drum Winch with Control Kit *	MG9	$5,610
☐	15,000 lb. Line Pull Reeving Cylinder with Control Kit - non-recessed	MG3	$6,230
☐	Adjustable Roll Bar with Control Kit	MG4	$3,810
☐	Arm Mechanism with Control Kit	MG5	$5,610
All of the above mechanisms require the latch kit below			
Riding steps cannot be supplied with Arm Mechanism option			
☐	Lip and Latch Kit	MG6	$1,075
Latch kit with vertical slots available for arm mechanism			
☐	Single Control Valve Section with Control Handle	MG2	$1,275
☐	Double Control Valve Section with Control Handles	MG2	$1,950
Body Options			
☐	Front Hopper and Body Floor Liner (3/16" - 150,000 psi)		$1,320
☐	Severe Duty Packer Wear Bar Kit - hopper only		$820
☐	3" Hopper Drain Valve	B20	$330
☐	Mud Guards - steel - mounted ahead of rear tires	B8	$315
☐	Mud Flaps - anti-sail / anti-splash - ahead of rear tires	B7	$215
☐	Manual Hopper Cover - mesh expanded metal	B33	$1,165
☐	Manual Hopper Cover for use with Hopper Hood		$1,165
☐	Hopper Hood - not available with 300 gallon grabbers	B35	$1,900
☐	20 lb. Fire Extinguisher with Bracket	B4	$480
☐	Dual 20 lb. Fire Extinguishers with Bracket		$955
☐	Tool Box (18" x 18" x 36") - frame mounted	B5	$780
☐	Tool Box (18" x 18" x 24") - frame mounted	B6	$735
☐	Hydraulic Pressure Gauge Kit (shipped loose in cab)	B2	$295
☐	Hydraulic Oil Tank Heater - 500 watts		$1,140
☐	Hydraulic Tank Low Oil Level Warning Kit		$1,040

Effective January,1,2016 MultiPack Sales Order Form

☐	Dual High Pressure Filter Kit	B3	$1,725
☐	Tailgate Side Spill Troughs	B13	$705
☐	Hydraulic Oil Tank Quick Disconnect Kit - For use with filter buggy		$785
☐	Spill Kit		$325
☐	Fender Extension Kit		$695
☐	Sump Chutes		$445
☐	Infinity Series Packer/Eject Cylinders with scrapers and hardened rods to 50 HRC by Rosenboom - Includes Five (5) Year Packer/Eject Cylinder Warranty covering dents and dings		$2,935
Note: Hopper hood may not be ordered in conjunction with a sliding top door			
Camera Systems			
All camera systems are mounted with protective camera brackets and twin tailgate flood lights			
CAMERA MONITOR LOCATION WILL BE CAB ROOF MOUNTED Swivel monitor bracket will be provided for dual drive chassis			
360 ° Camera Systems and Options			
☐	360 Degree Camera Package - Includes 360 degree camera system (4 camera), DVR capability, Dash Camera, Operator Facing Camera, Hopper Camera, and WIFI Capability		$9,863
☐	360 Base Camera System - Includes 360 (4 Camera System) for Monitoring Only		$8,113
☐	Add DVR for Recording Function - Includes Dash Camera for Road Facing View		$1,613
☐	Add Operator Facing Camera for Operator Monitoring		$369
☐	Add Hopper Camera		$994
3rd Eye Camera Systems			
☐	3rd Eye Single Camera with LCD Color Monitor		$2,445
☐	3rd Eye Double Camera with LCD Color Monitor		$3,767
☐	3rd Eye Triple Camera with LCD Color Monitor		$5,030
	Camera 1 Location - Mounted on Tailgate Facing Rear		
	Camera 2 Location - Choose: ☐ Left Hand Side Cab - ☐ Right Hand Side Cab - ☐ Hopper		
	Camera 3 Location - Choose: ☐ Left Hand Side Cab - ☐ Right Hand Side Cab - ☐ Hopper		
Load Cell Scale Systems			
☐	Heil Optimum Payload System (HOPS) using Air-Weigh Axle Scales	CE20	$8,400
☐	Air-Weigh Axle Scale System without Interlock	CE20	$7,836
Auxiliary Axles and Tires			
* NOTE: All axles MUST BE installed with tires so chassis can be re-certified to new GAWR and GVWR ratings			
☑	Watson & Chalin Rigid Axle: 25,000 pound capacity, hub piloted or 20" spoke wheel hubs, 30/30 brake chambers, automatic slack adjusters, 1,300 cubic inch air tank and regulator kit - for pusher applications		$10,415
☐	255/70R-22.5 - load range H, 5,510 pound single max load at 120 psi with rim - 2 tires installed		$2,155
☐	275/70R-22.5 - load range H, 7,000 pound single max load at 120 psi with rim - 2 tires installed		$2,725
☐	11 R-22.5 - load range H, 6,610 pound single max load at 120 psi with rim - 2 tires installed		$2,295
* Note: All auxiliary applications must be approved by Heil prior to order acceptance			
CNG Installation - Top of Body Installation			
☐	CNG Installation Charge - Includes brackets, hardware, and mounting of CNG system		$5,405
Extended Warranty			
☐	Five (5) Year (Maximum 10,000 hrs. of Operation) All other Non-Infinity Cylinder Warranty - Requires purchase of Infinity packer or eject Cylinders from above		$8,115
Paint Options			
NOTE: LIST PAINT CODES ON PAINT DIAGRAM			
☐	Customized Paint Color - Paint Color Code NOT included in the Color Smart Brochure		$375
☐	Customized Lift Paint - Any color other than Visibility Yellow (Standard)		$315
☐	Two Tone Paint		$1,430
☐	Paint Striping - first stripe		$1,200
☐	Paint Striping - each additional stripe		$670
☐	Metallic Paint		$1,200
☐	Clear coat Finish		$1,700
☐	Anti-Graffiti Clear coat Finish		$2,400
☐	Prime Paint Only - deduct		($1,220)
TOTALS			
	Total from Options Above (MSRP)		**$0**
	Additional Options (SOARs, Chassis Mods, Etc.) Total		

Effective January,1,2016 MultiPack Sales Order Form

	Subtotal		$0
	Dealer Discount (%)	0%	$0
	Dealer Net Price		$0
	Additional Discount (SPR)		
	Freight		
	Total Price per Unit		$0

MULTIPACK®

Paint Stripe & Accessories Requirements

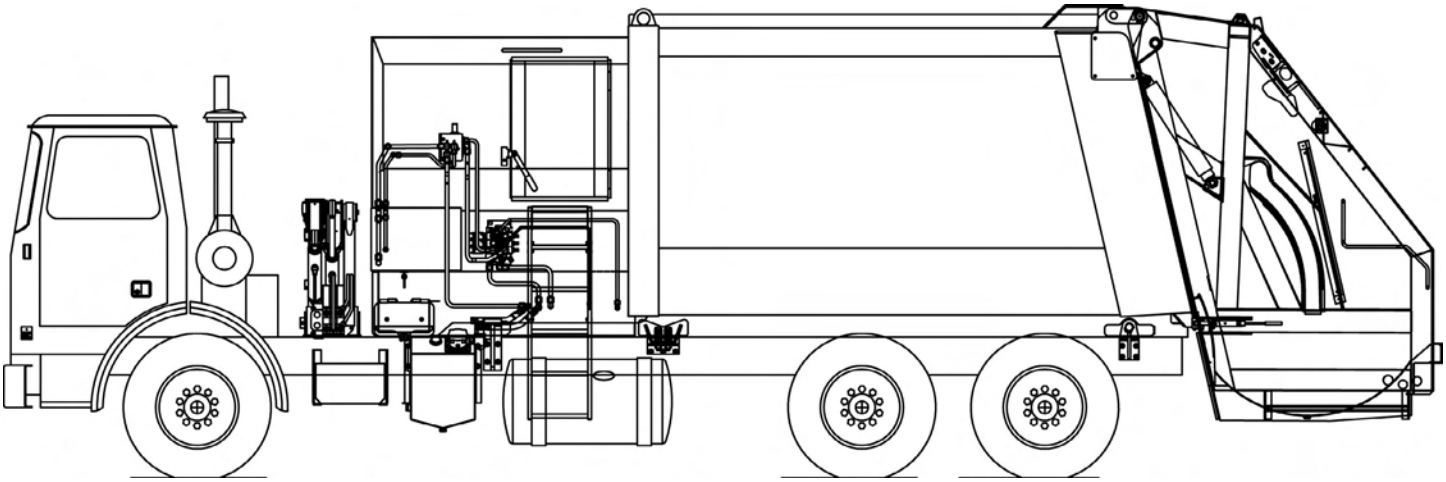

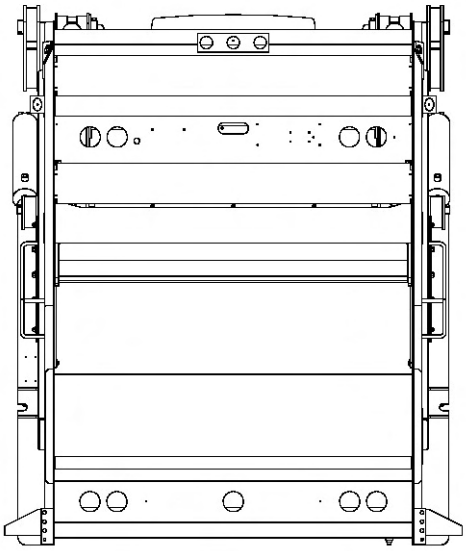

PAINT AND OPTIONS LAYOUT DETAIL
USE THIS FORM TO DESCRIBE PAINT SCHEMES
BE SPECIFIC ABOUT DIMENSIONS AND DETAILS

Sales Order #		Submitted by	
Customer			
Paint Color 1			
Paint Color 2			
Paint Color 3			
Chassis Make			
Chassis Model			
Wheelbase			
Body Size		Approved by	

Rapid Rail®

Continuous–Pack Automated Side Loader

Standard Equipment Features included in Base Price

- 3.0yd^3 hopper (self-cleaning)
- 96 in. lift reach
- Lift capacity up to 1600 lbs.
- Body service props
- Tailgate service props
- Fully automatic tailgate latches
- Grease zerks - for entire system only
- O.I.G.A.I. front mount tandem vane pump system
- Lift cylinders cushioned up and dow n w ith chrome plated rods
- Chassis frame-mounted oil tank w ith level/temperature gauge and oil suction shut-off valve
- 3-micron return line filter w ith magnetic trap and in-cab filter bypass monitor
- 100-micron suction line strainer
- Fabric guard hose protection for all high pressure hoses
- In-cab packing controls, electric
- Electric in-cab lift controls, rocker style
- Electri in-cab hoist controls
- Cortex Controller™ w ith In-Sight™ dianostic display
- In-cab tailgate controls, electric
- In-cab function and indicator lights
- Lift reach w arning
- Backup alarm
- Backup and license plate lights
- LED Center mounted brake light
- LED Duplicate high and low mount stop, turn, and tail lights
- LED Mid-body turn signals
- LED FMVSS #108 clearance lights and reflectors
- ICC reflective tape
- Rear mud flaps - anti-sail/anti-splash
- Rear underride guard
- Rear camera bracket and flood lights - reverse activated
- Customer's choice of one color finish paint from ColorSmart brochure
- Standard 1-year (2,000 hours of operator) w arranty
- ANSI Z 245.1-2012 Compliant
- Cavity coat and joint sealer
- Inside-body front closure
- Outside mounted upper packer lube line
- Safety Triangle
- 5 lb. In-Cab Fire Extinguisher
- 6 roller carriage

Environmental Solutions Group
A DOVER COMPANY

Effective January,1,2016 Rapid Rail Sales Order Form

Base Units Rapid Rail - DUMP ONLY			
☐	16 cubic yard		$105,131
☐	20 cubic yard		$107,120
☐	22 cubic yard		$108,110
☐	24 cubic yard		$109,109
☐	26 cubic yard		$110,114
☐	30 cubic yard		$112,093
☐	32 cubic yard		$114,276
Hopper Size			3 yd³
CHASSIS MUST COMFORM WITH HEIL'S MOST CURRENT CHASSIS SPECIFICATIONS AT WWW.HEIL.COM			
* NOTE: Red numbers reference Option Photo Index			
Mounting Options			
☐	Full Factory Mount		$5,685
☐	Mount at Dealer Destination		$705
Grabber and Lift Options			
☐	TriCuff Grabber - handles a variety of 30 to 110 gallon square, rectangular and round semi-automated and automated barrels	MG16	$1,265
☐	TriCuff Grip Rite Grabber - handles a variety of 30 to 110 gallon square, rectangular and round semi-automated and automated barrels. No Spring Tensioner		$1,265
☐	Belt Grabbers with Spring Loaded Inner Arm - to accommodate 60/90 gallon round automated barrels	MG15	$1,265
☐	Universal Belt Grabbers with Spring Loaded Inner Arm - to accommodate 90 - 300 * gallon round automated barrels	MG18	$1,265
☐	Changeable Spring Steel Grabbers - for 60 and 90 gallon round automated barrels with 26" - 27" grab diameter	MG17	$1,265
☐	Changeable Spring Steel Grabbers - for 300 * gallon round automated barrels with 41" - 43" grab diameter	MG17	$1,265
Grabber storage bracket supplied at no charge when any TWO sets of spring steel grabbers are ordered			
Not available on 16 yard bodies			
Power Take Off / Pump Options			
☐	Operate-in-gear-at-idle (OIGAI) Front Mount Tandem Vane Pump		STD
☐	Operate-in-Neutral Front Mount Tandem Vane Pump		$0
☐	Operate-in-gear-at-idle (OIGAI) Remote Mount Tandem Vane Pump with Transmission Driven, Constant Duty PTO		$2,835
☐	Operate-in-Neutral Direct Mount Vane Pump with Hot Shift PTO		$2,835
☐	890 Hot Shift PTO with Tandem Vane Pump		$4,615
☐	897 Constant Duty PTO with Tandem Vane Pump		$4,615
Lighting and Electrical Accessories			
☐	Hopper and Lift Work Light Kit - two lights - in-cab switch	L11	$455
☐	Peterson Multi-Function (SMART) LED Strobe / Turn Lamps - includes LED light package for entire unit	L10	$585
☐	Body Side Backing Assist Lights - reverse activated	L6	$485
☐	Dual Flashing 7" Amber LED Lights on Tailgate - mounted top	L7	$1,015
☐	Strobe Light, Amber - in-cab switch - mounted mid-tailgate	L4	$645
☐	Strobe Light, Amber - in-cab switch, pump on, and reverse activated - mounted mid-tailgate	L4	$645
☐	Dual Strobe Lights, Amber - in-cab switch - mounted mid-tailgate	L4	$930
Lift Controls, Options and Accessories			
☐	Lift Activated Force to Neutral System (requires Allison World transmission package 168 or 170 - see bulletin #341) - applies to non-O.I.G.A.I. pump systems only		$980
☐	Lift Cycle Counter	CE8	$620
☐	Joystick Control with Rocker Switch for Lift Only in addition to standard 4-button rocker switch controls	CE13	$1,170
☐	In-Cab Remote Rocker Switch Control Kit for Lift Only	CE15	$1,170
☐	Lift Feathering Kit - for O.I.G.A.I. only		$775
Body Options			
☐	Observation Ladder - Mounted to street side of hopper		$1,000
☐	Heavy Duty Overlay Package - hopper floor and sides, 48" into body (3/16" - 100,000 psi)		$3,140
☐	3" Hopper Drain Valve	B20	$330
☐	Mud Guards - steel - mounted ahead of rear tires	B8	$315
☐	Mud Flaps - anti-sail / anti-splash - ahead of rear tires	B7	$215
☐	Manual Hopper Cover - mesh expanded metal	B34	$1,165
☐	Pneumatic Hopper Cover		$4,045
☐	Solid Hopper Upper Extension - available on 30 and 32 yard bodies ONLY	B37	$675
☐	Rear Fenders for Single Rear Tire	B38	$645
☐	Rear Fenders for Tandem Rear Tires	B38	$1,075
☐	Continuously Welded Body Interior		$385
☐	20 lb. Fire Extinguisher with Bracket	B4	$480
☐	Tool Box (18" x 18" x 36") - frame mounted - available on 30 and 32 yard bodies ONLY	B5	$780
☐	Tool Box (18" x 18" x 24") - frame mounted - available on 24, 26, 30, and 32 yard bodies ONLY	B5	$735
☐	Tool Box (18" x 18" x 24") - bumper mounted - available on 22, 26, 30 and 32 yard bodies ONLY	B6	$735
☐	Hydraulic Pressure Gauge Kit (shipped loose in cab)	B2	$295
☐	Hydraulic Oil Tank Heater - 500 watts		$1,140
☐	Oil Temperature Gauge Kit		$645
☐	Dual High Pressure Filter Kit	B3	$1,725
☐	Extended Tailgate Seal		$345
☐	Remote Lubrication System with Manifold for Packer		$0
☐	Sign Frame - J-Channel - 36" x 48"	B43	$365
☐	Sign Frame - J-Channel - 36" x 72"	B43	$435
☐	Sign Frame - J-Channel - 48" x 72" - not available on 16 and 20 yd. bodies	B43	$465
☐	Sign Frame - Roadway - 31.5" x 95.5" - only available on 30 and 32 yd. bodies	B44	$2,020
☐	Sign Frame - Structural Channel - 48" x 96" - only available on 30 and 32 yd. bodies	B45	$585
☐	Rear Tow Hooks		$425
☐	Rear Caution Decal	B24	$275
☐	Spill Kit		$325
☐	Battery Box mounted behind grabbers		$900
☐	Hydraulic Oil Tank Quick Disconnect Kit - For use with filter buggy		$785
☐	Hydraulic Tank Low Oil Level Warning Kit		$1,040

Effective January,1,2016 Rapid Rail Sales Order Form

Organics Option			
☐	Reduced Pack Cycle Programming for Organics Collection		$0
☐	Extended Tailgate Seal		$345
Camera Systems			
All camera systems are mounted with protective camera brackets and twin tailgate flood lights			
CAMERA MONITOR LOCATION WILL BE CAB ROOF MOUNTED			
Swivel monitor bracket will be provided for dual drive chassis			
360 ˚ Camera Systems and Options			
☐	360 Degree Camera Package - Includes 360 degree camera system (4 camera), DVR capability, Dash Camera, Operator Facing Camera, and Hopper Camera.		$9,863
☐	360 Base Camera System - Includes 360 (4 Camera System) for Monitoring Only		$8,113
☐	Add DVR for Recording Function - Includes Dash Camera for Road Facing View		$1,613
☐	Add Operator Facing Camera for Operator Monitoring		$369
☐	Add Hopper Camera		$994
3rd Eye Camera Systems			
☐	3rd Eye Single Camera with LCD Color Monitor		$2,445
☐	3rd Eye Double Camera with LCD Color Monitor		$3,767
☐	3rd Eye Triple Camera with LCD Color Monitor		$5,030
	Camera 1 Location - Mounted on Tailgate Facing Rear		
	Camera 2 Location - ☐ Left Hand Side Cab - ☐ Right Hand Side Cab - ☐ Hopper - ☐ Grabber		
	Camera 3 Location - ☐ Left Hand Side Cab - ☐ Right Hand Side Cab - ☐ Hopper - ☐ Grabber		
Load Cell Scale Systems			
☐	Heil Optimum Payload System (HOPS) using Air-Weigh Axle Scales	CE20	$8,400
☐	Air-Weigh Axle Scale System without Interlock	CE20	$7,836
Auxiliary Axles and Tires			
* NOTE: All axles MUST BE installed with tires so chassis can be re-certified to new GAWR and GVWR ratings			
☐	Watson & Chalin Self Steering Axle: 13,000 pound capacity, hub piloted or 20" spoke wheel hubs, automatic slack adjusters, type 16 air chambers, steering stabilizer kit and reverse lift kit - for pusher applications		$13,595
☐	Watson & Chalin Rigid Axle: 25,000 pound capacity, hub piloted or 20" spoke wheel hubs, 30/30 brake chambers, automatic slack adjusters, 1,300 cubic inch air tank and regulator kit - for pusher applications		$10,415
☐	Tag Axle Spill Shield - Prevents debris from collecting on the tag axle - If applicable with body chassis combination		$300
☐	255/70R-22.5 - load range H, 5,510 pound single max load at 120 psi with rim - 2 tires installed		$2,155
☐	275/70R-22.5 - load range H, 7,000 pound single max load at 120 psi with rim - 2 tires installed		$2,725
☐	11 R-22.5 - load range H, 6,610 pound single max load at 120 psi with rim - 2 tires installed		$2,295
* Note: All auxiliary applications must be approved by Heil prior to order acceptance			
CNG Installation - Top of Body Installation			
☐	CNG Installation Charge - Includes brackets, hardware, and mounting of CNG system		$5,405
Extended Warranty			
☐	Five (5) Year (Maximum 10,000 hrs. of Operation) Cylinder Warranty		$11,050
Paint Options			
NOTE: LIST PAINT CODES ON PAINT DIAGRAM			
☐	Customized Paint Color - Paint Color Code NOT included in the Color Smart Brochure		$375
☐	Customized Lift Paint - Any color other than Visibility Yellow (Standard)		$315
☐	Two Tone Paint		$1,430
☐	Paint Striping - first stripe		$1,200
☐	Paint Striping - each additional stripe		$670
☐	Metallic Paint		$1,200
☐	Clear coat Finish		$1,700
☐	Anti-Graffiti Clear coat Finish		$2,340
☐	Prime Paint Only - deduct		($1,220)
TOTALS			
	Total from Options Above (MSRP)		**$0**
	Additional Options (SOARs, Chassis Mods, Etc.) Total		
	Subtotal		**$0**
	Dealer Discount (%)	**0%**	**$0**
	Dealer Net Price		**$0**
	Additional Discount (SPR)		
	Freight		
	Total Price per Unit		**$0**

RAPID RAIL®

Paint Stripe & Accessories Requirements

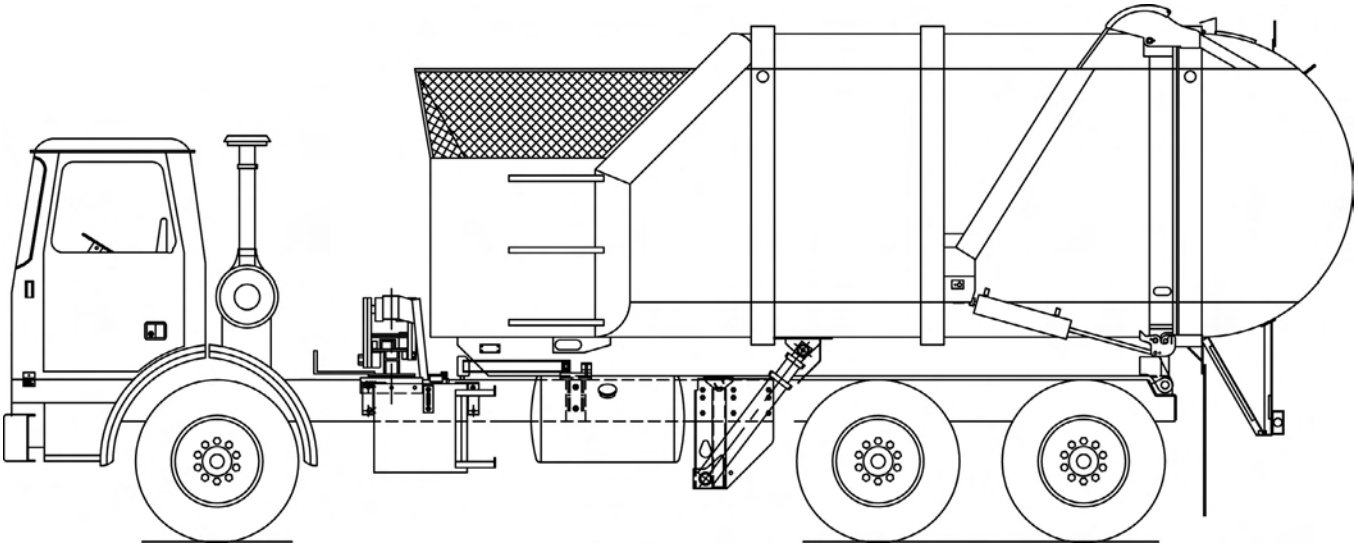

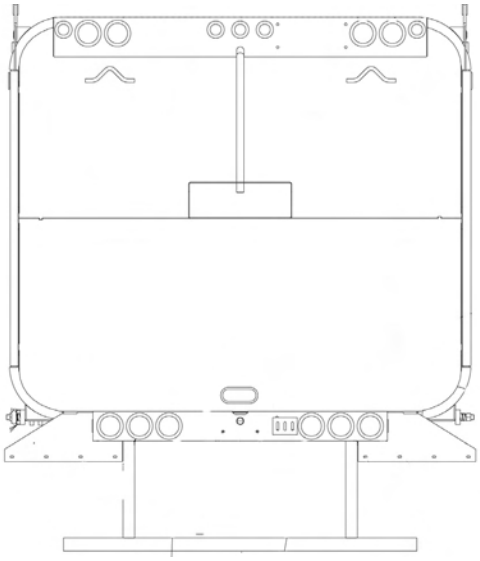

PAINT AND OPTIONS LAYOUT DETAIL
USE THIS FORM TO DESCRIBE PAINT SCHEMES
BE SPECIFIC ABOUT DIMENSIONS AND DETAILS

Sales Order #		Submitted by	
Customer			
Paint Color 1			
Paint Color 2			
Paint Color 3			
Chassis Make			
Chassis Model			
Wheelbase			
Body Size		Approved by	

STARR® System

Semi-Trailer Automated Rapid Rail

Standard Equipment Features included in Base Price

- 3.0yd^3 hopper (self-cleaning)
- 96 in. lift reach
- 1,600 lb. lift capacity
- Tri-cuff grabbers
- Trailerized body
- Conventional quick connectors for trailer hydraulics, lights, and air brakes
- Integral body hoist mechanism
- ABS air brakes
- Crank-down landing legs
- Upper 5th wheel plate with king pin
- Tires - four (4) x 11.00 R 22.5 load range H
- 22.5 x 8.25 white wheels - steel
- 23,000 pound suspension
- Manual hopper cover - expanded metal
- Body service props
- Tailgate service props
- Fully automatic Shur-Lock™ tailgate latches
- Grease zerks - for entire system only
- O.I.G.A.I. front mount tandem vane pump system
- Lift cylinders cushioned up and down with chrome plated rods
- Chassis frame-mounted oil tank with level/temperature sight gauge and oil suction shut-off valve
- 3-micron return line filter with magnetic trap and in-cab filter bypass monitor
- Cortex Controller™ with In-Sight™ dianostic display
- Fabric guard hose protection for all high pressure hoses
- In-cab electrical pack controls
- Electric in-cab lift controls, rocker style
- In-cab electrical hoist and tailgate controls
- In-cab function and indicator lights
- Electronic overspeed programming
- Lift reach warning
- Backup alarm
- Backup and license plate light
- LED Center mounted brake light
- LED Duplicate high and low mount stop, turn, and tail lights
- LED Mid-body turn signals
- LED FMVSS #108 clearance lights and reflectors
- ICC reflective tape
- Rear mud flaps - anti-sail/anti-splash
- Rear underride guard
- Rear camera bracket and flood lights - reverse activated
- Customer's choice of one color finish paint from ColorSmart brochure
- Standard 1-year (2,000 hours of operator) warranty
- ANSI Z 245.1-2012 Compliant
- Cavity coat and joint sealer
- Inisde-body front closure
- Outside mounted upper packer lube line
- Safety Triangle
- 5 lb. In-Cab Fire Extinguisher

Effective January,1,2016 STARR Sales Order Form

	Base Units STARR System		
☐	33 cubic yard - STARR with Lift, Trailer and TriCuff Grabber		$156,182
☐	37 cubic yard - STARR with Lift, Trailer and TriCuff Grabber		$158,161
☐	33 cubic yard - STARR Trailer Body Only		$101,898
☐	33 cubic yard - STARR Trailer Body Only with Tandem Trailer Setup Kit for Pulling a Second Trailer		$134,339
☐	37 cubic yard - STARR Trailer Body Only		$103,887
☐	37 cubic yard - STARR Trailer Body Only with Tandem Trailer Setup Kit for Pulling a Second Trailer		$136,328
☐	33 cubic yard - STARR Tandem Trailer - Includes Two (2) Trailers, STARR Dolly Assembly, and Tandem Trailer Setup Kit		$289,037
☐	37 cubic yard - STARR Tandem Trailer - Includes Two (2) Trailers, STARR Dolly Assembly, and Tandem Trailer Setup Kit		$293,010
☐	STARR Lift Assembly Only - unmounted with TriCuff Grabber *		$56,396
☐	STARR Dolly Assembly Only - for pulling trailers as doubles - Includes Tandem Trailer Setup Kit		$25,148
* includes lift, controls, oil tank, standard front mount pump and all necessary mounting hardware			
Hopper Size			3 yd³
CHASSIS MUST COMFORM WITH HEIL'S MOST CURRENT CHASSIS SPECIFICATIONS AT WWW.HEIL.COM			
* NOTE: Red numbers reference Option Photo Index			
	Dolly Assembly		
	23,000 Pound Suspension		STD
	ABS Air Brakes		STD
	Painted Black		STD
	Pintle Hook Hitching System with Safety Chains		STD
	Lower 5th Wheel Plate		STD
	Tires - four (4) x 11.00 R 22.5 load range H		STD
	22.5 x 8.25 White Wheels - steel		STD
	Mounting Options		
☐	Full Factory Mount of STARR Loader and Associated Components		$3,720
	Grabber and Lift Options		
☐	STARR - 90 gallon Belt Grabber in lieu of TriCuff Grabber		$0
	Power Take Off / Pump Options		
☐	Operate-in-gear-at-idle (OIGAI) Front Mount Tandem Vane Pump		STD
☐	Operate-in-Neutral Front Mount Tandem Vane Pump		$0
☐	Operate-in-gear-at-idle (OIGAI) Remote Mount Vane Pump with Transmission Driven, Constant Duty PTO		$1,225
☐	Operate-in-Neutral Direct Mount Vane Pump - deduct		$0
☐	Hot Shift PTO with Over speed Protection		$2,835
	Lighting and Electrical Accessories (For Tandem Trailers Double the Quantities and Price)		
☐	Hopper and Lift Work Light Kit - two lights - in-cab switch	L11	$450
☐	Peterson Multi-Function (SMART) LED Strobe / Turn Lamps - includes LED light package for entire unit	L10	$585
☐	Strobe Light, Amber - in-cab switch - mounted upper tailgate	L4	$645
☐	Dual Flashing 7" Amber LED Lights on Tailgate - mounted mid-height	L7	$1,015
☐	Strobe Light, Amber - in-cab switch, pump on, and reverse activated - mounted upper tailgate	L4	$645
☐	Dual Strobe Lights, Amber - in-cab switch - mounted upper tailgate	L4	$930
	Lift Controls, Options and Accessories		
☐	Lift Activated Force to Neutral System (requires Allison World transmission package 168 or 170 - see bulletin #341) - applies to non-O.I.G.A.I. pump systems only		$980
☐	Lift Cycle Counter	CE8	$620
☐	Joystick Control with Rocker Switch for Lift Only in addition to standard 4-button rocker switch controls	CE13	$1,170
☐	In-Cab Remote Rocker Switch Control Kit for Lift Only	CE15	$1,170
☐	Lift Feathering Kit - for O.I.G.A.I. only		$775
	Body Options and Accessories (For Tandem Trailers Double the Quantities and Price)		
☐	Observation Ladder - Mounted to street side of hopper		$1,000
☐	Heavy Duty Overlay Package - hopper, floor and sides, 48" into body (3/16" - 100,000 psi)		$3,140
☐	3" Hopper Drain Valve	B20	$330
☐	Rear Fenders for Single Rear Tire	B38	$645
☐	Manual Hopper Cover - mesh expanded metal	B34	STD
☐	Pneumatic Hopper Cover		$4,045
☐	Continuously Welded Body Interior		$385
☐	20 lb. Fire Extinguisher with Bracket	B4	$477
☐	Tool Box (18" x 18" x 36") - frame mounted - available on 30 and 32 yard bodies ONLY	B5	$780
☐	Tool Box (18" x 18" x 24") - frame mounted - available on 24, 26, 30, and 32 yard bodies ONLY	B5	$735
☐	Hydraulic Oil Tank Heater - 500 watts		$1,140
☐	Dual High Pressure Filter Kit	B3	$1,725
☐	Hydraulic Pressure Gauge Kit (shipped loose in cab)		$295
☐	Remote Lubrication System with Manifold for Packer		$0
☐	Extended Tailgate Seal		$345
☐	Tandem Trailer Set-Up Kit - required for each trailer when pulling doubles *		$3,710
☐	Sign Frame - J-Channel - 36" x 48"	B43	$365
☐	Sign Frame - J-Channel - 36" x 72"	B43	$435
☐	Sign Frame - J-Channel - 48" x 72"	B43	$465
☐	Sign Frame - Roadway - 31.5" x 95.5"	B44	$2,020
☐	Sign Frame - Structural Channel - 48" x 96" - only available on 30 and 32 yd. bodies	B45	$585
☐	Rear Caution Decal	B24	$275
☐	Spill Kit		$325
☐	Hydraulic Oil Tank Quick Disconnect Kit - For use with filter buggy		$785
☐	Hydraulic Tank Low Oil Level Warning Kit		$1,040
☐	Rear Fenders for Trailer		$620
* STARR dolly assembly also required in order to pull doubles			

Effective January,1,2016 STARR Sales Order Form

Camera Systems			
All camera systems are mounted with protective camera brackets and twin tailgate flood lights			
CAMERA MONITOR LOCATION WILL BE CAB ROOF MOUNTED			
Swivel monitor bracket will be provided for dual drive chassis			
3rd Eye Camera Systems			
☐	3rd Eye Single Camera with LCD Color Monitor		$2,445
☐	3rd Eye Double Camera with LCD Color Monitor		$3,767
☐	3rd Eye Triple Camera with LCD Color Monitor		$5,030
	Camera 1 Location - Mounted on Tailgate Facing Rear		
	Camera 2 Location - ☐ Left Hand Side Cab - ☐ Right Hand Side Cab - ☐ Hopper - ☐ Grabber		
	Camera 3 Location - ☐ Left Hand Side Cab - ☐ Right Hand Side Cab - ☐ Hopper - ☐ Grabber		
Extended Warranty			
☐	Five Year (Maximum 10,000 Hrs. of Operation) Cylinder Warranty for STARR Lift Only		$11,050
☐	Five Year (Maximum 10,000 Hrs. of Operation) Cylinder Warranty for Single STARR Trailer Only		$9,000
☐	Five Year (Maximum 10,000 Hrs. of Operation) Cylinder Warranty for STARR Tandem Trailers		$15,710
Paint Options			
NOTE: LIST PAINT CODES ON PAINT DIAGRAM			
☐	Customized Paint Color - Paint Color Code NOT included in the Color Smart Brochure		$375
☐	Customized Lift Paint - Any color other than Visibility Yellow (Standard)		$315
☐	Two Tone Paint		$1,430
☐	Paint Striping - first stripe		$1,200
☐	Paint Striping - each additional stripe		$670
☐	Metallic Paint		$1,200
☐	Clear coat Finish		$1,700
☐	Anti-Graffiti Clear coat Finish		$2,400
☐	Prime Paint Only - deduct		($1,220)
TOTALS			
	Total from Options Above (MSRP)		**$0**
	Additional Options (SOARs, Chassis Mods, Etc.) Total		
	Subtotal		**$0**
	Dealer Discount (%)	**0%**	**$0**
	Dealer Net Price		**$0**
	Additional Discount (SPR)		
	Freight		
	Total Price per Unit		**$0**

STARR® SYSTEM

Paint Stripe & Accessories Requirements

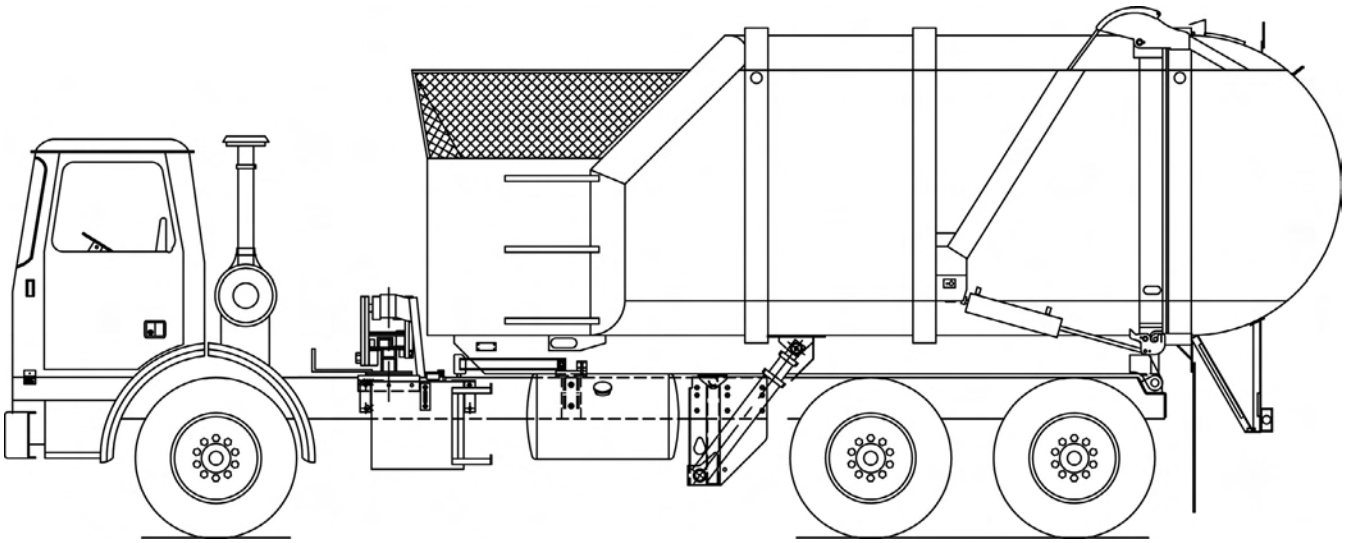

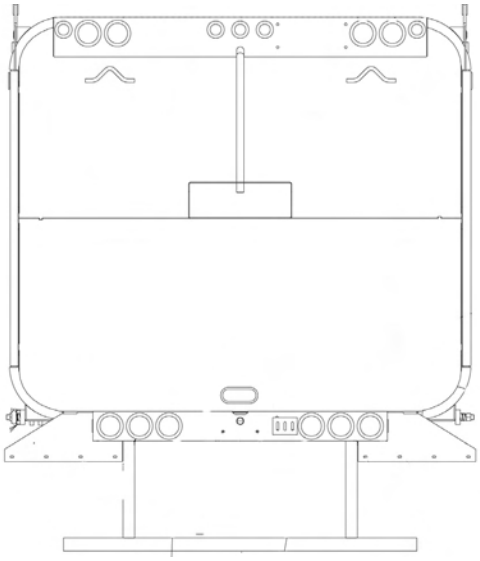

PAINT AND OPTIONS LAYOUT DETAIL
USE THIS FORM TO DESCRIBE PAINT SCHEMES
BE SPECIFIC ABOUT DIMENSIONS AND DETAILS

Sales Order #		Submitted by	
Customer			
Paint Color 1			
Paint Color 2			
Paint Color 3			
Chassis Make			
Chassis Model			
Wheelbase			
Body Size		Approved by	

DuraPack® 4060

Split-Body Rear Loader

Standard Equipment Features included in Base Price

- Bolt-on ANSI rear riding steps
- Street and curb side access doors w ith step and grab
- Tailgate service props
- Automatic tailgate latches
- Front mount tandem vane pump system
- Chrome plated telescopic sleeves
- Underbody oil tank w ith level / temperature gauge and oil suction shut-off valve
- Dual 3-micron return line filter w ith magnetic trap and in-cab filter bypass monitor
- 100-micron suction line strainer
- Fabric guard hose protection for all high pressure hoses
- Regenerative valve for fast packer cycle and reload times
- Dual side tailgate guzzer
- Neutral safety sw itch on automatic transmissions only
- Fully sealed, electric left and right side tailgate mounted packer controls
- 1/4" hopper floor liner
- 3/16"hopper side lienr
- Backup alarm
- Backup and license plate lights
- LED Center-mounted brake light
- LED Duplicate high and low mount stop, turn, and tail lights
- LED Mid-body turn signals
- LED FMVSS #108 clearance lights and reflectors
- ICC reflective tape
- Rear camera bracket and flood lights - reverse activated
- Dual emergency stop buttons - one on each side of the tailgate
- Cavity coat and joint sealer
- Body undercoating
- Customer's choice of one color finish paint from ColorSmart brochure
- Standard 1-year (2,000 hours of operation)
- ANSI Z 245.1-2012 Compliant
- Safety Triangle
- 5 lb. In-Cab Fire Extinguisher

Environmental Solutions Group
A DOVER COMPANY

Effective January,1,2016 DuraPack 4060 Sales Order Form

Base Units DuraPack 4060			
☐	25 cubic yard		$171,146
	EJECT		
Hopper Size		Street	1.1 yd³
		Curb	1.5 yd³
CHASSIS MUST COMFORM WITH HEIL'S MOST CURRENT CHASSIS SPECIFICATIONS AT WWW.HEIL.COM			
* NOTE: Red numbers reference Option Photo Index			
Mounting Options			
☐	Full Factory Mount		$4,315
☐	Mount at Dealer Destination		$705
Power Take Off / Pump Options			
☐	Front Mount Tandem Vane Pump		STD
☐	Remote Mount Tandem Vane Pump with Transmission Driven, Constant Duty PTO		$2,835
☐	890 Hot Shift PTO with Tandem Vane Pump		$4,615
Lighting and Electrical Accessories			
☐	Hopper Work Lights Kit - two lights (1 per hopper) - switch on tailgate	L9	$450
☐	Peterson Multi-Function (SMART) LED Strobe / Turn Lamps - includes LED light package for entire unit	L10	$585
☐	LED Body Side Backing Assist Lights - reverse activated	L3	$740
☐	Strobe Light, Amber - in-cab switch - mounted front of body	L4	$645
☐	Strobe Light, Amber - in-cab switch - mounted upper tailgate	L4	$645
☐	Municipal Lights with Dual 7" Amber incand. & Overhead Flood Light	L2	$1,385
Container Handling / Cart Tipper Options			
☐	Left hand Tailgate Single Cart Tipper Control Valve, Handle, Plumbing and Hose Kit	MG2	$1,940
☐	Right hand Tailgate Single Cart Tipper Control Valve, Handle, Plumbing and Hose Kit	MG2	$1,940
☐	Bayne Cart Tipper - Specify Model - Includes Controls, Valves, Plumbing, and Installation		See Bayne
☐	Customer Installed Left hand Tailgate Single Cart Tipper Kit - Bayne Bracket, Control Valve, Handle, Plumbing and Hose Kit	MG1	$2,235
☐	Customer Installed Right hand Tailgate Single Cart Tipper Kit - Bayne Bracket, Control Valve, Handle, Plumbing and Hose Kit	MG1	$2,235
	Specify Brand and Model		
CUSTOMER SUPPLIED CART TIPPERS ARE NOT ADMISSIBLE			
Body Options and Accessories			
☐	Mud Flaps - anti-sail / anti-splash - ahead of rear tires	B7	$215
☐	Hydraulic Oil Tank Heater - 500 watts		$1,140
☐	Hydraulic Pressure Gauge Kit (shipped loose in cab)	B2	$295
☐	Dual High Pressure Filter Kit	B3	$1,725
☐	20 lb. Fire Extinguisher with Bracket	B4	$477
☐	Tool Box (18" x 18" x 24") - frame mounted	B5	$735
☐	5 Gallon Cooler and Bracket - frame mounted	B12	$335
☐	Broom and Shovel Rack - mounted on tailgate		$205
☐	Manual Tailgate Controls on Street side and Curbside Tailgates		$1,365
☐	Oil Tank - Mounted on Front Head		$1,100
☐	Spill Kit		$325
☐	Hydraulic Oil Tank Quick Disconnect Kit - For use with filter buggy		$785
Camera Systems			
All camera systems are mounted with protective camera brackets and twin tailgate flood lights			
CAMERA MONITOR LOCATION WILL BE CAB ROOF MOUNTED			
Swivel monitor bracket will be provided for dual drive chassis			
360 ˚ Camera Systems and Options			
☐	360 Degree Camera Package - Includes 360 degree camera system (4 camera), DVR capability, Dash Camera, Operator Facing Camera, Hopper Camera, and WIFI Capability		$8,979
☐	360 Base Camera System - Includes 360 (4 Camera System) for Monitoring Only		$8,113
☐	Add DVR for Recording Function - Includes Dash Camera for Road Facing View		$1,613
☐	Add Operator Facing Camera for Operator Monitoring		$369
☐	Add Hopper Camera		$994
3rd Eye Camera Systems			
☐	3rd Eye Single Camera with LCD Color Monitor		$2,440
☐	3rd Eye Double Camera with LCD Color Monitor		$3,767
☐	3rd Eye Triple Camera with LCD Color Monitor		$5,030
	Camera 1 Location - Mounted on Tailgate Facing Rear		
	Camera 2 Location - Choose: ☐ Left Hand Side Cab - ☐ Right Hand Side Cab		
	Camera 3 Location - Choose: ☐ Left Hand Side Cab - ☐ Right Hand Side Cab		

Effective January,1,2016 DuraPack 4060 Sales Order Form

Load Cell Scale Systems			
☐	Heil Optimum Payload System (HOPS) using Air-Weigh Axle Scales	CE20	$8,400
☐	Air-Weigh Axle Scale System without Interlock	CE20	$7,836
CNG Installation			
☐	CNG Installation Charge - Includes brackets, hardware, and mounting of CNG system		$5,405
Extended Warranty			
☐	Five (5) Year (Maximum 10,000 hrs. of Operation) Cylinder Warranty		$6,645
Paint Options			
NOTE: LIST PAINT CODES ON PAINT DIAGRAM			
☐	Customized Paint Color - Paint Color Code NOT included in the Color Smart Brochure		$375
☐	Two Tone Paint		$1,430
☐	Paint Striping - first stripe		$1,200
☐	Paint Striping - each additional stripe		$670
☐	Metallic Paint		$1,200
☐	Clear coat Finish		$1,670
☐	Anti-Graffiti Clear coat Finish		$2,400
☐	Prime Paint Only - deduct		($969)
TOTALS			
	Total from Options Above (MSRP)		**$0**
	Additional Options (SOARs, Chassis Mods, Etc.) Total		
	Subtotal		**$0**
	Dealer Discount (%)	**0%**	**$0**
	Dealer Net Price		**$0**
	Additional Discount (SPR)		**$0**
	Freight		
	Total Price per Unit		**$0**

DURAPACK® 4060

Paint Stripe & Accessories Requirements

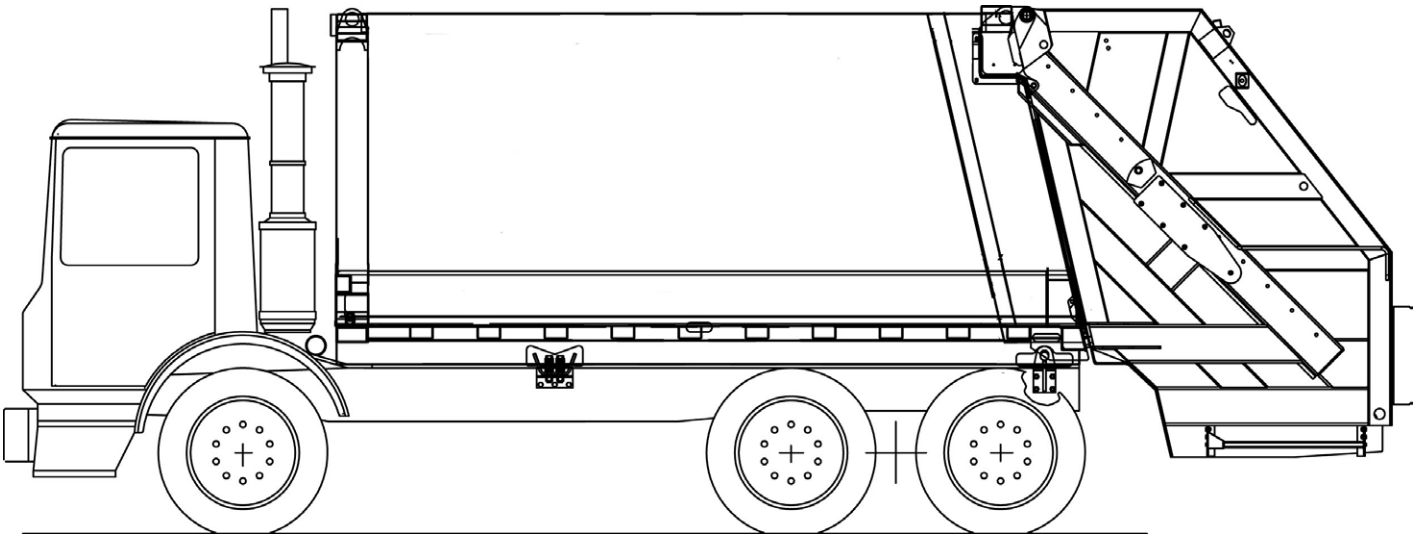

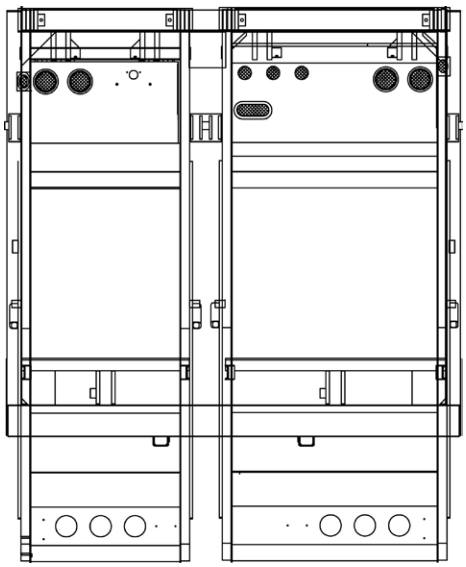

Paint and options layout detail
Use this form to describe paint schemes
Be specific about dimensions and details

Sales Order #		Submitted by	
Customer			
Paint Color 1			
Paint Color 2			
Paint Color 3			
Chassis Make			
Chassis Model			
Wheelbase			
Body Size		Approved by	

Retriever Satellite™

Compact Manual Side Loader

Standard Equipment Features included in Base Price

- Upper and low er hopper side doors
- Tw o-piece hinged tailgate
- Full w heel w ide fenders
- "Load any time" compactor and follow er shield design
- Remote-mount cast iron roller bearing gear pump (less PTO)
- Transfer package
- Auto cycle
- Heavy-duty electric Husco control valve
- Underbody oil tank w ith level/temperature gauge and oil suction shut-off valve
- 10-micron return line filter w ith 25 psi bypass valve
- 100-micron suction line strainer
- 4:1 burst ratedpressure hoses
- Backup alarm
- Backup and license plate lights
- LED Duplicate high and low mount stop, turn, and tail lights
- Rear mud flaps - anti-sail/anti-splash
- LED FMVSS#108 clearance lights and reflectors
- ICC reflective tape
- Remote lube for packer cylinder pins
- Dual electric auto packer push button controls
- Ejection, tailgate and secondary pack controls located at rear of body on street side
- Three emergency shut-off control buttons
- Tw o front body removable access panels
- Bolt-on access covers for packer cylinder pins
- Body undercoating
- Customer's choice of one color finish paint from ColorSmart brochure
- Standard 1-year (2,000 hours of operation) w arranty
- ANSI Z 245.1-2012 Compliant
- Cavity coat and joint sealer
- Tailgate service props
- Safety Triangle
- 5 lb. In-Cab Fire Extinguisher

Environmental Solutions Group
A DOVER COMPANY

Effective January,1,2016 Retriever Satellite Sales Order Form

Base Units Retriever Satellite - EJECT ONLY			
☐	6 cubic yard		$45,635
☐	10 cubic yard		$50,918
Hopper Size			0.75 yd³
CHASSIS MUST COMFORM WITH HEIL'S MOST CURRENT CHASSIS SPECIFICATIONS AT WWW.HEIL.COM			
* NOTE: Red numbers reference Option Photo Index			
Mounting Options			
☐	Full Factory Mount		$4,315
☐	Mount at Dealer Destination		$705
Power Take Off / Pump Options			
☐	Direct Mount Gear Pump		STD
☐	Ford F550 Gear Pump/PTO Combination		$3,100
☐	Hot shift PTO with Over speed protection		$2,835
☐	Cable shift PTO - manual shift transmission only		$1,015
☐	Air shift PTO*		$1,225
*Chassis must be equipped with air brakes			
**This is the only pump option available for Ford transmissions. PTO is included.			
Lighting and Electrical Accessories			
☐	Hopper work light	L13	$335
☐	Dual Hopper work lights	L13	$450
☐	Peterson Multi-Function (SMART) LED Strobe / Turn Lamps - includes LED light package for entire unit	L10	$585
☐	Strobe Light, Amber - in-cab switch - mounted rear body roof	L4	$645
Cart Tipper Options			
☐	Single Cart Tipper Control Valve, Handle, Plumbing and Hose Kit - curb side		$1,895
☐	Single Cart Tipper Control Valve, Handle, Plumbing and Hose Kit - street side		$1,895
☐	Bayne Cart Tipper - Specify Model - Includes Controls, Valves, Plumbing, and Installation		See Bayne
CUSTOMER SUPPLIED CART TIPPERS ARE NOT ADMISSIBLE			
Body Options and Accessories			
☐	Eliminate Transfer System - deduct		($522)
☐	Top Cover - expanded metal	B42	$675
☐	20 pound Fire Extinguisher with bracket	B4	$477
☐	Hydraulic Pressure Gauge Kit (shipped loose in cab)	B2	$290
☐	15" Wide fender - for tire to tire width less than 76"		Incl.
☐	18" Wide fender - for tire to tire width between 76" - 88"		Incl.
☐	24" Wide fender (dual wheels) - for tire to tire width greater than 88"		Incl.
Rear Vision Camera Systems			
All camera systems are mounted with protective camera brackets and twin tailgate flood lights			
CAMERA MONITOR LOCATION WILL BE CAB ROOF MOUNTED			
☐	3rd Eye Single Camera with LCD Color Monitor		$2,445
Extended Warranty			
☐	Five (5) Year (Maximum 10,000 hrs. of Operation) Cylinder Warranty		$4,125
Paint Options			
NOTE: LIST PAINT CODES ON PAINT DIAGRAM			
☐	Customized Paint Color - Paint Color Code NOT included in the Color Smart Brochure		$375
☐	Two Tone Paint		$1,430
☐	Paint Striping - first stripe		$1,200
☐	Paint Striping - each additional stripe		$670
☐	Metallic Paint		$1,200
☐	Clear coat Finish		$1,700
☐	Anti-Graffiti Clear coat Finish		$2,340
☐	Prime Paint Only - deduct		($507)
TOTALS			
	Total from Options Above (MSRP)		**$0**
	Additional Options (SOARs, Chassis Mods, Etc.) Total		
	Subtotal		**$0**
	Dealer Discount (%)	**0%**	**$0**
	Dealer Net Price		**$0**
	Additional Discount (SPR)		
	Freight		
	Total Price per Unit		**$0**

RETRIEVER SATELLITE™

Paint Stripe & Accessories Requirements

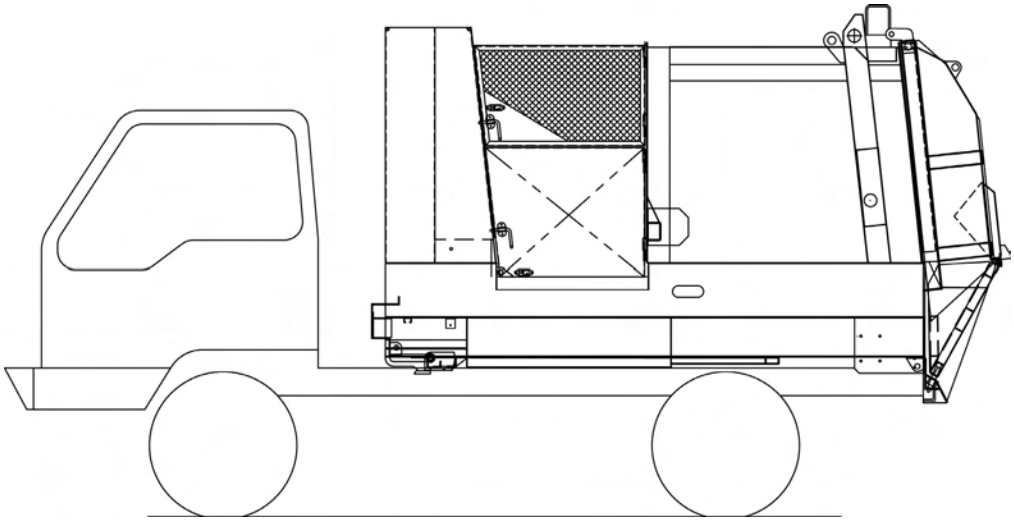

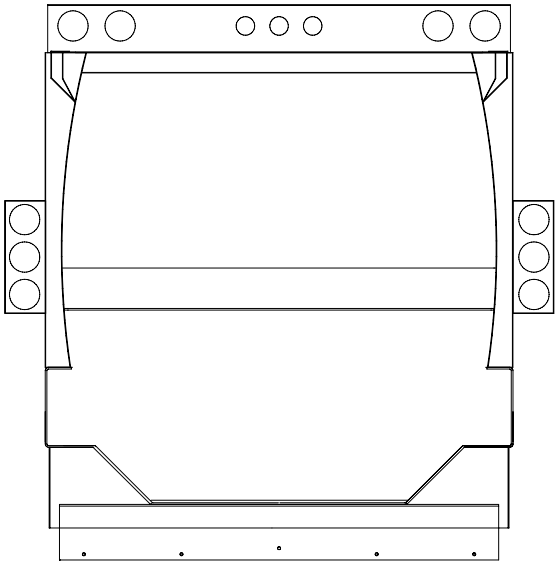

PAINT AND OPTIONS LAYOUT DETAIL
USE THIS FORM TO DESCRIBE PAINT SCHEMES
BE SPECIFIC ABOUT DIMENSIONS AND DETAILS

Sales Order #		Submitted by	
Customer			
Paint Color 1			
Paint Color 2			
Paint Color 3			
Chassis Make			
Chassis Model			
Wheelbase			
Body Size		Approved by	

KwikLift™

Cable Hoist for Roll-Off Containers

Standard Equipment Features included in Base Price

- 60,000 lbs. capacity
- 7/8" cable - 28' long traveling over one powered 14" sheave utilizing one telescopic cylinder 7"/6"/5"/4" with mid-support
- Five container rollers per side - 4" OD x 3.5" L greasable bronze bushing rollers with outboard and inboard supports: rollers are protected by container guide rails
- Outside main control valve - three section with manual levers and integrated adjustable flow control for tarper
- In-cab two-lever air hoist controls
- Rear-wing skid plate
- 2 1/2" heavy-duty hinge pin
- 3/8" steel mounting plates
- LED light package
- DOT compliant collapsible rear under-ride
- Heavy-duty frame design eliminates need for auxiliary stops
- Premium hoist frame bolted to the chassis frame - not welded
- Loads 12 tons at idle - 2,750 psi main relief pressure
- 10' of cable beyond the rear hoist
- Rear container hold down - ratchet strap type
- Backup alarm - auto adjusting
- Cable holder
- High-volume gear pump
- 5-micron full-flow hydraulic filter
- Hoist safety props
- Mid-body turn/clearance lights
- 75 gallon side-mount hydraulic tank
- 2" shut-off valve and 1/4 turn full-flow valve
- Enclosed rear ground roller - 6 3/8" OD
- 1-year frame warranty
- Hoist up alarm with proximity switch
- Frame painted black

Effective January,1,2016 KwikLift Sales Order Form

Base Units KwikLift			
☐	C6022 KwikLift Cable Hoist - 22'		$31,658
☐	C6024 KwikLift Cable Hoist - 24'		$32,315
☐	Dead Lift Compatible		$3,220
☐	Inside/Outside Rail		$2,550
☐	75,000lbs Rated Hoist		$2,195
CHASSIS MUST COMFORM WITH HEIL'S MOST CURRENT CHASSIS SPECIFICATIONS AT WWW.HEIL.COM			
Mounting Options			
☐	Forward Mount Hoist Cylinders		$0
Hoist Options and Accessories			
☐	Pintle Hitch - Frame Only - allows for customer installed pintle		$970
☐	Rear Wet Kit - Double Acting - Both lines powered		$2,175
☐	Hydraulic Oil Tank Quick Disconnect Kit - For use with filter buggy		$765
Paint Options - Factory Only			
☐	Paint Tail Yellow		$1,150
TOTALS			
	Total from Options Above (MSRP)		**$0**
	Additional Options (Customs, Chassis Mods, Etc.) Total		
	Subtotal		**$0**
	Dealer Discount (%)	**0%**	**$0**
	Dealer Net Price		**$0**
	Additional Discount (SPR)		
	Freight		
	Total Price per Unit		**$0**

LowLift™

Cable Hoist with Hinged Tail for Roll-Off Containers

Standard Equipment Features included in Base Price

- Capacity - 60,000 lbs reeving and tail 25,000 lbs.
- 7/8" cable - 28' long traveling over one pow ered 14" sheave utilizing one telescopic cylinder 7"/6"/5"/4" w ith mid-support
- Five container rollers per side - 4" OD x 3.5" L greasable bronze bushing rollers w ith outboard and inboard supports: rollers are protected by container guide rails
- Tail angle 70º w ith the hoist frame horizontal
- Outside main control valve - three section w ith manual levers and integrated adjustable flow control for tarper
- In-cab three-lever air hoist controls
- Rear-w ing skid plate
- 2 1/2" heavy-duty hinge pin
- 3/8" steel mounting plates
- LED light package
- DOT compliant collapsible rear under-ride
- Heavy-duty frame design eliminates need for auxiliary stops
- Premium hoist frame bolted to the chassis frame - not w elded
- Frame painted black
- Loads 12 tons at idle - 2,750 psi main relief pressure
- 5' of cable beyond the rear hoist
- Rear container hold dow n - ratchet strap type
- Backup alarm - auto adjusting
- Cable holder
- High-volume gear pump
- 5-micron full-flow hydraulic filter
- Hoist safety props
- Mid-body turn/clearance lights
- 75 gallon side-mount hydraulic tank
- 2" shut-off valve and 1/4 turn full-flow valve
- Enclosed rear ground roller - 6 3/8" OD
- Hoist up alarm w ith proximity sw itch
- 1-year frame w arranty

Environmental Solutions Group
A DOVER COMPANY

Effective January,1,2016 LowLift Sales Order Form

Base Units LowLift			
☐	CL6022 LowLift Cable Hoist - 22'		$34,507
☐	CL6024 LowLift Cable Hoist - 24'		$35,163
☐	Dead Lift Compatible		$3,220
☐	75,000lbs Rated Hoist		$2,195
CHASSIS MUST COMFORM WITH HEIL'S MOST CURRENT CHASSIS SPECIFICATIONS AT WWW.HEIL.COM			
Mounting Options			
☐	Forward Mount Hoist Cylinders		$0
Hoist Options and Accessories			
☐	Pintle Hitch - Frame Only - allows for customer installed pintle		$970
☐	Rear Wet Kit - Double Acting - Both lines powered		$2,175
☐	Hydraulic Oil Tank Quick Disconnect Kit - For use with filter buggy		$765
Paint Options - Factory Only			
☐	Paint Tail Yellow		$1,150
TOTALS			
	Total from Options Above (MSRP)		**$0**
	Additional Options (Customs, Chassis Mods, Etc) Total		
	Subtotal		**$0**
	Dealer Discount (%)	**0%**	**$0**
	Dealer Net Price		**$0**
	Additional Discount (SPR)		
	Freight		
	Total Price per Unit		**$0**

Effective January,1,2016 Bayne Sales Order Form

BAYNE CART TIPPERS AND CARRY CANS

Bayne Cart Tippers

MODEL	DESCRIPTION	NOTES	ONE PER TRUCK		TWO PER TRUCK	
BTL1110 *	Rotary Actuated	Use for rear loading	☐	$6,135	☐	$12,270
BTL208-12	Rotary Actuated	Use for rear loading	☐	$6,250	☐	$12,495
MBTL180	Rotary Actuated	Use for rear loading - no packer blade interference with proper installation	☐	$5,545	☐	$11,085
TL1116	Rotary Actuated	Use for rear loading	☐	$6,210	☐	$12,420
Revolution	Rotary Actuated	Use for rear loading	☐	$5,960	☐	$11,925
TL1120	Rotary Actuated	Use for side or rear loading	☐	$6,210	☐	$12,415
TL1124	Rotary Actuated	Use for side loading	☐	$6,210	☐	$12,415
TL2228	Rotary Actuated	Use for side loading	☐	$7,826	☐	$15,655
Taskmaster	Direct Cylinder Actuated	Use for rear loading - modifications may be required for operation with commercial container mechanisms	☐	$4,080	☐	$8,160
GRL1110	Rotary Actuated	Grabber model for rear loading - can be used with roll bar	☐	$7,735	☐	N/A
GTL1110 **	Rotary Actuated	Grabber model for side or rear loading	☐	$10,585	☐	N/A

All Tippers above include Bayne Bracket, Control Valve, Handle, Plumbing and Hose Kit - Retriever model excluded

** The Taskmaster Hi-Lift and GTL series may not be used with commercial container mechanisms

Note: For non-traditional dumping heights, vertical lifts are available on most models

Bayne Cart Tippers

MODEL	DESCRIPTION	NOTES		Price
1910-0001	3 yard Carry Can with right side mounted cart tipper (single pin)	Includes single BTL1114 (Bayne Can Only) Does not include body hydraulics and must be selected from the price guide	☐	$8,560
1910-0009	3 yard Carry Can with right side mounted cart tipper (single pin)	Includes single BTL208-12 on side (Bayne Can Only) Does not include body hydraulics and must be selected from the price guide	☐	$8,045
Safety Yellow Paint				STD
Special Color Paint			☐	$350

TOTALS

Total from Options Above (MSRP)		**$0**
Additional Options (SOARs, Chassis Mods, Etc.) Total		
Subtotal		**$0**
Dealer Discount (%)	**0%**	**$0**
Dealer Net Price		**$0**
Additional Discount (SPR)		
Freight		
Total Price per Unit		**$0**

Effective January,1,2016 Ready Truck and Chassis Mods Sales Order Form

READY TRUCK AND CHASSIS MODIFICATIONS

Chassis Modification Options - All Makes		
☐	Wheelbase Shortening	$2,040
☐	Wheelbase Lengthening	$3,570
☐	Customer's Choice of One Color Finish Paint for Cab	$3,570
☐	Heated Mirrors - installed	$960
☐	Telma Frictionless Braking System - installed	$17,015
☐	Roof Mounted Air Conditioning System - Red Dot Model 6100 - installed	$6,640
☐	Bumper Extension Modification	$2,785
Chassis Component Relocation Charges		
☐	Relocation of Air Dryer to Heil Specifications	$450
☐	Relocation of Air Tanks to Heil Specifications	$620
☐	Relocation of Battery Box to Heil Specifications	$410
☐	Two Battery Box Replacement	$845
☐	Three Battery Box Replacement	$900
☐	Relocation of Fuel Tank to Heil Specifications	$565
☐	Relocation of Oil Cooler to Heil Specifications	$350
☐	Relocation of Muffler to Heil Specifications - muffler will only be moved under the guidelines obtained from the chassis vendor by	$855
Chassis Re-Programming Charge		
☐	Re-Programming of Transmission - as necessary to adhere to program guidelines as presented in Product Bulletin 313	$320
Chassis Handling Charges		
☐	Chassis Tow Away Prep - condition whereby a chassis is checked in, fueled, stored, and then towed from the premises for any reason. Towing charge is not included	$270
☐	Chassis Drive Away Prep - condition whereby a chassis is checked in, fueled, stored, installed with drive away lights and mud flaps, and then driven away from the premises for any reason. Drive away charge is not included	$450
☐	Alternative Fuel (CNG/LNG) Handling Fee - Tank and Gas for internal transport	$775

TOTALS			
	Total from Options Above (MSRP)		**$0**
	Additional Options (SOARs, Chassis Mods, Etc.) Total		
	Subtotal		**$0**
	Dealer Discount (%)	**0%**	**$0**
	Dealer Net Price		**$0**
	Additional Discount (SPR)		
	Freight		
	Total Price per Unit		**$0**

Effective January,1,2016 Heil Training Sales Order Form

Heil Factory and On-Site Training

☐	**Three day factory training at Heil (Includes)**		**$1,280**
	Day 1 - Basic hydraulics with plant tour		
	Day 2 - Basic electronics with PLC and Cortex training		
	Day 3 - Product specific service school		
☐	**On-Site Training (Includes)** **Maximum 8 Students**		**$3,900**
	Maintenance/Service Training - Safety, Preventative Maintenance, Unit Hydraulics, Unit Electronics, Troubleshooting		
	Operator Training - Safety, Unit Operation, Operator Checks, Unit Demo		
	$100 for each additional student		
	The customer will be responsible for supplying an adequate classroom		
☐	**Start-Up Support (Includes)**		**$6,405**
	Maintenance Training, Operating Training, Start-up Service Support		
☐	**Heil Training Trailer (Includes)**		**$7,175**
	All factory training offerings except for the plant tour		
	All On-Site training offerings		
	Start-up support		
	Fee does not include transport cost of the training trailer. Contact Heil Training Manager for cost breakdown.		
	Capability of 12 student per session		
	Customer must provide parking area for the training trailer		
TOTALS			
	Total Price		**$0**

Options Photo Index

Body Options

Regenerative Valve B1

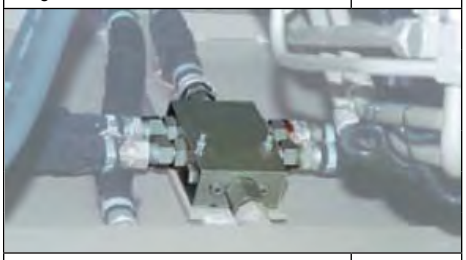

Hydraulic Pressure Gauge Kit B2

High-Pressure Filter Kit B3

20 lb. Fire Extinguisher with Bracket B4

Tool Box - Frame Mounted B5

Tool Box - Bumper Mounted B6

Mud Flaps B7

Mud Guards B8

Service Hoist Kit B9

Washout Tank B10

Return Line Check Valve B11

5-Gallon Igloo Cooler Bracket (Cooler not Shown) B12

Tailgate Side Spill Trough B13

In-Body Oil Tank B14

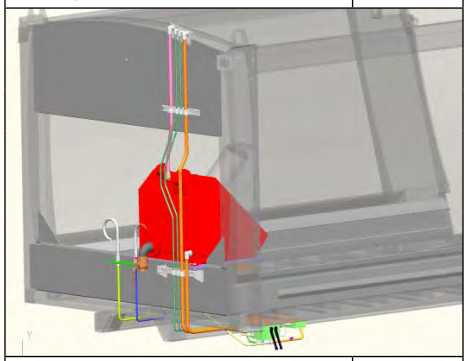

Broom and Shovel Rack (DuraPack® 5000) B15

Broom and Shovel Rack (PowerTrak® Commercial) B16

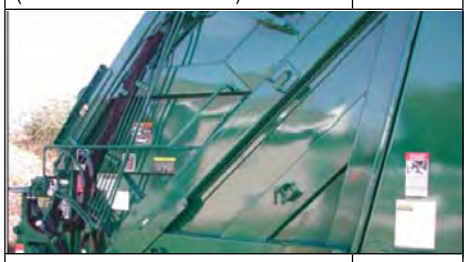

Slide Bearings - Bronze and Delrin B18

Chassis Rail Closure Kit B19

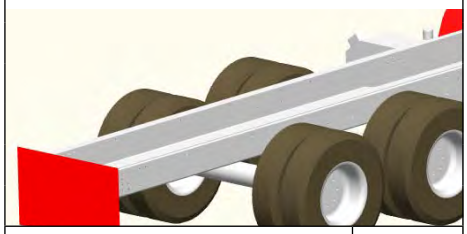

Body Drain Valve B20

Body Side Access Door with Step and Grab B21

Body Front Head Screen with Step and Grab B22

4" Hopper Lip Extension (Shown with Optional Roll Bar and Latch Kit) B23

Rear Caution Decal B24

Hopper Wind Screens B25

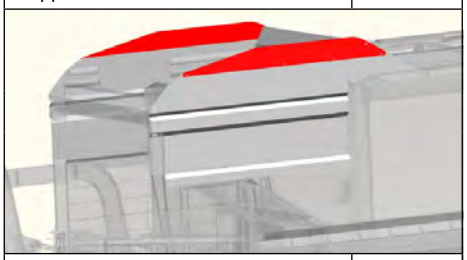

Body Roof Retainer Teeth B26

Hydraulic Sliding Top Door B28

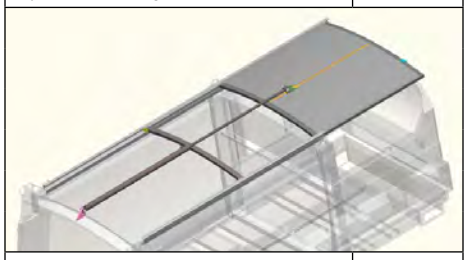

4 Bearing Blocks (Half/Pack®) B32

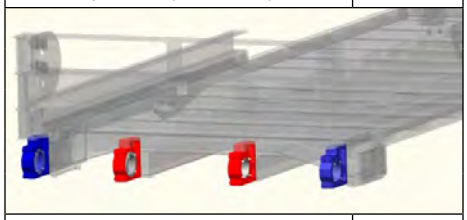

Hopper Cover (DuraPack® Body) B33

Manual Hopper Cover (Rapid Rail® Body) B34

Hopper Hood B35

Autolube System for Packer B36

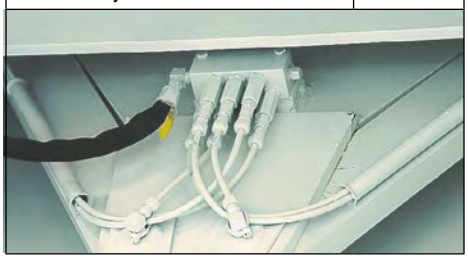

Solid Hopper Upper Extension (Rapid Rail®/STARR® System) B37

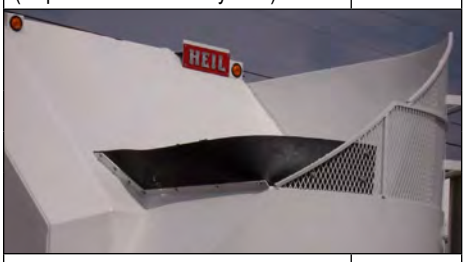

Rear Fender (Rapid Rail Body) B38

Two-Bar Trough Cart Dumper B39

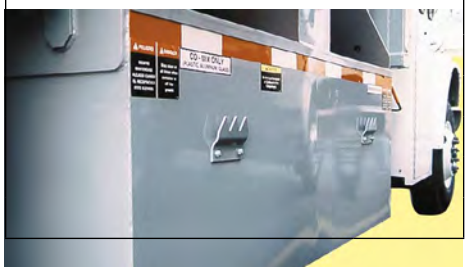

Narrow Fuel Tank (R2000) B41

Top Cover (Retriever Satellite™) B42

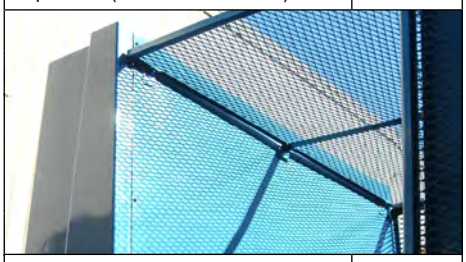

Sign Frame - J-Channel B43

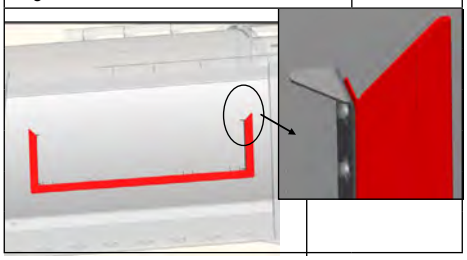

Sign Frame - Roadway B44

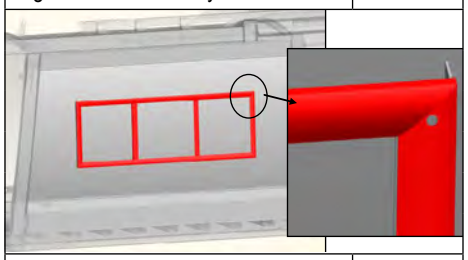

Sign Frame - Structural Channel B45

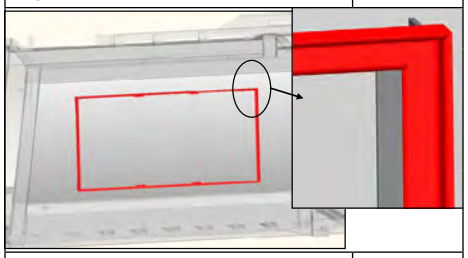

Hydraulic Tailgate Locks B46

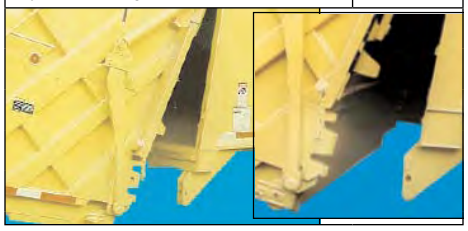

Controls & Electrical

Left-Hand (and RH) Buzzer Kit CE1

Residential Front Loader Kit Includes: Carry Can Dumper Hydraulics with Controls on Arm AutoLift™ Feature, Overheight Warning Kit, and Throttle Advance and Limit Kit CE2

Right-Hand Air Joystick CE3

Outside Joystick Control with Throttle Advance — CE4

Latest Photo Not Available

Outside Air Lever Control Kit — CE5

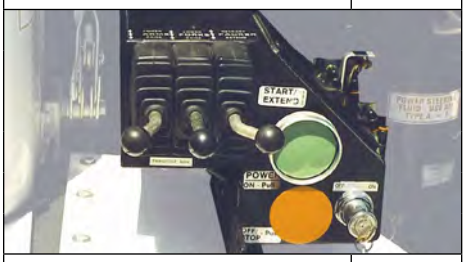

Dual Lever In-Cab Air Controls — CE6

Select-O-Pack — CE7

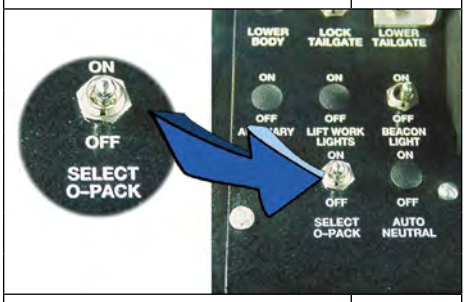

Lift Cycle Counter — CE8

Remote Lift Controls - Air Toggles (Mounted Under Seat) — CE9

Additional Joystick Control — CE10

Outside Lift Levers with Cover — CE11

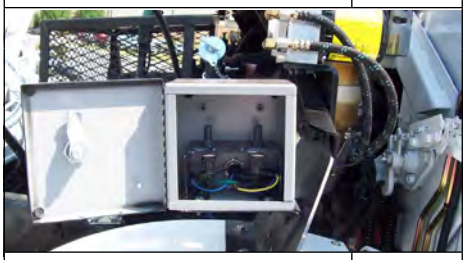

Packer and Crusher Controls (MultiTask®) — CE12

Joystick Control With Rocker Switch (Retriever Satellite™) — CE13

Remote Lift Controls (7000) Fender Mounted — CE14

Remote Rocker Switch Controls — CE15

California Back-up Alarm — CE19

Heil Optimum Payload System™ (HOPS™) — CE20

Container Lifting Mechanisms and Grabbers

Customer-Installed Cart Tipper Kit (Double) with Control Handle (Highlighted) — MG1

Additional Control Handles for Container Handling (Valve Section Not Shown) — MG2

Reeving Cylinder with Control Kit — MG3

Roll Bar with Control Kit — MG4

Arm Mechanism with Control Kit — MG5

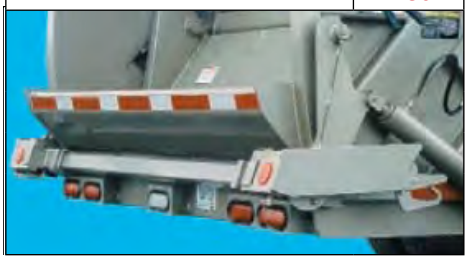

Lip and Latch Kit - Short Sill — MG6.1

Lip and Latch Kit - Long Sill — MG6.1

Lip and Latch Kit - With Cutouts — MG6.3

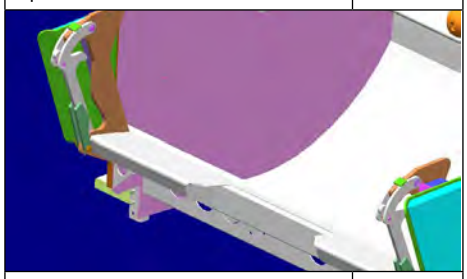

Standard Roll Bar (PowerTrak® Commercial) Latch Pivot — MG7

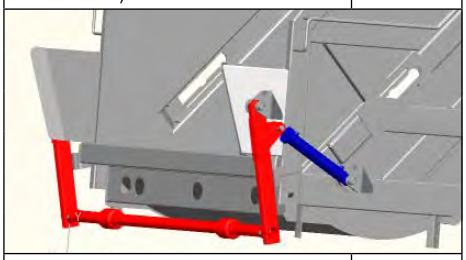

Roll Bar (PowerTrak® Commercial) - Bolster Pivot — MG8

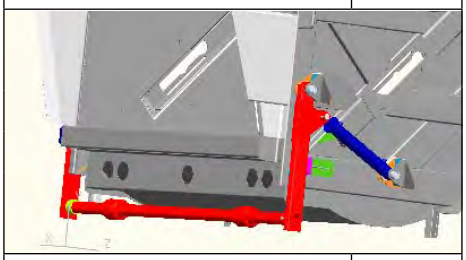

Drum Winch with Control Kit (Shown on DuraPack® 5000) — MG9

Reeving Cylinder Bracket — MG10

Forklift Style Adjustable Forks — MG11

60/90 Belt Grabber — MG15

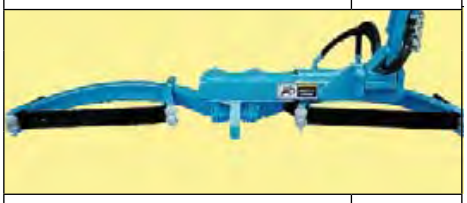

TriCuff Grabber — MG16

Changeable Spring Steel Grabber — MG17

Universal Belt Grabber — MG18

Lights

Hopper Work Light (FELs) L1

Municipal Light Kit with Dual 7" Strobes (1) and Overhead Flood Light (2) L2

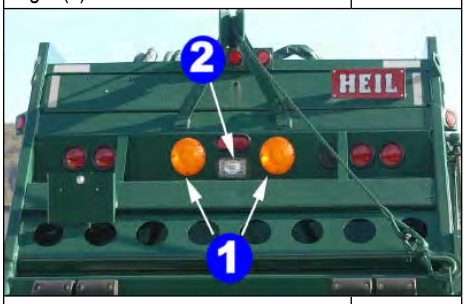

Body Side Backing Assist Light L3

Strobe Light, Amber L4

Hopper Work Light (FELs) L5

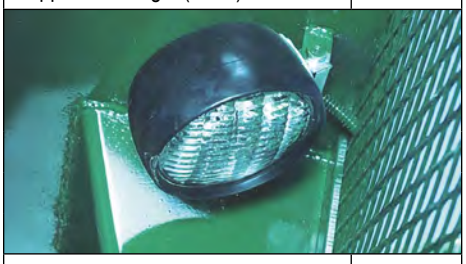

Backing Assist Lights (R2000) L6

1) Dual 7" Amber Lights on T/G
2) Strobe Light, Amber (Mounted Lower T/G) L7

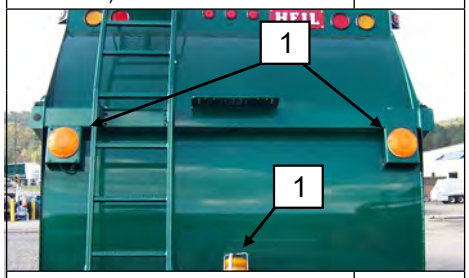

California Back-up Alarm L8

Dual Hopper Work Light (RELs) L9

Peterson Multi-Function Lights LED Strobes & Turn Light Combination L10

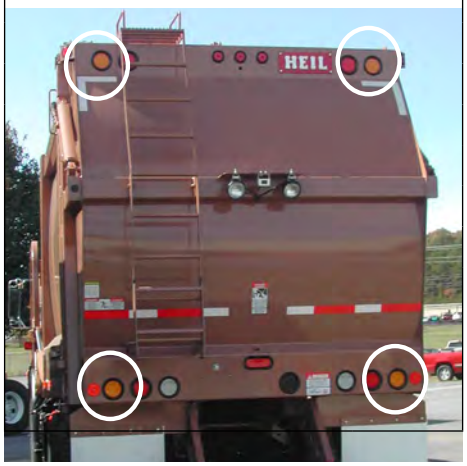

Lift and Hopper Work Light Kit L11

Dual Flood Lights on Cab L12

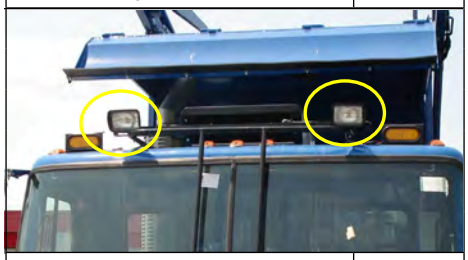

Dual Hopper Work Lights (Retriever Satellite™) L13

Dual Strobe Lights (Shown on REL) L14

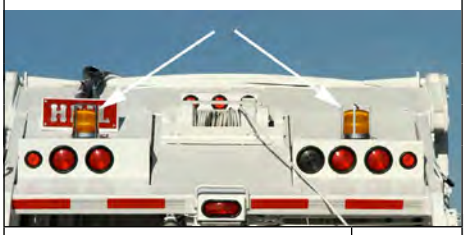

Dual Oval Amber Strobes Mounted Mid-tailgate L15

Bayne Lifters & Carry Cans

Taskmaster™

TL1124

Revolution

BTL208-12

BTL1110

MBTL180

Carry-Can with MBTL169

Terms & Conditions of Sale

1. **ORDERS.** All orders are subject to acceptance or rejection by Environmental Solutions Group, its subsidiaries, or affiliates including but not limited to: Heil Environmental, Marathon Equipment Company, The Curotto-Can, LLC, and Bayne Machine Works (collectively, "ESG"). NO ORDERS MAY BE CHANGED IN ANY MANNER WITHIN THIRTY DAYS OF THE SCHEDULED PRODUCTION DATE. ANY CHANGES REQUIRED BY THE CUSTOMER WITHIN THIS 30-DAY TIME FRAME MAY INCUR ADDITIONAL CHARGES AND WILL CAUSE THE ORDER TO BE REMOVED FROM THE PRODUCTION SCHEDULE AND RESCHEDULED AS DEEMED NECESSARY BY ESG IN ITS SOLE JUDGMENT.

2. **ORDER CANCELLATION.** After acceptance, orders for solid waste management and/or recycling Products ("Products") cannot be cancelled except upon terms that will compensate ESG fully for all inconvenience, cost, loss or damage sustained.

3. **ORDER ACKNOWLEDGEMENTS.** An Order Acknowledgment ("OA") must be reviewed, signed and returned to the applicable ESG subsidiary or affiliate to indicate Purchaser's verification the order is accurate. ESG reserves the right to hold an order from being slotted in the Production Schedule until a signed OA has been received. Regardless of whether an Order Acknowledgement has been executed, Purchaser expressly waives any claims of error or loss for orders that are produced in accordance with an OA transmitted to Purchaser that Purchaser does not correct and transmit in writing to ESG before production begins.

4. **CUSTOM ORDER REQUESTS.** Orders for Products with components not regularly carried in stock or requiring special engineering, special parts ordering or special manufacture are in every case subject to approval by the Product Management department of ESG and shall be subject to the procedures and qualifications set forth in ESG's *Custom Order Policy* as published by ESG and/or posted on the respective ESG website. Work performed at Purchaser's request such as sketches, drawings, design, testing, fabrication and materials shall be charged at then-current rates.

5. **PERFORMANCE.** ESG shall not be liable for damages of any kind whatsoever arising from failure to complete the contract in accordance with its items if such changes are due to Acts of God, wars, severe weather, strikes, fires, floods, accidents, material shortages, delays in transportation and other acts of force majeure or other causes beyond its reasonable control.

6. **INTELLECTUAL PROPERTY.** Sketches, engineering drawings, specifications, models, mock-ups, manuals, marketing materials, and all preparatory work submitted to, created or furnished by ESG shall remain its exclusive property. No other customer use of these materials is authorized, nor may derivations, alternatives or modifications created there from be used or disclosed to anyone except with the prior written consent of ESG.

7. **SHIPMENT AND F.O.B. POINT.** All shipments will be made after completion of manufacture unless otherwise agreed to in writing. In the event that agreement is reached for ESG to store completed items, the Purchaser will be invoiced immediately upon completion of manufacture, and such invoice shall be due and payable according to these terms. Storage shall be at the risk of the Purchaser and ESG shall be liable only for the ordinary care of the property. Unless otherwise stated in writing, all prices quoted or otherwise listed are F.O.B. point of manufacture. In all cases, in-transit liability and risk of loss transfers to the Purchaser at the time of delivery to the Purchaser, their employees, agents, or a delivery service or common carrier – whichever occurs first. Unless otherwise provided, with respect to the attachment or affixing of ESG Products to the Purchaser's property (e.g. truck chassis), title and risk of loss with respect to such Products are transferred to Purchaser upon initiation of such attachment.

8. **PURCHASER'S PROPERTY.** ESG may charge the Purchaser at current rates, for handling and storing Purchaser's property (e.g. truck chassis or Purchaser-supplied accessories) when held for more than thirty days. All Purchasers' property, or third parties' property, that is stored by ESG or its employees, agents or assigns (whether on or off ESG facilities) is at the Purchaser's or other party's risk. ESG shall only provide for ordinary care of the property and shall not be liable for any loss or damage thereto caused by fire, water, corrosion, vandalism, theft, negligence, or any cause whatsoever. It is the Purchaser's unconditional obligation to insure its property and/or accept the risk of loss.

9. **TRAINING.** It is the Purchaser's responsibility to provide these *Terms & Conditions of Sale* to the Product owner and to specifically notify the Product owner that it is the Product owner's responsibility to ensure that the *Operators Manual* remains with each unit and the *Parts & Service Manual* is available for use. Additionally, regardless of whether or not the manufacturer or its designee provides training at the time of Product delivery, the Product owner is responsible for training their operators and maintenance personnel and shall ensure that every person who operates or maintains the Product has been trained on the proper operation, service, storage, service hoist use, battery disconnect use, lock out/tag out procedures and the Product owner's company work rules for each Product.

10. **PRICES.** All orders are subject to current prices in effect at the time of shipment, including any applicable surcharges. Purchaser must exclusively assign the qualified alternative motor vehicle credit to ESG or its designee. Purchaser expressly understands and agrees that the pricing quoted for qualified alternative motor vehicles includes a discount predicated on ESG obtaining a stipulated tax credit and Purchaser agrees to fully compensate ESG for any reduction or recapture of said qualified alternative motor vehicle tax credit for any reason whatsoever. It is understood that recapture of the tax credit may be caused by converting a Compressed Natural Gas ("CNG") engine to a diesel engine.

11. **PAYMENT AND COLLECTION.** ESG's standard domestic payment terms are Net 30 days from the date of invoice unless modified by a separate written agreement with your company. For non-domestic shipments, a Letter of Credit or other ESG approved surety of payment may be required prior to shipment. Notwithstanding the foregoing, ESG reserves the right to administer credit in accordance with its Credit Department's sole judgment at any time to any order and its decision shall be final, non-appealable, and binding. If for any reason the Purchaser defaults on any monies owed to ESG, said Purchaser shall be responsible for all costs incurred by ESG in the collection of outstanding monies including but not limited to: collection agency fees, filing fees, judgment, interest expense, settlement, Court and/or administration costs, attorney's fees, etc. ESG reserves the right to charge and collect late fees for overdue payments.

12. **TAXES.** Unless specifically stated on your quotation and invoice, prices charged by ESG do not include Federal, State, City or other excise, occupation, sales, use, VAT or similar taxes which are extra and are the customers' obligation to pay to the applicable taxing authority at rates in effect at time of shipment. If Federal Excise Taxes are included and listed on the order acknowledgement or invoice, they are stated at the rates and regulations in effect at the time this order is written, and are subject to revision in accordance with rates and regulations in effect at time of shipment. If Federal Excise Taxes are not included on ESG's invoice, this shall not be construed as ESG offering an opinion on taxability of our product(s) or providing tax or legal advice. ESG does not provide tax advice. Customers are encouraged to consult with a tax professional to determine the potential for any tax liabilities beyond those reflected on the invoice from ESG.

13. **PRODUCT IMPROVEMENT.** ESG reserves the right to change its solid waste management & recycling Product offerings (collectively, "Products"), Product specifications, material or component suppliers, Product design, and/or Production procedures at any time in its sole judgment.

14. **MOUNTING PRICES.** For mobile equipment Products, it is the Purchaser's responsibility to provide or purchase from ESG a new chassis that meets the specifications published by ESG on the website of its applicable subsidiary or affiliate for the specific Product model & size ordered. Used chassis will not be factory mounted. Mounting prices assume normal factory installation on a fully functional truck chassis suitable for the unit purchased. Repair of chassis, relocation or installation of batteries, gas tanks, mufflers, air tanks etc. will be made at an additional charge, to be billed at the standard factory parts and labor rates. It is expressly understood that ESG is not authorized to modify exhaust systems on engines that comply with EPA emission standards which became effective in 2007. Chassis delivered to ESG requiring modification of such an exhaust system to enable body mounting will be returned to the Purchaser or a designated chassis dealer at the Purchaser's expense.

15. **WARRANTY.** ESG warrants its Products in accordance with the applicable ESG subsidiary or affiliate's *Warranty Statement* (the "Warranty Statement") provided with the Product or published on the respective website unless you have a contract with ESG providing specific terms and conditions of warranty. A copy of the *Warranty Statement* is available from your Dealer and is posted on ESG's applicable website for the Product. While the text in the *Warranty Statement* for each respective ESG entity is more specific and shall prevail, ESG's Product warranty is expressly limited to repair or replacement of any component or part thereof, for any such Product that is determined by ESG to be defective in materials or workmanship. The component or part shall be repaired or replaced without cost to the first purchaser for materials and labor provided such unit is returned for such repair or replacement to an authorized ESG Dealer within six months from the unit's in-service date to such first purchaser. Any Product warranty is not transferable, except for sales demonstration units. No warranty claims will be processed on any ESG Product unless the warranty registration was submitted timely to the ESG Customer Support Department applicable to the Product. Any service parts sold by ESG carry a six month warranty for part replacement only, due to a defect in material or workmanship. Troubleshooting time, component removal and installation labor cost is excluded from ESG's service part warranty.

16. **CHASSIS AND ACCESSORY WARRANTY.** ESG makes no warranty of Products or component parts manufactured by others and supplied or installed by us, except to the extent there is a defect in workmanship solely related to the installation at ESG's factory. Chassis, component parts and accessories are solely subject to the warranties, if any, as provided by their respective manufacturers. This expressly applies to any chassis-related issues and/or accessory components – regardless of whether said chassis or accessory was provided by ESG at the time of sale. Additionally, unless there is a defect in workmanship solely related to the installation at ESG's factory, ESG shall not administer any chassis, component or accessory manufacturer's warranty directly or as a third party liaison for the Product owner or Dealer. The Product owner shall address any such "non-ESG body" warranty issues directly with their local chassis dealer and/or the manufacturer of the specific accessory, component or equipment with no further liability to ESG.

17. **WE MAKE NO OTHER WARRANTY, EXPRESS OR IMPLIED, AND MAKE NO WARRANTY OF MERCHANTABILITY OR FITNESS FOR ANY PARTICULAR PURPOSE.** Any improper use, operation beyond rated capacity, substitution of non-OEM parts not specifically approved by us in writing, or any alteration or repair by others in such manner as in our judgment affects the Product materially and adversely shall void this Warranty. NO EMPLOYEE OR REPRESENTATIVE OF ESG IS AUTHORIZED TO CHANGE THIS WARRANTY IN ANY WAY OR GRANT ANY OTHER WARRANTY, except as part of a definitive written agreement between the manufacturer and purchaser. The above warranty supersedes and is in lieu of all other warranties whether express or implied.

18. **NO DIRECT OR CONSEQUENTIAL DAMAGES.** ESG hereby disclaims and does not assume any liability whatsoever for costs or expenses related to the use or unavailability of its Product for any reason, including but not limited to accidents, injury, death, late delivery penalties, chassis flooring cost or charges, Product down time, fire damage, loss of Product, in-transit damage or loss, opportunity cost, lost profits, or any other direct, indirect or consequential losses, damages or delay, property damage or injuries or death to persons.

19. **OFF-SITE LOSS DISCLAIMER.** The Purchaser shall bear all risk for damage or loss to the purchaser-owned Product, chassis, accessories, or injury to property or persons, while the Product and/or chassis is either at ESG facilities, enroute to ESG facilities, at or enroute to/from a third party subcontractor of ESG's, in transit to or from Purchaser's or the chassis manufacturer's location, or to/from any third party Dealer or a component supplier's location.

20. **CHOICE OF LAW AND VENUE.** This agreement shall be interpreted according to the laws of the State of Tennessee. Any claims lodged against ESG involving this order in any way must be filed and adjudicated in the Circuit or Federal Court located in Hamilton County, Tennessee, and in the case of appeal, at the situs of their respective appellate Courts.

21. **NON-WAIVER.** Our failure at anytime to exercise any right we may have under this agreement shall not constitute a waiver thereof nor prejudice our right to enforce same thereafter.

22. **SECURITY INTEREST.** The Purchaser hereby grants a first priority purchase money security interest and lien to ESG in and to all Products and goods sold to Purchaser and to which these *Terms & Conditions of Sale* relate, to all chassis and trucks to which any such Products or goods become accessions, and to all Products, proceeds and accessions thereto, from time to time (collectively, the "Product Collateral") to secure all obligations of the Purchaser or any person or entity related to Purchaser, under any agreement, arrangement or financing with or provided by the Company, including without limitation, the obligation to pay the unpaid purchase price of all Products and goods from time to time sold by ESG to Purchaser (collectively, the "Obligations"). The Purchaser represents and warrants that none of the Product Collateral is subject to any other lien, security interest or claim of any type or nature, and covenants that it: (i) will not create or permit to exist any lien, security interest or claim in any portion of the Product Collateral in favor of any other person, (ii) will pay, prior to any delinquency, all taxes (including all property taxes), charges or other obligations which may be owing with respect to the Product Collateral from time to time, (iii) will not change its name, place of incorporation or creation, address or location of the Product Collateral without first providing ESG with not less than 30 days prior written notice, (iv) will take all steps requested by ESG to obtain and maintain the perfection of the security interests granted hereunder, (v) will keep the Product Collateral fully insured against destruction or damage in an amount up to its full insurable value, and will name ESG as additional insured and loss payee under all such insurance policies, and (vi) will cooperate with ESG upon any default of any of the Obligations and will, at the request of ESG, turn over and deliver all Product Collateral to or at the direction of ESG. Purchaser will, at ESG's request, execute such additional security agreements and amendments and additions thereto or hereto as ESG requests in order that it may have at all times a first priority purchase money security interest and lien securing the Obligations. Purchaser hereby authorizes ESG to file financing statements and amendments thereto in all relevant jurisdictions naming Purchaser as debtor and describing the Product Collateral as collateral.

23. **ENTIRE AGREEMENT.** Unless a prevailing purchase contract is in place between the parties hereto, this order, including the above Terms & Conditions of Sale, contains the complete and final agreement between the parties hereto and no Purchaser-supplied purchase order terms, verbal agreement, or other document in any way modifying or supplementing any of these terms and conditions will be binding on ESG unless agreed to in writing by an authorized representative of ESG.

HEIL ENVIRONMENTAL WARRANTY STATEMENT

The Heil Co. d/b/a Heil Environmental ("Heil") warrants its waste collection equipment to be free from defects in material and workmanship under normal single-shift use for a period of Twelve (12) months or 2000 hours of operation (whichever comes first) from the date of equipment In-Service or during the period of coverage offered by an extended warranty program, when operated in accordance with its *Operator's Manual* and proper service and maintenance as described in Heil *Service Bulletins* and *Parts & Service Manuals* are performed. The standard or extended equipment warranty is not transferable except for sales demonstration units.

This warranty is expressly limited to the repair or replacement of any component or part thereof, of any such collection body manufactured by Heil that is proven to Heil's satisfaction to have been defective in material or workmanship. Such components or parts shall be repaired or replaced at Heil's option without cost to the original purchaser for parts and labor provided such unit is returned to an authorized Heil Dealer for replacement or repair. The repair or replacement must be made during the standard or extended warranty coverage period.

Before any warranty can be allowed on new equipment, a validated warranty registration form must be on file with Heil's Customer Service Department within sixty (60) days of the equipment's In-Service date. Wear items are excluded from warranty coverage.

All OEM service parts sold by Heil have a six (6) month warranty from the date of purchase. Aftermarket parts purchased from Heil are supported by a 90-day warranty. The parts warranty covers parts only, providing that factory inspection reveals a defect in material or workmanship. Labor, troubleshooting, equipment downtime, etc. is not covered under the parts warranty policy.

HEIL MAKES NO OTHER WARRANTY, EXPRESSED OR IMPLIED, AND MAKES NO WARRANTY OF MERCHANTABILITY OR OF FITNESS FOR ANY PARTICULAR PURPOSE. HEIL DOES NOT ASSUME ANY LIABILITY OR ACCEPT CLAIMS FOR LOSS OF PROFITS, PRODUCT DOWN TIME OR ANY OTHER DIRECT, INCIDENTAL OR INDIRECT CONSEQUENTIAL LOSSES, COSTS, DAMAGES, OR DELAYS.

Any improper use, operation beyond rated equipment or component capacity, substitution of parts that are not Heil approved, or any alteration or repair by others in such a manner as in Heil's sole judgment affect the product operation or integrity shall void the warranty. Other than the extension of the standard warranty period purchased under a supplemental *Heil Extended Warranty Program*, no employee or representative is authorized to modify this warranty in any way nor shall any other warranties be granted. No dealer-supplied warranty program is endorsed or supported by Heil. Heil retains the right to modify its factory warranty program at any time.

HEIL SALES ORDER COVER PAGE

SF0377U (10-23-15)

Submission Date:	Requested Delivery Date:	Order Submitted By:	Telephone #:

Pre-Approved Delivery Commitment Attached:	Curotto Can to be Ordered?	Heil Model:	Body Size: Cubic Yard Roll Off: Length	Number of Units:

Customer P.O. No:	Regional Manager/KAM:	Discount:	Body Paint Code (DuPont Only):

Pilot Inspection or Unit Review? Date	Freight:	Ship Via:	NJPA:	HGAC:	Terms:

Unit Review? Date	SOAR Form?	SPR Form Attached?	Customer Class:	NJPA Member ID #:

Heil Dealer Information		End-User Information	
Company Name:		Company Name:	
Contact Person:		Contact Person:	
Telephone:	Extension:	Telephone:	Extension:
e-mail Address:		e-mail Address:	
"Bill To" Address		**End User Address**	
Street / P.O. Box:		Street / P.O. Box:	
City:		City:	
State:	Zip:	State:	Zip:

Shipping Information		Chassis Dealer	
Delivery Location:		Company Name:	
Contact Person:		Contact Person:	
Telephone:	Extension:	Telephone:	Extension:
Street / P.O. Box:		Street / P.O. Box:	
City:		City:	
State:	Zip:	State:	Zip:

Expected Chassis Delivery Date:	Is This a Shipper Unit?	Match Cab and Body Paint?	Chassis Paint Code (DuPont Only):
Chassis Make: / Chassis Model/Year: /	Drive Type:	FRONT GAWR: REAR GAWR: GVWR: Usable CA/CT: Wheelbase:	Chassis Axle Type Required of Air Weigh Scales Install:
Engine Make: / Transmission Make:	Engine Torque @ Idle:		Chassis VIN : *Submit Full 17 Digit VIN # to Heil before Chassis Manufacturing Completion
Engine Model: / Transmission Model:	Operate @ Idle?		
Alternative Fuel? Fuel Type Alternative Fuel Installation Type: *Must complete if Alternative Fuel box is selected as "Yes"	Auxiliary Axle? Axle Configuration?	Exhaust Configuration: Note: Odyssey FEL Hydraulics Requires RHS Fuel & DEF Tanks. Automated Side Loaders Lift Location Requires LHS Fuel & DEF Tanks.	Is this a Heil Ready Truck Consignment Chassis? Shipment required within 30 days?

Please Fax to Heil Customer Support with Body Price Guide Pages at 334.460.2110 or e-mail: orders@doveresg.com

ROVVER X

Systems		List Price	2% Discount
E-RX-SYS-Truck_Basic	Standard Rovver X System with VC200 Pendant Controller with Desk Mount and US –Connector PC-VC, RCX90 Camera, RX130 Crawler with Backeye Camera, Inclination, Sonde & Clutch included, RAX300 Cable Reel with Wireless Remote and 300M of Orange Gore Cable. Additional Accessories include Emergency Stop cable for Reel, Mounting Frame for Reel, Pressurization Kit. Wheel Sets include, 6 small standard rubber wheels, 4 Medium rubber wheels, 4 Large Rubber Wheels, 4 Medium Grease Wheels, and wheel extenders.	$ 70,720.00	$ 69,305.60
E-RX-SYS-Truck_Basic 500	Rovver X System with VC200 Pendant Controller with Desk Mount and US –Connector PC-VC, RCX90 Camera, RX130 Crawler with Backeye Camera, Inclination, Sonde & Clutch included, RAX500 Cable Reel with CCU II, Rear Controller, 500M of Orange Gore Cable, and Cable Guide Pulley. Additional Accessories include Emergency Stop cable for Reel and Pressurization Kit. Wheel Sets include, 6 small standard rubber wheels, 4 Medium rubber wheels, 4 Large Rubber Wheels, 4 Medium Grease Wheels, and wheel extenders.	$ 91,520.00	$ 89,689.60
E-RX-SYS-Truck_PRO	Rovver X System with DCX5000 Desk Mounted Controller with CCUI and US –Connector PC-VC, RCX90 Camera, RX130 Crawler with Backeye Camera, Inclination, Sonde & Clutch included, RAX300 Cable Reel with Wireless Remote and 300M of Orange Gore Cable. Additional Accessories include Emergency Stop cable for Reel, Mounting Frame for Reel, Pressurization Kit. Wheel Sets include, 6 small standard rubber wheels, 4 Medium rubber wheels, 4 Large Rubber Wheels, 4 Medium Grease Wheels, and wheel extenders.	$ 79,040.00	$ 77,459.20
E-RX-SYS-Truck_PRO 500	Rovver X System with DCX5000 Desk Mounted Controller with CCUI and US –Connector PC-VC, RCX90 Camera, RX130 Crawler with Backeye Camera, Inclination, Sonde & Clutch included, RAX500 Cable Reel with CCU II, Rear Controller, 500M of Orange Gore Cable, and Cable Guide Pulley. Additional Accessories include Emergency Stop cable for Reel, and Pressurization Kit. Wheel Sets include, 6 small standard rubber wheels, 4 Medium rubber wheels, 4 Large Rubber Wheels, 4 Medium Grease Wheels, and wheel extenders.	$ 98,800.00	$ 96,824.00
E-R-SYS-SAT_ADD	(SAT System in addition to RX PRO System) Rovver X SAT System includes RAXSAT 150 Cable Reel with 150M Standard Cable and 30M Pushrod cable. RX140 SAT Crawler with additional wheels, PTP70 Pan & Tilt Camera with RX Adaptor, set of 5 Guide Pipes, and double cable Guide Pulley.	$ 78,000.00	$ 76,440.00
E-RX-SYS-SAT_DCX5000	(SAT System in addition to RX Basic System) Rovver X SAT System includes RAXSAT 150 Cable Reel with 150M Standard Cable and 30M Pushrod cable. DCX5000 Desk Mounted Controller with CCUI RX140 SAT Crawler with additional wheels, PTP70 Pan & Tilt Camera with RX Adaptor, set of 5 Guide Pipes, and double cable Guide Pulley.	$ 93,600.00	$ 91,728.00

E-RX-SYS-SAT	(Complete RX SAT System - no Mainline Crawler or Camera included) Rovver X SAT System includes RAXSAT 150 Cable Reel with 150M Standard Cable and 30M Pushrod cable, RAX300 Cable Reel with Wireless Remote, Mounting Frame, Emergency Stop Cable, and 300M Cable. DCX5000 Desk Mounted Controller with CCUI RX140 SAT Crawler with additional wheels, PTP70 Pan & Tilt Camera with RX Adaptor, set of 5 Guide Pipes, and double cable Guide Pulley.	$ 114,400.00	$ 112,112.00
E-RX-SYS-SAT_Complete	(RX & SAT System Complete with Mainline Crawler and Camera) Rovver X SAT System includes RAXSAT 150 Cable Reel with 150M Standard Cable and 30M Pushrod cable. DCX5000 Desk Mounted Controller with CCUI RX140 SAT Crawler with additional wheels, PTP70 Pan & Tilt Camera with RX Adaptor, set of 5 Guide Pipes, and double cable Guide Pulley. Rovver X System RCX90 Camera, RX130 Crawler with Backeye Camera, Inclination, Sonde & Clutch included, RAX300 Cable Reel with Wireless Remote and 300M of Orange Gore Cable. Additional Accessories include Emergency Stop cable for Reel, Mounting Frame for Reel, Pressurization Kit. Wheel Sets include, 6 small standard rubber wheels, 4 Medium rubber wheels, 4 Large Rubber Wheels, 4 Medium Grease Wheels, and wheel extenders.	$ 145,600.00	$ 142,688.00
E-RX-SYS-Industrial	Rovver X System with VC200 Pendant Controller with US –Connector PC-VC, RCX90 Camera, RX130 Crawler with Backeye Camera, Inclination, Sonde & Clutch included, RMX100 Reel with Cases and Electronics, 100 Meters of Cable Included. Wheel Sets include, 6 small standard rubber wheels, 4 Medium rubber wheels, 4 Large Rubber Wheels, 4 Medium Grease Wheels, and wheel extenders.	$ 55,120.00	$ 54,017.60
E-RX-SYS-Portable	Rovver X System with VC200 Pendant Controller with US –Connector PC-VC, RCX90 Camera, RX130 Crawler with Backeye Camera, Inclination, Sonde & Clutch included, RMX200 Manual Cable Reel with 200 Meters of Cable and Pendant Mount. Wheel Sets include, 6 small standard rubber wheels, 4 Medium rubber wheels, 4 Large Rubber Wheels, 4 Medium Grease Wheels, and wheel extenders.	$ 55,120.00	$ 54,017.60
		$ -	$ -
Crawlers		$ -	$ -
E-555-0900-00	RX95 Crawler - Steerable, with 2 High Performance Motors and 6 wheel drive. Weight approx 4kg, brass, for diameters from 100 up to approx 200mm, including standard wheels. With pressure indicator, inclinationa nd tilt sensors, Location Transmitter.	$ 13,000.00	$ 12,740.00
E-560-0900-01	ROVVER X 130 Crawler - Steerable, with 2 High Performance Motors and 6 wheel drive. Weight appox 8kg, anodized aluminium, for diameters from 150 up to appox 400 mm, including standard wheels (6x 080-0520-00). With pressure indicator, inclination and tilt sensors, Location Transmitter, Backey camera and clutch.	$ 17,160.00	$ 16,816.80
E-558-0900-00	ROVVER X 400 Crawler - Steerable, with 2 high performance engines and a 4 wheel drive, large ground clearance, electrically operated 2 shift gearbox and electrically operated clutch.	$ 54,392.00	$ 53,304.16
E-999-0053-00	RAXSAT140 Crawler	$ 41,600.00	$ 40,768.00
Cameras			

E-554-0900-00	RAC50 Axial Camera - High Resolution CM0S color camera with 0.025lux low light sensitivity, 420TVL horizontal resolution, fixed Iris, fixed focus, auto shutter function, high power LED's and 60 degree diagonal angle of view	$ 5,200.00	$ 5,096.00
E-561-0900-00	RCX90 Camera - High resolution CCD Colour camera with Zoom (10x optical and 12x digital), light sensitivity, 1 Lux, Shutter (automatic and manual), auto focus, manual and auto function, buiid in LED, angle of view ca 65 degrees. 2x 135 degree tilt and ...	$ 24,440.00	$ 23,951.20
E-581-0900-00	PTP70II Camera for RX/RXSAT Systems (Includes crawler adaptor)	$ 14,040.00	$ 13,759.20
Cable Reels			
E-563-0900-00	ROVVER X Cable Reel RMX200 Manual - for portable system with slip ring and meter - counter, splash proff. Max Cable length 200M (cable not included)	$ 7,800.00	$ 7,644.00
E-562-0900-00	ROVVER X Motorized Cable Reel RAX300 - Automatic, meter-counter, slash-proof, for up to 300M Cable. Power supply 115 or 230 volts. For horizontal inspections. Connection for Pendant Conltroller. Incl. Remote Control. (Cable not included)	$ 16,120.00	$ 15,797.60
E-590-0900-00	ROVVER X Motorized Cable Reel RAX500 - Automatic for up to 500M Cable. Comes with Cable Pulley, and Rear Pendant Controls. (Cable not included) Also requires CCUII to operate.	$ 26,000.00	$ 25,480.00
E-551-0900-00	RMX100 Reel / Cases / Electronics - for remote industrial type inspections - (Cable not included - 100M Max)	$ 9,360.00	$ 9,172.80
Control Unit			
E-568-0900-00	ROVVER X Vision Control - Multi functional control panel VC200 Vision Control, with daylight viewable 800 x 600 Touch Screen display. MPEG4 video encoding and storage on hard disk drive and USB Stick	$ 11,960.00	$ 11,720.80
E-586-0920-00	DCX5000 Pendant with CCUI	$ 20,800.00	$ 20,384.00
E-588-0900-00	CCUII (for RAX500 Cable Reel)	$ 9,360.00	$ 9,172.80
Cable			
E-200-9100-01	SV & RX Camera Cable Gore Orange 100M Complete.	$ 4,160.00	$ 4,076.80
E-200-9200-01	SV & RX Camera Cable Gore Orange 200M Complete.	$ 6,240.00	$ 6,115.20
E-200-9300-01	SV & RX Camera Cable Gore Orange 300M Complete.	$ 6,760.00	$ 6,624.80
E-200-9350-01	SV & RX Camera Cable, Orange Gore 350M Complete		
E-200-9500-00	SV Orange Advanced Cable 500M complete assembly	$ 10,608.00	$ 10,395.84
DigiSewer			

E-557-0900-00	ROVVER X DigiSewer DS3 Camera (Includes USB Box 057-0930-00 and WinCan Module	$ 54,080.00	$ 52,998.40
E-571-0900-00	Laser Ring for DS3 ROVVER X	$ 7,280.00	$ 7,134.40
E-556-0950-00	Auxiliary Light RAL1000 for DS3	$ 4,160.00	$ 4,076.80
Accessories			
E-564-0900-00	Remote Lift Accessory - Camera Elevator Kit for RX130 - for pipes with 12" diameter and larger, raises the RCX90 on the RX130 Crawler	$ 12,480.00	$ 12,230.40
E-569-0900-00	ROVVER 130X Large-Diameter Carriage RCR1000 - Extends the use of the ROVVER 130X crawler for pipes from 24" diameter and larger.	$ 10,400.00	$ 10,192.00
E-559-0900-00	LED Auxiliary Light with Backeye Camera for ROVVER X 130	$ 4,680.00	$ 4,586.40
E-567-0900-00	LED Auxiliary Light for ROVVER X 130 - high powered LED auxiliary light with reflectors.	$ 3,120.00	$ 3,057.60
E-001-RX Dolly	Dolly for ROVVER X System	$ 1,820.00	$ 1,783.60

SuperVision / SAT

SV SAT BASE Systems		**List Price**	**2% Discount**
E-050-0000-SAT_PT	SV SAT System - Includes SVRSAT 140 crawler with wheel sets up to 600 mm pipe, SVASAT120 cable reel with 90M SV Cable and 30M of push rod, PTP70 NTSC Agilios Camera Head, and Bottom Roller	$ 145,600.00	$ 142,688.00
E-050-SV-SAT	SV SAT System Complete - includes SVRSAT140 Crawler, SAT120 Cable Reel, SV350 Cable Reel with Guide Pully, PTP70 Camera, CCU, Desk Pendant, Hand Pendant, Double Manhole Roller.	$ 91,520.00	$ 89,689.60
SuperVision BASE Systems			
E-050-0001-140	SVR140 Zoom Package-Power Control Unit with textgenerator & LCD display. Pendant Controller, Medium Motorized Cable Reel with 350M of Cable, Cable Guide Pulley, Flexible Cable Guide Pulley for Manhole-bottom; Pan & Tilt ZOOM Camera,140 Medium Steerable...	$ 104,000.00	$ 101,920.00
E-050-0001-250	SVR250 Package SVR250 ZOOM Package-Power Control Unit with textgenerator & LCD display. Pendant Controller, Motorized Cable Reel with 350M of Cable, Cable Guide Pulley For SVA350, Flexible Cable Guide Pulley for Manhole-bottom; Pan & Tilt ZOOM Camera,2...	$ 108,264.00	$ 106,098.72
E-050-0010-140	SVR140 ZOOM LONG RANGE Package-Power Control Unit with textgenerator & LCD display. Pendant Controller, Motorized Cable Reel with 500M of Cable, Cable Guide Pulley For SVA500, Flexible Cable Guide Pulley for Manhole-bottom; Pan & Tilt ZOOM Camera,140 M...	$ 111,384.00	$ 109,156.32
Crawlers			
E-503-0900-00	SUPERVISION 95 Small Steerable Crawler, complete stainless steel body, 6 wheel steerable drive, for diameters from 4 in /100mm up to approx. 12 in/300mm, including 2 sets of additional wheels and auxiliary lights.	$ 16,120.00	$ 15,797.60
E-504-0950-00	SUPERVISION 140 Medium Steerable Crawler, 6 wheel steerable drive for diameter from 6 in. to 36 in. Includes 2 sets of additional wheels auxiliary lights, sensors for measuring inclination and internal pressure.	$ 24,440.00	$ 23,951.20
E-505-0950-00	SUPERVISION 250 Large Steerable Crawler, Aluminum and stainless steel body, 6 wheel steerable drive and electrical clutch. For diameters from 10 in. to 78 in. Includes 2 sets of additional wheels and Solarc auxiliary lights.	$ 29,640.00	$ 29,047.20
E-536-0950-01	Supervision SAT System SVRSAT140 crawler incl. wheels sets up to 600 mm pipe	$ 47,840.00	$ 46,883.20

Cameras			
E-501-0950-00	SV Pan & Tilt Camera SK75SV - 440.000 pixels, 1 Lux light-sensitivity, resolution 460 HTV lines, focus, integrated LED- light ring, FOV is 95 degrees, 2 x 135 degree tilt and 360 degree rotation. Dual lasers for measurement capability.	$ 22,880.00	$ 22,422.40
E-507-0950-00	SUPERVISION Pan-Tilt-Zoom Camera SKZ100SV; 440.000 pixels with 4X optical zoom and 4X digital zoom. 1 Lux light-sensitivity, resolution of 460 HTV lines with iris, focus, shutter and gain controls. Dual lasers for measurement capability.	$ 26,000.00	$ 25,480.00
E-541-0950-00	Agilios/SAT Axial Camera AC42 NTSC	$ 9,152.00	$ 8,968.96
E-533-0950-00	PTP70 Pan & Tilt Camera Head NTSC	$ 14,040.00	$ 13,759.20
DigiSewer			
E-057-0900-01	DigiSewer Camera for Supervision - Includes USB Adaptor Box and Software	$ 54,080.00	$ 52,998.40
E-571-0900-00	Laserring for SV DigiSewer Camera	$ 7,280.00	$ 7,134.40
Cable Reels			
E-516-0900-00	SV Manual Cable Reel 300 with motorized winding-support; meter counter, cable guide can be adjusted in an angle from 0 deg. To 45 deg., splash-waterproof. Max. cable length 300m. Must add cable.	$ 8,216.00	$ 8,051.68
E-508-0900-01	SV Motorized Cable Reel SVA500 - Semi-automatic, aluminum framework, cable guide, meter-counter, splash-water proof. Max. cable length 1,640'/500 m. Must add cable	$ 21,294.00	$ 20,868.12
E-527-0900-00	SV Medium Motorized Cable Reel (TR350SV)It will hold up to 350m or 1147 feet. Includes Cable Guide Pully - Does not include Cable	$ 19,240.00	$ 18,855.20
E-537-0900-01	Supervision SAT System SVASAT120 cable reel with 90 m SV cable and 30 m of push rod	$ 41,600.00	$ 40,768.00
Control Unit / Pendant			
E-509-0900-01	Control Unit SUPERVISION for SVASAT System	$ 23,400.00	$ 22,932.00
E-510-0910-01	Pendant Controller NTS for SUPERVISION SVASAT System	$ 10,920.00	$ 10,701.60

Crawler Accessories

Wheels for Crawler Systems		List Price	2% Discount
E-008-0803-00	ROVVER X 95 / SV 95 - (1) Super Aggressive Medium Wheel for 4" line (BLUE WITH Spikes)	$ 323.44	$ 316.97
E-008-0803-01	ROVVERX 95 / SV95 - (1) Super Aggressive Medium Wheel for 4" line (BLUE WITH Grit)	$ 323.44	$ 316.97
E-026-0800-06	RX130, SV140, SVSAT140 - - (1) Super Aggressive Small Wheel for 6" line (BLUE WITH Spikes)	$ 339.51	$ 332.72
E-026-0800-11	RX130, SV140, SVSAT140 -- (1) Super Aggressive Medium Wheel for 8" line (BLUE WITH Spikes)	$ 339.51	$ 332.72
E-040-0000-12	SV250 / RX Extension Extra large pnuematic tyres for SV250	$ 416.00	$ 407.68
E-080-0500-00	Qty 1 Standard Rubber Wheel for SV95 (6 per crawler)	$ 97.71	$ 95.75
E-080-0510-00	Qty 1 Small Wide Rubber Wheel for SV95 & RX95 (4 per crawler)	$ 118.04	$ 115.68
E-080-0515-00	Qty 1 Medium Rubber Wheel for RX95and SV95 (4 per Crawler)	$ 260.00	$ 254.80
E-080-0520-00	Qty 1 Small Standard Rubber Wheel for RX130, SV140, SVRSAT140 Crawlers (6 for RX130 6 for SV140 and 8 for SAT140)	$ 260.00	$ 254.80
E-080-0525-00	Qty 1 Large Rubber Wheel for RX95 and SV95 (4 Per Crawler)	$ 26.00	$ 25.48
E-080-0535-00	Qty 1 Medium Rubber Wheel for RX130, SV140, and SVRSAT140 (4 for RX130, 4 for SV140, 6 for SVRSAT140)	$ 260.00	$ 254.80
E-080-0540-00	Qty 1 Small Rubber Wheel for SV250 (6 Per Crawler)	$ 260.00	$ 254.80
E-080-0545-00	Qty 1 Large Rubber Wheel for RX130, SV140, and SVRSAT140 (4 forRX130, 4 for SV140, 6 for SVRSAT140)	$ 260.00	$ 254.80
E-080-0550-00	Qty 1 Medium Rubber Wheel for SV250 (6 Per Crawler)	$ 260.00	$ 254.80
E-080-0555-00	Qty 1 XXL Wheel for RX130, SV140, and SVRSAT140 (4 for RX130, 4 for SV140, 6 for SVRSAT140)	$ 342.16	$ 335.32
E-080-0560-00	Qty 1 XXL Wheel for SVR250 (4 for each)	$ 342.16	$ 335.32
E-080-0565-00	Qty 1 Large Balloon Wheel for SVR250 (4 Per Crawler)	$ 384.80	$ 377.10
E-080-0600-00	Qty 1 Small Grease Wheel for RX95and SVR95 (4 per crawler)	$ 289.12	$ 283.34
E-080-0605-00	Qty 1 Medium Grease Wheel for RX95 / SVR95 (4 per crawler)	$ 289.12	$ 283.34
E-080-0610-00	Qty 1 Small Grease Wheel for RX130, SVR140, and SVRSAT140 (4 for RX130, 4 for SVR140, 6 for SVRSAT140)	$ 296.40	$ 290.47
E-080-0625-00	Qty 1 Large Grease Wheel for SVR95 (4 per crawler)	$ 375.44	$ 367.93

E-080-0630-00	Qty 1 Medium Grease Wheel for RX130, SV140 and SVRSAT140 (4 for RX130, 4 for SV140, 6 for SVRSAT140)	$ 374.40	$ 366.91
E-080-0635-00	Qty 1 Large Grease Wheel for RX130, SV140, and SVRSAT140 (4 for RX130, 4 for SV140, 6 for SVRSAT140)	$ 426.40	$ 417.87
Accessories for Crawler Systems			
E-000-0020-00	CO2 Canister (74g) Shipping by Ground Only	$ 21.84	$ 21.40
E-000-0035-00	Top Manhole Cable Roller (part# (37560); Aluminum frame and rubber wheel with bearings, protects cable from manhole top cover edge and reduces friction to improve crawler performance	$ 340.15	$ 333.35
E-000-0036-00	Tyger® Tail 2" for manhole bottom cable protection; 2 inch diameter rubber sleeve to protect cable from manhole bottom pipe entry.	$ 69.28	$ 67.90
E-035-0209-00	RA150 Flexible Cable Guide Pulley for Manhole-bottom; best way to manage cable and have least amount of friction on cable and crawler.	$ 662.48	$ 649.23
E-512-0901-00	SV and Rovver X Cable Retermination Kit	$ 823.89	$ 807.41
E-512-0902-00	Cable Retermination Kit for SAT Cable Reel	$ 515.84	$ 505.52
E-PRE-0000-01	Main Pressurization Kit - For all systems	$ 364.00	$ 356.72

	VeriSight Pro		
Systems		**List Price**	**2% Discount**
E-V-SYS-090-000	Verisight PRO Push Camera System - Standard Package with 200' cable, self-leveling camera, tri-frequency sonde, battery powered control unit with viewing, control, text generation, recording and digital output, accessories case with USB memory stick, 3 skids, and tooling.	$ 9,952.80	$ 9,753.74
E-V-SYS-090-100	Verisight PRO System - Standard Package with 330' cable, self-leveling camera, tri-frequency sonde, battery powered control unit with viewing, control, text generation, recording and digital output, accessories case with USB memory stick, 3 skids, and tooling.	$ 10,612.16	$ 10,399.92
E-V-SYS-090-400	Verisight PRO System - Standard Package with 130' Cable, self leveling camera, tri frequency sonde, battery powered control unit with viewing, control, text generation, recording and digital output, accessories case with USB memory stick, 3 skids, and tooling.	$ 8,840.00	$ 8,663.20
E-V-SYS-360-000	VeriSight Pro 360 200' Pan/Tilt Push Camera with Digital Viewer/Recorder - Standard Package with 200' cable, pan/tilt camera, tri-frequency sonde, battery powered control unit with viewing, control, text generation, recording and digital output, accessories case with USB memory stick, 2 skids, and tooling.	$ 22,880.00	$ 22,422.40
E-V-SYS-360-119	VeriSight Pro 360 330' Pan/Tilt Push Camera with Digital Viewer/Recorder - Standard Package with 330' cable, pan/tilt camera, tri-frequency sonde, battery powered control unit with viewing, control, text generation, recording and digital output, accessories case with USB memory stick, 2 skids, and tooling.	$ 24,960.00	$ 24,460.80
E-V-SYS-360-419	VeriSight Pro 360 130' Pan/Tilt Push Camera with Digital Viewer/Recorder - Standard Package with 130' cable, pan/tilt camera, tri-frequency sonde, battery powered control unit with viewing, control, text generation, recording and digital output, accessories case with USB memory stick, 2 skids, and tooling.	$ 21,840.00	$ 21,403.20
Accessories			

E-V-ASS-002-008	1500mm Roller Skid (8"/9" pipes)	$ 681.20	$ 667.58
E-V-ASS-002-009	200mm Roller Skid (12"-15" pipes)	$ 873.60	$ 856.13
E-ASS-001-632	External Video Input lead - NTSC for Verisight Pro - Can be used with QVH and other video inputs.	$ 243.36	$ 238.49
Software			
E-V-PRO-PIP-REP	Pro Pipe Reporting Software	$ 2,059.20	$ 2,018.02
Locators			
E-LF2200-FV10	LF 2200 Multi frequency digital receiver with hard carrying case, FV10 transmitter and spring carrier	$ 3,120.00	$ 3,057.60
E-LF2200-FV20	LF 2200 Multi frequency digital receiver with hard carrying case, FV20 transmitter and spring carrier	$ 3,432.00	$ 3,363.36
E-LF2200-FV40	LF 2200 Multi frequency digital receiver with hard carrying case, FV40 transmitter and spring carrier	$ 4,160.00	$ 4,076.80

QuickView Haloptic

Systems		**List Price**	**2% Dicscount**
E-QV_Haloptic_16	QuickView Haloptic System NTSC with 16' Carbon Fiber Pole and Dual Wireless Monitors	$ 15,600.00	$ 15,288.00
E-QV_Haloptic_24	QuickView Haloptic System NTSC with 24' Carbon Fiber Pole and Wireless Dual Monitors	$ 15,600.00	$ 15,288.00
E-QV_Haloptic_30	QuickView Haloptic System NTSC with 30' Carbon Fiber Pole and Dual Wireless Monitors	$ 17,160.00	$ 16,816.80
Accessories			
E-QV-Tripod	Fiberglass Tri-Pod with Multi Radial pole Clamp and Pole Rotator and Fixed Mounting Plate	$ 26,000.00	$ 25,480.00
E-QVH-58091	QVH 3.6 Rear View Camera NTSC	$ 1,560.00	$ 1,528.80
E-QVH_Bumpers	Set of 3 HD Bumper Guards for QV Protection (See BOM)	$ 156.00	$ 152.88
E-QVH_Diffuser	QVH Diffuser with Clip (See BOM)	$ 78.00	$ 76.44
E-QVH_Measurement	Lens based focus distance measurement software	$ 1,248.00	$ 1,223.04
E-QVH-58093-6	QV 3.6 Light Engine Assembly	$ 624.00	$ 611.52
E-5100-1021	Sanyo HR-4/3Faux Battery Pack	$ 754.00	$ 738.92
E-5100-6008	QV 50' "Extreme"armored cable; works with all QuickView models and poles from 6 to 24 ft. (5 year warranty)	$ 988.00	$ 968.24
E-5100-6009	QV 40' cable, works with all QV models (3 year warranty)	$ 868.40	$ 851.03
E-5100-CIG	QUICKVIEW 20' 12Vdc Cigarette Lighter Power Cord - Powers on CCU, not a battery charger	$ 124.80	$ 122.30
E-33775	QV Heavy Duty Shipping & Storage case. Will house the pole, head, stand-off and cable. 8" Dia X 96" in Length.	$ 267.28	$ 261.93
E-5100-3021	QV Friwo Single Bay Charger	$ 541.84	$ 531.00
Poles			
E-5100-3600	QV Carbon Fiber extension that fits all CF telescoping poles,adds another 6ft to inspection depth. (See BOM)	$ 650.00	$ 637.00
E-5100-4006	QuickView Drop Line Attachment - Carbon fiber pole(smallest), neoprene foot, and compression spring (with standoff mount, brass bushing, spring support and spring support clamp) - (See BOM)	$ 686.40	$ 672.67
E-QVH_16_CF	QVH 16' Carbon Fiber pole complete with Standoff	$ 1,976.00	$ 1,936.48
E-QVH_24_CF	QVH 24' Carbon Fiber pole complete with Standoff	$ 1,976.00	$ 1,936.48
E-QVH_30_CF	QVH 30' Carbon Fiber pole complete with Standoff	$ 3,120.00	$ 3,057.60
Viewing Devices			
E-CCU205	Mini-Cam Solo pro Digital Control Unit (English) includes 8 GB USB Memory Stick, 4 GB SDHC Memory card, and extenal video input lead - Solo Pro	$ 4,680.00	$ 4,586.40
E-QV-HC8418	3.6" Monitor/DVR with wireless option	$ 520.00	$ 509.60
E-QV_Dual Monitors	Dual Wireless Monitors with mounting bracket and charger (See BOM)	$ 1,560.00	$ 1,528.80

JETSCAN

		List Price	2% Discount
E-JETSCAN	JetScan HD Video Nozzle - Complete system with camera, jetter sled, set of 6 nozzle plugs, camera case, battery charger, two 16 GB SD cards, two spare windows, two spare window o-rings, spare window screws, torx wrench, spare cap o-ring, Rain-X and Loctite.	$ 13,260.00	$ 12,994.80
E-JCAM-151	Roller Extension - Set of three boto on extensions that adapt Jetscan for inspection pipe larger than 15"	$ 1,248.00	$ 1,223.04
E-JETSCAN-iPAD	iPAD Mini - 16GB, wiFi only with case and SD card adapter	$ 598.00	$ 586.04

Vehicle Build Outs

Outpost System Enclosures		List Price	2% Discount
E-Outpost	Outpost Portable Enclosure/Inspection Platform; Aluminum Box is 46.5" H x 42.25" W x 42.25" D. interior painted non-glaring black. Box interior has shelving for monitor, VCR, CCU and Cable reel, Single Tool drawer.	$ 7,410.00	$ 7,261.80
E-Outpost-SV	SV Outpost Portable Enclosure/Inspection Platform; Aluminum Box	$ 9,726.08	$ 9,531.56
E-Outp-GenslideOut	Outpost Generator Slide-out Upgrade; A slide tray made to hold the generator in the upper right rear compartment would be supplied. The generator will slide out of the compartment approximately 24 inches permitting the generator to stay fixed on the t...	$ 644.80	$ 631.90
E-Outp-Washdown	Outpost Washdown System Upgrade; The wash down system is to include a 50 ft. hose reel, housed in the upper left rear compartment. A fresh water tank is included with the 110 volt pump with 40 psi, as well as an outside fresh water fill.	$ 1,830.40	$ 1,793.79
E-U2000	U2000 Honda 2KW Generator	$ 1,716.00	$ 1,681.68

Buildout to Customer Supplied Chassis

Buildout to Customer Supplied Chassis		List Price	2% Discount	Dnet
Sprinter	**Build out to customer supplied chassis - specifications attached - you must include one power option**	**$ 16,757.00**	**$ 16,422.00**	**$ 14,495.00**
Available Options				
MEPS Unit Package	6.3Kw MEPS Power Unit Package	$ 13,139.00	$ 12,876.00	$ 11,365.00
Wall Mounted Heater	Wall Mounted Heater	$ 260.00	$ 254.00	$ 225.00
Corner Mounted Spotlights	(2) Corner mounted LED Work Area Spotlights	$ 231.00	$ 226.00	$ 200.00
110 Swing out work light	Swing out Work Light	$ 173.00	$ 170.00	$ 150.00
Hand Spot	12V Hand Held Spot	$ 148.00	$ 145.00	$ 128.00
Awning	Work Area Rear Awning	$ 1,248.00	$ 1,223.00	$ 1,080.00
4 corner mounted LED Strobes	4 corner mounted LED Strobes	$ 578.00	$ 566.00	$ 500.00
Rear Arrow Board	Rear Roof Mounted Arrow Board	$ 1,064.00	$ 1,042.00	$ 920.00
Front Arrow Board	Front Roof mounted arrow board	$ 1,064.00	$ 1,042.00	$ 920.00
Front Roof Mounted Strobe	Front Roof Mounted Strobe	$ 151.00	$ 148.00	$ 131.00
Rear Roof Mounted Strobe	Rear Roof Mounted Strobe	$ 151.00	$ 148.00	$ 131.00
Backup Alarm	Back-up Alarm	$ 296.00	$ 290.00	$ 256.00
Backup Camera	Back-up Camera	$ 520.00	$ 510.00	$ 450.00
Insulated Ceilings and Walls	Full Insulation of the Ceilings and Walls	$ 1,186.00	$ 1,162.00	$ 1,026.00
Cabinet Light	Remote Cabinet LED with Actuators	$ 577.00	$ 565.00	$ 500.00
Tool Package	Shovel, Pick, Sledge Hammer, & Manhole Hook	$ 242.00	$ 237.00	$ 209.00
Sink	Sink with Installation and Grey Water Tank	$ 850.00	$ 833.00	$ 735.00
Roof mounted AC	Roof Mounted AC unit - includes Wiring Harness, Digital Thermostat, and Installation	$ 1,350.00	$ 1,323.00	$ 1,167.00
Additional Viewing Monitor	19" Tru-Vu Viewing Monitor (required for SAT)	$ 665.00	$ 652.00	$ 575.00
Sunlight Readable Monitor	19" Tru-Vu Sunlight Readable Monitor	$ 1,271.00	$ 1,246.00	$ 1,103.00
Computer Monitor	19" Tru-Vu Computer Monitor (required for Rack Mount)	$ 665.00	$ 652.00	$ 575.00
Keyboard Tray	Under-desk mounted Keyboard Tray (required for SAT, optional for Rack Mount)	$ 133.00	$ 130.00	$ 115.00
Multi-Monitor Mount	Multi-Monitor Mount for Office Area (required for SAT and/or Rack Mount)	$ 462.00	$ 453.00	$ 400.00
Color Printer	Color Printer	$ 292.00	$ 286.00	$ 253.00
DVD Recorder	Dual Function DVD Recorder	$ 577.00	$ 565.00	$ 499.00
Pedestal Crane	Western Mule Pedestal Crane	$ 4,232.00	$ 4,147.00	$ 3,670.00
Metal Detector	Metal Detector	$ 885.00	$ 867.00	$ 767.00
12V Receptacle	12 V Receptable in Rear	$ 163.00	$ 160.00	$ 142.00
4 1/2" Bench Vise	4 1/2" Bench Vise	$ 213.00	$ 209.00	$ 185.00
Magnetic Tool Holders over Workbench	Magnetic Tool Holders over Workbench	$ 139.00	$ 136.00	$ 120.00
Peg Board over Workbench	Peg Board over Workbench	$ 139.00	$ 136.00	$ 120.00
Carbon Monoxide Detector	Battery Operated Carbon Monoxide Detector in office	$ 122.00	$ 119.00	$ 105.00
Front Bumper Cone Storage	Front Bumper Cone Storage	$ 115.00	$ 113.00	$ 100.00
Nissan NV	**Build out to customer supplied chassis - specifications attached - you must include one power option**	**$ 14,580.00**	**$ 14,288.00**	**$ 12,612.00**
Available Options				

MEPS Power Unit Package	6.3Kw MEPS Power Unit Package	$ 13,006.00	$ 12,746.00	$ 11,250.00
Inverter System Package	3.0 KW Xantrax Pure Sine Wave Inverter & Control Panel	$ 3,930.00	$ 3,851.00	$ 3,400.00
Wall Mounted Heater	Wall Mounted Heater	$ 260.00	$ 254.00	$ 225.00
Corner Mounted Spotlights	(2) Corner mounted LED Work Area Spotlights	$ 231.00	$ 226.00	$ 200.00
110 Swing out work light	Swing out Work Light	$ 173.00	$ 170.00	$ 150.00
Hand Spot	12V Hand Held Spot	$ 148.00	$ 145.00	$ 128.00
4 corner mounted LED Strobes	4 corner mounted LED Strobes	$ 578.00	$ 566.00	$ 500.00
Rear Arrow Board	Rear Roof Mounted Arrow Board	$ 1,064.00	$ 1,042.00	$ 920.00
Front Arrow Board	Front Roof mounted arrow board	$ 1,064.00	$ 1,042.00	$ 920.00
Front Roof Mounted Strobe	Front Roof Mounted Strobe	$ 151.00	$ 148.00	$ 131.00
Rear Roof Mounted Strobe	Rear Roof Mounted Strobe	$ 151.00	$ 148.00	$ 131.00
Backup Alarm	Back-up Alarm	$ 296.00	$ 290.00	$ 256.00
Backup Camera	Back-up Camera	$ 520.00	$ 510.00	$ 450.00
Insulated Ceilings and Walls	Full Insulation of the Ceilings and Walls	$ 1,186.00	$ 1,162.00	$ 1,026.00
Cabinet Light	Remote Cabinet LED with Actuators	$ 577.00	$ 565.00	$ 500.00
Tool Package	Shovel, Pick, Sledge Hammer, & Manhole Hook	$ 242.00	$ 237.00	$ 209.00
Additional Viewing Monitor	19" Tru-Vu Viewing Monitor (required for SAT)	$ 665.00	$ 652.00	$ 575.00
Sunlight Readable Monitor	19" Tru-Vu Sunlight Readable Monitor	$ 1,271.00	$ 1,246.00	$ 1,103.00
Computer Monitor	19" Tru-Vu Computer Monitor (required for Rack Mount)	$ 665.00	$ 652.00	$ 575.00
Keyboard Tray	Under-desk mounted Keyboard Tray (required for SAT, optional for Rack Mount)	$ 133.00	$ 130.00	$ 115.00
Multi-Monitor Mount	Multi-Monitor Mount for Office Area (required for SAT and/or Rack Mount)	$ 462.00	$ 453.00	$ 400.00
Color Printer	Color Printer	$ 292.00	$ 286.00	$ 253.00
DVD Recorder	Dual Function DVD Recorder	$ 577.00	$ 565.00	$ 499.00
Metal Detector	Metal Detector	$ 885.00	$ 867.00	$ 767.00
12V Receptacle	12 V Receptable in Rear	$ 163.00	$ 160.00	$ 142.00
4 1/2" Bench Vise	4 1/2" Bench Vise	$ 213.00	$ 209.00	$ 185.00
Magnetic Tool Holders over Workbench	Magnetic Tool Holders over Workbench	$ 139.00	$ 136.00	$ 120.00
Peg Board over Workbench	Peg Board over Workbench	$ 139.00	$ 136.00	$ 120.00
Carbon Monoxide Detector	Battery Operated Carbon Monoxide Detector in office	$ 122.00	$ 119.00	$ 105.00
Front Bumper Cone Storage	Front Bumper Cone Storage	$ 115.00	$ 113.00	$ 100.00
Trailer	**Build out includes a 12 foot trailer - specifications attached - you must include one power option. Based on 12 foot trailer, add $300.00 per extra 2 feet.**	**$ 20,633.00**	**$ 20,220.00**	**$ 17,895.00**
Available Options				
Gas Powered Generator	7K Watt Gas Powered Honda Generator Tongue Mounted with Electric Start, Mounting, and Theft Deterrent Cable	$ 7,032.00	$ 6,891.00	$ 6,083.00
Gas Powered Generator	5.5 Onan Generator with Remote Start Mounted above Desk Surface and Aluminum Cover	$ 10,144.00	$ 9,941.00	$ 8,798.00
Wall Mounted Heater	Wall Mounted Heater	$ 260.00	$ 254.00	$ 225.00
Corner Mounted Spotlights	(2) Corner mounted LED Work Area Spotlights	$ 231.00	$ 226.00	$ 200.00
110 Swing out work light	Swing out Work Light	$ 173.00	$ 170.00	$ 150.00
Hand Spot	12V Hand Held Spot	$ 148.00	$ 145.00	$ 128.00
Awning	Work Area Rear Awning	$ 1,248.00	$ 1,223.00	$ 1,080.00
VSP Storage bracket	VSP Storage Bracket Floor Mounted	$ 231.00	$ 226.00	$ 200.00
4 corner mounted LED Strobes	4 corner mounted LED Strobes	$ 578.00	$ 566.00	$ 500.00
Rear Arrow Board	Rear Roof Mounted Arrow Board	$ 1,064.00	$ 1,042.00	$ 920.00
Front Arrow Board	Front Roof mounted arrow board	$ 1,064.00	$ 1,042.00	$ 920.00
Front Roof Mounted Strobe	Front Roof Mounted Strobe	$ 151.00	$ 148.00	$ 131.00
Rear Roof Mounted Strobe	Rear Roof Mounted Strobe	$ 151.00	$ 148.00	$ 131.00
Backup Camera	Wireless Back-up Camera	$ 520.00	$ 510.00	$ 450.00
Insulated Ceilings and Walls	Full Insulation of the Ceilings and Walls	$ 1,186.00	$ 1,162.00	$ 1,026.00
Cabinet Light	Remote Cabinet LED with Actuators	$ 577.00	$ 565.00	$ 500.00
Tool Package	Shovel, Pick, Sledge Hammer, & Manhole Hook	$ 242.00	$ 237.00	$ 209.00
File Cabinet	2 Drawer Filing Cabinet with Butcher Block Top	$ 173.00	$ 170.00	$ 150.00
Roof mounted AC	Roof Mounted AC unit - includes Wiring Harness, Digital Thermostat, and Installation	$ 1,350.00	$ 1,323.00	$ 1,167.00
Additional Viewing Monitor	19" Tru-Vu Viewing Monitor (required for SAT)	$ 665.00	$ 652.00	$ 575.00
Sunlight Readable Monitor	19" Tru-Vu Sunlight Readable Monitor	$ 1,271.00	$ 1,246.00	$ 1,103.00
Computer Monitor	19" Tru-Vu Computer Monitor (required for Rack Mount)	$ 665.00	$ 652.00	$ 575.00
Keyboard Tray	Under-desk mounted Keyboard Tray (required for SAT, optional for Rack Mount)	$ 133.00	$ 130.00	$ 115.00
Multi-Monitor Mount	Multi-Monitor Mount for Office Area (required for SAT and/or Rack Mount)	$ 462.00	$ 453.00	$ 400.00
Color Printer	Color Printer	$ 292.00	$ 286.00	$ 253.00
DVD Recorder	Dual Function DVD Recorder	$ 577.00	$ 565.00	$ 499.00
Pedestal Crane	Western Mule Pedestal Crane	$ 4,232.00	$ 4,147.00	$ 3,670.00
Cable Reel Support Frame	Support Frame for SAT (optional for RVX)	$ 660.00	$ 647.00	$ 571.00
Bedslide	Bedslide	$ 2,000.00	$ 1,960.00	$ 1,735.00
Pocket Door	Bulkhead Wall Pocket Door	$ 2,499.00	$ 2,449.00	$ 2,167.00
Air Compressor	6 gallon, 150 psi Air Compressor	$ 610.00	$ 598.00	$ 529.00
Metal Detector	Metal Detector	$ 885.00	$ 867.00	$ 767.00

12V Receptacle	12 V Receptable in Rear	$ 163.00	$ 160.00	$ 142.00
4 1/2" Bench Vise	4 1/2" Bench Vise	$ 213.00	$ 209.00	$ 185.00
Magnetic Tool Holders over Workbench	Magnetic Tool Holders over Workbench	$ 139.00	$ 136.00	$ 120.00
Peg Board over Workbench	Peg Board over Workbench	$ 139.00	$ 136.00	$ 120.00
Doggie Door	Doggie Door in Rear Door	$ 634.00	$ 621.00	$ 550.00
Carbon Monoxide Detector	Battery Operated Carbon Monoxide Detector in office	$ 122.00	$ 119.00	$ 105.00
Cargo Van	**Build out to customer supplied chassis - specifications attached - you must include one power option**	**$ 15,504.00**	**$ 15,194.00**	**$ 13,411.00**
Available Options				
MEPS Power Unit Package	6.3Kw MEPS Power Unit Package	$ 12,038.00	$ 11,797.00	$ 10,413.00
Wall Mounted Heater	Wall Mounted Heater	$ 260.00	$ 254.00	$ 225.00
Corner Mounted Spotlights	(2) Corner mounted LED Work Area Spotlights	$ 231.00	$ 226.00	$ 200.00
110 Swing out work light	Swing out Work Light	$ 173.00	$ 170.00	$ 150.00
Hand Spot	12V Hand Held Spot	$ 148.00	$ 145.00	$ 128.00
4 corner mounted LED Strobes	4 corner mounted LED Strobes	$ 578.00	$ 566.00	$ 500.00
Rear Arrow Board	Rear Roof Mounted Arrow Board	$ 1,064.00	$ 1,042.00	$ 920.00
Front Arrow Board	Front Roof mounted arrow board	$ 1,064.00	$ 1,042.00	$ 920.00
Front Roof Mounted Strobe	Front Roof Mounted Strobe	$ 151.00	$ 148.00	$ 131.00
Rear Roof Mounted Strobe	Rear Roof Mounted Strobe	$ 151.00	$ 148.00	$ 131.00
Backup Alarm	Back-up Alarm	$ 296.00	$ 290.00	$ 256.00
Backup Camera	Back-up Camera	$ 520.00	$ 510.00	$ 450.00
Insulated Ceilings and Walls	Full Insulation of the Ceilings and Walls	$ 1,186.00	$ 1,162.00	$ 1,026.00
Cabinet Light	Remote Cabinet LED with Actuators	$ 577.00	$ 565.00	$ 500.00
Tool Package	Shovel, Pick, Sledge Hammer, & Manhole Hook	$ 242.00	$ 237.00	$ 209.00
File Cabinet	Built-in 2 Drawer Filing Cabinet	$ 173.00	$ 170.00	$ 150.00
Additional Viewing Monitor	19" Tru-Vu Viewing Monitor (required for SAT)	$ 665.00	$ 652.00	$ 575.00
Sunlight Readable Monitor	19" Tru-Vu Sunlight Readable Monitor	$ 1,271.00	$ 1,246.00	$ 1,103.00
Computer Monitor	19" Tru-Vu Computer Monitor (required for Rack Mount)	$ 665.00	$ 652.00	$ 575.00
Keyboard Tray	Under-desk mounted Keyboard Tray (required for SAT, optional for Rack Mount)	$ 133.00	$ 130.00	$ 115.00
Multi-Monitor Mount	Multi-Monitor Mount for Office Area (required for SAT and/or Rack Mount)	$ 462.00	$ 453.00	$ 400.00
Color Printer	Color Printer	$ 292.00	$ 286.00	$ 253.00
DVD Recorder	Dual Function DVD Recorder	$ 577.00	$ 565.00	$ 499.00
Pedestal Crane	Western Mule Pedestal Crane	$ 4,232.00	$ 4,147.00	$ 3,670.00
Metal Detector	Metal Detector	$ 885.00	$ 867.00	$ 767.00
12V Receptacle	12 V Receptable in Rear	$ 163.00	$ 160.00	$ 142.00
4 1/2" Bench Vise	4 1/2" Bench Vise	$ 213.00	$ 209.00	$ 185.00
Magnetic Tool Holders over Workbench	Magnetic Tool Holders over Workbench	$ 139.00	$ 136.00	$ 120.00
Peg Board over Workbench	Peg Board over Workbench	$ 139.00	$ 136.00	$ 120.00
Carbon Monoxide Detector	Battery Operated Carbon Monoxide Detector in office	$ 122.00	$ 119.00	$ 105.00
Front Bumper Cone Storage	Front Bumper Cone Storage	$ 115.00	$ 113.00	$ 100.00
Cutaway/Dry Freight box	**Build out to customer supplied chassis - specifications attached - you must include one power option & one body option. Price based on 14 foot box, add 2k per extra 2 feet. Example for a 18 foot box add 4K**	**$ 16,679.00**	**$ 16,345.00**	**$ 14,427.00**
Available Options				
Box Truck Body	14' Aluminum Cutaway Body	$ 14,408.00	$ 14,120.00	$ 12,463.00
Box Truck Body	16' Aluminum Cutaway Body	$ 15,061.00	$ 14,760.00	$ 13,063.00
Box Truck Body	14' Aluminum Dry Freight Body	$ 12,835.00	$ 12,578.00	$ 11,102.00
Box Truck Body	16' Aluminum Dry Freight Body	$ 13,493.00	$ 13,223.00	$ 11,702.00
MEPS Power Unit Package	6.3Kw MEPS Power Unit Package	$ 12,161.00	$ 11,918.00	$ 10,519.00
Diesel Powered Generator Package	6.0 Diesel Powered Generator - Includes Installation, Wiring Harness, Remote Start, and Dedicated Battery	$ 15,748.00	$ 15,433.00	$ 13,658.00
Gas Powered Generator Package	5.5 Gas Powered Onan Generator - Includes Installation, Wiring Harness, Remote Start, and Dedicated Battery	$ 9,813.00	$ 9,617.00	$ 8,511.00
Gas Powered Generator Package	7.0 Gas Powered Onan Generator - Includes Installation, Wiring Harness, Remote Start, and Dedicated Battery	$ 11,831.00	$ 11,594.00	$ 10,261.00
Wall Mounted Heater	Wall Mounted Heater	$ 260.00	$ 254.00	$ 225.00
Corner Mounted Spotlights	(2) Corner mounted LED Work Area Spotlights	$ 231.00	$ 226.00	$ 200.00
110 Swing out work light	Swing out Work Light	$ 173.00	$ 170.00	$ 150.00
Hand Spot	12V Hand Held Spot	$ 148.00	$ 145.00	$ 128.00
Awning	Work Area Rear Awning	$ 1,248.00	$ 1,223.00	$ 1,080.00
VSP Storage bracket	VSP Storage Bracket Floor Mounted	$ 231.00	$ 226.00	$ 200.00
QV Storage	QV Poll Storage Brakets on Wall	$ 231.00	$ 226.00	$ 200.00
4 corner mounted LED Strobes	4 corner mounted LED Strobes	$ 578.00	$ 566.00	$ 500.00
Rear Arrow Board	Rear Roof Mounted Arrow Board	$ 1,064.00	$ 1,042.00	$ 920.00
Front Arrow Board	Front Roof mounted arrow board	$ 1,064.00	$ 1,042.00	$ 920.00
Front Roof Mounted Strobe	Front Roof Mounted Strobe	$ 151.00	$ 148.00	$ 131.00
Rear Roof Mounted Strobe	Rear Roof Mounted Strobe	$ 151.00	$ 148.00	$ 131.00
Backup Alarm	Back-up Alarm	$ 296.00	$ 290.00	$ 256.00

Backup Camera	Back-up Camera	$ 520.00	$ 510.00	$ 450.00
Insulated Ceilings and Walls	Full Insulation of the Ceilings and Walls	$ 1,186.00	$ 1,162.00	$ 1,026.00
Cabinet Light	Remote Cabinet LED with Actuators	$ 577.00	$ 565.00	$ 500.00
Tool Package	Shovel, Pick, Sledge Hammer, & Manhole Hook	$ 242.00	$ 237.00	$ 209.00
File Cabinet	2 Drawer Filing Cabinet with Butcher Block Top	$ 173.00	$ 170.00	$ 150.00
Sink	Sink with Installation and Grey Water Tank	$ 850.00	$ 833.00	$ 735.00
Roof mounted AC	Roof Mounted AC unit - includes Wiring Harness, Digital Thermostat, and Installation	$ 1,350.00	$ 1,323.00	$ 1,167.00
Additional Viewing Monitor	19" Tru-Vu Viewing Monitor (required for SAT)	$ 665.00	$ 652.00	$ 575.00
Sunlight Readable Monitor	19" Tru-Vu Sunlight Readable Monitor	$ 1,271.00	$ 1,246.00	$ 1,103.00
Computer Monitor	19" Tru-Vu Computer Monitor (required for Rack Mount)	$ 665.00	$ 652.00	$ 575.00
Keyboard Tray	Under-desk mounted Keyboard Tray (required for SAT, optional for Rack Mount)	$ 133.00	$ 130.00	$ 115.00
Multi-Monitor Mount	Multi-Monitor Mount for Office Area (required for SAT and/or Rack Mount)	$ 462.00	$ 453.00	$ 400.00
Color Printer	Color Printer	$ 292.00	$ 286.00	$ 253.00
DVD Recorder	Dual Function DVD Recorder	$ 577.00	$ 565.00	$ 499.00
Pedestal Crane	Western Mule Pedestal Crane	$ 4,232.00	$ 4,147.00	$ 3,670.00
Cable Reel Support Frame	Support Frame for SAT (optional for RVX)	$ 660.00	$ 647.00	$ 571.00
Bedslide	Bedslide	$ 2,000.00	$ 1,960.00	$ 1,735.00
Pocket Door	Bulkhead Wall Pocket Door	$ 2,499.00	$ 2,449.00	$ 2,167.00
Air Compressor	6 gallon, 150 psi Air Compressor	$ 610.00	$ 598.00	$ 529.00
Metal Detector	Metal Detector	$ 885.00	$ 867.00	$ 767.00
12V Receptacle	12 V Receptable in Rear	$ 163.00	$ 160.00	$ 142.00
4 1/2" Bench Vise	4 1/2" Bench Vise	$ 213.00	$ 209.00	$ 185.00
Magnetic Tool Holders over Workbench	Magnetic Tool Holders over Workbench	$ 139.00	$ 136.00	$ 120.00
Peg Board over Workbench	Peg Board over Workbench	$ 139.00	$ 136.00	$ 120.00
Doggie Door	Doggie Door in Rear Door	$ 634.00	$ 621.00	$ 550.00
Front Bumper Cone Storage	Front Bumper Cone Storage	$ 115.00	$ 113.00	$ 100.00
Dodge ProMaster	**Build out to customer supplied chassis - specifications attached - you must include one power option**	**$ 19,692.00**	**$ 19,298.00**	**$ 17,034.00**
Available Options				
Inverter System Package	3.0 KW Xantrax Pure Sine Wave Inverter & Control Panel	$ 3,930.00	$ 3,851.00	$ 3,400.00
Corner Mounted Spotlights	(2) Corner mounted LED Work Area Spotlights	$ 231.00	$ 226.00	$ 200.00
110 Swing out work light	Swing out Work Light	$ 173.00	$ 170.00	$ 150.00
Hand Spot	12V Hand Held Spot	$ 148.00	$ 145.00	$ 128.00
4 corner mounted LED Strobes	4 corner mounted LED Strobes	$ 578.00	$ 566.00	$ 500.00
Rear Arrow Board	Rear Roof Mounted Arrow Board	$ 1,064.00	$ 1,042.00	$ 920.00
Front Arrow Board	Front Roof mounted arrow board	$ 1,064.00	$ 1,042.00	$ 920.00
Front Roof Mounted Strobe	Front Roof Mounted Strobe	$ 151.00	$ 148.00	$ 131.00
Rear Roof Mounted Strobe	Rear Roof Mounted Strobe	$ 151.00	$ 148.00	$ 131.00
Backup Alarm	Back-up Alarm	$ 296.00	$ 290.00	$ 256.00
Backup Camera	Back-up Camera	$ 520.00	$ 510.00	$ 450.00
Insulated Ceilings and Walls	Full Insulation of the Ceilings and Walls	$ 1,186.00	$ 1,162.00	$ 1,026.00
Cabinet Light	Remote Cabinet LED with Actuators	$ 577.00	$ 565.00	$ 500.00
Tool Package	Shovel, Pick, Sledge Hammer, & Manhole Hook	$ 242.00	$ 237.00	$ 209.00
Additional Viewing Monitor	19" Tru-Vu Viewing Monitor (required for SAT)	$ 665.00	$ 652.00	$ 575.00
Sunlight Readable Monitor	19" Tru-Vu Sunlight Readable Monitor	$ 1,271.00	$ 1,246.00	$ 1,103.00
Computer Monitor	19" Tru-Vu Computer Monitor (required for Rack Mount)	$ 665.00	$ 652.00	$ 575.00
Keyboard Tray	Under-desk mounted Keyboard Tray (required for SAT, optional for Rack Mount)	$ 133.00	$ 130.00	$ 115.00
Multi-Monitor Mount	Multi-Monitor Mount for Office Area (required for SAT and/or Rack Mount)	$ 462.00	$ 453.00	$ 400.00
Color Printer	Color Printer	$ 292.00	$ 286.00	$ 253.00
DVD Recorder	Dual Function DVD Recorder	$ 577.00	$ 565.00	$ 499.00
Metal Detector	Metal Detector	$ 885.00	$ 867.00	$ 767.00
12V Receptacle	12 V Receptable in Rear	$ 163.00	$ 160.00	$ 142.00
4 1/2" Bench Vise	4 1/2" Bench Vise	$ 213.00	$ 209.00	$ 185.00
Magnetic Tool Holders over Workbench	Magnetic Tool Holders over Workbench	$ 139.00	$ 136.00	$ 120.00
Peg Board over Workbench	Peg Board over Workbench	$ 139.00	$ 136.00	$ 120.00
Carbon Monoxide Detector	Battery Operated Carbon Monoxide Detector in office	$ 122.00	$ 119.00	$ 105.00
Front Bumper Cone Storage	Front Bumper Cone Storage	$ 115.00	$ 113.00	$ 100.00
Ford Transit	**Build out to customer supplied chassis - specifications attached - you must include one power option**	**$ 16,354.00**	**$ 16,027.00**	**$ 14,146.00**
Available Options				
MEPS Power Unit Package	6.3Kw MEPS Power Unit Package	$ 12,147.00	$ 11,904.00	$ 10,507.00
Generator Power Package	5.5 Gas Powered Onan Generator - Includes Installation, Wiring Harness, Remote Start, and Dedicated Battery	$ 11,552.00	$ 11,321.00	$ 10,019.00
Wall Mounted Heater	Wall Mounted Heater	$ 260.00	$ 254.00	$ 225.00
Corner Mounted Spotlights	(2) Corner mounted LED Work Area Spotlights	$ 231.00	$ 226.00	$ 200.00
110 Swing out work light	Swing out Work Light	$ 173.00	$ 170.00	$ 150.00
Hand Spot	12V Hand Held Spot	$ 148.00	$ 145.00	$ 128.00

Awning	Work Area Rear Awning	$ 1,248.00	$ 1,223.00	$ 1,080.00
4 corner mounted LED Strobes	4 corner mounted LED Strobes	$ 578.00	$ 566.00	$ 500.00
Rear Arrow Board	Rear Roof Mounted Arrow Board	$ 1,064.00	$ 1,042.00	$ 920.00
Front Arrow Board	Front Roof mounted arrow board	$ 1,064.00	$ 1,042.00	$ 920.00
Front Roof Mounted Strobe	Front Roof Mounted Strobe	$ 151.00	$ 148.00	$ 131.00
Rear Roof Mounted Strobe	Rear Roof Mounted Strobe	$ 151.00	$ 148.00	$ 131.00
Backup Alarm	Back-up Alarm	$ 296.00	$ 290.00	$ 256.00
Backup Camera	Back-up Camera	$ 520.00	$ 510.00	$ 450.00
Insulated Ceilings and Walls	Full Insulation of the Ceilings and Walls	$ 1,186.00	$ 1,162.00	$ 1,026.00
Cabinet Light	Remote Cabinet LED with Actuators	$ 577.00	$ 565.00	$ 500.00
Tool Package	Shovel, Pick, Sledge Hammer, & Manhole Hook	$ 242.00	$ 237.00	$ 209.00
File Cabinet	2 Drawer Filing Cabinet with Butcher Block Top	$ 173.00	$ 170.00	$ 150.00
Sink	Sink with Installation and Grey Water Tank	$ 850.00	$ 833.00	$ 735.00
Roof mounted AC	Roof Mounted AC unit - includes Wiring Harness, Digital Thermostat, and Installation	$ 1,350.00	$ 1,323.00	$ 1,167.00
Additional Viewing Monitor	19" Tru-Vu Viewing Monitor (required for SAT)	$ 665.00	$ 652.00	$ 575.00
Sunlight Readable Monitor	19" Tru-Vu Sunlight Readable Monitor	$ 1,271.00	$ 1,246.00	$ 1,103.00
Computer Monitor	19" Tru-Vu Computer Monitor (required for Rack Mount)	$ 665.00	$ 652.00	$ 575.00
Keyboard Tray	Under-desk mounted Keyboard Tray (required for SAT, optional for Rack Mount)	$ 133.00	$ 130.00	$ 115.00
Multi-Monitor Mount	Multi-Monitor Mount for Office Area (required for SAT and/or Rack Mount)	$ 462.00	$ 453.00	$ 400.00
Color Printer	Color Printer	$ 292.00	$ 286.00	$ 253.00
DVD Recorder	Dual Function DVD Recorder	$ 577.00	$ 565.00	$ 499.00
Pedestal Crane	Western Mule Pedestal Crane	$ 4,232.00	$ 4,147.00	$ 3,670.00
Pocket Door	Bulkhead Wall Pocket Door	$ 2,499.00	$ 2,449.00	$ 2,167.00
Metal Detector	Metal Detector	$ 885.00	$ 867.00	$ 767.00
12V Receptacle	12 V Receptable in Rear	$ 163.00	$ 160.00	$ 142.00
4 1/2" Bench Vise	4 1/2" Bench Vise	$ 213.00	$ 209.00	$ 185.00
Magnetic Tool Holders over Workbench	Magnetic Tool Holders over Workbench	$ 139.00	$ 136.00	$ 120.00
Peg Board over Workbench	Peg Board over Workbench	$ 139.00	$ 136.00	$ 120.00
Carbon Monoxide Detector	Battery Operated Carbon Monoxide Detector in office	$ 122.00	$ 119.00	$ 105.00
Front Bumper Cone Storage	Front Bumper Cone Storage	$ 115.00	$ 113.00	$ 100.00

WINCAN Software

Part Number	WinCan Package	List Price	2% Discount
E-WIN-PRO	**WinCan Professional (includes)**	$ 7,280.00	$ 7,134.40
	- WinCan Entry		
	- WinCan OSD Control		
	- Crack Measurement		
	- WinCan Viewer		
	- PACP Module		
	- MPEG 1/2/4 Compression		
E-WIN-ULT	**WinCan Ultimate Package (Includes)**	$ 11,440.00	$ 11,211.20
	- All Modules listed in Professional Package		
	- Manhole Module		
	- Photo Assist Module		
	- Lateral Module		
	- WinCan Validator Module		
	- Report Generator Module		
E-000-0057-OFFICE	**WinCan Office Package**	$ 5,200.00	$ 5,096.00
	- WinCan Entry Module		
	- Manhole Module		
	- Crack Maeasurment		
	- Winan Viewer		
	- PACP Module		
	- Photo Assist Module		
	- Lateral Module		
	- WinCan Validator Module		
	- Report Generator Module		
E-000-0057-ProTouch	**WinCan Pro Touch Package**	$ 2,600.00	$ 2,548.00
	- Touch Screen Data Collection		
	- PACP Module		
	- Pro Touch Viewer		
	- MPEG 1/2/4 Compression		
E-000-0057-RVX	**WinCan/Rovver X Package (includes)**	$ 4,680.00	$ 4,586.40
	- WinCan Entry License		
	- Bronze Infinty Support		
	- 5 Hours of Web Training		
	Additional Modules		
E-000-0057-00	WinCan Entry	$ 3,120.00	$ 3,057.60
E-000-0057-PHAST	Photo Assist Module	$ 3,120.00	$ 3,057.60
E-000-0057-04	Lateral Module	$ 1,560.00	$ 1,528.80
E-000-0057-01	Manhole Module	$ 1,560.00	$ 1,528.80
N/A	WinCan Validation Module	$ 1,040.00	$ 1,019.20
N/A	WinCan Transfer Module	$ 2,080.00	$ 2,038.40
E-000-0057-02	Report Generator Module	$ 1,560.00	$ 1,528.80
E-000-0057-14	WinCan Project Manager Module	$ 1,560.00	$ 1,528.80
E-000-0057-03	OSD Control Module	$ 1,040.00	$ 1,019.20
E-000-0057-11	MPEG 1/2/4 Compression	$ 4,160.00	$ 4,076.80
N/A	DIVX/MPEG 1 Compression	$ 1,560.00	$ 1,528.80
E-000-0057-07	Inclination Module	$ 2,080.00	$ 2,038.40

E-000-0057-Parallel-Lase	Parrellel Laser Measurment Module	$ 2,080.00	$ 2,038.40
E-000-0057-3D	WinCan 3D Module	$ 5,200.00	$ 5,096.00
E-000-0057-15	Multiple Inspection Module	$ 1,560.00	$ 1,528.80
E-000-0057-DSExplore	WinCan Scan Explorer Module	$ 7,800.00	$ 7,644.00
E-000-0057-Ring-Laser	WinCan Laser Scan Module (For Ring and Mulit Pouint Lasers)	$ 5,200.00	$ 5,096.00
E-000-0057-08	WinCan Map Module	$ 4,160.00	$ 4,076.80
E-000-0057-GIS-Office	WinCan GIS Office	$ 7,800.00	$ 7,644.00
N/A	WinCan Pro Clean	$ 7,800.00	$ 7,644.00
E-000-0057-20	WinCan Version Upgrade	$ 4,160.00	$ 4,076.80
E-000-0057-WINHN	WinCan Hansen Integration	$ 6,760.00	$ 6,624.80
E-000-0057-18	WinCan 5 Seat Network License	$ 12,376.00	$ 12,128.48
	Hardware		
E-PA-Rackmount-01	Rack Mount Computer	$ 2,995.20	$ 2,935.30
E-PA-Laptop-01	Laptop Computer w/Docking Station	$ 1,872.00	$ 1,834.56
E-TG09	TG-09 with Encoder Wheel	$ 2,600.00	$ 2,548.00
E-000-0057-10	Vitec Video Card	$ 2,080.00	$ 2,038.40
E-000-0057-09	USB Mobile Capture Card	$ 1,040.00	$ 1,019.20
E-000-0057-Pinnacle	USB Dazzle Capture Card	$ 93.60	$ 91.73
	Support and Training		
E-WINCANTRAINING	2 Days On Site Training (Includes all travel expenses)	$ 3,463.20	$ 3,393.94
E-WinCan-Service Agreement	Bronze Infinty Plan	$ 1,560.00	$ 1,528.80

U.S.A.

TRACKLESS SERIES MT7

June 01, 2016

Suggested H-GAC U.S. Retail Price

5% Discount Applies off of the Base Price

MT7	74 hp Tractor with 16" Radials (LT245/75R)	BASE PRICE	$	121,325.00
	Air conditioning, heat, cab pressurizer, climate control,			
	8 Amber strobes w/ branch guard, Extra pump & valve,			
	Reversing engine fan, LED tail & marker lights, F-N-R joystick,			
	Intermittent front wiper, Backup camera, Battery disconnect swtich			
	Articulation lock, Remote Battery terminal, Low hyd. oil warning,			
	Ride control, cruise control, Hi/low beam headlights			

All of the above is standard on the MT7

TIRE OPTIONS FOR TRACTOR

Opt 2	Summer tires (31 x 13.5 x 15)	add to base price	$	896.00
Opt 3	Dual loader lug tires	add to base price	$	3,114.00
Opt 4	Calcium filled tires	add to base price	$	295.00
Opt 5	Calcium filled tires in tubes	add to base price	$	295.00

TRACTOR OPTIONS

Opt 6	Rear PTO	$	5,697.00
Opt 7	Rear three point hitch (crated)	$	3,587.00
Opt 9	Deep reduction transfer case (only avail if ordered with tractor)	$	8,229.00
Opt 10	Locking differentials	$	2,057.00
Opt 16	Additional high mount tail lights on rear of cab	$	369.00
Opt 25	Rear slider window	$	1,161.00
Opt 27	Rear wiper and washer	$	501.00
Opt 33	Rear dump body with front counterweights	$	7,385.00
	(requires Opt 16 AND Opt 4 OR Opt 5)		
Opt 36	Slow moving vehicle sign	$	79.00
Opt 39	Rear license plate bracket and light	$	237.00
Opt 44	tow behind sander pkg includes hitch, electric brake control, trailer connector	$	1,794.00
	Break-in filter kit	$	426.00

TIRES & RIMS PURCHASED SEPARATELY FROM TRACTOR

	Radial tire (LT245/75R)	$	302.00
	16" rim for radial tire	$	141.00
	Loader lug tire 10.00 x 16.5 6-ply	$	232.00
	16.5" rim for loader lug	$	141.00
	Summer tire 31 x 13.5 x 15	$	377.00
	15" rim for summer tire	$	220.00
	Dual loader lug tires & rims (8 tires with rims and hardware)	$	4,959.00

TRACKLESS SERIES MT7

Suggested H-GAC U.S. Retail Price
5% Discount Applies off of the Base Price

WINTER ATTACHMENTS

51" snowblower with sidewalk chute		$	9,917.00
51" ribbon snow blower w/ sidewalk chute		$	15,298.00
60" snowblower with sidewalk chute		$	10,075.00
60" ribbon snowblower w/ sidewalk chute		$	16,353.00
75" ribbon snowblower w/telescopic chute		$	24,265.00
70" snowblower with sidewalk chute		$	10,286.00
80" snowblower with sidewalk chute		$	11,974.00
Truck chute in lieu of sidewalk chute	add	$	675.00
Truck loading chute complete		$	1,583.00
Telescopic Truck loading chute complete (MT6 only)		$	4,326.00
5 ft angle plow	less attaching kit	$	2,268.00
5 ft double trip plow	less attaching kit	$	3,350.00
6 ft angle plow	less attaching kit	$	2,427.00
7 ft angle plow	less attaching kit	$	3,165.00
8 ft angle plow	less attaching kit	$	3,429.00
Angle plow attaching kit		$	2,954.00
Front sander/plow	complete	$	10,128.00
Sidewalk V plow	complete	$	4,537.00
5 position folding plow	complete	$	6,541.00
Rear salt & sand spreader with single agitator		$	6,805.00
Rear salt & sand spreader with triple agitator		$	8,018.00
Tow behind sander with brakes 1-1/4 yd capacity (requires Opt 44 & Opt 12)		$	15,614.00
Rear brine spray tank with pump and spray bar		$	4,194.00

MOWING ATTACHMENTS

74" front flail mower (requires Opt 43 reversing fan)	$	10,234.00
Boom flail (requires dual loader lug tires) (requires Opt 43 reversing fan)	$	30,384.00
72" rotary finishing mower (requires Opt 43 reversing fan)	$	6,647.00
120" rotary finishing mower (requires Opt 12 pump & valve kit) (requires Opt 43 reversing fan)	$	17,197.00
168" rotary finishing mower (requires Opt 12 pump & valve kit) (requires Opt 43 reversing fan)	$	19,834.00
168" Progressive mower (requires Opt 12 & 43)	$	23,738.00

ASPHALT ATTACHMENTS

Cold planer w/ standard drum	$	24,712.00
Cold planer w/ Ranjo drum	$	30,215.00

(both cold planers require: Opt 9 deep reduction & Opt 12 pump & valve kit)

TRACKLESS SERIES MT7

Suggested H-GAC U.S. Retail Price
5% Discount Applies off of the Base Price

SWEEPERS AND SPRAY SYSTEMS

60" x 32" dia angle sweeper	$	7,491.00
72" x 32" dia angle sweeper	$	7,913.00
84" x 32" dia angle sweeper	$	8,335.00
96" x 32" dia angle sweeper	$	10,297.00
(all sweepers require Opt 12 pump and valve kit if a sancer is to be run at the same time as the sweeper (84" and 96" sweepers require Opt 12 pump and valve regardless)		
48" pickup sweeper	$	8,387.00
Water tank and pump kit for all sweepers	$	3,877.00
Spray bar kit for angle sweeper	$	243.00
Spray bar kit for pickup sweeper	$	159.00
14 ft rear mounted spray boom	$	1,266.00

AERATOR, FRONT END LOADER

Aerator	$	11,922.00
Front end loader with 49" wide bucket	$	10,867.00
Front end loader with 77" wide bucket	$	10,867.00
Stump Grinder	$	13,610.00

2016 Pricing

Trailer Mounted Vacuum Debris Collectors

Page Index

All prices are F.O.B. Richmond, VA
Picture may show some optional features

Tow Behind Trailer Mounted Models:

Model LCT65 – page 3

Model XV600 – page 4

Model XV6000 – page 5

Model XV500 – page 6

Self-Contained Trailer Mounted Models:

Model XV8027 (10 cubic yard) – page 7

Model XV8031D (10 cubic yard) – page 8

Model SCL65TM14 (14 cubic yard) – page 9

Model SCL65TM20 (20 cubic yard) – page 10

Model SCL65TM25 (25 cubic yard) – page 11

Model SCL65TM30 (30 cubic yard) – page 12

TOW BEHIND TRAILER MOUNTED MODELS

MODEL	DESCRIPTION	MSRP
LCT65	28" diameter suction impeller with six 3/8" thick T-1 steel blades	

All prices are F.O.B. Richmond, VA

Picture may show some optional features

3-groove power band belt drive for suction impeller
16" diameter x 120" urethane suction hose with steel nozzle
14" diameter x 60" long rubber exhaust hose
Hydraulic hose boom powered by an electric/hydraulic pump
13" clutch assembly with a 2.25" diameter PTO shaft
30-gallon polyethylene fuel tank
Electronic engine controls with engine safety shut down system
1/4" thick trailer deck with channel members on the ends
Single 4,500 pound rubber Torflex axle with EZ lube hubs
ST225-75-R15 radial tires mounted on steel wheels and steel fenders
Electric brakes with break-away actuator
LED type DOT lights and aoval LED amber flasher light at rear
HD height adjustable pintle eye with three quick release pins
Parking jack with 5" swivel castor wheel
All components pre-painted prior to assembly - White Color

Kubota WSG3800 3.8L 4 cylinder gasoline engine rated for 87 HP @ 2600 rpm	**$ 27,500.00**
John Deere Power Tech EWX 2.9L 3 cylinder diesel rated for 74 HP Final Tier 4	**$ 32,000.00**
Alternate engine option	**P.O.R.**

TOW BEHIND TRAILER MOUNTED MODELS

MODEL	DESCRIPTION	MSRP
XV600	32" diameter suction impeller with six 3/8" thick T-1 steel blades	
	4-groove power band belt drive for suction impeller	
	16" diameter x 120" urethane suction hose with steel nozzle	
	16" diameter x 48" long rubber exhaust hose	
	Hydraulic hose boom powered by an electric/hydraulic pump	
	13" clutch assembly with a 2.25" diameter PTO shaft	
	44-gallon polyethylene fuel tank	
	Engine controls with Murphy safety shut down system	
	1/4" thick trailer deck with channel members on the ends	
	Single 6,000 pound rubber Torflex axle with EZ lube hubs	
	ST225-75-R15 radial tires mounted on steel wheels and steel fenders	
	Electric brakes with break-away actuator	
	LED type DOT lights and aoval LED amber flasher light at rear	
	HD height adjustable pintle eye with three quick release pins	
	Parking jack with 5" swivel castor wheel	
	All components pre-painted prior to assembly - standard color is white	
	Kubota WSG3800 3.8L 4 cylinder gasoline engine rated for 87 HP @ 2600 rpm	**$ 28,750.00**
	Powered by John Deere 4045HFC03 diesel 4 cyl. engine rated for 74 HP Final Tier 4 **	**$ 34,500.00**
	Powered by John Deere PWL 4045HFC04 4 cyl diesel rated for 85 HP Final Tier 4	**$ 42,500.00**
	Powered by John Deere 4045TF290 diesel 4 cyl. engine rated for 74 HP Interim Tier 4 *	**$ 28,000.00**
	Powered by John Deere 4045TF280 diesel 4 cylinder engine rated for 84 HP Tier 3 *	**$ 29,300.00**
Options		
	Alternate engine option	**P.O.R.**
	2 axis (up/down & left/right) hose boom with central hydraulics	**$ 5,400.00**
	3 axis (up/down & left/right & in/out) hose boom with central hydraulics	**$ 7,300.00**
	Hydraulic front parking jack in lieu of manual jack	**$ 1,500.00**
	Remote electric throttle for engine (Tier 3 & IT4 engines only)	**$ 800.00**
	Fluid Drive coupler in lieu of standard clutch	**$ 3,700.00**
	PTO Safety engagement system	**$ 400.00**
	Curb nozle attachment in lieu of suction hose	**$ 2,400.00**
	Hydraulic agitator for curb nozzle	**$ 2,800.00**
	Driver's (street) side pickup	**$ 1,700.00**
	HD Rubber suction hose in lieu of urethane	**$ 700.00**
	Special paint color other than standard white	**$ 600.00**
	Boxed perforated pleated radiator screen in lieu of standard	**$ 700.00**

* Subject to availability

** 30" diameter suction impeller

All prices are F.O.B. Richmond, VA
Picture may show some optional features

TOW BEHIND TRAILER MOUNTED MODELS

MODEL	DESCRIPTION	MSRP
XV6000	38" diameter suction impeller with six 3/8" thick T-1 steel blades	
	5-groove power band belt drive for suction impeller	
	16" diameter x 120" rubber suction hose with steel nozzle	
	16" diameter x 48" long rubber exhaust hose	
	Hydraulic hose boom powered by an electric/hydraulic pump	
	13" clutch assembly with a 2.25" diameter PTO shaft	
	44-gallon polyethylene fuel tank	
	Engine controls with Murphy safety shut down system	
	1/4" thick trailer deck with channel members on the ends	
	Single 7,000 pound rubber Torflex axle with EZ lube hubs	
	ST235-85-R16 radial tires mounted on steel wheels and steel fenders	
	Electric brakes with break-away actuator	
	LED type DOT lights and aoval LED amber flasher light at rear	
	HD height adjustable pintle eye with three quick release pins	
	Parking jack with 5" swivel castor wheel	
	All components pre-painted prior to assembly - standard color is white	
	Powered by John Deere PWL 4045HFC04 4 cyl diesel rated for 99 HP Final Tier 4	**$ 53,400.00**
	Powered by John Deere 4045TF285 diesel 4 cy. engine rated for 99 HP Tier 3 *	**$ 33,300.00**
Options		
	Alternate engine option	**P.O.R.**
	2 axis (up/down & left/right) hose boom with central hydraulics	**$ 5,400.00**
	3 axis (up/down & left/right & in/out) hose boom with central hydraulics	**$ 7,300.00**
	Hydraulic front parking jack in lieu of manual jack	**$ 1,500.00**
	Fluid Drive coupler in lieu of standard clutch	**$ 3,700.00**
	PTO Safety engagement system	**$ 400.00**
	Curb nozle attachment in lieu of suction hose	**$ 2,400.00**
	Hydraulic agitator for curb nozzle	**$ 2,800.00**
	Driver's (street) side pickup	**$ 1,700.00**
	Special paint color other than standard white	**$ 600.00**
	Boxed perforated pleated radiator screen in lieu of standard	**$ 700.00**

* Subject to availability

All prices are F.O.B. Richmond, VA
Picture may show some optional features

MODEL	DESCRIPTION		
	XTREME VAC COLLECTOR BOXES		
	72" high x 78" wide (81" wide outside dimension)		
	Construction consists of 3/16" x 1-1/2" angle frame fitted with 12-ga. steel panels		
	Top of box is fitted with expanded metal		
	Single rear door is hinged from the top with four cleave type hinges with 3/4" pins		
	Rear door is equipped with flexible rubber leaf box connector and tube support		
	Rear over-center latch mechanism secures the rear door		
	The rear door has a crossbar to keep it securely closed		
	Four lifting eyes are provided as well as a total of eight mounting loops		
	Interior of box is equipped with a rubber deflector		
	Delivered fully assembled ready for operation		
	Painted: Standard white color		
			MSRP
XV500-8	8' long box 72" H x 78" W	**$**	**4,700.00**
XV500-9	9' long box 72" H x 78" W	**$**	**4,900.00**
XV500-10	10' long box 72" H x 78" W	**$**	**5,100.00**
XV500-11	11' long box 72" H x 78" W	**$**	**5,300.00**
XV500-12	12' long box 72" H x 78" W	**$**	**5,500.00**
XV500-13	13' long box 72" H x 78" W	**$**	**5,700.00**
XV500-14	14' long box 72" H x 78" W	**$**	**5,900.00**
	Special paint color other than standard white	**$**	**600.00**

All prices are F.O.B. Richmond, VA
Picture may show some optional features

SELF-CONTAINED TRAILER MOUNTED MODELS

MODEL	DESCRIPTION	MSRP
XV8027	Hopper - 10 cubic yards with self dumping underbody hoist	**$ 22,400.00**
	20" diameter suction impeller with six 3/8" thick T-1 steel blades	
	3-groove belt drive for suction impeller	
	12" diameter x 120" urethane suction hose with steel nozzle	
	Manual swing hose boom assembly	
	Kawasaki FD750D liquid-cooled, 4 stroke OHV V-twin cylinder gasoline engine; 27 HP	
	Manual slide to engage and disengage the vacuum system	
	12-gallon polyethylene fuel tank	
	Engine controls; tachometer, hour meter, oil light, water temp. light & chargine light	
	Underbody type hoist that dumps to 52 degrees and is power up/down	
	Electric/hydraulic pump powers the 24,000 pound capacity hoist	
	Tandem rubber Torflex axles with a combined rating of 12,000 pounds	
	Four ST225-75-R15 radial tires mounted on white spoke wheels	
	Electric brakes with break-away actuator	
	LED type DOT lights	
	HD height adjustable pintle eye with three quick release pins	
	Manual 2000# parking jack with drop foot	
	All components pre-painted prior to assembly - White Color	
Options		
	Hydraulic boom in lieu of manual boom	**$ 1,400.00**
	Hook lift version with sub-frame (DEDUCT)	**$ (1,000.00)**

All prices are F.O.B. Richmond, VA
Picture may show some optional features

SELF-CONTAINED TRAILER MOUNTED MODELS

MODEL	DESCRIPTION	MSRP
XV8031D	Hopper - 10 cubic yards with self dumping underbody hoist	**$ 26,600.00**
	20" diameter suction impeller with six 3/8" thick T-1 steel blades	
	3-groove belt drive for suction impeller	
	12" diameter x 120" urethane suction hose with steel nozzle	
	Manual swing hose boom assembly	
	Kubota liquid-cooled, 3 cylinder diesel engine; 24 HP Final Tier 4	
	Manual slide to engage and disengage the vacuum system	
	12-gallon polyethylene fuel tank	
	Engine controls; tachometer, hour meter, oil light, water temp. light & chargine light	
	Underbody type hoist that dumps to 52 degrees and is power up/down	
	Electric/hydraulic pump powers the 24,000 pound capacity hoist	
	Tandem rubber Torflex axles with a combined rating of 12,000 pounds	
	Four ST225-75-R15 radial tires mounted on white spoke wheels	
	Electric brakes with break-away actuator	
	LED type DOT lights	
	HD height adjustable pintle eye with three quick release pins	
	Manual 2000# parking jack with drop foot	
	All components pre-painted prior to assembly - White Color	
Options		
	Hydraulic boom in lieu of manual boom	**$ 1,400.00**
	Hook lift version with sub-frame (DEDUCT)	**$ (1,000.00)**

All prices are F.O.B. Richmond, VA
Picture may show some optional features

SELF-CONTAINED TRAILER MOUNTED MODELS

MODEL	DESCRIPTION	MSRP
SCL65TM14	Hopper - 14 cubic yards with self dumping underbody hoist	
	28" diameter suction impeller with six 3/8" thick T-1 steel blades	
	3-groove power band belt drive for suction impeller	
	16" diameter x 120" urethane suction hose with steel nozzle	
	Hydraulic hose boom powered by an electric/hydraulic pump	
	13" clutch assembly with a 2.25" diameter PTO shaft	
	30-gallon polyethylene fuel tank	
	Electronic engine controls with engine safety shut down system	
	Underbody type hoist that dumps to 52 degrees and is power up/down	
	Gear driven hydraulic pump powers the 15.2 ton capacity hoist	
	Tandem rubber Torflex axles with a combined rating of 16,000 pounds	
	Four ST235-85-R16 radial tires mounted on steel wheels	
	Electric brakes with break-away actuator	
	LED type DOT lights and two rear amber LED oval flashers	
	HD height adjustable pintle eye with three quick release pins	
	Manual parking jack with drop foot	
	All components pre-painted prior to assembly - hopper standard white color	
	Engine compartment & vacuum blower housing painted battleship grey	
	Kubota WSG3800 3.8L 4 cylinder gasoline engine rated for 87 HP @ 2600 rpm	**$ 45,200.00**
	John Deere Power Tech EWX 2.9L 3 cylinder diesel rated for 74 HP Final Tier 4	**$ 49,700.00**
Options		
	Special hopper paint in lieu of standard white	**$ 900.00**
	Air Scoop to redirect exhausted air towards rear of unit	**$ 2,400.00**
	BE (bottom exhaust) for 14 cubic yard units	**$ 6,500.00**
	Hydraulic front parking jack in lieu of manual jack	**$ 1,500.00**
	HD Rubber suction hose in lieu of urethane	**$ 700.00**
	HD Suction impeller with 1/2" thick blades	**$ 1,300.00**
	Single top hinged rear door in lieu of dual doors	**$ -**
	PTO Safety engagement system	**$ 400.00**
	Fluid Drive coupler in lieu of standard clutch	**$ 3,700.00**
	11 gauge perforated top screens with 3/16" holes in lieu of standard	**$ 1,600.00**
	Boxed perforated pleated radiator screen in lieu of standard	**$ 700.00**
	Driver's (street) side pickup	**$ 1,700.00**
	Alternate engine option	**P.O.R.**

All prices are F.O.B. Richmond, VA
Picture may show some optional features

SELF-CONTAINED TRAILER MOUNTED MODELS

MODEL	DESCRIPTION	MSRP
SCL65TM20	Hopper - 20 cubic yards with self dumping underbody hoist	
	28" diameter suction impeller with six 3/8" thick T-1 steel blades	
	3-groove power band belt drive for suction impeller	
	16" diameter x 120" urethane suction hose with steel nozzle	
	Hydraulic hose boom powered by an electric/hydraulic pump	
	13" clutch assembly with a 2.25" diameter PTO shaft	
	30-gallon polyethylene fuel tank	
	Electronic engine controls with engine safety shut down system	
	Underbody type hoist that dumps to 52 degrees and is power up/down	
	Gear driven hydraulic pump powers the 21.5 ton capacity hoist	
	Tandem axles with a combined rating of 20,000 pounds	
	Eight 235/80R16E tires mounted on steel wheels	
	Electric brakes with break-away actuator	
	LED type DOT lights and two rear amber LED oval flashers	
	HD height adjustable pintle eye with three quick release pins	
	Manual parking jack with drop foot	
	All components pre-painted prior to assembly - hopper standard white color	
	Engine compartment & vacuum blower housing painted battleship grey	
	Kubota WSG3800 3.8L 4 cylinder gasoline engine rated for 87 HP @ 2600 rpm	**$ 47,900.00**
	John Deere Power Tech EWX 2.9L 3 cylinder diesel rated for 74 HP Final Tier 4	**$ 52,400.00**
Options		
	Special hopper paint in lieu of standard white	**$ 900.00**
	Air Scoop to redirect exhausted air towards rear of unit	**$ 2,400.00**
	BE (bottom exhaust) for 20 cubic yard units	**$ 6,500.00**
	Hydraulic front parking jack in lieu of manual jack	**$ 1,500.00**
	HD Rubber suction hose in lieu of urethane	**$ 700.00**
	HD Suction impeller with 1/2" thick blades	**$ 1,300.00**
	Single top hinged rear door in lieu of dual doors	**$ -**
	PTO Safety engagement system	**$ 400.00**
	Fluid Drive coupler in lieu of standard clutch	**$ 3,700.00**
	11 gauge perforated top screens with 3/16" holes in lieu of standard	**$ 1,600.00**
	Boxed perforated pleated radiator screen in lieu of standard	**$ 700.00**
	Driver's (street) side pickup	**$ 1,700.00**
	Alternate engine option	**P.O.R.**

All prices are F.O.B. Richmond, VA
Picture may show some optional features

SELF-CONTAINED TRAILER MOUNTED MODELS

MODEL	DESCRIPTION	MSRP
SCL65TM25	Hopper - 25 cubic yards with self dumping underbody hoist	
	28" diameter suction impeller with six 3/8" thick T-1 steel blades	
	3-groove power band belt drive for suction impeller	
	16" diameter x 120" urethane suction hose with steel nozzle	
	Hydraulic hose boom powered by an electric/hydraulic pump	
	13" clutch assembly with a 2.25" diameter PTO shaft	
	30-gallon polyethylene fuel tank	
	Electronic engine controls with engine safety shut down system	
	Underbody type hoist that dumps to 52 degrees and is power up/down	
	Gear driven hydraulic pump powers the 26.6 ton capacity hoist	
	Tandem axles with a combined rating of 24,000 pounds	
	Eight 235/80R16E tires mounted on steel wheels	
	Electric brakes with break-away actuator	
	LED type DOT lights and two rear amber LED oval flashers	
	HD height adjustable pintle eye with three quick release pins	
	Manual parking jack with drop foot	
	All components pre-painted prior to assembly - hopper standard white color	
	Engine compartment & vacuum blower housing painted battleship grey	
	Kubota WSG3800 3.8L 4 cylinder gasoline engine rated for 87 HP @ 2600 rpm	**$ 51,300.00**
	John Deere Power Tech EWX 2.9L 3 cylinder diesel rated for 74 HP Final Tier 4	**$ 55,800.00**
Options		
	Special hopper paint in lieu of standard white	**$ 900.00**
	Air Scoop to redirect exhausted air towards rear of unit	**$ 2,400.00**
	BE (bottom exhaust) for 25 cubic yard units	**$ 7,500.00**
	Hydraulic front parking jack in lieu of manual jack	**$ 1,500.00**
	HD Rubber suction hose in lieu of urethane	**$ 700.00**
	HD Suction impeller with 1/2" thick blades	**$ 1,300.00**
	Single top hinged rear door in lieu of dual doors	**$ -**
	PTO Safety engagement system	**$ 400.00**
	Fluid Drive coupler in lieu of standard clutch	**$ 3,700.00**
	11 gauge perforated top screens with 3/16" holes in lieu of standard	**$ 2,400.00**
	Boxed perforated pleated radiator screen in lieu of standard	**$ 700.00**
	Driver's (street) side pickup	**$ 1,700.00**
	Alternate engine option	**P.O.R.**

All prices are F.O.B. Richmond, VA
Picture may show some optional features

SELF-CONTAINED TRAILER MOUNTED MODELS

MODEL	DESCRIPTION	MSRP
SCL65TM30	Hopper - 30 cubic yards with self dumping underbody hoist	
	28" diameter suction impeller with six 3/8" thick T-1 steel blades	
	3-groove power band belt drive for suction impeller	
	16" diameter x 120" urethane suction hose with steel nozzle	
	Hydraulic hose boom powered by an electric/hydraulic pump	
	13" clutch assembly with a 2.25" diameter PTO shaft	
	30-gallon polyethylene fuel tank	
	Electronic engine controls with engine safety shut down system	
	Underbody type hoist that dumps to 52 degrees and is power up/down	
	Gear driven hydraulic pump powers the 26.6 ton capacity hoist	
	Tandem axles with a combined rating of 24,000 pounds	
	Eight 235/80R16E tires mounted on steel wheels	
	Electric brakes with break-away actuator	
	LED type DOT lights and two rear amber LED oval flashers	
	HD height adjustable pintle eye with three quick release pins	
	Manual parking jack with drop foot	
	All components pre-painted prior to assembly - hopper standard white color	
	Engine compartment & vacuum blower housing painted battleship grey	
	Kubota WSG3800 3.8L 4 cylinder gasoline engine rated for 87 HP @ 2600 rpm	**$ 52,500.00**
	John Deere Power Tech EWX 2.9L 3 cylinder diesel rated for 74 HP Final Tier 4	**$ 57,000.00**
Options		
	Special hopper paint in lieu of standard white	**$ 900.00**
	Air Scoop to redirect exhausted air towards rear of unit	**$ 2,400.00**
	BE (bottom exhaust) for 30 cubic yard units	**$ 7,500.00**
	Hydraulic front parking jack in lieu of manual jack	**$ 1,500.00**
	HD Rubber suction hose in lieu of urethane	**$ 700.00**
	HD Suction impeller with 1/2" thick blades	**$ 1,300.00**
	PTO Safety engagement system	**$ 400.00**
	Fluid Drive coupler in lieu of standard clutch	**$ 3,700.00**
	11 gauge perforated top screens with 3/16" holes in lieu of standard	**$ 2,400.00**
	Boxed perforated pleated radiator screen in lieu of standard	**$ 700.00**
	Driver's (street) side pickup	**$ 1,700.00**
	Alternate engine option	**P.O.R.**

All prices are F.O.B. Richmond, VA
Picture may show some optional features

2016 Pricing

Truck Mounted Vacuum Debris Collectors

All prices are F.O.B. Richmond, VA
Picture may show some optional features

Page Index

Truck Mounted Models:

Model SCL65SM14 (14 cubic yard) – page 3

Model SCL65SM20 (20 cubic yard) – page 4

Model SCL65SM25 (25 cubic yard) – page 5

Model SCL65SM30 (30 cubic yard) – page 6

SELF-CONTAINED TRUCK MOUNTED MODELS

MODEL	DESCRIPTION	MSRP
SCL65SM14	Hopper - 14 cubic yards with self dumping underbody hoist	
	28" diameter suction impeller with six 3/8" thick T-1 steel blades	
	3-groove power band belt drive for suction impeller	
	16" diameter x 120" urethane suction hose with steel nozzle	
	Hydraulic hose boom powered by an electric/hydraulic pump	
	Powered by John Deere Power Tech EWX 2.9L 3 cyl diesel rated for 74 HP Final Tier 4	
	13" clutch assembly with a 2.25" diameter PTO shaft	
	30-gallon polyethylene fuel tank	
	Electronic engine controls with engine safety shut down system	
	Underbody type hoist that dumps to 52 degrees and is power up/down	
	LED type DOT lights and 2 oval LED amber flasher lights at rear	
	All components pre-painted prior to assembly - hopper standard white color	
	Engine compartment & vacuum blower housing painted battleship grey	
	Poly fenders mounted on rear wheels	
	Mounted on approved new chassis	
	Kubota WSG3800 3.8L 4 cylinder gasoline engine rated for 87 HP @ 2600 rpm	**$ 45,200.00**
	John Deere Power Tech EWX 2.9L 3 cylinder diesel rated for 74 HP Final Tier 4	**$ 49,700.00**
Options		
	Special hopper paint in lieu of standard white	**$ 900.00**
	Mounting on used chassis	**$ 1,200.00**
	Hook lift version with sub-frame (DEDUCT)	**$ (1,000.00)**
	BE (bottom exhaust) for 14 cubic yard units	**$ 6,500.00**
	Air Scoop to redirect exhausted air towards rear of unit	**$ 2,400.00**
	Light bar on hopper nose cone with 4 front facing amber flashing LED lights	**$ 900.00**
	Hydraulic rear door latches for single top hinged door	**$ 3,540.00**
	F/S CAMSET56-NTSC-2 rear color camera with 5.6" screen with audio - installed	**$ 1,400.00**
	Chipper door and trailer hitch with wiring (no brake controller)	**$ 2,500.00**
	Fluid Drive coupler in lieu of standard clutch	**$ 3,700.00**
	3-Axis (3X) automated hose boom (in/out, up/dwn & left/right) with cab controls	**$ 12,800.00**
	HD Rubber suction hose in lieu of urethane (N/A with 3-Axis boom)	**$ 700.00**
	HD Suction impeller with 1/2" thick blades	**$ 1,300.00**
	PTO Safety engagement system	**$ 400.00**
	Remote electric throttle (Standard with 3-Axis option)	**$ 800.00**
	Remote electric clutch engagement (Standard with 3-Axis option)	**$ 1,100.00**
	11 gauge perforated top screens with 3/16" holes in lieu of standard	**$ 1,600.00**
	Boxed perforated pleated radiator screen in lieu of standard	**$ 700.00**
	Driver's (street) side pickup (Not available with 3-Axis option)	**$ 1,700.00**
	2017 or newer Freightliner 33,000 GVW chassis with dual steering	**$ 99,995.00**

All prices are F.O.B. Richmond, VA
Picture may show some optional features

SELF-CONTAINED TRUCK MOUNTED MODELS

MODEL	DESCRIPTION	MSRP
SCL65SM20	Hopper - 20 cubic yards with self dumping underbody hoist	
	28" diameter suction impeller with six 3/8" thick T-1 steel blades	
	3-groove power band belt drive for suction impeller	
	16" diameter x 120" urethane suction hose with steel nozzle	
	Hydraulic hose boom powered by an electric/hydraulic pump	
	Powered by John Deere Power Tech EWX 2.9L 3 cyl diesel rated for 74 HP Final Tier 4	
	13" clutch assembly with a 2.25" diameter PTO shaft	
	30-gallon polyethylene fuel tank	
	Electronic engine controls with engine safety shut down system	
	Underbody type hoist that dumps to 52 degrees and is power up/down	
	LED type DOT lights and 2 oval LED amber flasher lights at rear	
	All components pre-painted prior to assembly - hopper standard white color	
	Engine compartment & vacuum blower housing painted battleship grey	
	Poly fenders mounted on rear wheels	
	Mounted on approved new chassis	
	Kubota WSG3800 3.8L 4 cylinder gasoline engine rated for 87 HP @ 2600 rpm	**$ 47,900.00**
	John Deere Power Tech EWX 2.9L 3 cylinder diesel rated for 74 HP Final Tier 4	**$ 52,400.00**
Options		
	Special hopper paint in lieu of standard white	**$ 900.00**
	Mounting on used chassis	**$ 1,200.00**
	Hook lift version with sub-frame (DEDUCT)	**$ (1,000.00)**
	BE (bottom exhaust) for 20 cubic yard units	**$ 6,500.00**
	Air Scoop to redirect exhausted air towards rear of unit	**$ 2,400.00**
	Light bar on hopper nose cone with 4 front facing amber flashing LED lights	**$ 900.00**
	Hydraulic rear door latches for single top hinged door	**$ 3,540.00**
	F/S CAMSET56-NTSC-2 rear color camera with 5.6" screen with audio - installed	**$ 1,400.00**
	Chipper door and trailer hitch with wiring (no brake controller)	**$ 2,500.00**
	Fluid Drive coupler in lieu of standard clutch	**$ 3,700.00**
	3-Axis (3X) automated hose boom (in/out, up/dwn & left/right) with cab controls	**$ 12,800.00**
	HD Rubber suction hose in lieu of urethane (N/A with 3-Axis boom)	**$ 700.00**
	HD Suction impeller with 1/2" thick blades	**$ 1,300.00**
	PTO Safety engagement system	**$ 400.00**
	Remote electric throttle (Standard with 3-Axis option)	**$ 800.00**
	Remote electric clutch engagement (Standard with 3-Axis option)	**$ 1,100.00**
	11 gauge perforated top screens with 3/16" holes in lieu of standard	**$ 1,600.00**
	Boxed perforated pleated radiator screen in lieu of standard	**$ 700.00**
	Driver's (street) side pickup (Not available with 3-Axis option)	**$ 1,700.00**
	2017 or newer Freightliner 33,000 GVW chassis with dual steering	**$ 99,995.00**

All prices are F.O.B. Richmond, VA
Picture may show some optional features

SELF-CONTAINED TRUCK MOUNTED MODELS

MODEL	DESCRIPTION	MSRP
SCL65SM25	Hopper - 25 cubic yards with self dumping underbody hoist	
	28" diameter suction impeller with six 3/8" thick T-1 steel blades	
	3-groove power band belt drive for suction impeller	
	16" diameter x 120" urethane suction hose with steel nozzle	
	Hydraulic hose boom powered by an electric/hydraulic pump	
	13" clutch assembly with a 2.25" diameter PTO shaft	
	30-gallon polyethylene fuel tank	
	Electronic engine controls with engine safety shut down system	
	Underbody type hoist that dumps to 52 degrees and is power up/down	
	LED type DOT lights and 2 oval LED amber flasher lights at rear	
	All components pre-painted prior to assembly - hopper standard white color	
	Engine compartment & vacuum blower housing painted battleship grey	
	Poly fenders mounted on rear wheels	
	Mounted on approved new chassis	
	Kubota WSG3800 3.8L 4 cylinder gasoline engine rated for 87 HP @ 2600 rpm	**$ 51,300.00**
	John Deere Power Tech EWX 2.9L 3 cylinder diesel rated for 74 HP Final Tier 4	**$ 55,800.00**
Options		
	Special hopper paint in lieu of standard white	**$ 900.00**
	Mounting on used chassis	**$ 1,200.00**
	Hook lift version with sub-frame (DEDUCT)	**$ (1,000.00)**
	BE (bottom exhaust) for 25 cubic yard units	**$ 7,500.00**
	Air Scoop to redirect exhausted air towards rear of unit	**$ 2,400.00**
	Light bar on hopper nose cone with 4 front facing amber flashing LED lights	**$ 900.00**
	Hydraulic rear door latches for single top hinged door	**$ 3,540.00**
	F/S CAMSET56-NTSC-2 rear color camera with 5.6" screen with audio - installed	**$ 1,400.00**
	Chipper door and trailer hitch with wiring (no brake controller)	**$ 2,500.00**
	Fluid Drive coupler in lieu of standard clutch	**$ 3,700.00**
	3-Axis (3X) automated hose boom (in/out, up/dwn & left/right) with cab controls	**$ 12,800.00**
	HD Rubber suction hose in lieu of urethane (N/A with 3-Axis boom)	**$ 700.00**
	HD Suction impeller with 1/2" thick blades	**$ 1,300.00**
	PTO Safety engagement system	**$ 400.00**
	Remote electric throttle (Standard with 3-Axis option)	**$ 800.00**
	Remote electric clutch engagement (Standard with 3-Axis option)	**$ 1,100.00**
	11 gauge perforated top screens with 3/16" holes in lieu of standard	**$ 2,400.00**
	Boxed perforated pleated radiator screen in lieu of standard	**$ 700.00**
	Driver's (street) side pickup (Not available with 3-Axis option)	**$ 1,700.00**
	2017 or newer Freightliner 33,000 GVW chassis with dual steering	**$ 99,995.00**

All prices are F.O.B. Richmond, VA
Picture may show some optional features

SELF-CONTAINED TRUCK MOUNTED MODELS

MODEL	DESCRIPTION	MSRP
SCL65SM30	Hopper - 30 cubic yards with self dumping underbody hoist	
	28" diameter suction impeller with six 3/8" thick T-1 steel blades	
	3-groove power band belt drive for suction impeller	
	16" diameter x 120" urethane suction hose with steel nozzle	
	Hydraulic hose boom powered by an electric/hydraulic pump	
	13" clutch assembly with a 2.25" diameter PTO shaft	
	30-gallon polyethylene fuel tank	
	Electronic engine controls with engine safety shut down system	
	Underbody type hoist that dumps to 52 degrees and is power up/down	
	LED type DOT lights and 2 oval LED amber flasher lights at rear	
	All components pre-painted prior to assembly - hopper standard white color	
	Engine compartment & vacuum blower housing painted battleship grey	
	Poly fenders mounted on rear wheels	
	Mounted on approved new chassis	
	Kubota WSG3800 3.8L 4 cylinder gasoline engine rated for 87 HP @ 2600 rpm	**$ 52,500.00**
	John Deere Power Tech EWX 2.9L 3 cylinder diesel rated for 74 HP Final Tier 4	**$ 57,000.00**
Options		
	Special hopper paint in lieu of standard white	**$ 900.00**
	Mounting on used chassis	**$ 1,200.00**
	Hook lift version with sub-frame (DEDUCT)	**$ (1,000.00)**
	BE (bottom exhaust) for 30 cubic yard units	**$ 7,500.00**
	Air Scoop to redirect exhausted air towards rear of unit	**$ 2,400.00**
	Light bar on hopper nose cone with 4 front facing amber flashing LED lights	**$ 900.00**
	Hydraulic rear door latches for single top hinged door	**$ 3,540.00**
	F/S CAMSET56-NTSC-2 rear color camera with 5.6" screen with audio - installed	**$ 1,400.00**
	Chipper door and trailer hitch with wiring (no brake controller)	**$ 2,500.00**
	Fluid Drive coupler in lieu of standard clutch	**$ 3,700.00**
	3-Axis (3X) automated hose boom (in/out, up/dwn & left/right) with cab controls	**$ 12,800.00**
	HD Rubber suction hose in lieu of urethane (N/A with 3-Axis boom)	**$ 700.00**
	HD Suction impeller with 1/2" thick blades	**$ 1,300.00**
	PTO Safety engagement system	**$ 400.00**
	Remote electric throttle (Standard with 3-Axis option)	**$ 800.00**
	Remote electric clutch engagement (Standard with 3-Axis option)	**$ 1,100.00**
	11 gauge perforated top screens with 3/16" holes in lieu of standard	**$ 2,400.00**
	Boxed perforated pleated radiator screen in lieu of standard	**$ 700.00**
	Driver's (street) side pickup (Not available with 3-Axis option)	**$ 1,700.00**
	2017 or newer Freightliner 33,000 GVW chassis with dual steering	**$ 99,995.00**

All prices are F.O.B. Richmond, VA
Picture may show some optional features

ACCUBRINE®
automated brine maker
NXT

ACCUBRINE®
blending system

New Unit Name	Discount Price
Accubrine NXT	$ 56,000.00
NXT w/Truck Fill	$ 76,300.00
NXT w/Truck Fill & 1 Additive	$ 87,600.00
NXT w/Truck Fill & 2 Additives	$ 94,800.00
NXT w/Truck Fill & 3 Additives	$101,900.00
OffLoad Option	$ 1,530.00
Stand Alone Truck Fill	$ 50,900.00

Stand Alone Truck Fill with Blending System

	Discount Price
SATF & 1 Additive	$57,000.00
SATF & 2 Additives	$63,100.00
SATF & 3 Additives	$69,300.00

***** *The AccuBrine NXT-Gen brine maker, truck fill and blending systems come standard with 3 phase electric.* Please see options page if interested in single phase electric system.**

Freight: FOB Hebron, KY

All Accubrine NXT systems and options must be installed by a Cargill Representative or a Factory Trained Representative

Installation Costs will be quoted by a Cargill Representative or a Cargill dealer Representative

Important: The customer will also be given a list of pre-installation guidelines. These are things the customer needs to have in place before an Accubrine system can be installed. The guidelines on this list are the sole responsibility of the customer.

Options				
Quantity	**Item Description**	**Part Number**	**Description**	**Price**
	Single Phase Electrical Option Kit for NXT GEN Brinemaker Only - REQUIRES CUSTOMER INSTALLATION		Three to single phase electrical convertor	$ 2,550.00
	Single Phase Electrical Option Kit for NXT GEN Brinemaker and Truck Fill/blending Unit- REQUIRES CUSTOMER INSTALLATION OF PHASE CONVERTOR		Includes Three to single phase electrical convertor for brine maker and VFD installed on the truck load skid	$ 7,050.00
	Single Phase Electrical Option Kit Stand Alone NXT GEN Truck Fill/blending Unit		VFD Kit installed on truck load skid	$ 4,490.00
	Off Load Kit for Truck Fill Unit			$ 1,530.00
	Salt Tank	100011548 (BM-001)	Fiberglass salt tank	$ 19,890.00
	2" Storage Tank Fitting Kit	100011584 (BM-018)	2" tank flange, 2" ball valve, manifold hose barbs *Clamps and gaskets included.	$ 330.00
	3" Storage Tank Fitting Kit	100011737 (BM-079)	3" tank flange, 3" ball valve, manifold hose barbs *Clamps and gaskets included.	$ 612.00
	300 GPM Pump Kit - Price does not inlcude installation - (see below*)	100011741 (BM-083)	Pump, motor control with overload, starter, and circuit breaker 3 phase	$ 6,850.00
	Recycled Water Kit and Dilute Isolation Kit - - Price does not include installation - (see below)**	100011738 (BM-080, BM-200)	Pump, motor starter circuitry, 3-way valve, level sensor, hose barbs and logic control, fittings for splitting dilute water	$ 6,170.00

Legacy Unit Upgrade Prices

	ABM to				RTF to			ABS to		ABS2 to
	ABM	RTF	ABS	ABS2	RTF	ABS	ABS2	ABS	ABS2	ABS2
Region 1	$25,092	$41,718	$51,306	$57,426	$33,048	$42,534	$48,654	$33,048	$39,168	$ 33,048.00
Region 2 (	$26,316	$42,942	$52,530	$58,650	$34,272	$43,758	$49,878	$34,272	$40,392	$ 34,272.00

Notes:
Region 1: AL, AR, GA, KY, IL, IN , IA, MI, MO, MN, MS, NC, OH, SC, TN, WV, WI
Region 2: Air Travel Required (all other remaning states not listed in Region 1)

Pricing is good for all KZ valve models and Banjo valve models that have an HMI. See below pricing for all Alpha-Numeric machines
Pricing includes parts and install labor but DOES NOT include freight.
Freight will vary based on upgrade and location. Please obtain a freight estimate for each customer quote. Actual freight will be included on final invoice and will not be marked up.

Upgrade Components include the following:
- All new electrical control and power panels
- New HMI/PLC and all new screen layout and functionalilty
- New Truck Fill controller and operator interface
- New junction box for applicable models(RTF/ABS/ABS2)
- New Conductivity Controller and Sensor(Yokogawa)
- New proportional control valve for Dilute water circuit
- New micro-ingredient pump (ABS/ABS2)

Legacy Unit Upgrade Prices - Alpha Numeric Machines ONLY

	ABM to				RTF to			ABS to		ABS2 to
	ABM	RTF	ABS	ABS2	RTF	ABS	ABS2	ABS	ABS2	ABS2
Region 1	$26,520	$44,268	$54,876	$61,608	$44,268	$54,876	$61,608	$53,856	$60,588	$ 59,568.00
Region 2	$27,744	$45,492	$56,100	$62,832	$45,492	$56,100	$62,832	$55,080	$61,812	$ 60,792.00

Notes:
Region 1: AL, AR, GA, KY, IL, IN , IA, MI, MO, MN, MS, NC, OH, SC, TN, WV, WI
Region 2: Air Travel Required (all other remaning states not listed in Region 1)
Pricing is good for all Alpha-Numeric machines ONLY
Pricing includes parts and install labor but DOES NOT include freight.
Freight will vary based on upgrade and location. Please obtain a freight estimate for each customer quote. Actual freight will be included on final invoice and will not be marked up.

Upgrade Components include the following:
- All new electrical control and power panels
- New HMI/PLC and all new screen layout and functionalilty
- New Truck Fill controller and operator interface
- New junction box for applicable models(RTF/ABS/ABS2)
- New Conductivity Controller and Sensor(Yokogawa)
- New proportional control valve for Dilute water circuit
- New Banjo valves to replace the Water and Tank valves
- New micro-ingredient pump for ABS/ABS2 models

All Legacy Upgrades must be installed by a Cargill Representative or a Factory Trained Representative

Installation Costs will be quoted by a Cargill Representative or a Cargill dealer Representative

Quantity	Item Description	Part Number	Description	Price
	Accubatch™	110008945	Single phase electric system with salt tank, brine tank and stainless steel deflector shield.	$ 28,700.00

Freight: FOB Hebron, KY

SafeLane®
surface overlay

HDX Version	$5.50 Per. Sq. Ft.

CA-48 Version	$4.50 Per. Sq. Ft.

Freight: Quoted at time of purchase

***All orders are subject to availability**

CLEARLANE®
enhanced deicer

Clearlane Treated Salt Price

Clearlane Customer Pick Up Price by Branch Location

Product	Branch Plant Description	States Covered	Customer Pick Up PRICE
Clearlane	Wurtland KY	KY	**88.00**
Clearlane	Louisville	KY	**88.00**
Clearlane	Burns Harbor	IN	**88.00**
Clearlane	Indianapolis	IN	**88.00**
Clearlane	Cleveland Midland	OH	**72.00**
Clearlane	Baltimore	MD, VA, PA	**98.00**
Clearlane	Duryea	PA, NJ	**88.00**
Clearlane	Lansing	NY	**66.00**
Clearlane	Mt. Marion	NY	**88.00**
Clearlane	Northampton	PA, NJ	**88.00**
Clearlane	Westfield	MA, CT	**88.00**
Clearlane	West Springfield	MA, CT	**88.00**
Clearlane	White River Jct.	VT	**88.00**
Clearlane	Duluth	MN	**88.00**
Clearlane	Ottawa	IL	**98.00**
Clearlane	Saint Louis	MO	**88.00**
Clearlane	Camanche	IA/IL	**98.00**
Clearlane	Burnsville	MN	**88.00**
Clearlane	Winona	MN	**88.00**

***Call Cargill for Freight Costs if not picking up Clearlane yourselves and would like it delivered**

***All orders are subject to availability**

***These prices are for the Winter Season of 2014/15. Prices may change for 2015/16 Winter Season.**