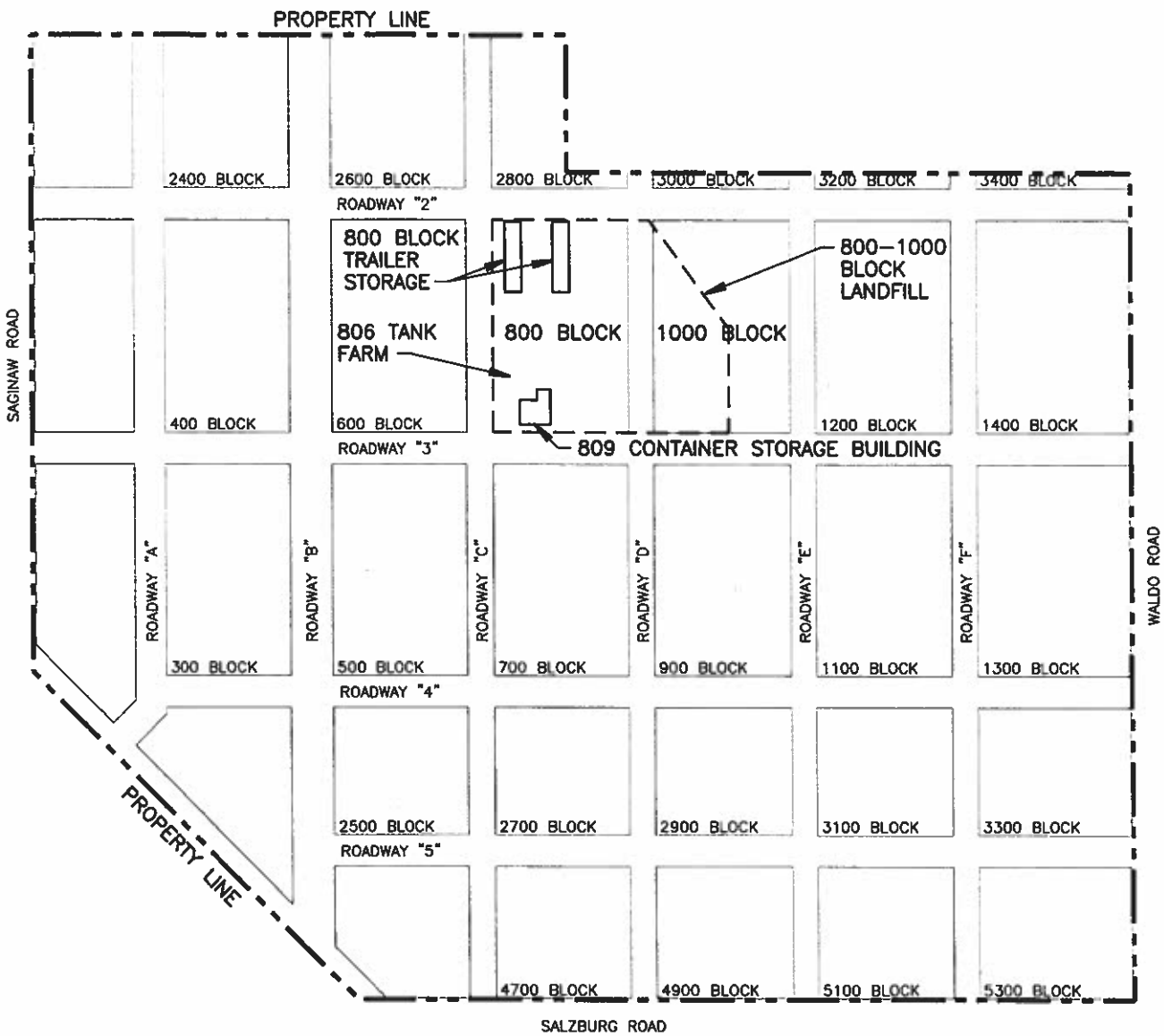

DOW CORNING CORPORATION

DRAWN BY: NLW	DATE: MAR, 2010
CHECKED BY: MG	EDITED BY: NLW032310
FILE NAME: Site Plan.Dwg	

SITE PLAN

DOW CORNING CORPORATION MIDLAND SITE
3901 SOUTH SAGINAW
MIDLAND, MICHIGAN

PROJECT NUMBER	SCALE: 1" = 800'

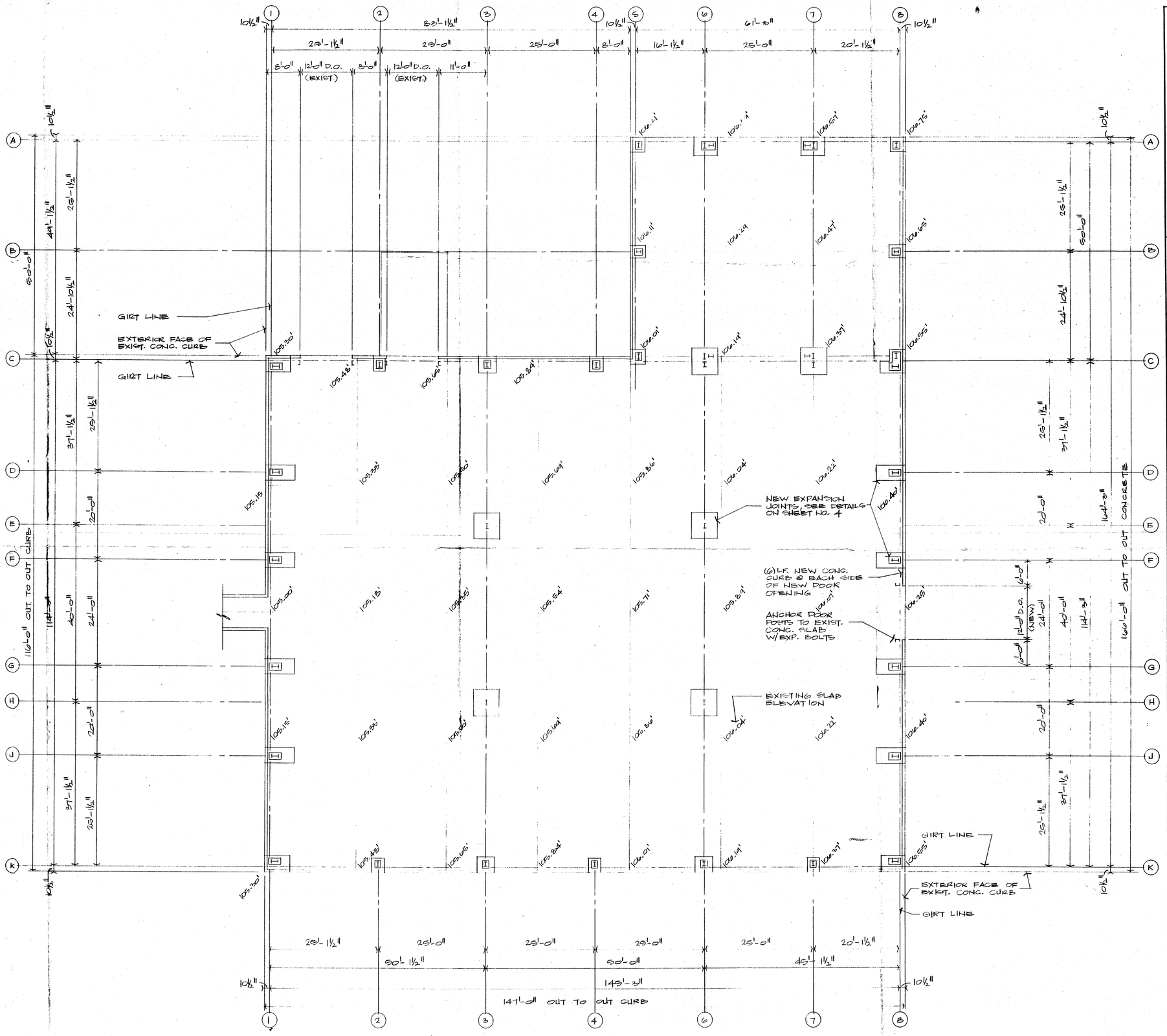

FLOOR PLAN

SCALE 3/32" = 1'-0"

GREGORY CONSTRUCTION CO.
1009 S. HENRY 517.892.4551
BAY CITY, MICHIGAN 48706

LAURENCE S. GREGORY, P.E., P.C.
5288 CROWFOOT DR.
BAY CITY, MI 48588
313-828-3771

ISSUED FOR:

APPROVAL 12-16-92

DRUM SHELTER CONTAINMENT BUILDING FOR:
DOW CORNING CORPORATION
BLDG. 809
MIDLAND PLANT

DRAWN LSG
DATE 12-15-92
CHECKED
DATE

SHEET NO.
1

03/24/99

FOOTING SCHEDULE

TYPE	LOCATION	EXIST. SLAB ELEVATION	TOP OF FTG. ELEVATION	BOTT. OF FTG. ELEVATION	FOOTING THICKNESS
F1	C-8	106.55'	104.50'	101.50'	3'-0"
F2	C-7	106.37'	106.67'	102.67'	4'-0"
F3	C-6	106.16'	106.67'	102.67'	4'-0"
F4	C-5	106.01'	105.00'	102.50'	2'-6"
F5	E-6, H-6	105.90'	106.67'	102.33'	4'-4"
	E-3, H-3	105.53'		102.00'	4'-8"
F6	D-1, J-1	105.17'	104.50'	101.50'	3'-0"
	F-1, G-1	105.06'		101.50'	3'-0"
	D-8, J-8	106.42'		101.50'	3'-0"
	F-8, G-8	106.31'		101.50'	3'-0"
F7	C-1	105.30'	104.50'	101.50'	3'-0"
	K-8	106.55'		101.50'	3'-0"
F7R	K-1	105.30'	104.50'	101.50'	3'-0"
F8	C-2, K-2	105.52'	105.00'	102.00'	3'-0"
	C-4, K-4	105.95		102.33'	2'-8"
	K-7	106.37		102.83'	2'-2"
F9	C-3, K-3	105.73'	105.00'	102.00'	3'-0"
	K-6	106.16'		102.67'	2'-4"
F10	A-8	106.75'	105.00'	103.25'	1'-9"
F10R	A-5	106.21'	105.00'	102.67'	2'-4"
F11	A-7	106.57'	105.00'	102.83'	2'-2"
F11R	A-6	106.36'	105.00'	102.83'	2'-2"
F12	B-5	106.11'	105.00'	102.50'	2'-6"
	B-3	106.65'		103.00'	2'-0"

FOUNDATION NOTES

1. Foundations are designed to support "Landmark" structural system as manufactured by Butler Manufacturing Co., Kansas City, MO. The system shall be designed to support (30) psf roof snow load, (10) psf collateral load, (80) mph wind speed, Exposure "B", in accordance with Uniform Building Code, 1985 edition. Butler Structural Framing Plans and Erection Drawings shall be signed and sealed by an Engineer licensed in the State of Michigan.
2. Foundation design based on allowable soil bearing capacity of 3000 psf.
3. All concrete shall have a minimum compressive strength of 3000 psi at (28) days.
4. All concrete reinforcing steel shall be Grade 60.
5. All anchor bolts shall meet ASTM A307. Provide leveling nuts and washers for erection of fixed base endwall columns. Place high strength non-shrink grout between endwall column base plate and top of footing.

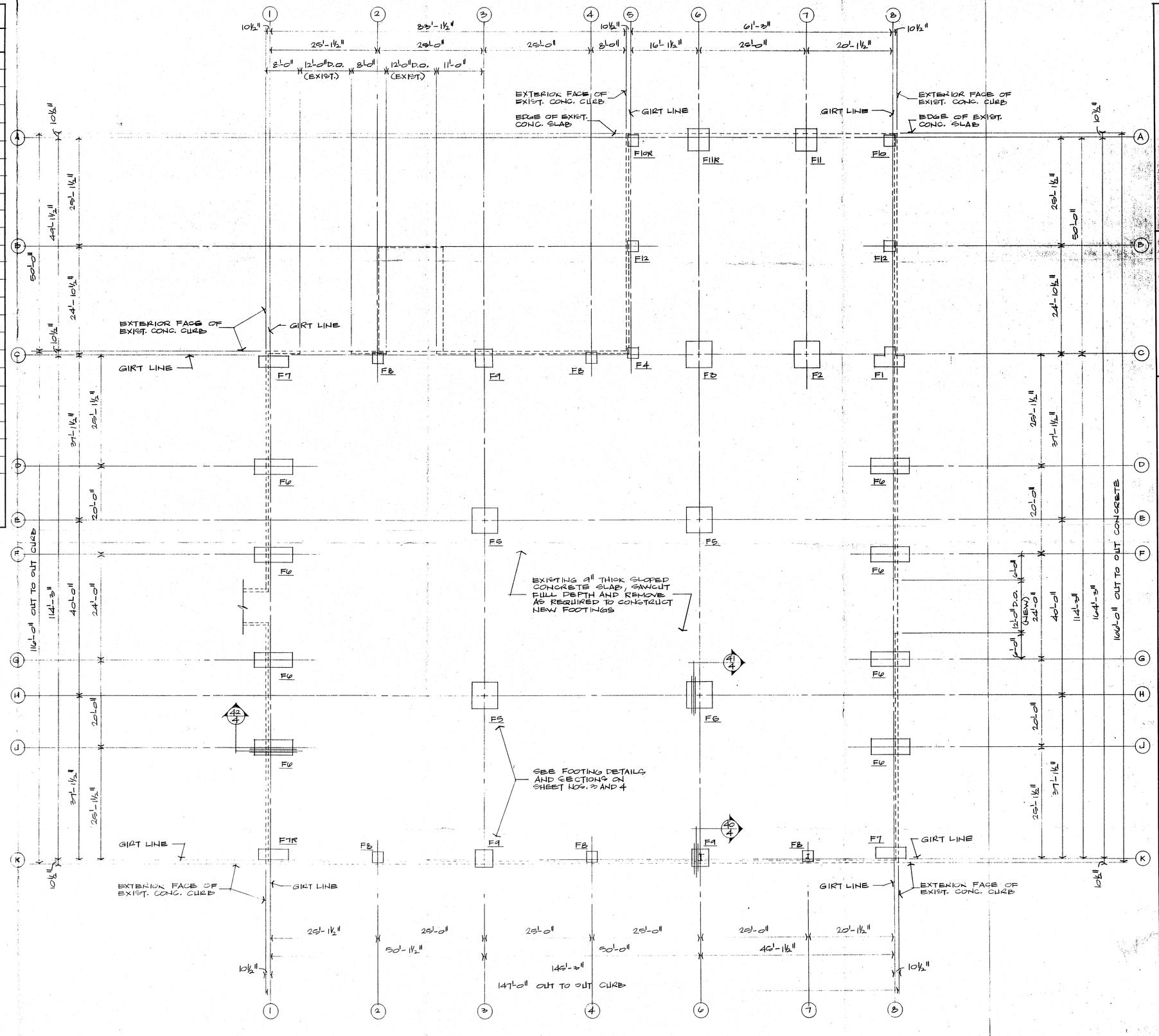

FOUNDATION PLAN

SCALE 3/32"=1'-0"

GREGORY CONSTRUCTION CO.
1009 S. HENRY 517 893 4551
BAY CITY, MICHIGAN 48706

C. LAWRENCE E. GREGORY
5566 CHAMPCOT DR.
TROY, MI 48098
313-283-2771

ISSUED FOR:
APPROVAL 12-16-92

DRUM SHELTER CONTAINMENT BUILDING FOR:
DOW CORNING CORPORATION
BLDG. 809
MIDLAND PLANT

DRAWN LSG
DATE 12-15-92
CHECKED
DATE

SHEET NO. 2

03/24/99

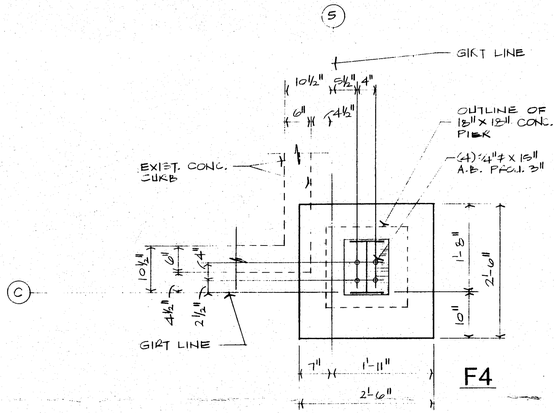

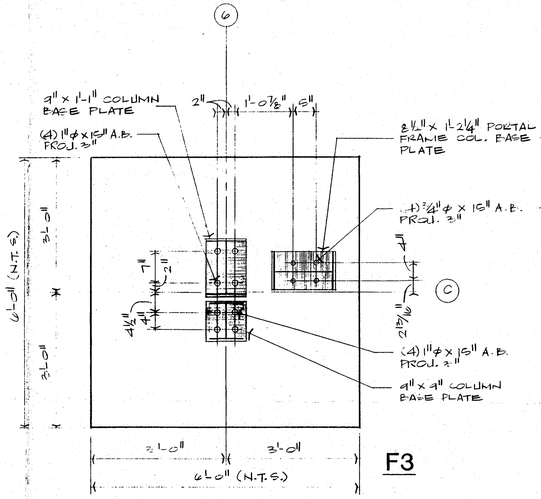

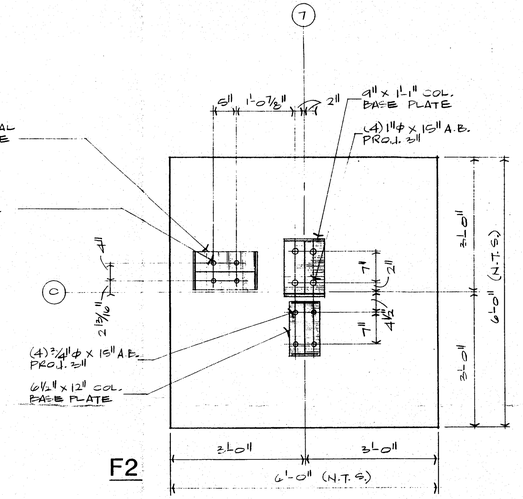

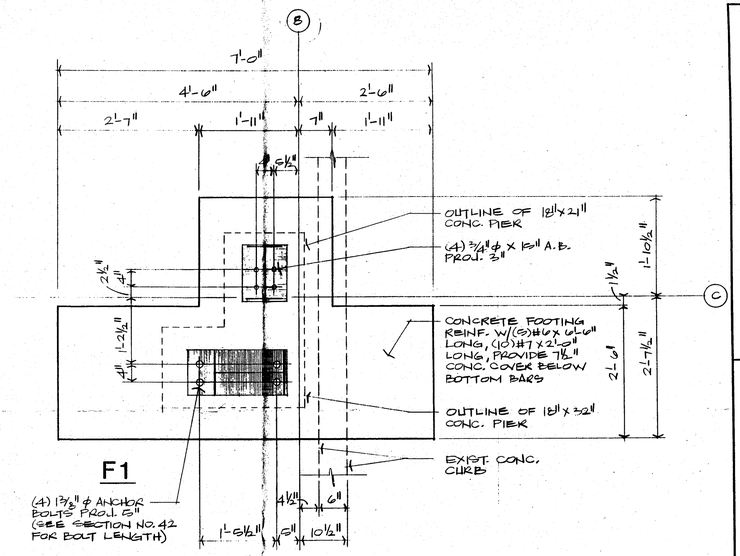

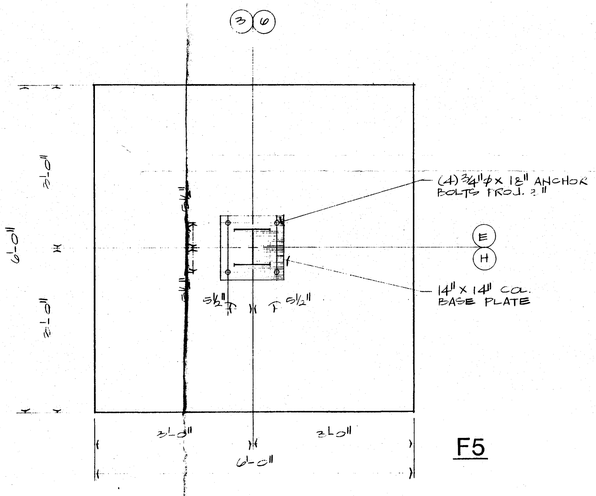

FOOTING DETAILS

SCALE 3/4" = 1'-0"

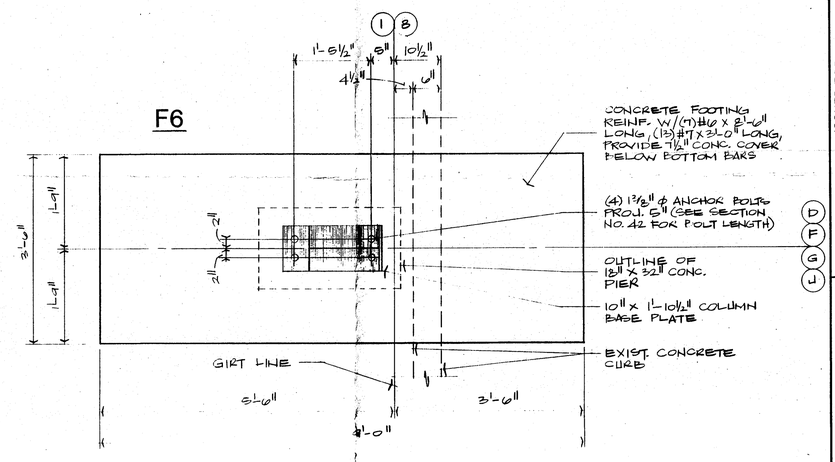

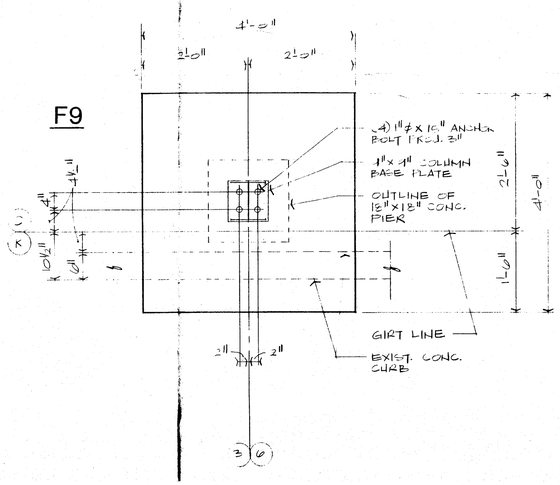

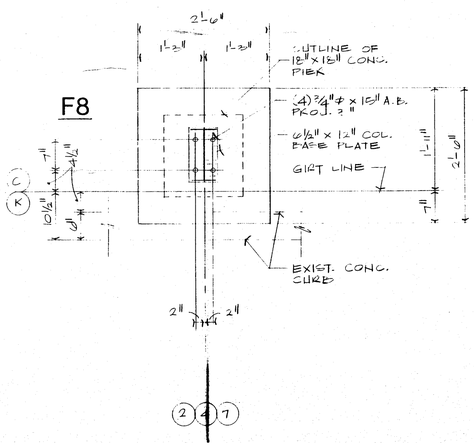

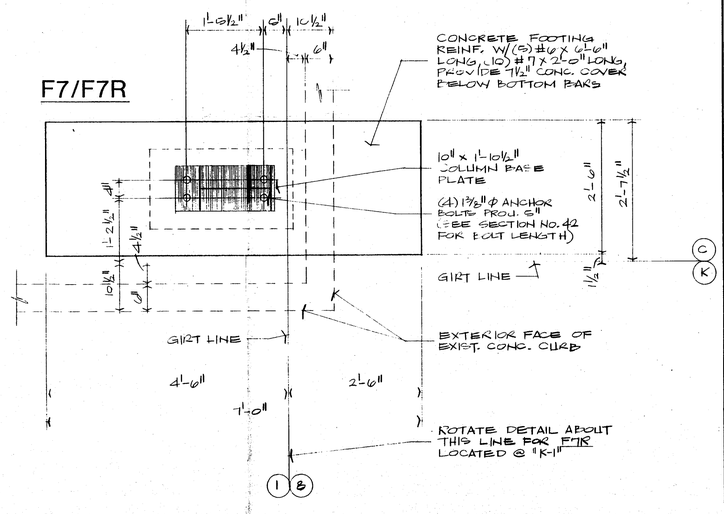

GREGORY CONSTRUCTION CO.
1009 S. HENRY
BAY CITY, MICHIGAN 48706
517 892 4551

LAURENCE S. GREGORY, P.E., P.C.
5268 CROWFOOT DR.
TROY, MICHIGAN 48098
313-828-3771

ISSUED FOR:

APPROVAL 12-16-92

DRUM SHELTER CONTAINMENT BUILDING FOR:

DOW CORNING CORPORATION

BLDG. 809
MIDLAND PLANT

DRAWN LSG	
DATE 12-15-92	
CHECKED	
DATE	

SHEET NO.

3

03/24/99

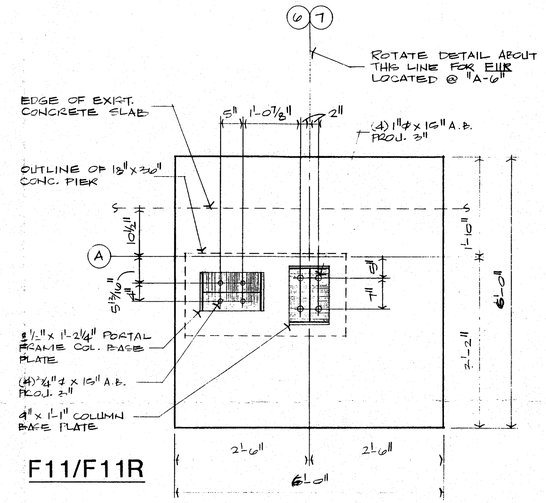

F11/F11R

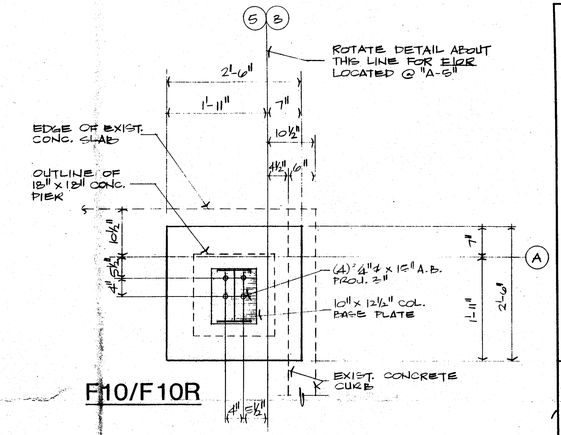

F10/F10R

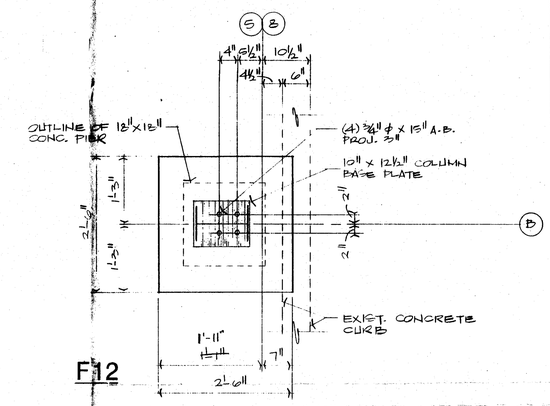

F12

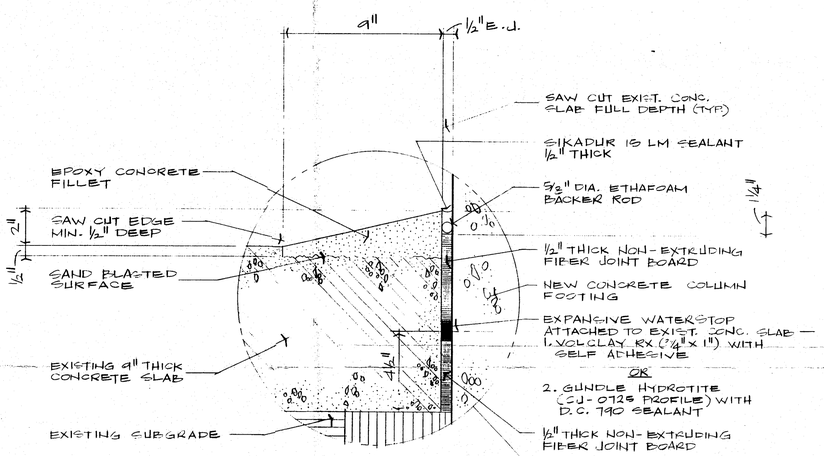

EXPANSION JOINT DETAIL FOR ALL INTERIOR COLUMN FOOTINGS

SCALE 3"=1'-0"

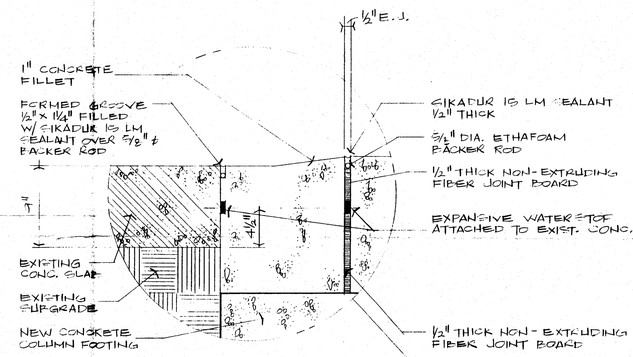

EXPANSION JOINT DETAIL FOR ALL EXTERIOR COLUMN FOOTINGS

SCALE 1 1/2"=1'-0"

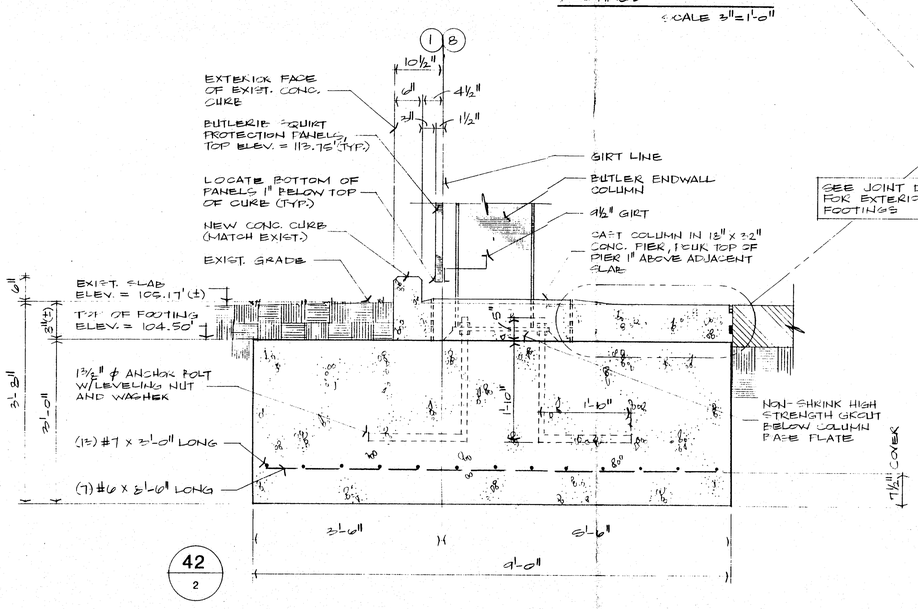

42
2

SEE JOINT DETAILS FOR EXTERIOR COLUMN FOOTINGS

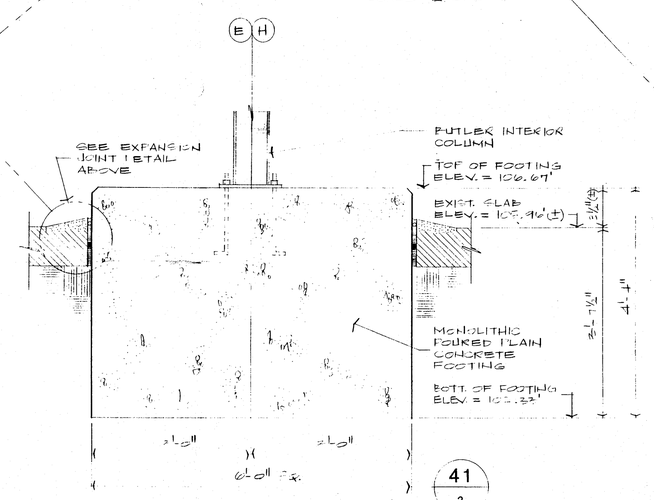

41
2

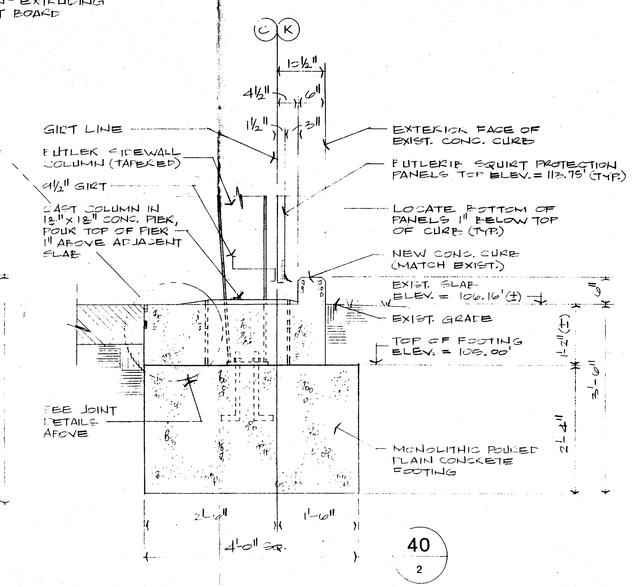

40
2

FOOTING DETAILS AND SECTIONS

SCALE 3/4"=1'-0"

GREGORY CONSTRUCTION CO.
1009 S. HENRY
517-892-4551
BAY CITY, MICHIGAN 48706

LAWRENCE S. GREGORY, P.E., P.S.
5268 CROWFOOT DR.
TROY, MI 48098
313-828-3771

ISSUED FOR:

APPROVAL	
12-16-92	

DRUM SHELTER CONTAINMENT BUILDING FOR:

DOW CORNING CORPORATION

BLDG. 809
MIDLAND PLANT

DRAWN	LSG
DATE	12-15-92
CHECKED	
DATE	

SHEET NO.

03/24/99

BOLT CHART

	QTY.	DESCRIPTION	BOLT	NUT
A	4	$\frac{3}{4}$" X $2\frac{1}{2}$" A325T	097284	095235
B	6	$\frac{3}{4}$" X $2\frac{1}{2}$" A325T	097284	095235
C	8	$\frac{3}{4}$" X $2\frac{1}{2}$" A325T	097284	095235
D	12	$\frac{3}{4}$" X $2\frac{1}{2}$" A325T	097284	095235
E	8	$\frac{7}{8}$" X $2\frac{1}{4}$" A325T	097285	095237
F	12	1" X 3" A325T	097287	095238

SEE NOTE 1 → B

NOTE:
ALL BOLTS ARE HIGH STRENGTH (A325-T) HEX HEAD WITH HEAVY HEX NUTS AND ARE TO BE INSTALLED USING THE "TURN-OF-THE-NUT TIGHTENING" METHOD SPECIFIED IN THE AISC MANUAL.

WX FLANGE BRACES

	CODE	DETAIL	"Y" DIM
1	005673	C003	1'-$10\frac{1}{2}$"
2	005650	C004	2'-$4\frac{1}{2}$"
3	005727	C003	3'-$4\frac{1}{2}$"
4	005654	C004	2'-$10\frac{1}{2}$"
5	005742	C003	2'-$4\frac{1}{2}$"

LM FLANGE BRACE

	CODE	DETAIL	LENGTH
6	700098-31-2	FB01	2'-$7\frac{1}{4}$"

PURLIN BRACES FOR WX

(2) ROWS TOP

544067 3'-11 SPACES
544167 5'-0 SPACES
544047-16 1'-1 SPACE FIELD
WORK TO EAVE MEMBER OF LANDMARK

SEE PLANO DRAWINGS 107988 & 1080028

PURLIN BRACES FOR LANDMARK

EAVE LOCATIONS

544003 TOP (W/OUT PURLIN AT EAVE)
544040 TOP (WITH PURLIN AT EAVE)
544097 & 544098 DIAGONAL

5' SPACES

544003 TOP AND BOTTOM

3' SPACES

544083-40-1 TOP AND BOTTOM

AT RIDGE

544000 TOP
544001 BOTTOM

SEE PLANO DRAWING 105817 FOR CONNECTIONS
SEE DIAGRAMS THIS SHEET FOR LOCATIONS

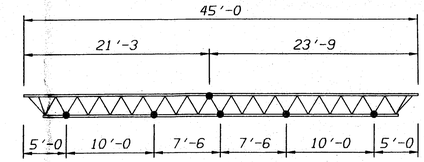

PURLIN BRACE LOCATION FOR 45' TRUSS PURLIN

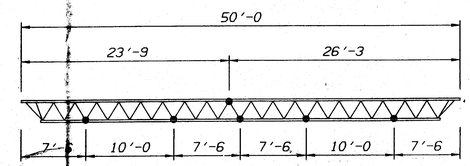

PURLIN BRACE LOCATION FOR 50' TRUSS PURLIN

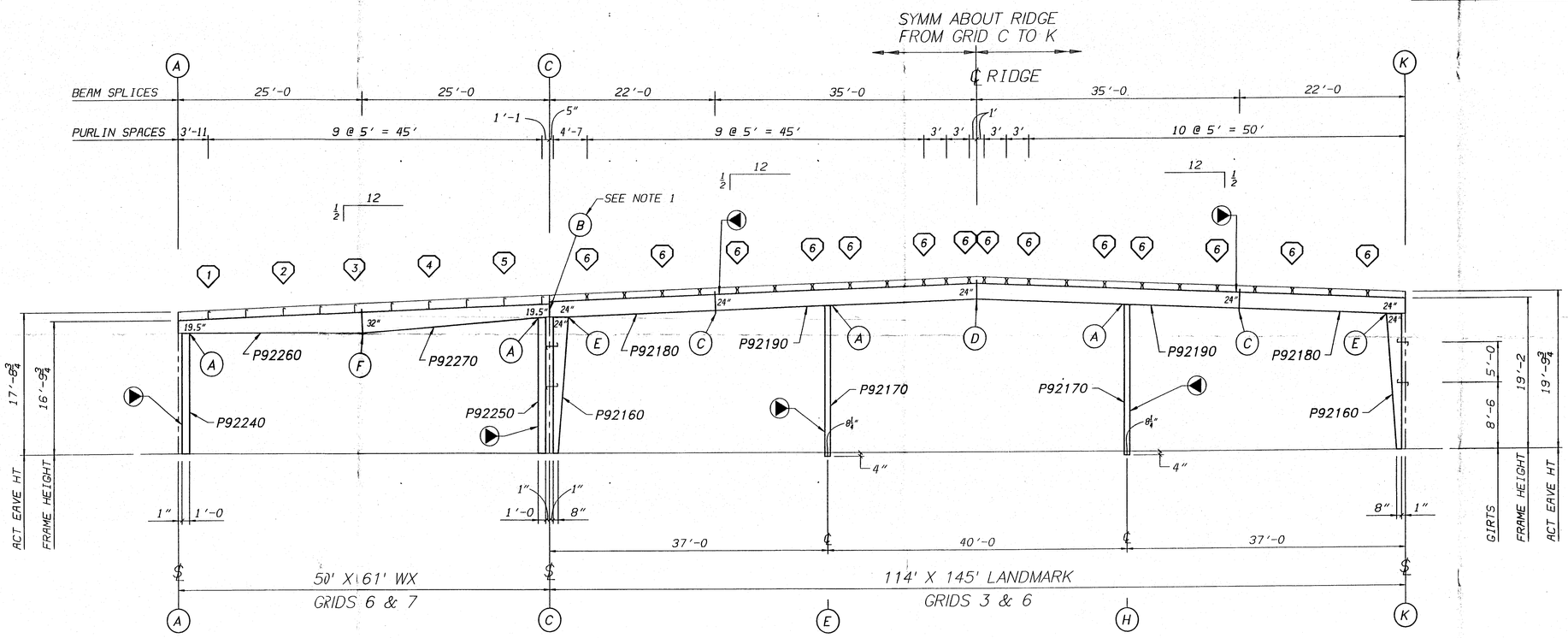

CROSS SECTION

STATE OF MICHIGAN
DAVID L. PIPER
ENGINEER
No. 30400
12-14-92
LICENSED PROFESSIONAL ENGINEER

GENERAL NOTES:

1. BOLT CODE B IS THE CONNECTION OF THE WX BEAM TO THE EAVE BEAM OF THE LANDMARK. AT GRID 7 CONNECT TO INTERMEDIATE SIDEWALL COLUMN AND USE (2) ET2005 SHIM PLATES.
2. INDICATES DIRECTION MARK. LOCATE AS SHOWN.
3. SEE SHEET -05C FOR DETAILS.

REVISION NO. 1	REVISION NO. 2	REVISION NO. 3	REVISION NO. 4
DATE:	DATE:	DATE:	DATE:
DRAWN BY:	DRAWN BY:	DRAWN BY:	DRAWN BY:
CHECKED BY:	CHECKED BY:	CHECKED BY:	CHECKED BY:

BUTLER MANUFACTURING COMPANY
GENERAL OFFICES-KANSAS CITY, MISSOURI

BUILDER: GREGORY CONSTRUCTION, BAY CITY, MICHIGAN

PROJECT: DOW CORNING, MIDLAND, MICHIGAN

BUILDING ORDER DESCRIPTION: 114 X 145 X 20 LMDS; 50 X 61 X 20 WX; $\frac{1}{2}$:12 UBC-85 EXP B; 40 SL 80 MPH 10 COLL

DRAWING TITLE: CROSS SECTION

ENGINEER APPROVAL: AW
DRAWN BY: BIEKER
AG FILE NO: D04127402
CHECKED BY: HURD
DATE: 12-15-92
DRAWING NUMBER: D92-041274-02
REV. 00

15:29:26.5 12/21/92 BIEKER DRAWING.DISK:(DRAWINGS.CUSTOM)D04127402.DG
03/24/99

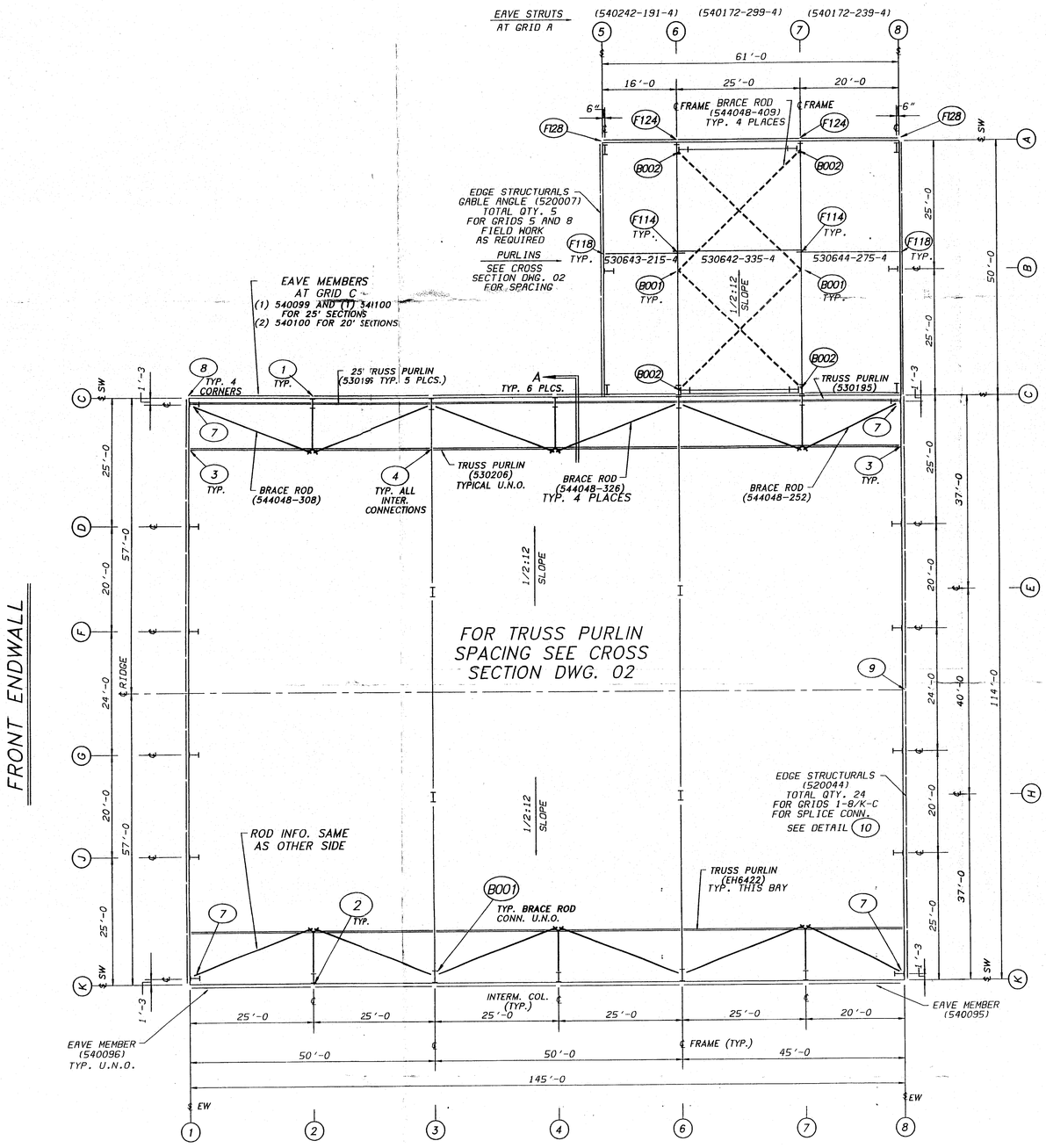

FRONT ENDWALL

ROOF STRUCTURAL LAYOUT

REVISION NO. 1	REVISION NO. 2	REVISION NO. 3	REVISION NO. 4
DATE:	DATE:	DATE:	DATE:
DRAWN BY:	DRAWN BY:	DRAWN BY:	DRAWN BY:
CHECKED BY:	CHECKED BY:	CHECKED BY:	CHECKED BY:

BUTLER

BUTLER MANUFACTURING COMPANY
GENERAL OFFICES-KANSAS CITY, MISSOURI

BUILDER:	PROJECT:	BUILDING ORDER DESCRIPTION:	DRAWING TITLE:
GREGORY CONSTRUCTION	DOW CORNING	114 X 145 X 20 50 X 61 X 20 WX 1/2:12 UBC 1985 40SL/80mph/10CL EXP. B	ROOF STRUCTURAL LAYOUT

ENGINEER APPROVAL:

DRAWN BY: YAKEL	AG FILE NO: D04127404
CHECKED BY: BIEKER	DATE: 12-14-92
DRAWING NUMBER: D92-041274-04	REV. 00

STATE OF MICHIGAN DANIEL J. BIEKER ENGINEER No. 30400 12-14-92 LICENSED PROFESSIONAL ENGINEER

DC:\P41274\04\MISTRC\DRAWING\DRAWING.DWG JBF 08/12/12 10:33:11

03/24/99

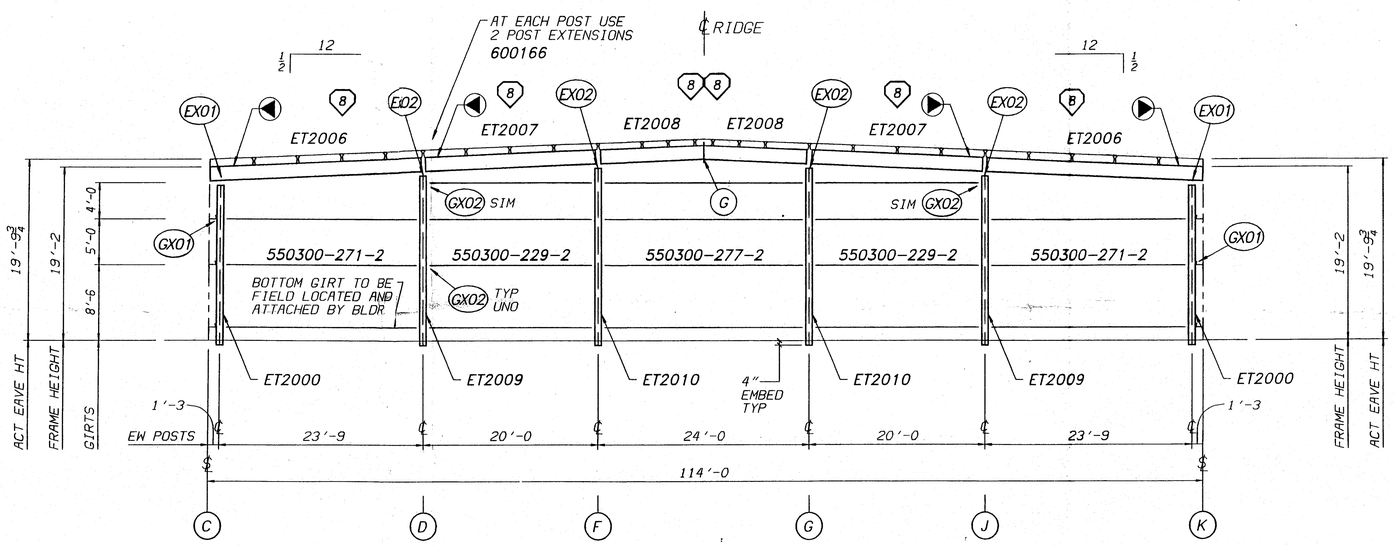

FRONT ENDWALL ELEVATION GRID 1

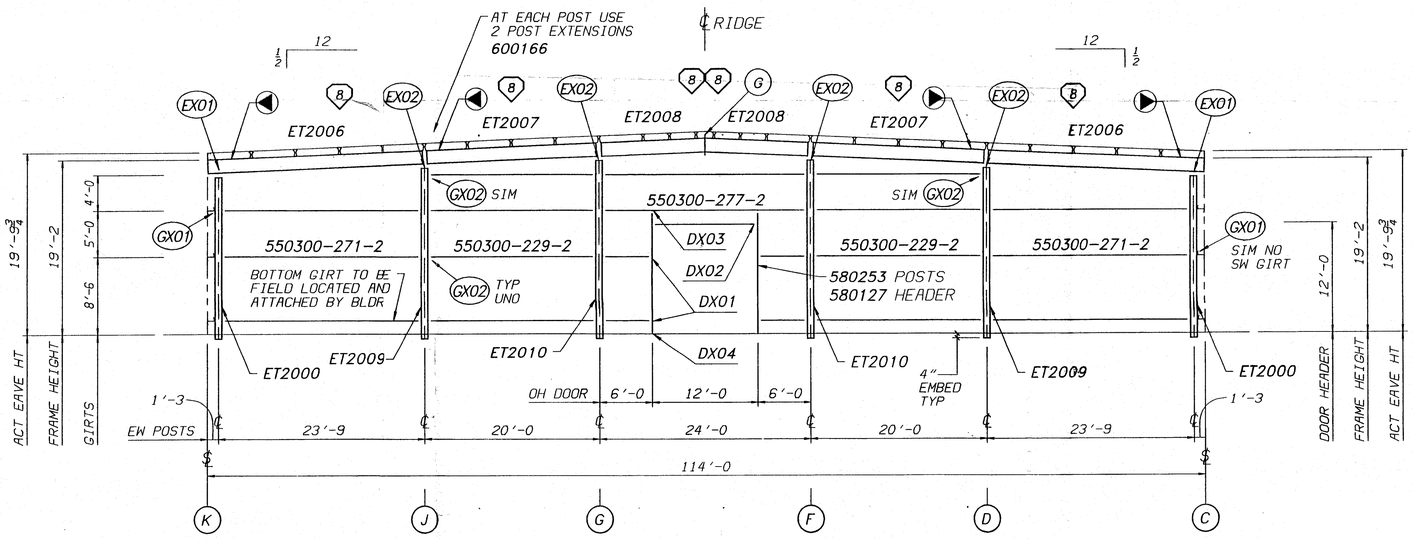

REAR ENDWALL ELEVATION GRID 8

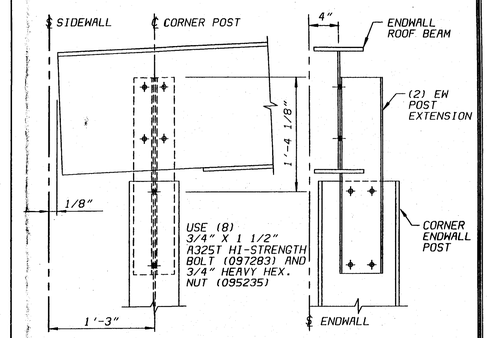

EZ002

DETAIL EX01 | CORNER POST TO ROOF BEAM CONNECTION

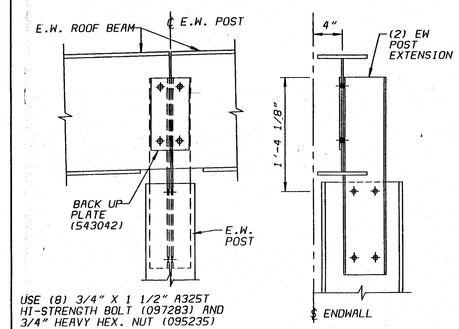

EZ005

DETAIL EX02 | ENDWALL POST TO ROOF BEAM CONNECTION AT ENDWALL POST LOCATION

BOLT CHART

	QTY.	DESCRIPTION	BOLT	NUT
G	8	1" X 3" A325T	097287	095238

NOTE:
ALL BOLTS ARE HIGH STRENGTH (A325-T) HEX HEAD WITH HEAVY HEX NUTS AND ARE TO BE INSTALLED USING THE "TURN-OF-THE-NUT TIGHTENING" METHOD SPECIFIED IN THE AISC MANUAL.

EW FLANGE BRACE

	CODE	DETAIL	LENGTH
8	700098-28-0	FB02	2'-4"

STATE OF MICHIGAN
DAN L. DOLEWERY
ENGINEER
No. 30400
12-15-92
LICENSED PROFESSIONAL ENGINEER

ENGINEER APPROVAL:

REVISION NO. 1	REVISION NO. 2	REVISION NO. 3	REVISION NO. 4
DATE:	DATE:	DATE:	DATE:
DRAWN BY:	DRAWN BY:	DRAWN BY:	DRAWN BY:
CHECKED BY:	CHECKED BY:	CHECKED BY:	CHECKED BY:

BUTLER
BUTLER MANUFACTURING COMPANY
GENERAL OFFICES-KANSAS CITY, MISSOURI

BUILDER: GREGORY CONSTRUCTION, BAY CITY, MICHIGAN

PROJECT: DOW CORNING, MIDLAND, MICHIGAN

BUILDING ORDER DESCRIPTION: 114 X 145 X 20 LMDS; 50 X 61 X 20 WX; 1/2:12 UBC-85 EXP B; 40 SL 80 MPH 10 COLL

DRAWING TITLE: ENDWALL ELEVATIONS

DRAWN BY: BIEKER | AC FILE NO: D04127405
CHECKED BY: HUED | DATE: 12-15-92

DRAWING NUMBER: D 92-041274-05 | REV. 00

11:2:46.7 12/21/92 BIEKER D:\TASK:(DRAWINGS.CUSTOM)D04127405.DG

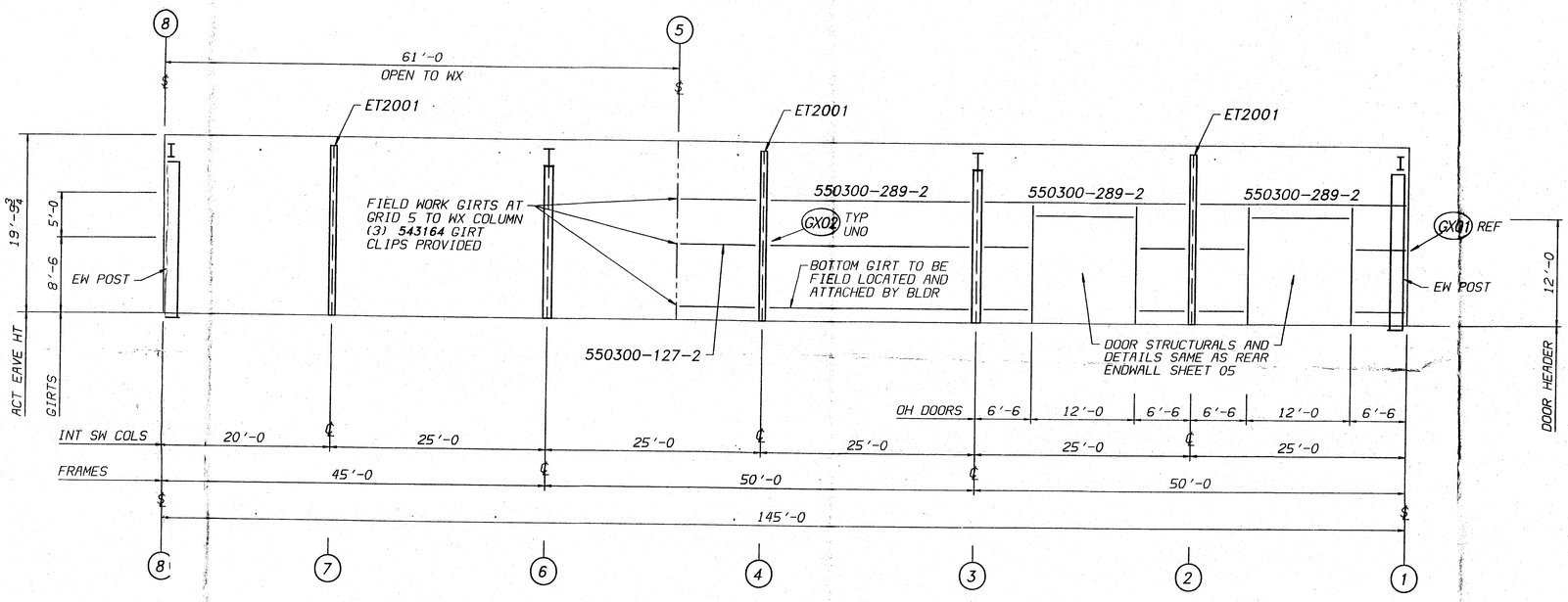

LEFT SIDEWALL ELEVATION GRID C

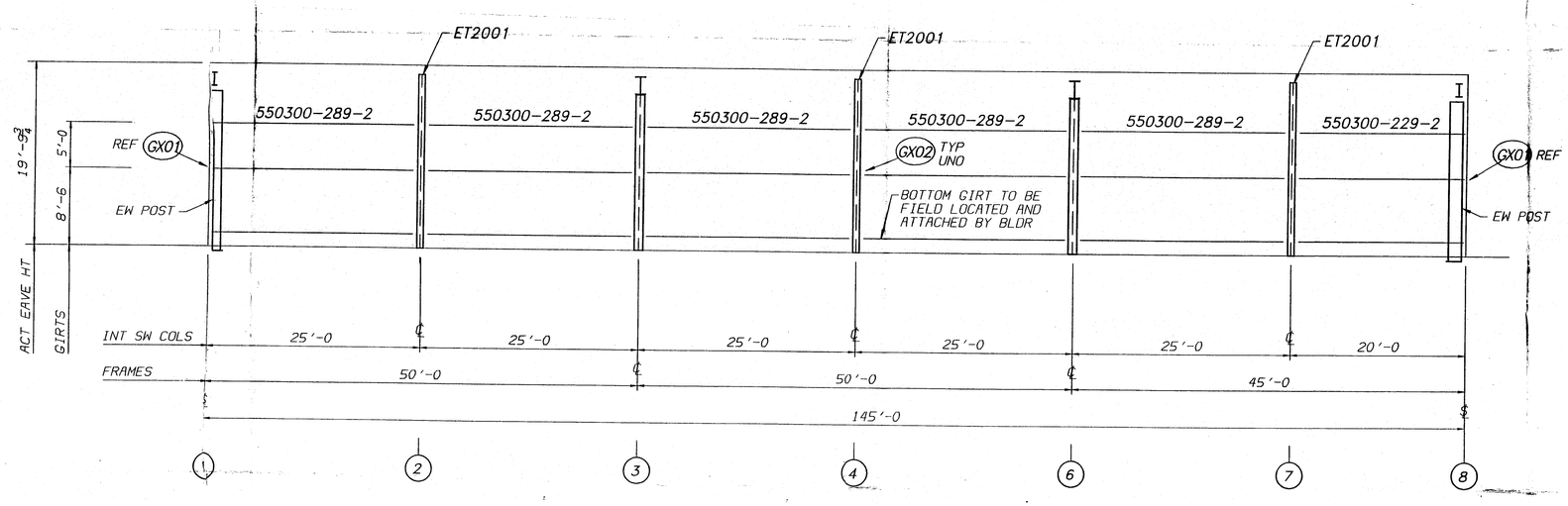

RIGHT SIDEWALL ELEVATION GRID A

STATE OF MICHIGAN
DAN D. NUMPER
ENGINEER
No. 30400
12-23-92
LICENSED PROFESSIONAL ENGINEER

REVISION NO. 1	REVISION NO. 2	REVISIIN NO. 3	REVISION NO. 4
DATE:	DATE:	DATE:	DATE:
DRAWN BY:	DRAWN BY:	DRAWN BY:	DRAWN BY:
CHECKED BY:	CHECKED BY:	CHECKED BY:	CHECKED BY:

BUTLER
BUTLER MANUFACTURING COMPANY
GENERAL OFFICES-KANSAS CITY, MISSOURI

BUILDER: GREGORY CONSTRUCTION BAY CITY, MICHIGAN

PROJECT: DOW CORNING MIDLAND, MICHIGAN

BUILDING ORDER DESCRIPTION: 114 X 145 X 20 LMDS 50 X 61 X 20 WX ½:12 UBC-85 EXP B 40 SL 80 MPH 10 COLL

DRAWING TITLE: SIDEWALL ELEVATIONS

ENGINEER APPROVAL: KU
DRAWN BY: BIEKER
AC FILE NO: D04127405A
CHECKED BY: HURD
DATE: 12-15-92
DRAWING NUMBER: D92-041274-05A
REV. 00

11:3:13.8 12/21/92 BIEKER DRAWING.DISK:[DRAWINGS.CUSTOM]D04127405A.DG

83/24/99

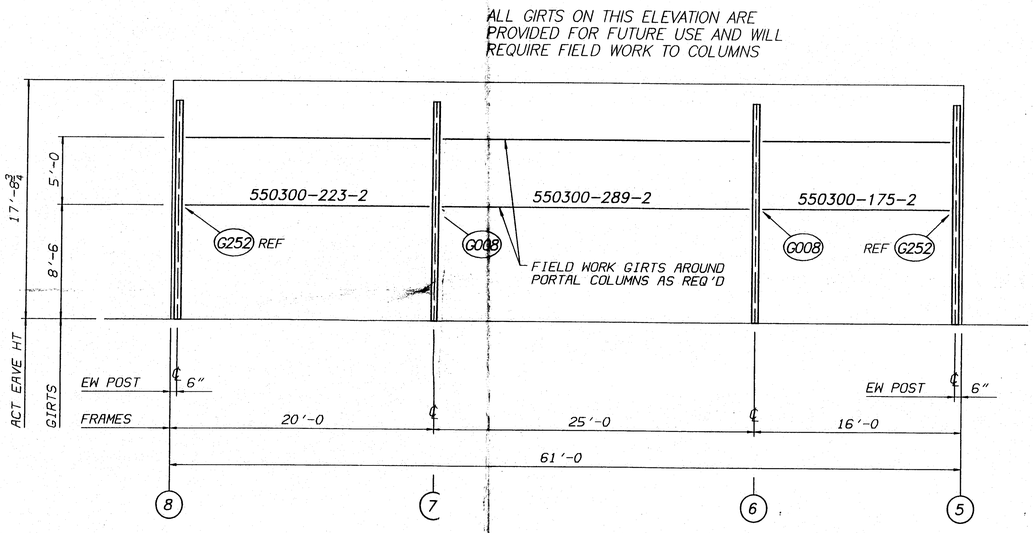

WX SIDEWALL ELEVATION GRID A

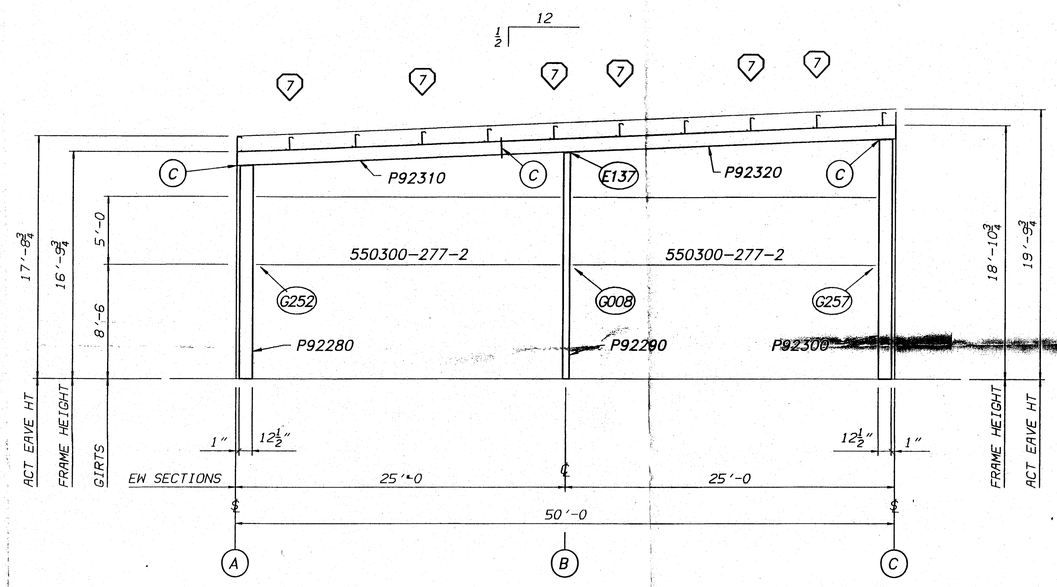

WX ENDWALL ELEVATION GRID 5

REVERSE FOR ENDWALL AT GRID 8

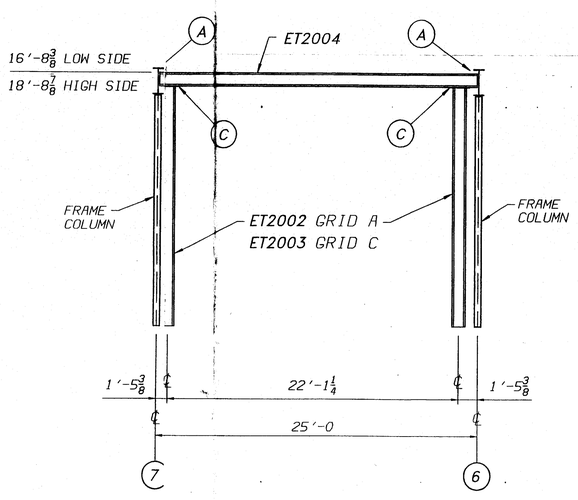

PORTAL FRAME GRID A AND C

BOLT CHART				
	QTY.	DESCRIPTION	BOLT	NUT
A	4	3/4" X 2 1/2" A325T	097284	095235
C	8	3/4" X 2 1/2" A325T	097284	095235

NOTE:
ALL BOLTS ARE HIGH STRENGTH (A325-T) HEX HEAD WITH HEAVY HEX NUTS AND ARE TO BE INSTALLED USING THE "TURN-OF-THE-NUT TIGHTENING" METHOD SPECIFIED IN THE AISC MANUAL.

WX EW FLANGE BRACE			
	CODE	DETAIL	LENGTH
7	005660	C001	1'-4 1/2"

STATE OF MICHIGAN DANIEL W. HUPPERT ENGINEER No. 30400 12-29-92 LICENSED PROFESSIONAL ENGINEER

REVISION NO. 1	REVISION NO. 2	REVISON NO. 3	REVISION NO. 4
DATE:	DATE:	DATE:	DATE:
DRAWN BY:	DRAWN BY:	DRAWN BY:	DRAWN BY:
CHECKED BY:	CHECKED BY:	CHECKED BY:	CHECKED BY:

BUTLER MANUFACTURING COMPANY
GENERAL OFFICES-KANSAS CITY, MISSOURI

BUILDER: GREGORY CONSTRUCTION, BAY CITY, MICHIGAN

PROJECT: DOW CORNING, MIDLAND, MICHIGAN

BUILDING ORDER DESCRIPTION: 114 X 145 X 20 LMDS, 50 X 61 X 20 WX, 1/2:12 UBC-85 EXP B, 40 SL 80 MPH 10 COLL

DRAWING TITLE: WX WALL ELEVATIONS

ENGINEER APPROVAL: AW
DRAWN BY: BIEKER
AC FILE NO: D041274058
CHECKED BY: HURD
DATE: 12-15-92
DRAWING NUMBER: D92-041274-05B
REV. 00

12:10:59.8 12/21/92 BIEKER DRAWING.DISK:(DRAWINGS.CUSTOM)D041274058.DG

03/24/99

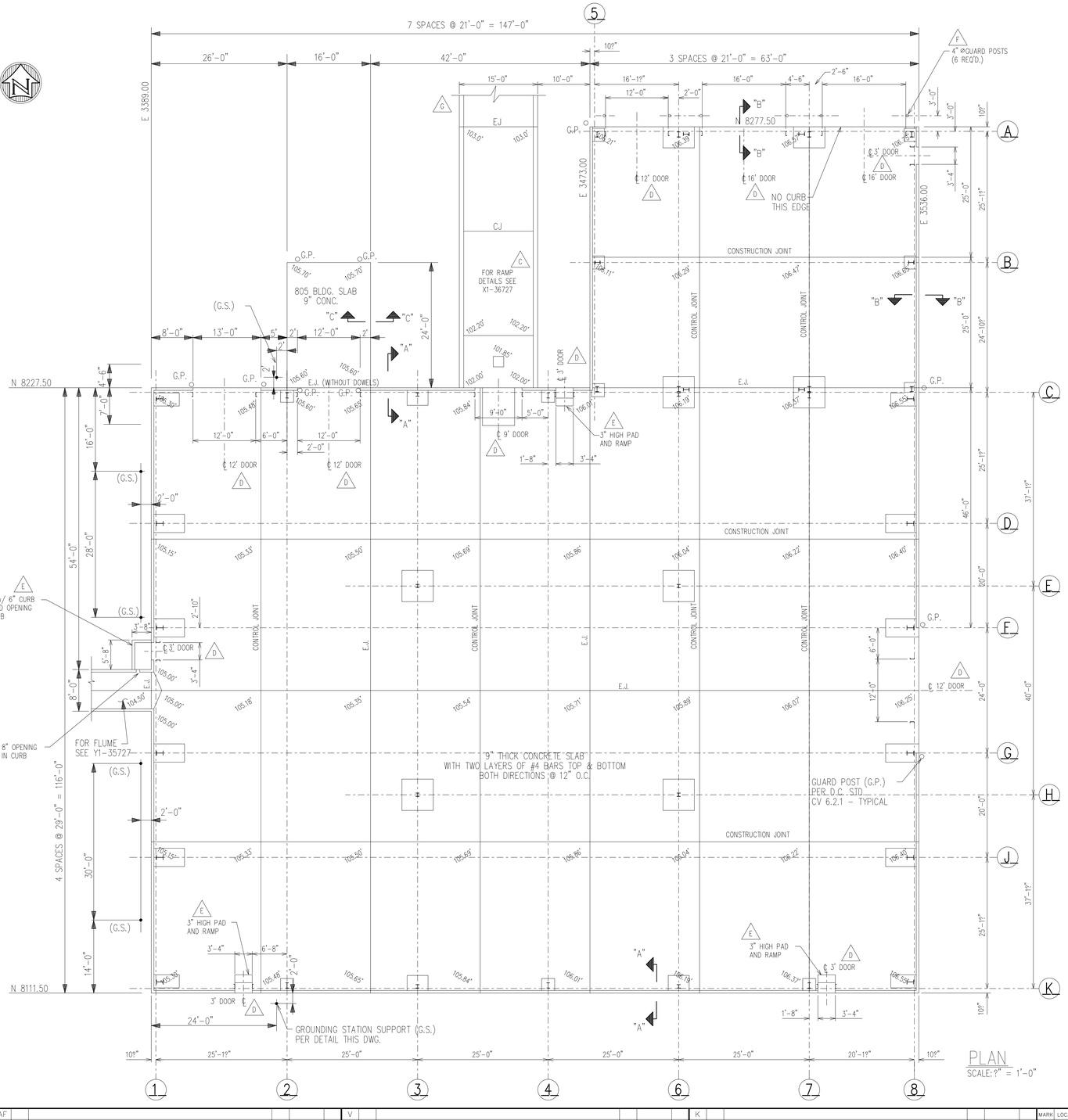

PLAN

SCALE: ?" = 1'-0"

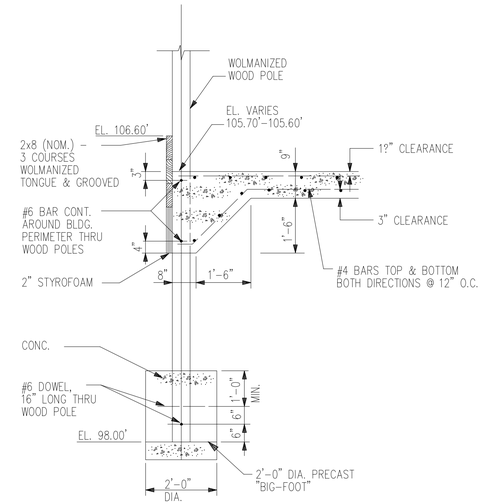

SECTION "C-C" (TYP. @ 805 BLDG. SLAB)

SCALE: ?" = 1'-0"

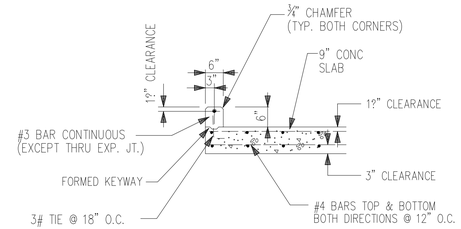

SECTION "A-A" (TYPICAL)

SCALE: ?" = 1'-0"

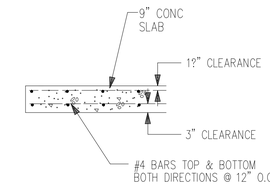

SECTION "B-B" (TYPICAL)

SCALE: ?" = 1'-0"

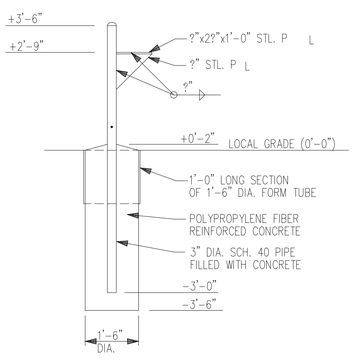

GROUNDING STATION SUPPORT DETAIL

SCALE: ?" = 1'-0"

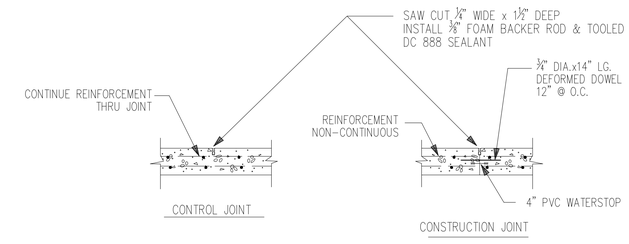

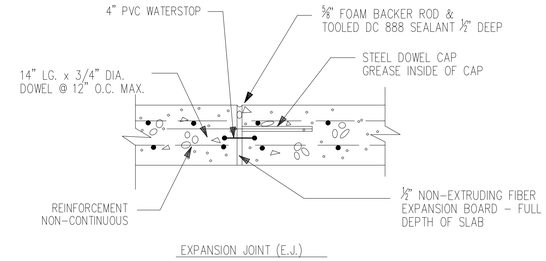

EXPANSION JOINT (E.J.)

CONCRETE JOINT DETAILS

NO SCALE

GENERAL NOTES:

1. SLABS SHALL HAVE EXPANSION, CONTROL, AND CONSTRUCTION JOINTS LOCATED AS SHOWN. ALL JOINTS SHALL CONTINUE THRU CURBS.
2. ALL CONCRETE SHALL BE 4,000 PSI COMPRESSIVE STRENGTH FOR THIS SLAB CONSTRUCTION.
3. ALL STEEL REINFORCEMENT SHALL BE GRADE 60 DEFORMED BARS.

IN JAN.-MAR. 1993, PREFAB BUTLER MANUFACTURING CO. STEEL BUILDING WAS ERECTED OVER EXISTING CONCRETE SLAB. FOUNDATION AND SLAB MODIFICATION DETAILS ARE COVERED BY CONTRACTOR RECORD PRINTS. GREGORY CONSTRUCTION CO.

DATE LAST GENERAL UPDATE: 04JAN2010

CADD

MARK	LOC.	REVISIONS	BY	DATE	APP
A	GEN	REVISED AS BUILT	RJF	10-15-87	JLV
B	GEN	ADDED FOOTINGS FOR STEEL FRAMING, REFERENCE ONLY	RJF	02MAR93	PC
C	C-6	ADDED LOADING DOCK RAMP	RJF	14JUL94	NSD
D	GEN	ADDED DOOR LOCATIONS	RJF	16SEP94	PC
E	A-4	ADDED CONCRETE SLAB AND RAMP AT PERSONNEL DOORS	RJF	18OCT94	PC
F	"J"	ADDED GUARD POSTS AT DOORS ALONG NORTH SIDE	RJF	18JAN95	PC
G	C-7	REVISED LOADING RAMP	JAM	25JUN97	NSD

DESIGNED J.L.VANDERMALE	DATE 08-18-86	DOW CORNING CORPORATION
DRAWN J.K.LAFAVE	DATE 09-09-86	MIDLAND PLANT BLDG. 809
CHECKED J.L.VANDERMALE	DATE 09-02-87	CONTAINER CONTAINMENT SLAB PLAN & DETAILS
APPROVED R.G.COOK	DATE 09-04-87	SCALE: INCH / FOOT — AS NOTED; DRAWING NUMBER X1-35726; REVISION G

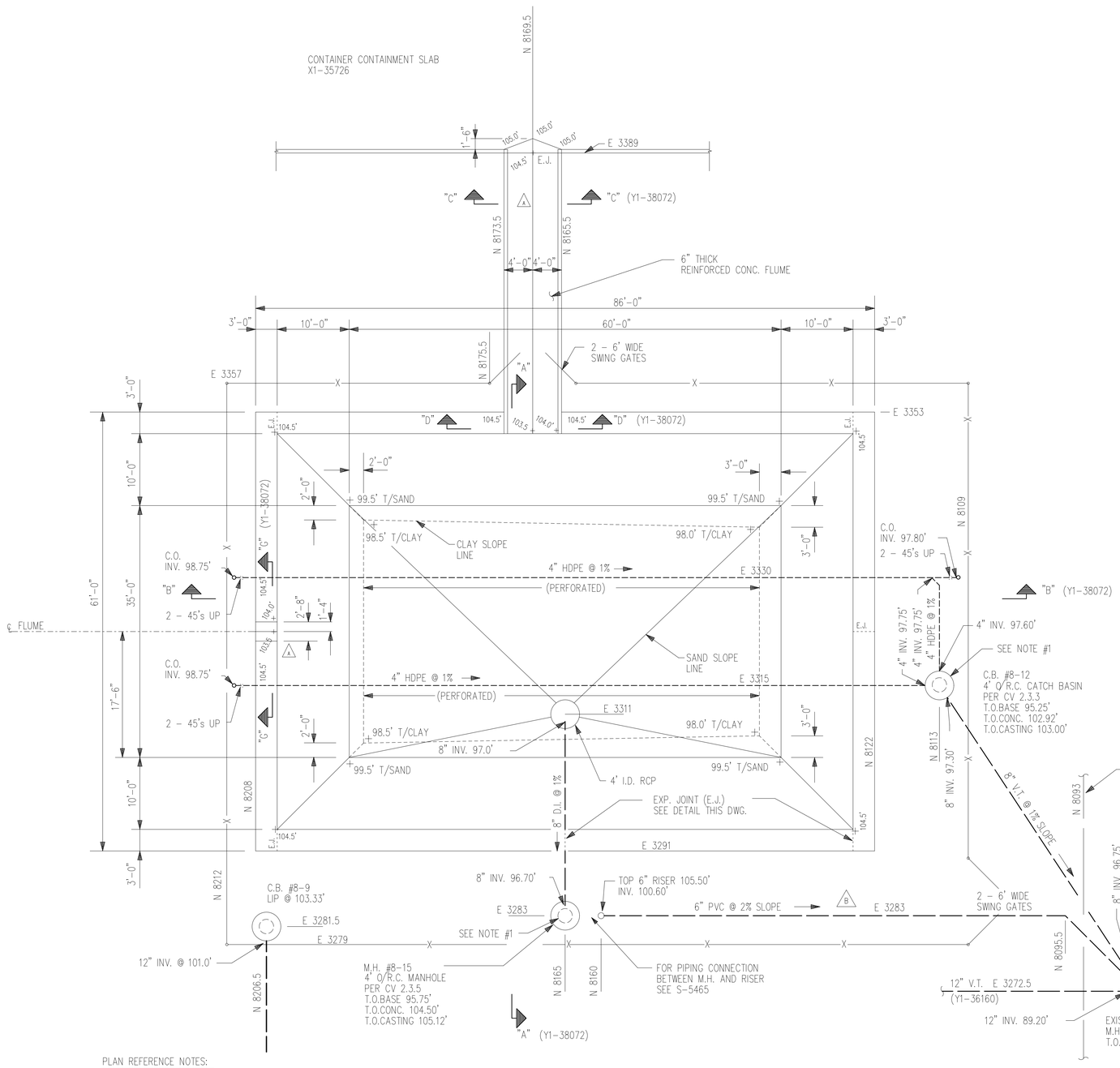

PLAN

SCALE: ?" =1'-0"

PLAN REFERENCE NOTES:

#1 PROVIDE KOR-N-SEAL BOOTS FOR ALL PIPE PENETRATIONS THROUGH NEW MANHOLES.

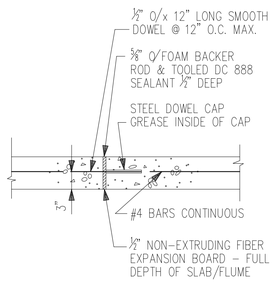

EXPANSION JOINT DETAIL

SCALE: 1" = 1'-0"

LAST GENERAL UPDATE: 04JAN2010

CADD

MARK	LOC.	REVISIONS	BY	DATE	APP
A	B-4 C-4	REVISED FLUMES	JKL	03-29-88	JLV
B	E-2	ADDED 6" PVC LINE FROM M.H. #8-15	RJF	07-21-88	JLV

DESIGNED J.L.VANDERMALE	DATE 08-18-86	DOW CORNING CORPORATION
DRAWN J.K.LAFAVE	DATE 09-12-86	MIDLAND PLANT 800 BLOCK
CHECKED J.L.VANDERMALE	DATE 09-02-87	CONTAINER CONTAINMENT SPILL POND PLAN
APPROVED R.G.COOK	DATE 09-04-87	SCALE INCH FOOT AS NOTED · DRAWING NUMBER Y1-35727 · REVISION B

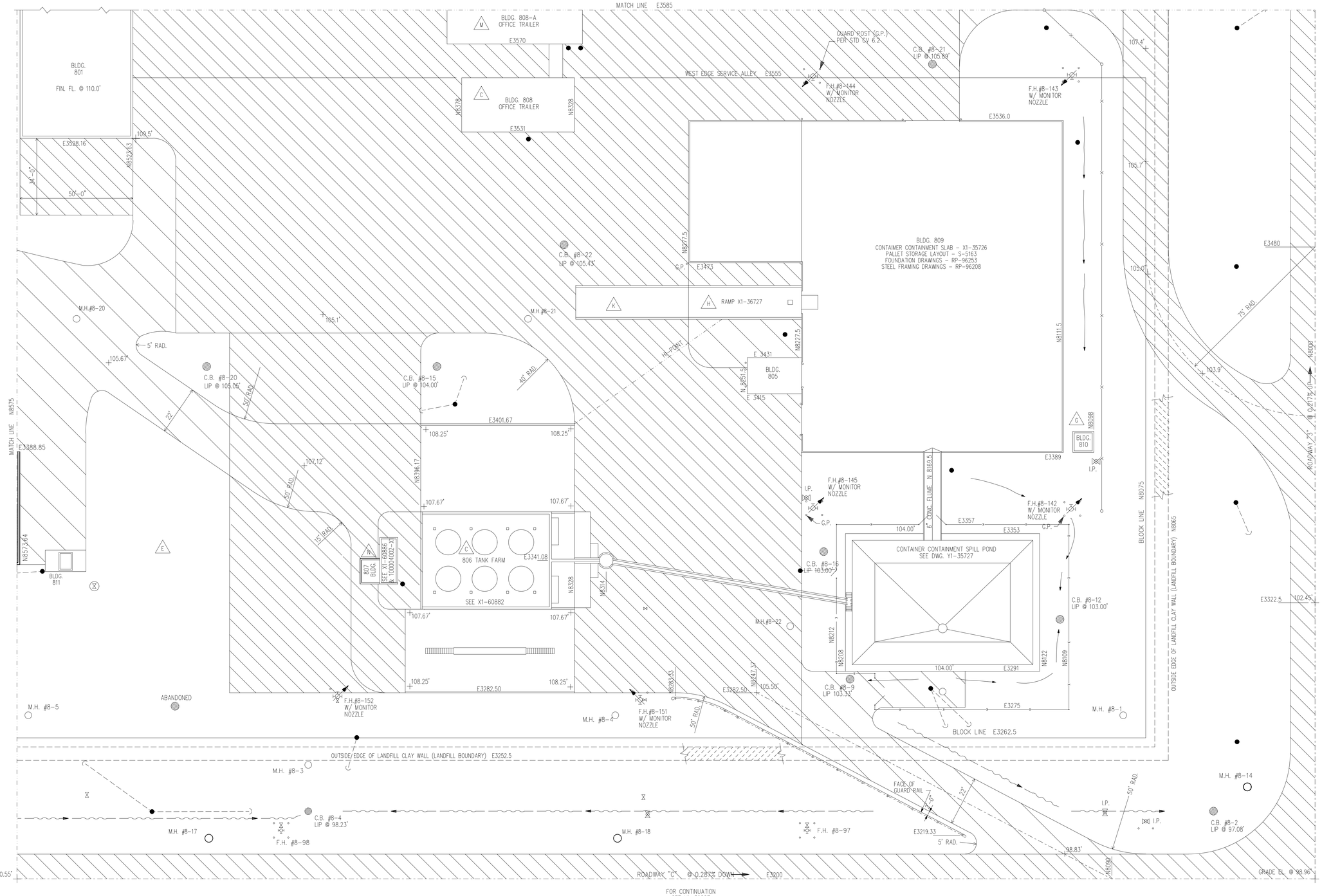

V									K	F-5	ADDED LOADING SLAB	JAM	25JUN97	NSD	MARK	LOC.	REVISIONS	BY	DATE	APP
W									L	GEN	REVISED POWER POLES PER WADE-TRIM SURVEY	WRL	01FEB99	SFH	A	GEN	ADDED CONTAINER CONTAINMENT SLAB & SPILL POND	JKL	01-05-87	JVM
X									M	E-7	ADDED NEW 808-A TRAILER AND POWER POLES	CWR	27JUL99	SFH	B	GEN	GENERAL UPDATE	RJF	09-01-88	JLV
Y									N	D-3	ADDED 807 BLDG. ADDITION	CAF	12JAN07	SFH	C	GEN	UPDATE-ADDED 806 TANK FARM, BLDGS. 807 & 808	RJF	03-20-89	CEB
Z									P						D	GEN	GENERAL UPDATE	RJF	11-28-89	MJB
AA									Q						E	B-3	REMOVED 803 TANK FARM	RJF	26MAR90	PC
AB									R						F	GEN.	GENERAL UPDATE	LSA	09-19-90	MJB
AC									S						G	J-4	ADDED BLDG. 810	RJF	21JAN93	SFH
AD									T						H	F-5	ADDED RAMP NORTH OF BLDG. 809	RJF	12JUL94	NSD
AE									U						J	C-2	1995 PAVING UPDATES	MWG	04JAN96	SFH

	DATE
DESIGNED	
DRAWN R.J. FORTIER	03-11-86
CHECKED G.E. BARTOS	03-11-86
APPROVED R.G. COOK	03-11-86

REFERENCES

NUMBER	TITLE
Y1-45405	NORTHWEST SECTION - 800 BLOCK
Y1-45403	SOUTHEAST SECTION - 800 BLOCK
Y1-29955	NORTHWEST SECTION - 700 BLOCK
Y1-30887	SOUTHEAST SECTION - 600 BLOCK

PMSS INFOR-MATION	ENGRG. DISC.	DWG. TYPE
	CA RG	PLAN

CADD

DOW CORNING CORPORATION

MIDLAND PLANT — 800 BLOCK

ROADS & GROUNDS
SOUTHWEST SECTION

SCALE	INCH	FOOT	DRAWING NUMBER	REVISION
	1"	=20'	Y1-45401	N

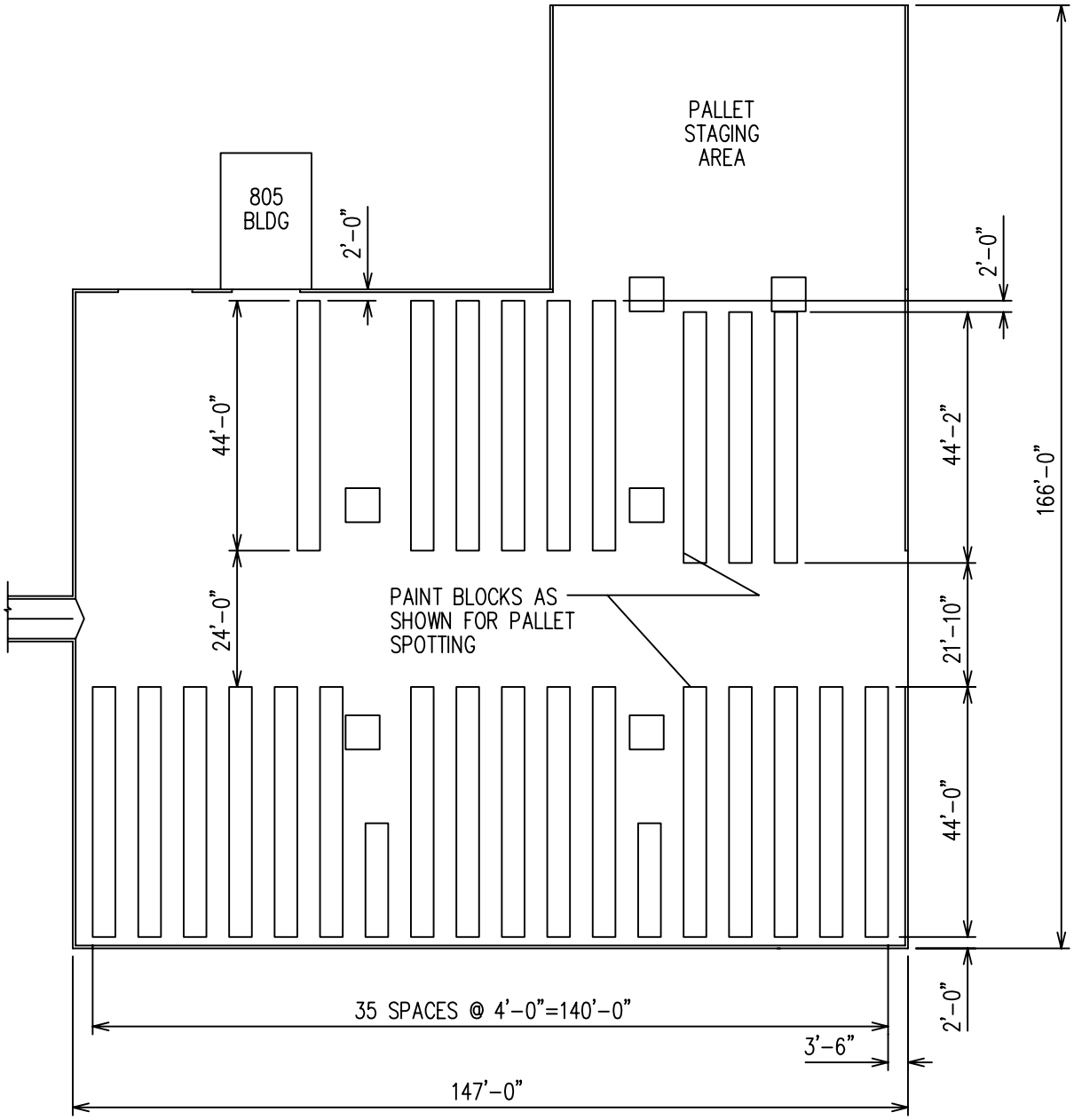

DOW CORNING CORPORATION	
DRAWN BY: NLW	DATE: JUNE, 2011
CHECKED BY: MG	EDITED BY: NLW030210
FILE NAME: FgC1-2.Dwg	

FIGURE C1-2

CONTAINER STORAGE CONFIGURATION IN 809 BUILDING

DOW CORNING CORPORATION MIDLAND SITE
3901 SOUTH SAGINAW
MIDLAND, MICHIGAN

PROJECT NUMBER	SCALE: AS SHOWN

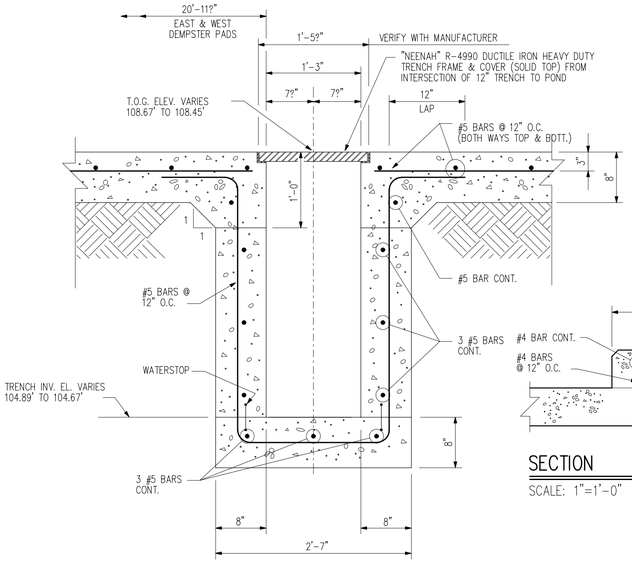

SECTION B
SCALE: 1"=1'-0" X1-60882

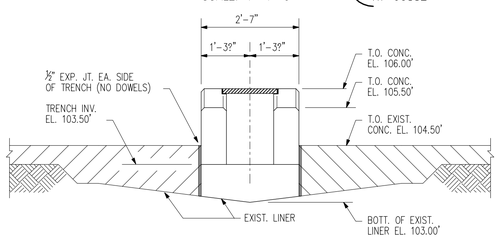

SECTION H
SCALE: ?" =1'-0" X1-60882

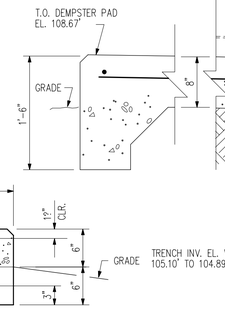

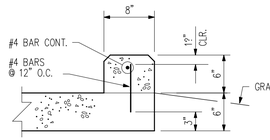

SECTION J
SCALE: 1"=1'-0" X1-60882

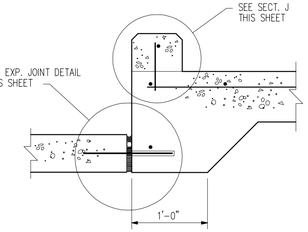

SECTION K
SCALE: 1"=1'-0" X1-60882

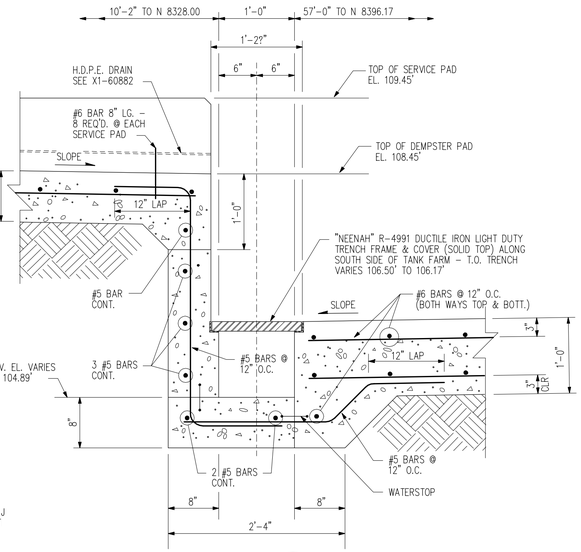

SECTION C
SCALE: 1"=1'-0" X1-60882

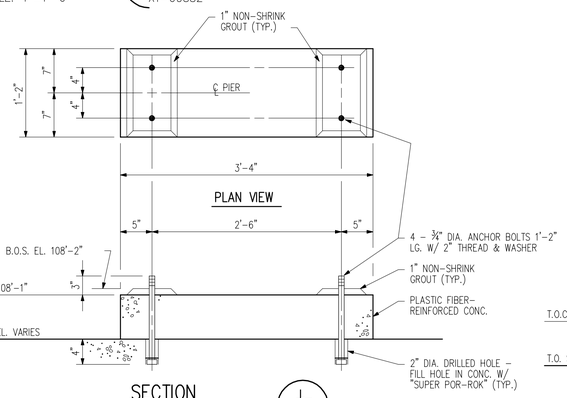

SECTION L
SCALE: 1"=1'-0" X1-60882

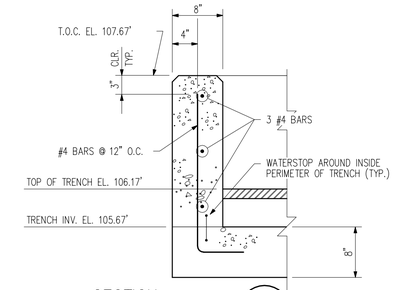

SECTION D
SCALE: 1"=1'-0" X1-60882

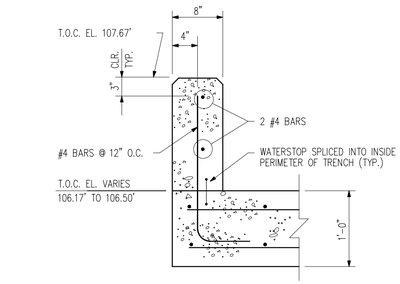

SECTION E
SCALE: 1"=1'-0" X1-60882

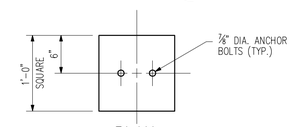

PLAN

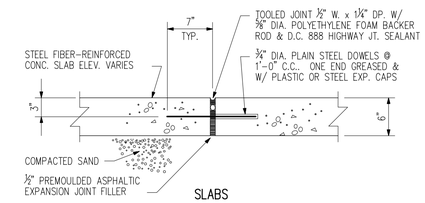

SLABS

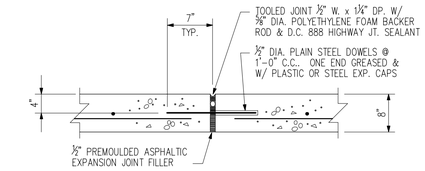

TRENCH WALLS

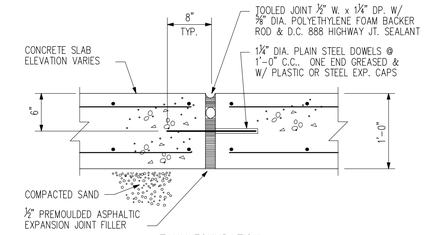

TANK FOUNDATION

TYPICAL EXPANSION JOINTS

NO SCALE SEE DWG. X1-60882

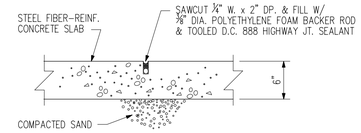

TYPICAL CONTROL JOINT

NO SCALE SEE DWG. X1-60882

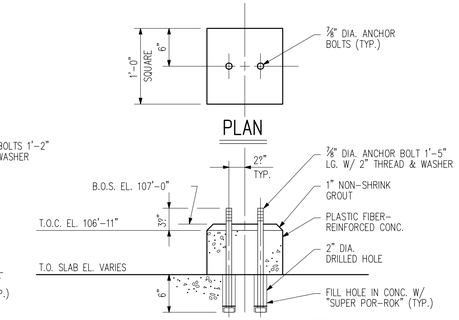

SECTION F
SCALE: 1"=1'-0" X1-60882

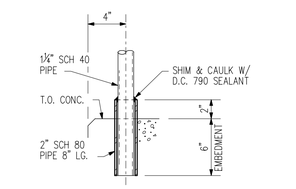

TYPICAL HANDRAIL CONNECTION

SCALE: 1½"=1'-0" SEE DWG. X1-60882

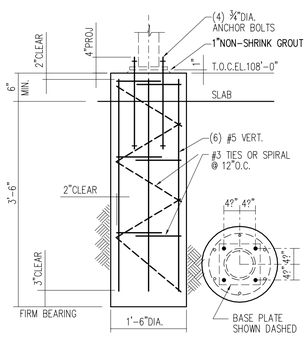

PLAN

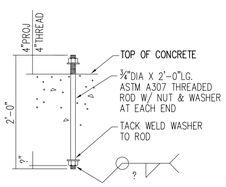

PIPE POLE FOUNDATION DETAIL " 1 "

SCALE: ?"=1'-0"

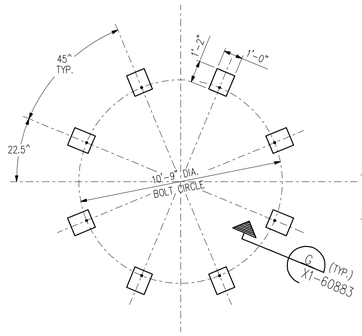

TYPICAL EQUIP.PAD LAYOUT

SCALE: ?"=1'-0"

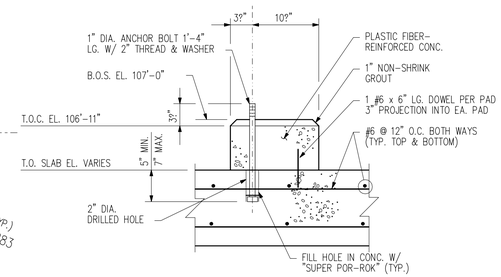

SECTION G
SCALE: 1"=1'-0" X1-60882

LAST GENERAL UPDATE: 04JAN2010

CADD

MARK	LOCATION	DATE	REVISIONS	CHANGED	APPROVED	DATE
H						
J						
K						
L						
M						
N						
P						

MARK	LOCATION	DATE	REVISIONS	CHANGED	APPROVED	DATE
A	C-2	09-26-89	AS BUILT	D.A.W.	K.J.W.	09-26-89
B	A-2	27FEB04	ADDED PIPE POLE FOUNDATION	RFP	ABK	09-26-89
C						
D						
E						
F						
G						

DESIGNED K.J.WALKER	DATE 01-11-88	DOW CORNING CORPORATION
DRAWN L.K.O./ D.A.W.	DATE 01-29-88	WASTE CONTROL BLDG. 806
CHECKED K.J.WALKER	DATE 06-08-88	TANK FARM SLAB AND FOUNDATION DETAILS
APPROVED R.L.ZITTA	DATE 06-10-88	SCALE INCH FOOT AS NOTED · DRAWING NUMBER X1-60883 · REVISION B

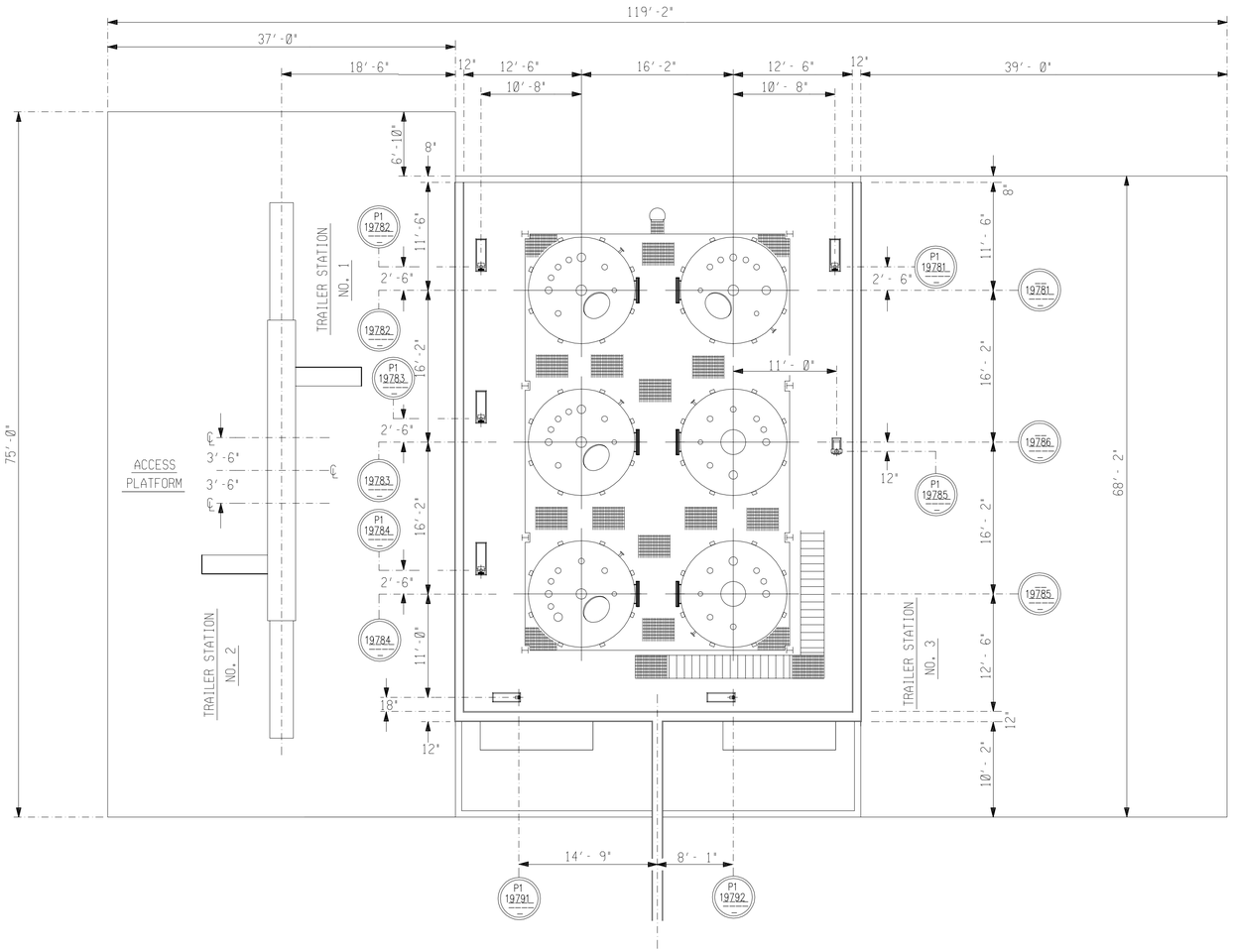

PLAN VIEW TANK FARM 806 BLDG.

SCALE: 1 / 8"=1'-0"

LAST GENERAL UPDATE: 04JAN2010

CADD

MARK	LOCATION	DATE	REVISIONS	CHANGED	APPROVED	DATE
H						
J						
K						
L						
M						
N						
P						

MARK	LOCATION	DATE	REVISIONS	CHANGED	APPROVED	DATE
A						
B						
C						
D						
E						
F						
G						

DESIGNED	J. MOQUIN	DATE	04-13-88
DRAWN	DEBOLT DESIGN	DATE	05-15-88
CHECKED	S.K. SAHA	DATE	05-15-88
APPROVED	S.K. SAHA	DATE	05-15-88

DOW CORNING CORPORATION

MIDLAND PLT — BLDG 806

TANK FARM
EQUIPMENT LOCATION PLAN

SCALE	INCH	FOOT	DRAWING NUMBER	REVISION
	1	8" = 1'-0"	W1-71228	0

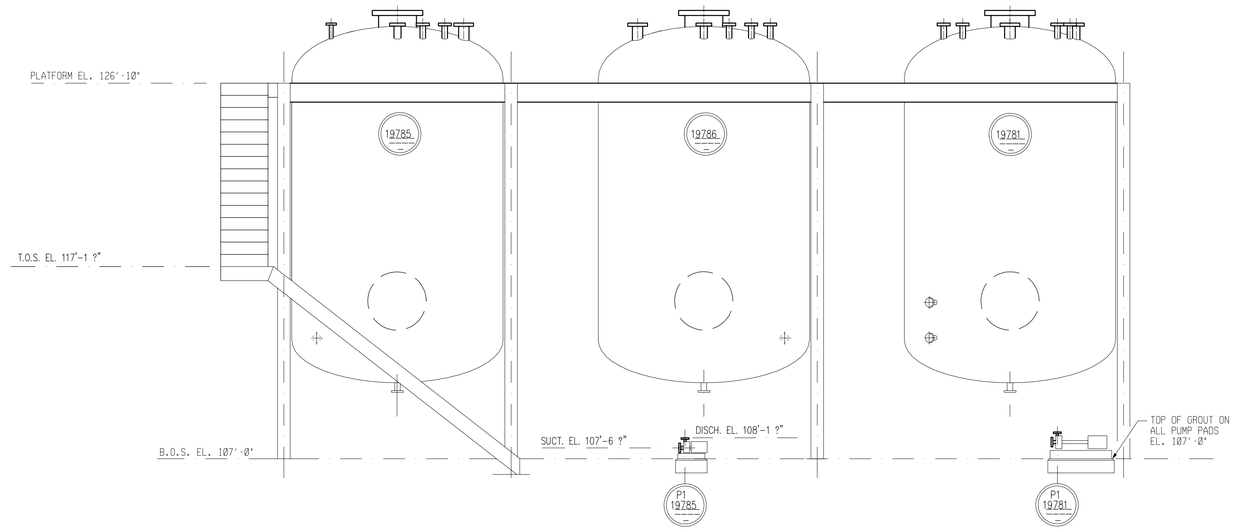

ELEVATION LOOKING WEST

SCALE: 1 / 4"=1'-0"

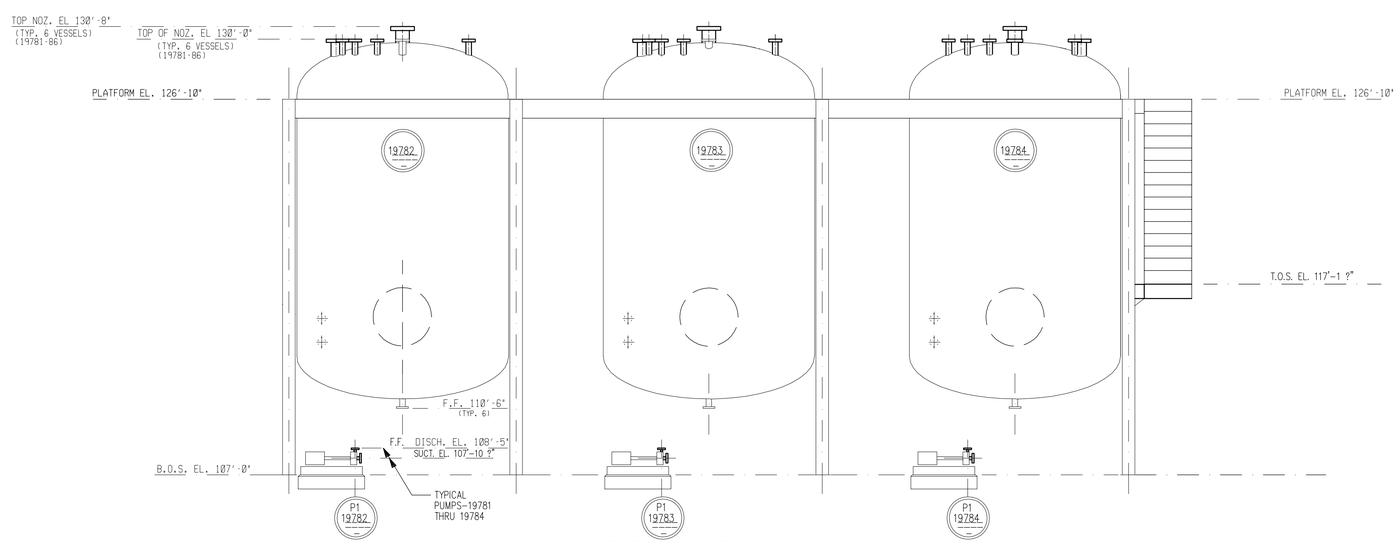

ELEVATION LOOKING EAST

SCALE: 1 / 4"=1'-0"

LAST GENERAL UPDATE: 04JAN2010

MARK	LOCATION	DATE	REVISIONS	CHANGED	APPROVED	DATE
H						
J						
K						
L						
M						
N						
P						

MARK	LOCATION	DATE	REVISIONS	CHANGED	APPROVED	DATE
A	D-1	8-8-88	CHANGED SUCT.& DISCH.ELEV.ON PUMPS P1-19781 THRU P1-19784	J.MOQUIN	SKS	8-8-88
B						
C						
D						
E						
F						
G						

DESIGNED J. MOQUIN	DATE 04-13-88	DOW CORNING CORPORATION
DRAWN DEBOLT DESIGN	DATE 05-03-88	MIDLAND PLT. BLDG 806
CHECKED S.K. SAHA	DATE 05-15-88	TANK FARM EQUIPMENT - EAST & WEST ELEVATION
APPROVED S.K. SAHA	DATE 05-15-88	

SCALE	INCH	FOOT	DRAWING NUMBER	REVISION
	1	4"=1'-0"	W1-71229	A

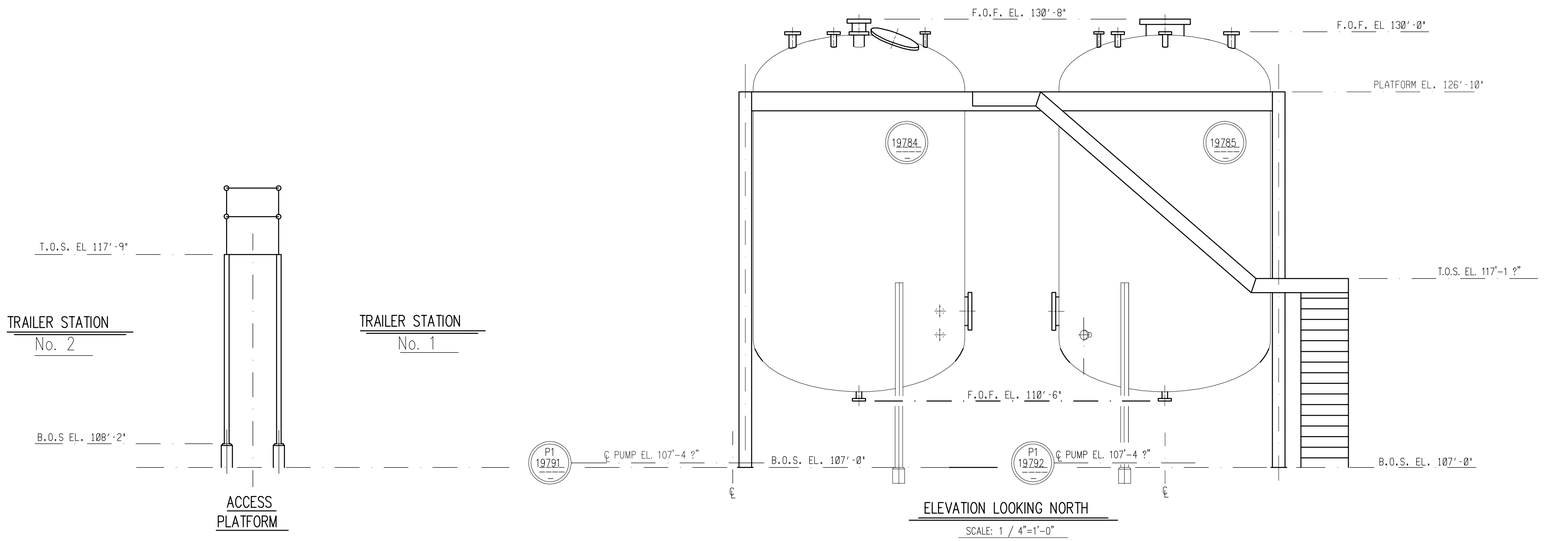

ELEVATION LOOKING NORTH

SCALE: 1 / 4"=1'-0"

LAST GENERAL UPDATE: 04JAN2010

CADD

MARK	LOCATION	DATE	REVISIONS	CHANGED	APPROVED	DATE
H						
J						
K						
L						
M						
N						
P						

MARK	LOCATION	DATE	REVISIONS	CHANGED	APPROVED	DATE
A						
B						
C						
D						
E						
F						
G						

DESIGNED	J. MOQUIN	DATE 03-29-88
DRAWN	DEBOLT DESIGN	DATE 05-15-88
CHECKED	S.K. SAHA	DATE 05-15-88
APPROVED	S.K. SAHA	DATE 05-15-88

DOW CORNING CORPORATION

MIDLAND PLT — BLDG 806

TANK FARM

EQUIPMENT - SOUTH ELEVATION

SCALE	INCH	FOOT	DRAWING NUMBER	REVISION
	1	4'-1'-0"	W1-71230	0

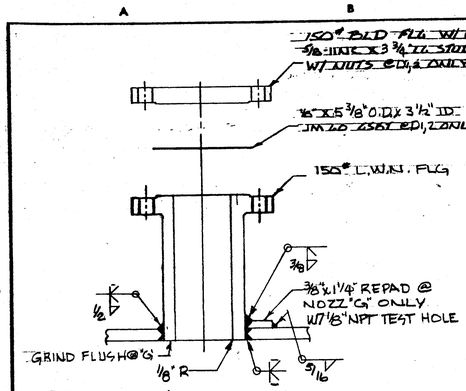

DETAIL: NOZZLES 3"

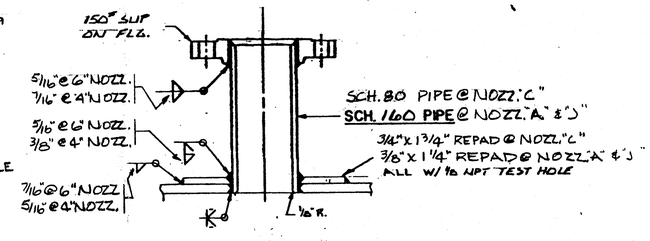

DETAIL NOZZLES 'A', 'C' & 'J'

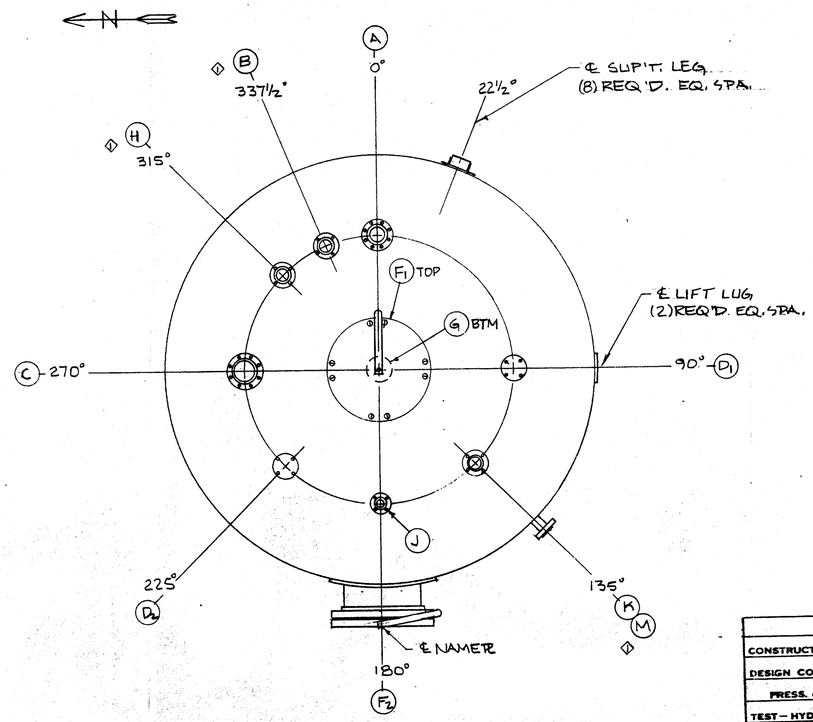

ORIENTATION

SPARE PARTS LIST

(2) 1/8" x 28 1/4" O.D. x 24" I.D. GASKET

(2) 1/8" x 5 3/8" O.D. x 3 1/2" I.D. GASKET

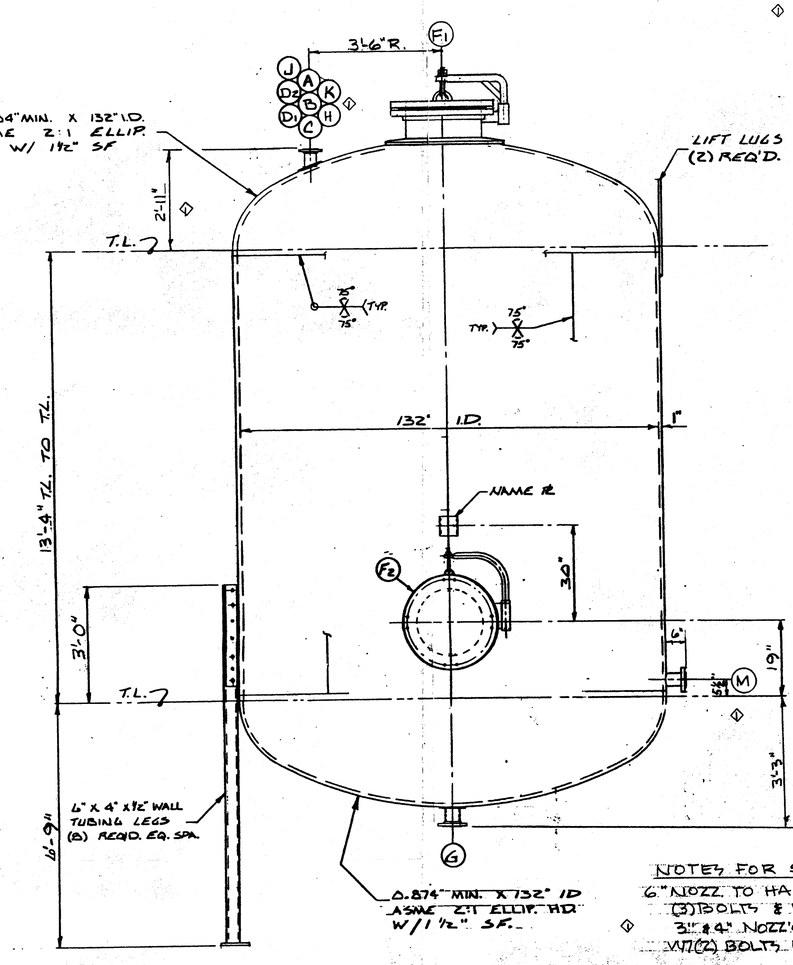

NOTES FOR SHIPPING COVERS

6" NOZZ. TO HAVE 1/4" ℞ SHIPPING COVER W/ (3) BOLTS & RUBBER GASKETS

3" & 4" NOZZ'S. TO HAVE 150# BLD. FLG'S. W/ (2) BOLTS EA. & RUBBER GASKETS

ELEVATION

CERTIFIED FOR CONSTRUCTION
SUPERIOR WELDING COMPANY
DATE- 5-20-88
APPVD- RB

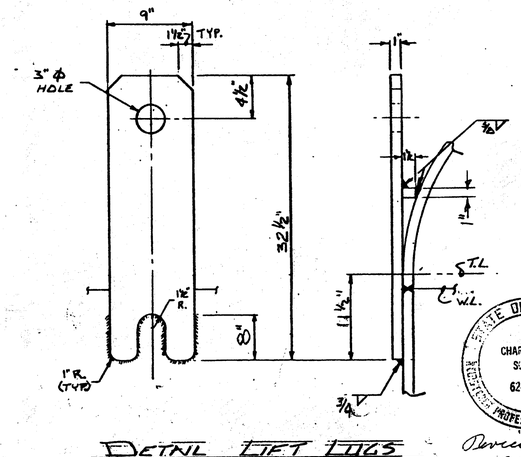

DETAIL LIFT LUGS

(2) REQ'D. EQ. SPA.

STATE OF ILLINOIS
CHARLES C. SUNGER
62-16970
REGISTERED PROFESSIONAL ENGINEER

Reviewed 6/23/89 CC Sunger

FITTING SCHEDULE

MK	NO. REQ'D	DESCRIPTION	REMARKS
A	1	4"-150# NOZZ. SO	INLET
B	1	3"-150# NOZZ. LWN.	RECIRC.
C	1	6"-150# NOZZ. SO	RELIEF
D1	1	3"-150# NOZZ. LWN.	SPARE W/ BLIND
E			
F1/2	2	24" 150# NOZZ SO	MANWAY
G	1	3"-150# NOZZ LWN.	OUTLET
H	1	3"-150# NOZZ LWN.	LEVEL SWITCH
D2	1	3"-150# NOZZ LWN.	SPARE W/ BLIND
K	1	3"-150# NOZZ LWN.	LEVEL INST.
J	1	4"-150# NOZZ SO.	N2 BLANKET
M	1	3" 150# NOZZ. LWN.	LEVEL SWITCH

WELD NOTES

CS-TO	CS	MG-1D	R-70 WIRE
"	"	MIG	E 70 1B STICK
"	"	SA1-70	L-50 WIRE 860 FLUX

NOZZLE FLANGE DIMENSIONS TO CONFORM TO 150# ANSI SLIP ON FLG STDS. BOLT HOLES TO STRADDLE ℄'s PARALLEL TO PRINCIPAL VESSEL ℄'s

VESSEL SPECIFICATIONS

CONSTRUCTION: CODE- ASME SECT. VIII DIV. I 1986 EDIT. 12-31-86 A30

DESIGN CONDITIONS: SHELL | JACKET, COIL OR TUBE

PRESS. & TEMP. F.V. & 150 PSIG @ -20° TO 520°F

TEST – HYDROSTATIC HORIZ. @ 245 PSIG

MATERIAL

SHELL: SA-516-70

HEADS: SA-516-70

JACKET SHELL:

JACKET HEADS:

SHELL NOZZLES: NECKS SA-106-B | FLANGES SA-105

JACKET NOZZLES: NECKS | FLANGES

COILS:

BOLTING: SA-193-B7 W/ SA-194-2H NUTS SHIPPING: CS

RE-PADS: SA-516-70 | LIFT LUGS: SA-516-70

GASKETS: JM-60 SHIPPING GSKTS.: RUBBER

SUPPORTS: SA-36

CODE INSPECTION & STAMP: ASME BY LUMBERMENS MUTUAL CASUALTY CO.

INSPECTION-OTHER- BY CUSTOMER

RADIOGRAPH: HEAD TO SHELL REF. UW-11(a)(5)(b) SPOT X-RAY | THERMAL TREATMENT NOT REQ'D.

CORR. ALLOW: TOP HD & SHELL: 0.125" BTM HD.: 0.25" | SANDBLAST: NOT REQ'D.

PAINT: NOT REQ'D.

WORKING VOLUME: 10000 GAL.

WEIGHT: EMPTY = 34549 LBS FULL OF H_2O = 1355.07 LBS. VOL = 12115 GAL.

REFERENCE DWG. & SPECS: DOW CORNING DATA SHTS. M800-V007 SHT 182 SPEC. NO. 214-9 REV. 1, SK. NO. M800-19875 & 6

REFERENCE ORDER: 132610

ITEM: # 19785

PROJECT 107021

REF DWG L88-0054-C | NO. REQ'D. (1)

NO.	REVISIONS	DATE
1	REV. PER APP'L. 5/12/88 CERT. FOR CONST.	5-11-88

SUPERIOR WELDING COMPANY
DECATUR, ILLINOIS

JOB NO. 05-88-0054-01
DWG. L88-0054-A

DOW CORNING CORPORATION

MIDLAND PLANT 806 TANK FARM

WASTE IPA/SILOXANE STORAGE TANK

SCALE | INCH | FOOT | DRAWING NUMBER 17485 | REVISION 1

MARK	LOCATION	DATE	REVISIONS	CHANGED BY	APPROVED BY	DATE
1	REV. PER APP'L. DWG. 5/11/88 CERT. FOR CONST.	5-11-88				

DESIGNED BY | DATE
DRAWN BY | DATE
CHECKED BY | DATE
APPROVED BY | DATE

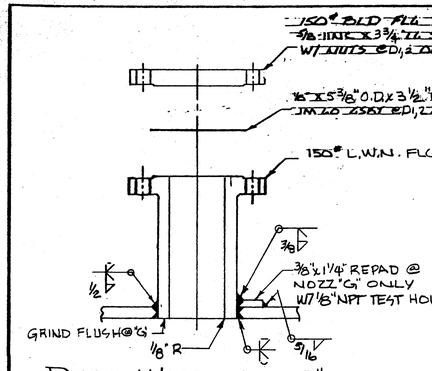

DETAIL: NOZZLES 3"

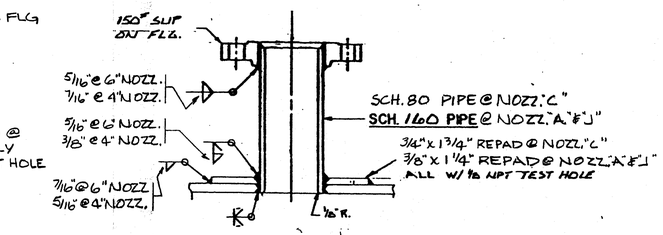

DETAIL NOZZLES 'A', 'C' & 'J'

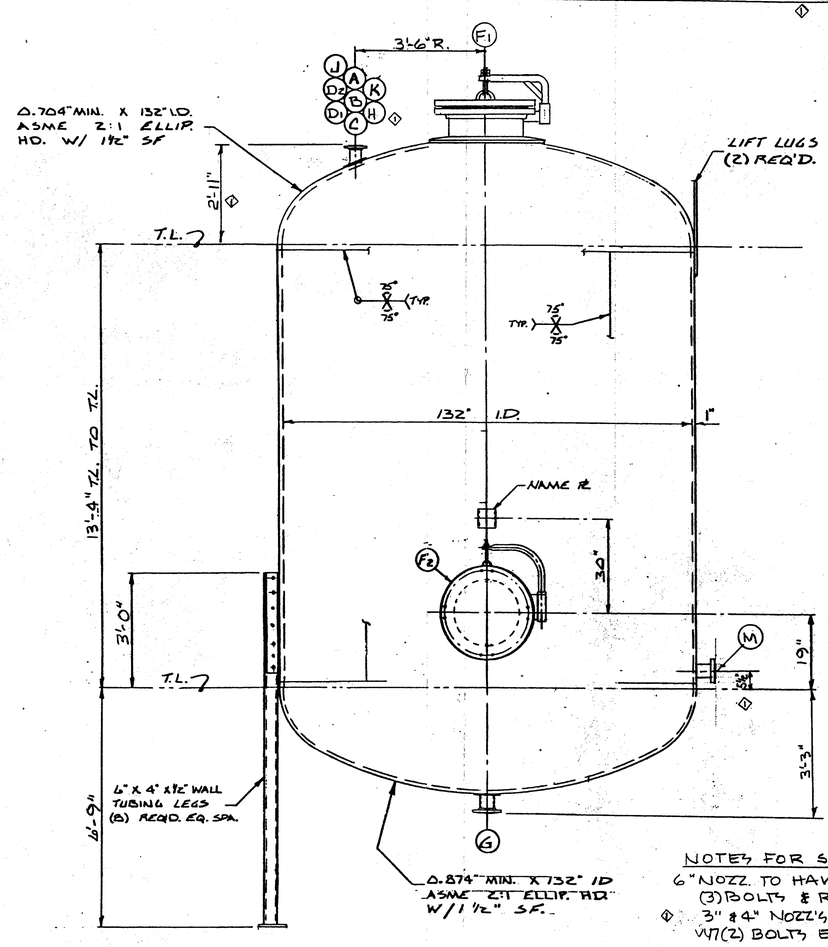

ELEVATION

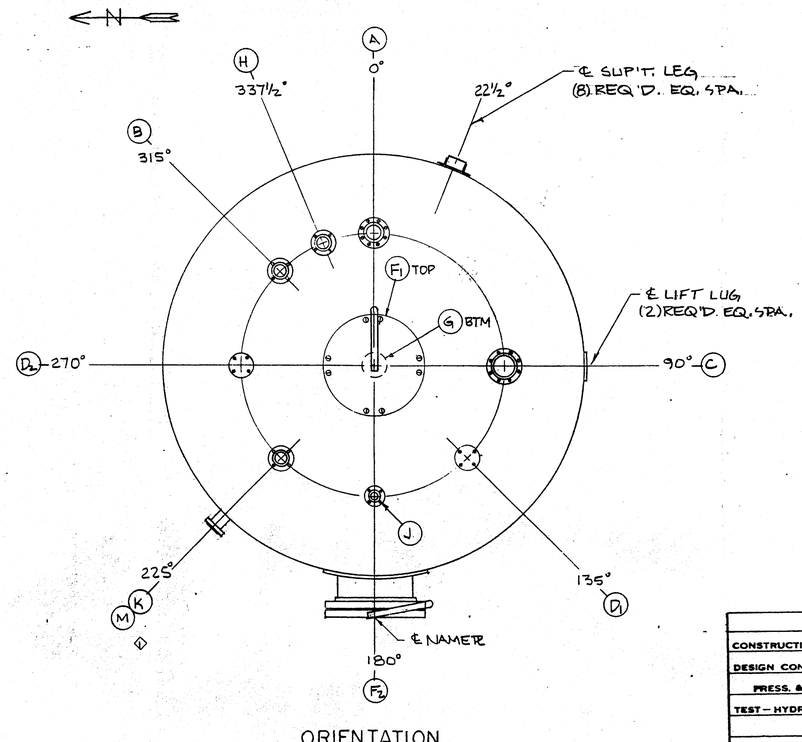

ORIENTATION

SPARE PARTS LIST

(2) 1/8" X 28 1/4" O.D. X 24" I.D. GASKET

(2) 1/8" X 5 3/8" O.D. X 3 1/2" I.D. GASKET

CERTIFIED FOR CONSTRUCTION
SUPERIOR WELDING COMPANY
DATE - 5-20-88
APPVD. RB

NOTES FOR SHIPPING COVERS

6" NOZZ. TO HAVE 1/4" PL SHIPPING COVER W/ (3) BOLTS & RUBBER GASKETS

3" & 4" NOZZ'S, TO HAVE 150# BLD. FLG'S. W/ (2) BOLTS EA. & RUBBER GASKETS

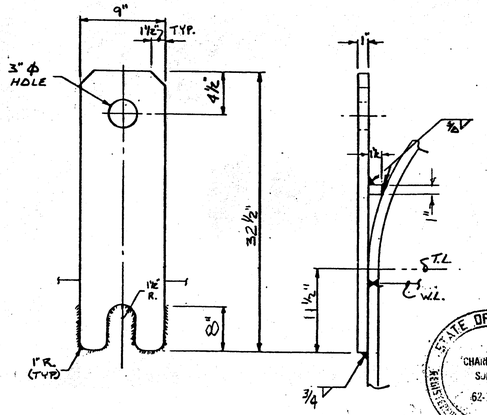

DETAIL LIFT LUGS

(2) REQ'D. EQ. SPA.

STATE OF ILLINOIS
CHARLES C. SUNGER
62-16970
REGISTERED PROFESSIONAL ENGINEER

Reviewed 6/23/88
C.C. Sunger

FITTING SCHEDULE

MK	NO. REQ'D	DESCRIPTION	REMARKS
A	1	4"-150# NOZZ. SO	INLET
B	1	3"-150# NOZZ. LWN.	RECIRC.
C	1	6"-150# NOZZ. SO	RELIEF
D1	1	3"-150# NOZZ. LWN.	SPARE W/ BLIND
E			
F1, F2	2	24" 150# NOZZ SO	MANWAY
G	1	3"-150# NOZZ LWN.	OUTLET
H	1	3"-150# NOZZ LWN.	LEVEL SWITCH
D2	1	3"-150# NOZZ LWN.	SPARE W/ BLIND
K	1	3"-150# NOZZ LWN.	LEVEL INST.
J	1	4"-150# NOZZ S.O.	N2 BLANKET
M	1	3" 150# NOZZ. LWN.	LEVEL SWITCH

WELD NOTES

CS-TO	CS	MG-1D	R-70 WIRE
"	"	M1B	E 7018 STICK
"	"	SA1-70	L-50 WIRE BLD FLUX

NOZZLE FLANGE DIMENSIONS TO CONFORM TO 150# ANSI SLIP ON FLG STDS. BOLT HOLES TO STRADDLE ℄'s PARALLEL TO PRINCIPAL VESSEL ℄'s

VESSEL SPECIFICATIONS

CONSTRUCTION: CODE - ASME SECT. VIII DIV. I 1986 EDIT. 12-31-86 ADD

DESIGN CONDITIONS: SHELL | JACKET, COIL OR TUBE

PRESS. & TEMP. F.V. & 150 PSIG @ -20°F TO 520°F

TEST - HYDROSTATIC HORIZ. @ 245 PSIG

MATERIAL

SHELL: SA-516-70

HEADS: SA-516-70

JACKET SHELL:

JACKET HEADS:

SHELL NOZZLES: NECKS SA-106-B | FLANGES SA-105

JACKET NOZZLES: NECKS | FLANGES

COILS:

BOLTING: SA-193-B7 W/ SA-194-2H NUTS SHIPPING: CS

RE-PADS: SA-516-70 | LIFT LUGS: SA-516-70

GASKETS: JM-60 SHIPPING GSKTS.: RUBBER

SUPPORTS: SA-36

CODE INSPECTION & STAMP: ASME BY LUMBERMENS MUTUAL CASUALTY CO.

INSPECTION-OTHER- BY CUSTOMER

HEAD TO SHELL: DS3 UW-11(a)(5)(b)

RADIOGRAPH: SPOT X-RAY THERMAL TREATMENT NOT REQ'D.

CORR. ALLOW: TOP HD & SHELL: 0.125" BTM HD.: 0.25" SANDBLAST: NOT REQ'D.

PAINT: NOT REQ'D.

WORKING VOLUME: 10000 GAL.

WEIGHT: EMPTY = 34549 LBS FULL OF H_2O = 135507 LBS. VOL = 12115 GAL

REFERENCE DWG. & SPECS: DOW CORNING DATA SHTS. M800-V002 SHT. 1 & 2 SPEC. NO. 2149 REV. 1, SK. NO. M800 198758 6

REFERENCE ORDER: 132610

ITEM: # 19786

PROJECT 107021

REF DWG L88-0054-C NO. REQ'D. (1)

NO.	REVISIONS	DATE
1	REV. PER APPL 5/2/88 CERT. FOR CONST.	5-11-88

SUPERIOR WELDING COMPANY
DECATUR, ILLINOIS

JOB NO 05-88-0054-02

DWG. L88-0054-B

REV. 0

DOW CORNING CORPORATION

MIDLAND PLANT 806 TANK FARM

WASTE IPA/SILOXANE STORAGE TANK

SCALE | INCH | FOOT | DRAWING NUMBER WI-71486 | REVISION 0

MARK	LOCATION	DATE	REVISIONS	CHANGED BY	APPROVED BY	DATE	MARK	LOCATION	DATE	REVISIONS	CHANGED BY	APPROVED BY	DATE

DESIGNED BY DATE
DRAWN BY DATE
CHECKED BY DATE
APPROVED BY DATE

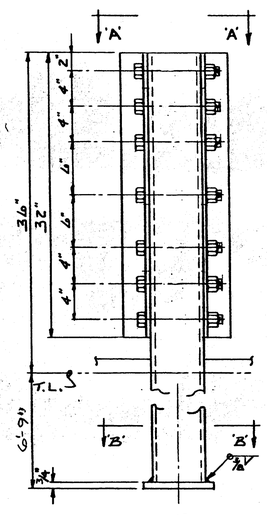

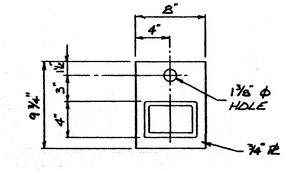

VIEW "B-B"

DETAIL SUP'T. LEGS
(8) REQ'D. EQ. SPA.

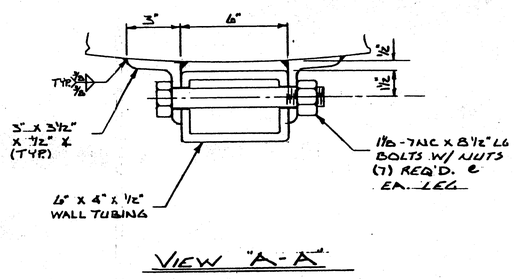

VIEW "A-A"

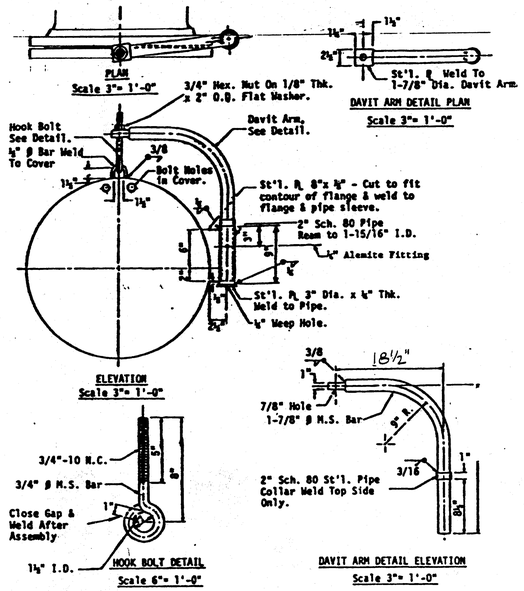

DETAIL NOZZLE 'F2' DAVIT

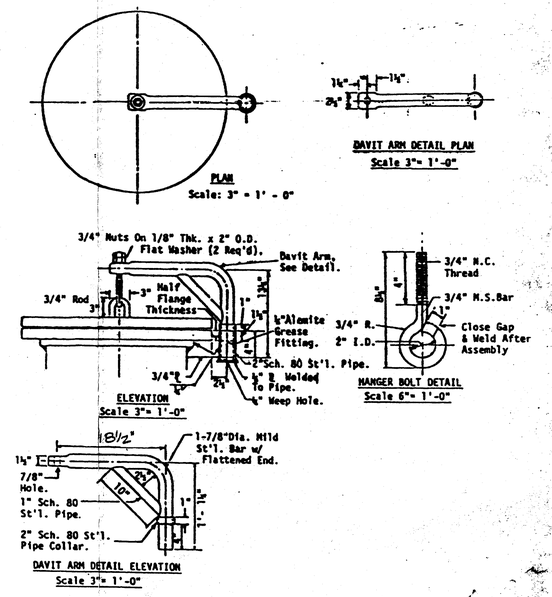

DETAIL NOZZLE 'F1' DAVIT

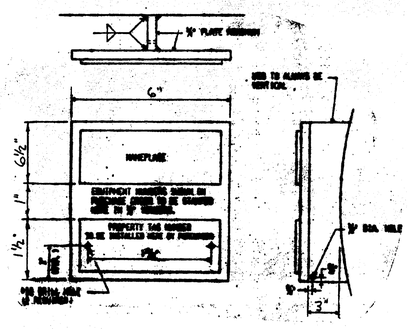

DETAIL: NAME PL BRKT.

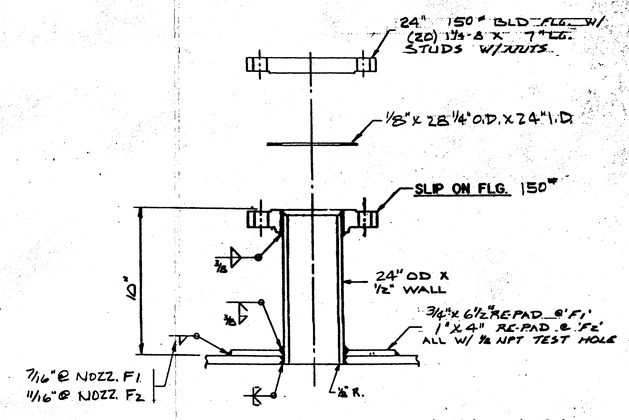

DETAIL NOZZLES 'F1' & 'F2'

STATE OF ILLI
CHARLES C. SONGER
62-16970
REGISTERED PROFESSIONAL E

Reviewed 6/23/88
C C Songer

CERTIFIED FOR CONSTRUCTION
SUPERIOR WELDING COMPANY
DATE - 5-20-88
APPVD - RB

REF. DWG'S, L88-0054-A & B
PROJECT # 107.021
ITEM # 19785 & 19786
P.O. # 132610

SUPERIOR WELDING COMPANY
Dwg. No. L88-0054-C

DOW CORNING CORPORATION
MIDLAND PLANT - 806 TANK FARM
WASTE IPA/SILOXANE STORAGE TANK
ADDITIONAL DETAILS

MARK	LOCATION	DATE	REVISIONS	CHANGED BY	APPROVED BY	DATE

MARK	LOCATION	DATE	REVISIONS	CHANGED BY	APPROVED BY	DATE

REV. PER APP'L. 5-2-88 CERT. FOR CONST.	5-11-88
DESIGNED BY	DATE
DRAWN BY	DATE
CHECKED BY	DATE
APPROVED BY	DATE

SCALE | INCH | FOOT | DRAWING NUMBER | REVISION
W1-71487

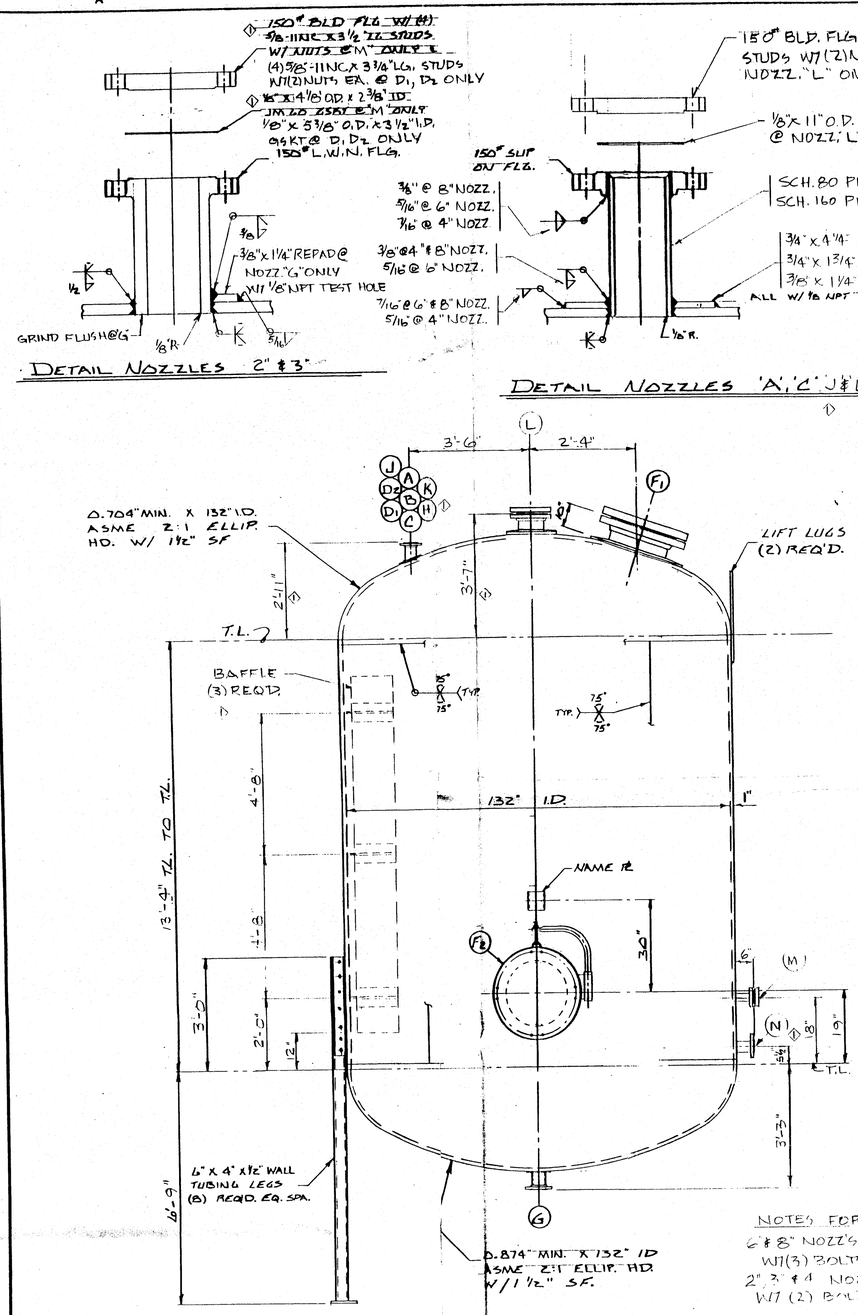

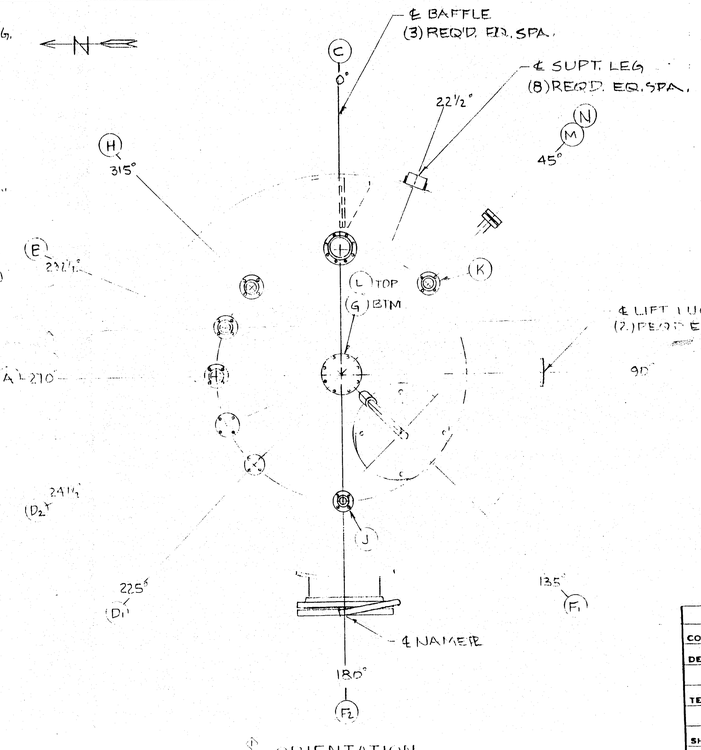

FITTING SCHEDULE

MK	NO. REQ'D	DESCRIPTION	REMARKS
A	1	4"-150# NOZZ. SO	INLET
B	1	3"-150# NOZZ. L.W.N.	RECIRC.
C	1	6"-150# NOZZ. SO	RELIEF
D1	1	3"-150# NOZZ. L.W.N.	SPARE W/ BLIND
E			
F1/2	2	24" 150# NOZZ SO	MANWAY
G	1	3" 150# NOZZ L.W.N.	OUTLET
H	1	3" 150# NOZZ L.W.N.	LEVEL SWITCH
D2	1	3"-150# NOZZ L.W.N.	SPARE W/ BLIND
K	1	3"-150# NOZZ L.W.N.	LEVEL INST.
J	1	4"-150# NOZZ SO	N2 BLANKET

WELD NOTES

CS-TO CS	MG-1D	R-70 WIRE
" "	MIG	E 70IB STICK
" "	SA1-70	L-50 WIRE B60 FLUX

—	1	@ 15" NOZZ. SO	AGITATOR W/ BLIND
A	1	2" 150# NOZZ. L.W.N.	SPARE W/ BLIND
H	1	3" 150# NOZZ L.W.N.	LEVEL SWITCH

NOZZLE FLANGE DIMENSIONS TO CONFORM TO 150# ANSI SLIP ON FLG STDS. BOLT HOLES TO STRADDLE ℄'s PARALLEL TO PRINCIPAL VESSEL ℄'s

VESSEL SPECIFICATIONS

CONSTRUCTION: CODE – ASME SECT. VIII DIV. I 1986 EDIT. 12-31-86 ADD

DESIGN CONDITIONS: SHELL | JACKET, COIL OR TUBE

PRESS. & TEMP. F.V. & 150 PSIG @ -20°F TO 520°F

TEST – HYDROSTATIC HORIZ. @ 245 PSIG

MATERIAL

SHELL: SA-516-70

HEADS: SA-516-70

JACKET SHELL:

JACKET HEADS:

SHELL NOZZLES: NECKS SA-106-B | FLANGES SA-105

JACKET NOZZLES: NECKS | FLANGES

COILS:

BOLTING: SA-193-B7 W/ SA-194-2H NUTS SHIPPING: CS

RE-PADS: SA-516-70 | LIFT LUGS: SA-516-70

GASKETS: JM-60 SHIPPING GSKTS.: RUBBER

SUPPORTS: SA-36

CODE INSPECTION & STAMP: ASME BY LUMBERMENS MUTUAL CASUALTY CO.

INSPECTION – OTHER – BY CUSTOMER

RADIOGRAPH: HEAD & SHELL: PER UW-11(a)(5)(b) SPOT X-RAY THERMAL TREATMENT NOT REQ'D.

CORR. ALLOW: TOP HD & SHELL: 0.125" BTM. HD.: 0.25" SANDBLAST: NOT REQ'D.

PAINT: NOT REQ'D.

WORKING VOLUME: 10000 GAL.

WEIGHT: EMPTY = 36016 LBS FULL OF H_2O = 137034 LBS VOL = 12115 GAL

REFERENCE DWG. & SPECS.: DOW CORNING DATA SHTS. M800-V001 SHT 1 & 2

SPEC. 2149 REV. 1 SK. NO. M800-19781 THRU 4

REFERENCE ORDER: 132610

ITEM: # 19781

PROJECT 10721

REF DWG L88-0055-E NO. REQ'D. (1)

NO.	REVISIONS	DATE
1	REV. PER REF. 5/2/88 CERT. FOR CONST.	5-11-88

SUPERIOR WELDING COMPANY
DECATUR, ILLINOIS

REV. 1

JOB NO. 05-88-0055-01

DWG. L88-0055-A

CERTIFIED FOR CONSTRUCTION
SUPERIOR WELDING COMPANY
DATE - 5-20-88
APPVD - RB

STAFF PARTS LIST
(2) 1/8" x 28 1/4" OD x 24" I.D. GASKET
(2) 1/8" x 5 3/8" OD x 3 1/2" I.D. GASKET
(1) 1/8" x 11" O.D. x 8 5/8" I.D. GASKET
(1) 1/8" x 4 1/8" OD x 2 3/8" I.D. GASKET

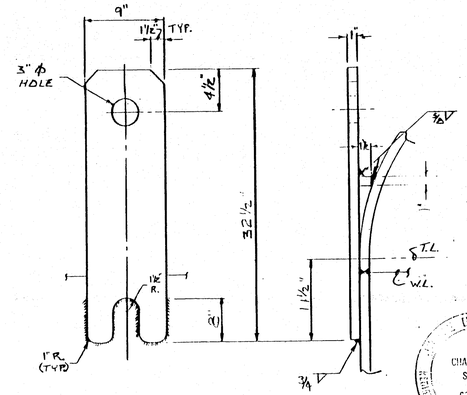

NOTES FOR SHIPPING COVER:
6" & 8" NOZZ'S TO HAVE 1/4" PL SHIPPING COVER'S W/ (3) BOLTS EA. & RUBBER GASKETS.
2", 3" & 4" NOZZ'S TO HAVE 1/8" BLD FLG'S W/ (2) BOLTS EA. & FLAT GASKETS.

MARK	LOCATION	DATE	REVISIONS	CHANGED BY	APPROVED BY	DATE

DESIGNED BY | DATE
DRAWN BY | DATE
CHECKED BY | DATE
APPROVED BY | DATE

DOW CORNING CORPORATION
MIDLAND PLANT, 806 TANK FARM
WASTE SOLVENT STORAGE TANK

SCALE	INCH	FOOT	DRAWING NUMBER	REVISION
			WI-71488	0

03/24/99

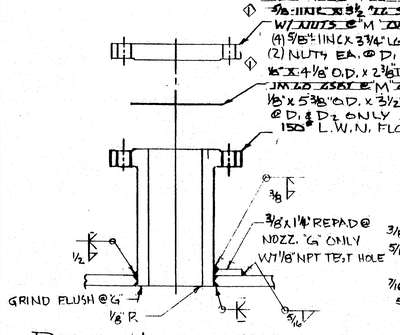

DETAIL NOZZLES 2" & 3"

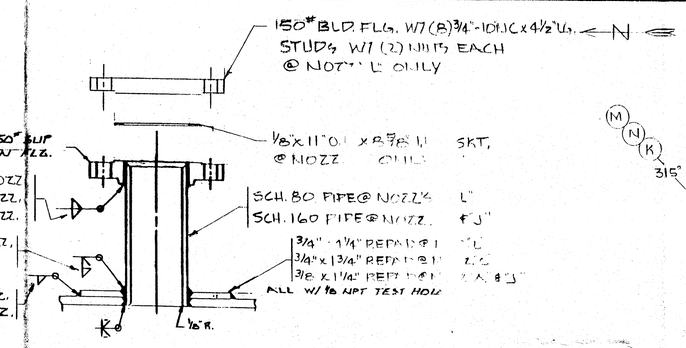

DETAIL NOZZLES "A", "C", "J" & "L"

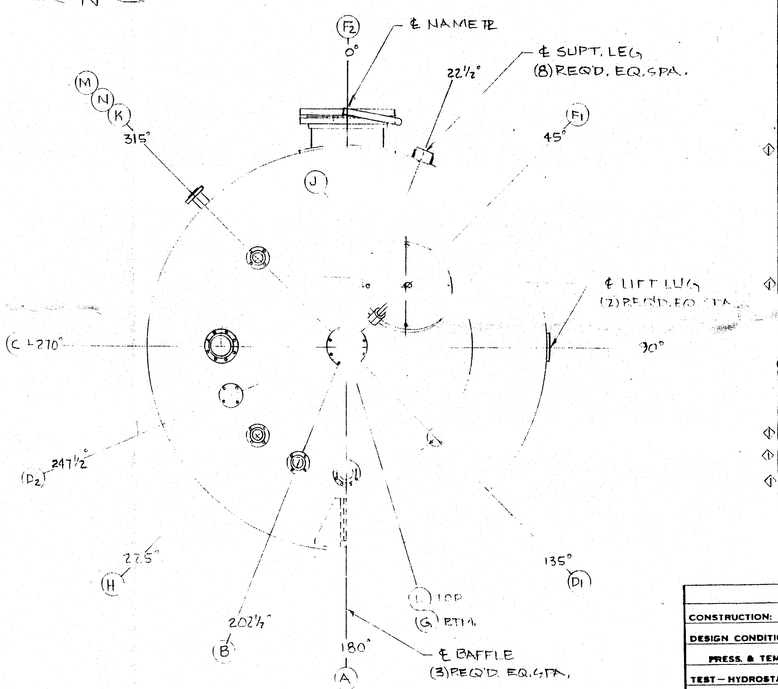

ORIENTATION

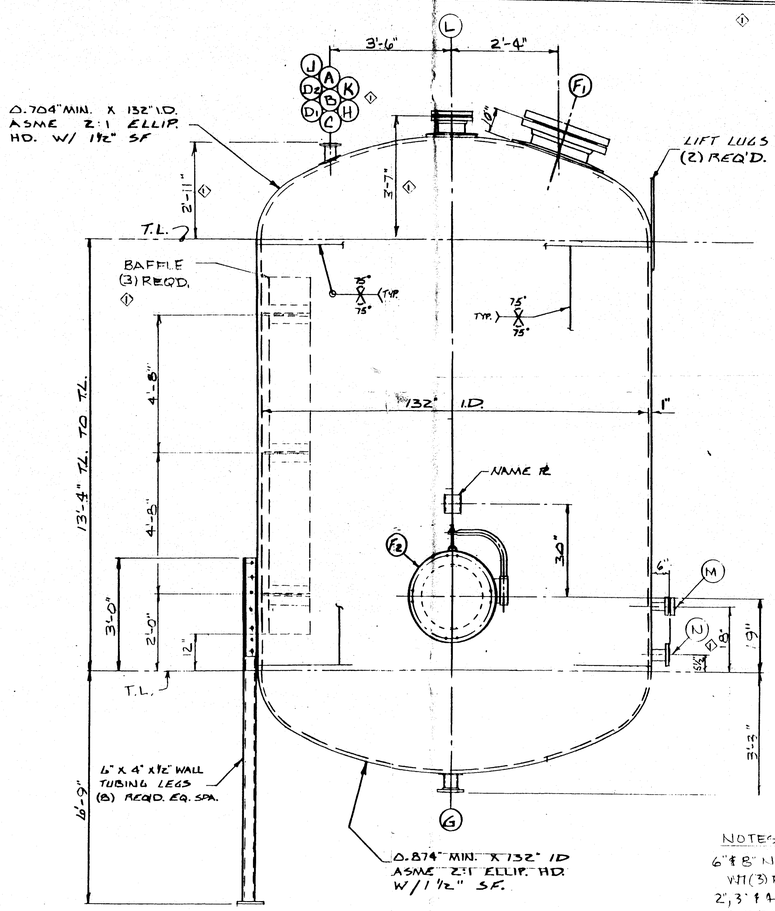

ELEVATION

SPARE PARTS LIST
(2) 1/8" X 28 1/4" O.D. X 24" I.D. GASKET
(1) 1/8" X 4 1/8" O.D. X 2 7/8" I.D. GASKET
(2) 1/8" X 5 3/8" O.D. X 3 1/2" I.D. GASKET
(1) 1/8" X 11" O.D. X 8 5/8" I.D. GASKET

CERTIFIED FOR CONSTRUCTION
SUPERIOR WELDING COMPANY
DATE- 5-20-88
APPVD- R.B.

NOTES FOR SHIPPING COVERS
6" & 8" NOZZ'S TO HAVE 1/4" PL SHIPPING COVERS W/ (3) BOLTS EA. & RUBBER GASKETS
2", 3" & 4" NOZZ'S TO HAVE 150# PLD. FLG'S, W/ (2) BOLTS EA. & RUBBER GASKETS

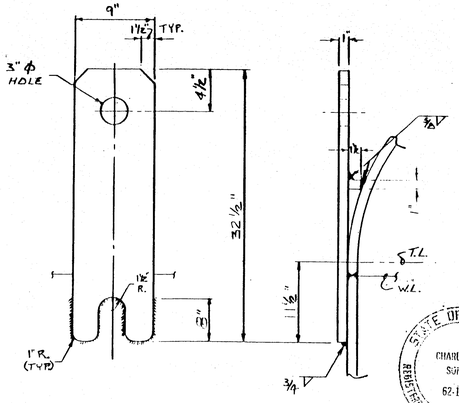

DETAIL LIFT LUGS
(2) REQ'D. EQ. SPA.

STATE OF ILLINOIS
CHARLES C. SURGER
62-16970
REGISTERED PROFESSIONAL ENGINEER

FITTING SCHEDULE

MK	NO. REQ'D	DESCRIPTION	REMARKS
A	1	4"-150# NOZZ. SO	INLET
B	1	3"-150# NOZZ. L.W.N.	RECIRC.
C	1	6"-150# NOZZ. SO	RELIEF
D1	1	3"-150# NOZZ. L.W.N.	SPARE W/ BLIND
E			
F1/2	2	24" 150# NOZZ SO	MANWAY
G	1	3"-150# NOZZ L.W.N.	OUTLET
H	1	3"-150# NOZZ L.W.N.	LEVEL SWITCH
D2	1	3"-150# NOZZ L.W.N.	SPARE W/ BLIND
K	1	3"-150# NOZZ L.W.N.	LEVEL IND.
J	1	4"-150# NOZZ S.O.	W/ BLANKET

WELD NOTES

CS-TO CS	MIG-ID	R-70 WIRE
" "	MIG	E 7018 STICK
" "	SA1-70	L-50 WIRE BLD FLUX

L	1	8" 150# NOZZ. S.O.	AGITATOR W/ BLIND
M	1	2" 150# NOZZ. L.W.N.	SPARE W/ BLIND
N	1	3" 150# NOZZ. L.W.N.	LEVEL SWITCH

NOZZLE FLANGE DIMENSIONS TO CONFORM TO 150# ANSI SLIP ON FLG STDS. BOLT HOLES TO STRADDLE ℄'s PARALLEL TO PRINCIPAL VESSEL ℄'s

VESSEL SPECIFICATIONS

CONSTRUCTION: CODE- ASME SECT. VIII DIV. I 1986 EDIT. 12-31-86 ADD

DESIGN CONDITIONS:	SHELL	JACKET, COIL OR TUBE
PRESS. & TEMP. F.V. & 150 PSIG @ -20° TO 520°F.		
TEST-HYDROSTATIC HORIZ. @ 245 PSIG		

MATERIAL

SHELL: SA-516-70
HEADS: SA-516-70
JACKET SHELL:
JACKET HEADS:
SHELL NOZZLES: NECKS SA-106-B FLANGES SA-105
JACKET NOZZLES: NECKS FLANGES
COILS:
BOLTING: SA-193-B7 W/ SA-194-2H NUTS SHIPPING: CS
RE-PADS: SA-516-70 LIFT LUGS: SA-516-70
GASKETS: JM-60 SHIPPING GSKTS.: RUBBER
SUPPORTS: SA-36
CODE INSPECTION & STAMP: ASME BY LUMBERMENS MUTUAL CASUALTY CO.
INSPECTION-OTHER- BY CUSTOMER
RADIOGRAPH: HEADS: 20% FULL PER UW-11(a)(5)(b) SPOT X-RAY (a)(5)(a) THERMAL TREATMENT NOT REQ'D.
CORR. ALLOW: TOP HD & SHELL: 0.125" BTM. HD.: 0.25" SANDBLAST: NOT REQ'D.
PAINT: NOT REQ'D.
WORKING VOLUME: 10000 GAL.
WEIGHT: EMPTY = 36076 LBS FULL OF H_2O = 137034 LBS VOL = 12115 GAL
REFERENCE DWG. & SPECS.: DOW CORNING DATA SHTS. MB00-V001 SHT. 1 & 2
SPEC. 2149 REV. 1 SK. NO. MB00-19781 THRU 4
REFERENCE ORDER: 132610
ITEM: " 19782
PROJECT 10721
REF DWG L88-0055-E NO. REQ'D. (1)

NO.	REVISIONS	DATE
1	REV. PER APP'L DATED 5/16/88 CERT. FOR CONST.	5/17/88

SUPERIOR WELDING COMPANY
DECATUR, ILLINOIS

JOB NO. 05-88-0055-02
DWG L88-0055-B
REV. 1

DOW CORNING CORPORATION

MIDLAND PLANT 806 TANK FARM
WASTE SOLVENT STORAGE TANK

SCALE	INCH	FOOT	DRAWING NUMBER	REVISION
			WI-71489	0

MARK	LOCATION	DATE	REVISIONS	CHANGED BY	APPROVED BY	DATE

DESIGNED BY	DATE	DRAWN BY	DATE	CHECKED BY	DATE	APPROVED BY	DATE

03/24/99

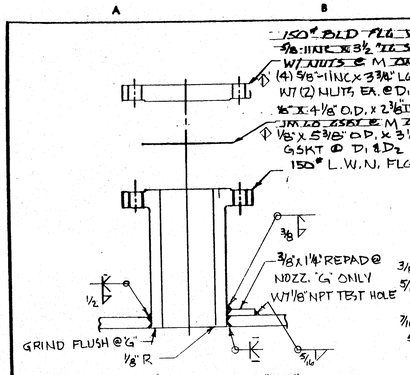

DETAIL NOZZLES 2" & 3"

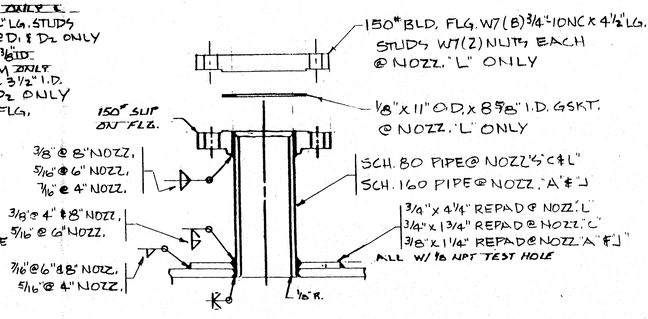

DETAIL NOZZLES "A", "C", "J" & "L"

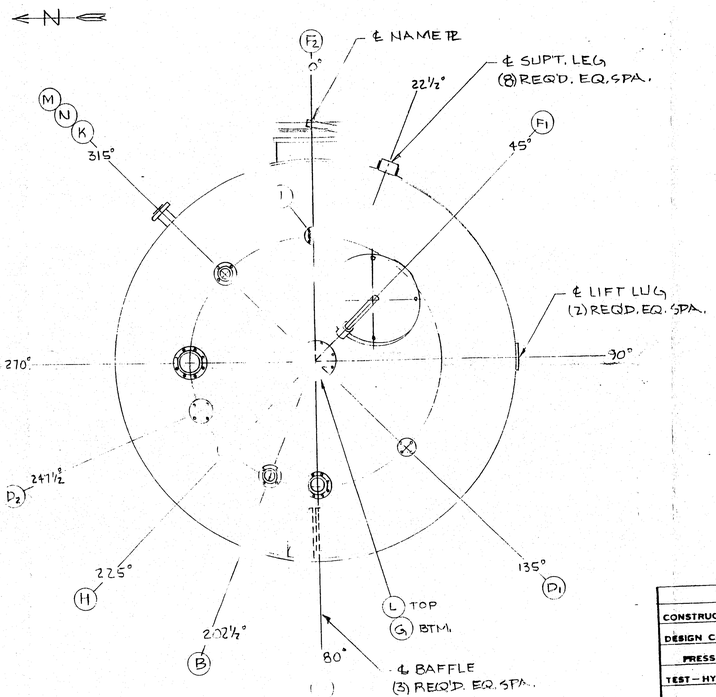

ORIENTATION

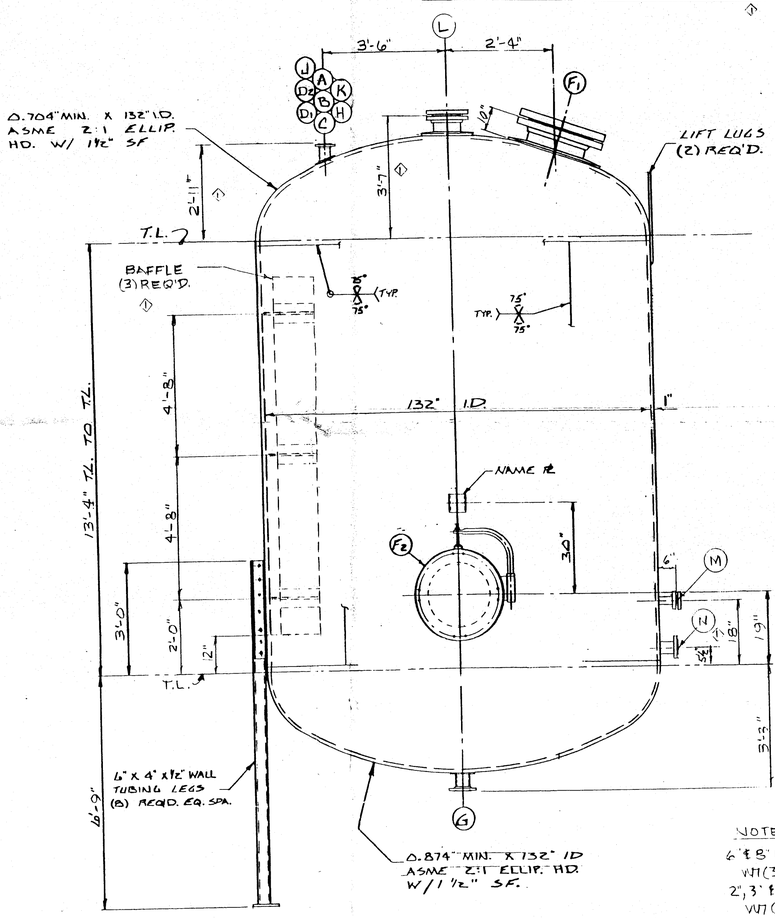

ELEVATION

SPARE PARTS LIST

(2) 1/8" x 28 1/4" O.D. x 24" I.D. GASKET
(1) 1/8" x 4 1/8" O.D. x 2 3/8" I.D. GASKET
(2) 1/8" x 5 3/8" O.D. x 3 1/2" I.D. GASKET
(1) 1/8" x 11" O.D. x 8 5/8" I.D. GASKET

CERTIFIED FOR CONSTRUCTION
SUPERIOR WELDING COMPANY
DATE - 5-20-88
APPVD - RB

NOTES FOR SHIPPING COVERS

6" & 8" NOZZS. TO HAVE 1/4" PL SHIPPING COVERS, W/ (3) BOLTS EA. & RUBBER GASKETS
2", 3" & 4" NOZZ'S. TO HAVE 150# BLD FLG'S, W/ (2) BOLTS EA. & RUBBER GASKETS

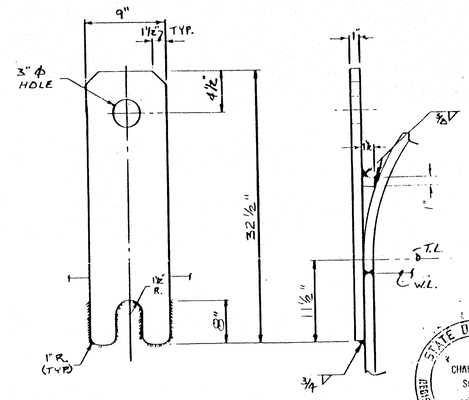

DETAIL LIFT LUGS
(2) REQ'D. EQ. SPA.

STATE OF ILLINOIS
CHARLES C. SUNGER
62-16970
REGISTERED PROFESSIONAL ENGINEER
Revised 6/23/88
C.C. Sunger

FITTING SCHEDULE

MK	NO. REQ'D	DESCRIPTION	REMARKS
A	1	4"-150# NOZZ. SO	INLET
B	1	3"-150# NOZZ. L.W.N.	RECIRC.
C	1	6"-150# NOZZ. SO	RELIEF
D1	1	3"-150# NOZZ. L.W.N.	SPARE W/ BLIND
E			
F2	2	24" 150# NOZZ SO	MANWAY
G	1	3"-150# NOZZ L.W.N.	OUTLET
H	1	3"-150# NOZZ L.W.N.	LEVEL SWITCH
D2	1	3"-150# NOZZ L.W.N.	SPARE W/ BLIND
K	1	3"-150# NOZZ L.W.N.	LEVEL INST.
J	1	4"-150# NOZZ S.O.	N2 BLANKET

WELD NOTES

CS-TO CS	MG-1D	R-70 WIRE	
" "	MIG	E 70IB STICK	
" "	SA1-70	L-50 WIRE BGO FLUX	

L	1	8" 150# NOZZ. S.O.	AGITATOR W/ BLIND
M	1	2" 150# NOZZ. L.W.N.	SPARE W/ BLIND
N	1	3" 150# NOZZ. L.W.N.	LEVEL SWITCH

NOZZLE FLANGE DIMENSIONS TO CONFORM TO 150# ANSI SLIP ON FLG STDS. BOLT HOLES TO STRADDLE ℄'s PARALLEL TO PRINCIPAL VESSEL ℄'s

VESSEL SPECIFICATIONS

CONSTRUCTION: CODE - ASME SECT. VIII DIV. I 1986 EDIT. 12-31-86 ADD

DESIGN CONDITIONS:	SHELL	JACKET, COIL OR TUBE
PRESS. & TEMP.	F.V. & 150 PSIG @ -20° TO 520°F.	
TEST - HYDROSTATIC	NORIZ. @ 245 PSIG	

MATERIAL

SHELL: SA-516-70
HEADS: SA-516-70
JACKET SHELL:
JACKET HEADS:
SHELL NOZZLES: NECKS SA-106-B — FLANGES SA-105
JACKET NOZZLES: NECKS — FLANGES
COILS:
BOLTING: SA-193-B7 W/ SA-194-2H NUTS SHIPPING: CS
RE-PADS: SA-516-70 — LIFT LUGS: SA-516-70
GASKETS: JM-60 SHIPPING GSKTS.: RUBBER
SUPPORTS: SA-36
CODE INSPECTION & STAMP: ASME BY LUMBERMENS MUTUAL CASUALTY CO.
INSPECTION - OTHER - BY CUSTOMER
RADIOGRAPH: HEAD TO SHELL REF. DWG L88-0055-E (1/2" SH. 6) SPOT X-RAY — THERMAL TREATMENT NOT REQ'D.
CORR. ALLOW: TOP HD & SHELL: 0.125" BTM. HD.: 0.25" — SANDBLAST: NOT REQ'D.
PAINT: NOT REQ'D.
WORKING VOLUME: 10000 GAL.
WEIGHT: EMPTY = 36276 LBS FULL OF H_2O = 137034 LBS VOL = 12115 GAL
REFERENCE DWG. & SPECS: DOW CORNING DATA SHTS. M800-V001 SHT. 1 & 2
SPEC. 2149 REV. 1 SK. NO. M800-19781 THRU 4
REFERENCE ORDER: 132610
ITEM: # 19783
PROJECT 10721
REF DWG L88-0055-E — NO. REQ'D. (1)

NO.	REVISIONS	DATE
1	REV. PER APP'L. & CERT. FOR CONST.	5/12/88

SUPERIOR WELDING COMPANY
DECATUR, ILLINOIS

REV. 1

JOB NO. 05-88-0055-03
DWG L88-0055-C

DOW CORNING CORPORATION

MIDLAND PLANT 806 TANK FARM
WASTE SOLVENT STORAGE TANK

SCALE	INCH	FOOT	DRAWING NUMBER	REVISION
			W-71490	0

MARK	LOCATION	DATE	REVISIONS	CHANGED BY	APPROVED BY	DATE	MARK	LOCATION	DATE	REVISIONS	CHANGED BY	APPROVED BY	DATE

DESIGNED BY — DATE
DRAWN BY — DATE
CHECKED BY — DATE
APPROVED BY — DATE

03/24/99

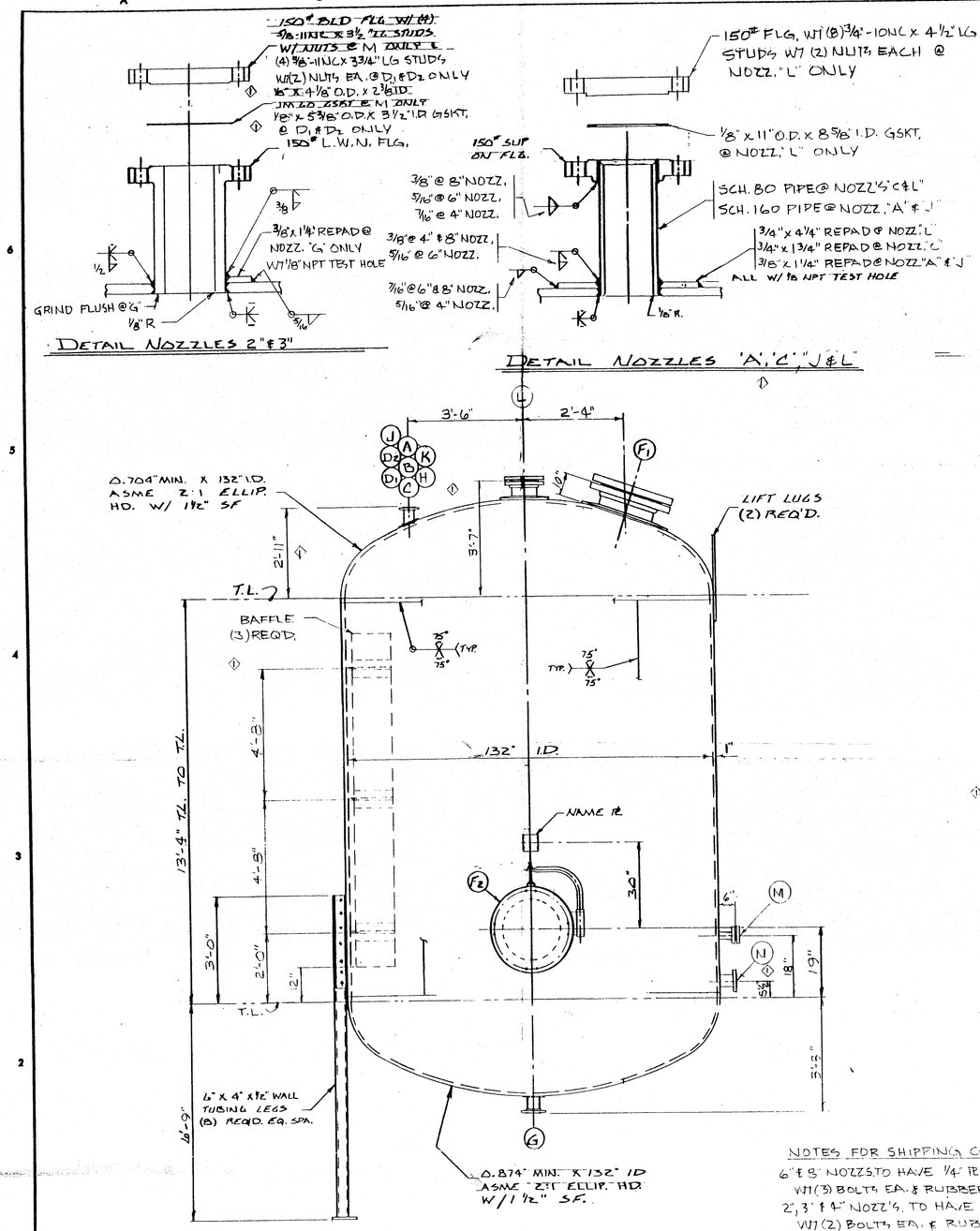

ELEVATION

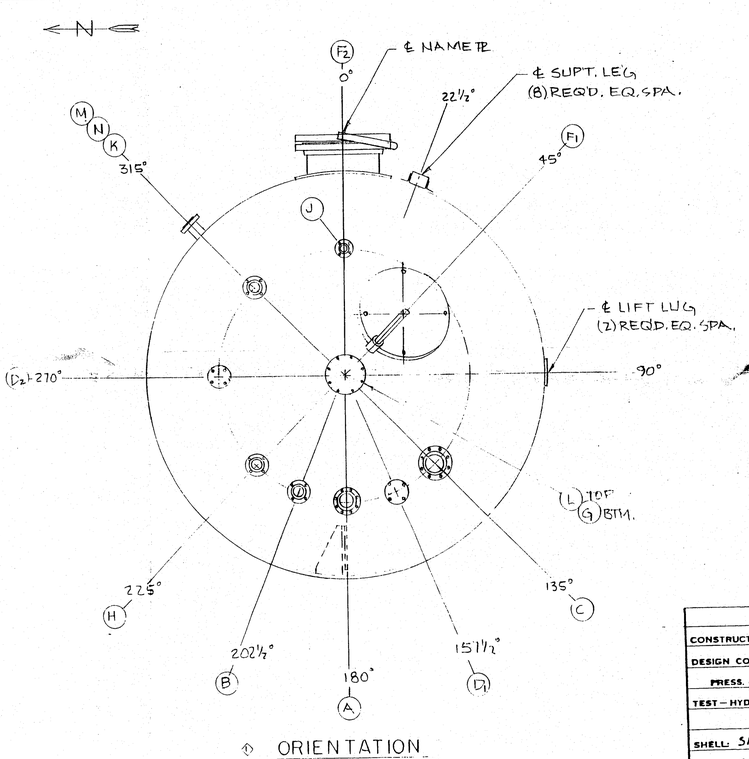

ORIENTATION

STAND PIPE SCHED.
(2) 1/8" x 22 1/4" O.D. x 24" I.D. GASKET
(1) 1/8" x 4 1/8" O.D. x 2 3/8" I.D. GASKET
(2) 1/8" x 5 3/8" O.D. x 3 1/2" I.D. GASKET
(1) 1/8" x 11" O.D. x 8 5/8" I.D. GASKET

CERTIFIED FOR CONSTRUCTION
SUPERIOR WELDING COMPANY
DATE - 5-20-88
APPVD - RB

NOTES FOR SHIPPING COVERS
6" & 8" NOZZS TO HAVE 1/4" PL SHIPPING COVERS W/ (3) BOLTS EA. & RUBBER GASKETS.
2", 3" & 4" NOZZ'S. TO HAVE 150# BLD. FLG'S. W/ (2) BOLTS EA. & RUBBER GASKETS.

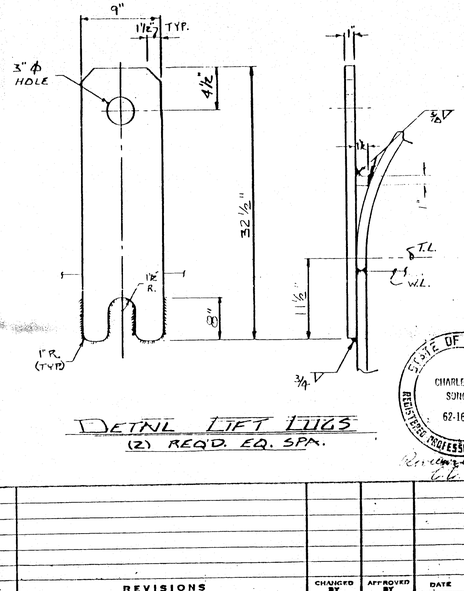

DETAIL LIFT LUGS
(2) REQ'D. EQ. SPA.

STATE OF ILLINOIS
CHARLES C. SONGER
62-16970
REGISTERED PROFESSIONAL ENGINEER

FITTING SCHEDULE

MK	NO. REQ'D	DESCRIPTION	REMARKS
A	1	4"-150# NOZZ. SO	INLET
B	1	3"-150# NOZZ. L.W.N.	RECIRC.
C	1	6"-150# NOZZ. SO	RELIEF
D1	1	3"-150# NOZZ. L.W.N.	SPARE W/ BLIND
E			
F1/F2	2	24" 150# NOZZ SO	MANWAY
G	1	3"-150# NOZZ L.W.N.	OUTLET
H	1	3"-150# NOZZ L.W.N.	LEVEL SWITCH
D2	1	3"-150# NOZZ L.W.N.	SPARE W/ BLIND
K	1	3"-150# NOZZ L.W.N.	LEVEL INST.
J	1	4"-150# NOZZ S.O.	N2 BLANKET

WELD NOTES

CS-TO	CS	MG-1D	R-70 WIRE
"	"	MIG	E 70IB STICK
"	"	SA1-70	L-50 WIRE B60 FLUX

	L	1	8" 150# NOZZ. S.O.	AGITATOR W/ BLIND
	M	1	2" 150# NOZZ. L.W.N.	SPARE W/ BLIND
	N	1	3" 150# NOZZ. L.W.N.	LEVEL SWITCH

NOZZLE FLANGE DIMENSIONS TO CONFORM TO 150# ANSI SLIP ON FLG STDS. BOLT HOLES TO STRADDLE ℄'S PARALLEL TO PRINCIPAL VESSEL ℄'S

VESSEL SPECIFICATIONS

CONSTRUCTION: CODE - ASME SECT. VIII DIV. I 1986 EDIT. 12-31-86 ADD

DESIGN CONDITIONS:	SHELL	JACKET, COIL OR TUBE
PRESS. & TEMP.	F.V. & 150 PSIG @ -20° TO 520°F.	
TEST - HYDROSTATIC	HORIZ. @ 245 PSIG	

MATERIAL

SHELL: SA-516-70
HEADS: SA-516-70
JACKET SHELL:
JACKET HEADS:
SHELL NOZZLES: NECKS SA-106-B — FLANGES SA-105
JACKET NOZZLES: NECKS
COILS:
BOLTING: SA-193-B7 W/ SA-194-2H NUTS SHIPPING: CS
RE-PADS: SA-516-70 — LIFT LUGS: SA-516-70
GASKETS: JM-60 SHIPPING GSKTS.: RUBBER
SUPPORTS: SA-36
CODE INSPECTION & STAMP: ASME BY LUMBERMENS MUTUAL CASUALTY CO.
INSPECTION - OTHER - BY CUSTOMER
HEAD TO SHELL: FULL PENETRATION WELD
RADIOGRAPH: SPOT X-RAY — THERMAL TREATMENT NOT REQ'D.
TOP HD & SHELL: 0.125"
CORR. ALLOW: BTM. HD.: 0.25" — SANDBLAST: NOT REQ'D.
PAINT: NOT REQ'D.

WEIGHT: EMPTY = 136276 LBS FULL OF H_2O = 137034 LBS VOL = 12115 GAL
REFERENCE DWG. & SPECS: DOW CORNING DATA SHTS. M800-V001 SHT. 1 & 2
SPEC. 2147 REV. 1 SER. NO. M800-19781 THRU 4
REFERENCE ORDER: 132610
ITEM: # 19704
PROJECT 10721
REF DWG L88-0055-E — NO. REQ'D. (1)

NO.	REVISIONS	DATE
	REVISED REF'L. 5/21/88 CERT. FOR CONST.	5-12 RB

SUPERIOR WELDING COMPANY
DECATUR, ILLINOIS

REV. 1

JOB NO. 05-88-0055-04
DWG L88-0055-D

DOW CORNING CORPORATION
MIDLAND PLANT - 806 TANK FARM
WASTE SOLVENT STORAGE TANK

SCALE	INCH	FOOT	DRAWING NUMBER	REVISION
			WI-71491	0

MARK	LOCATION	DATE	REVISIONS	CHANGED BY	APPROVED BY	DATE	MARK	LOCATION	DATE	REVISIONS	CHANGED BY	APPROVED BY	DATE

DESIGNED BY — DATE
DRAWN BY — DATE
CHECKED BY — DATE
APPROVED BY — DATE

03/24/99

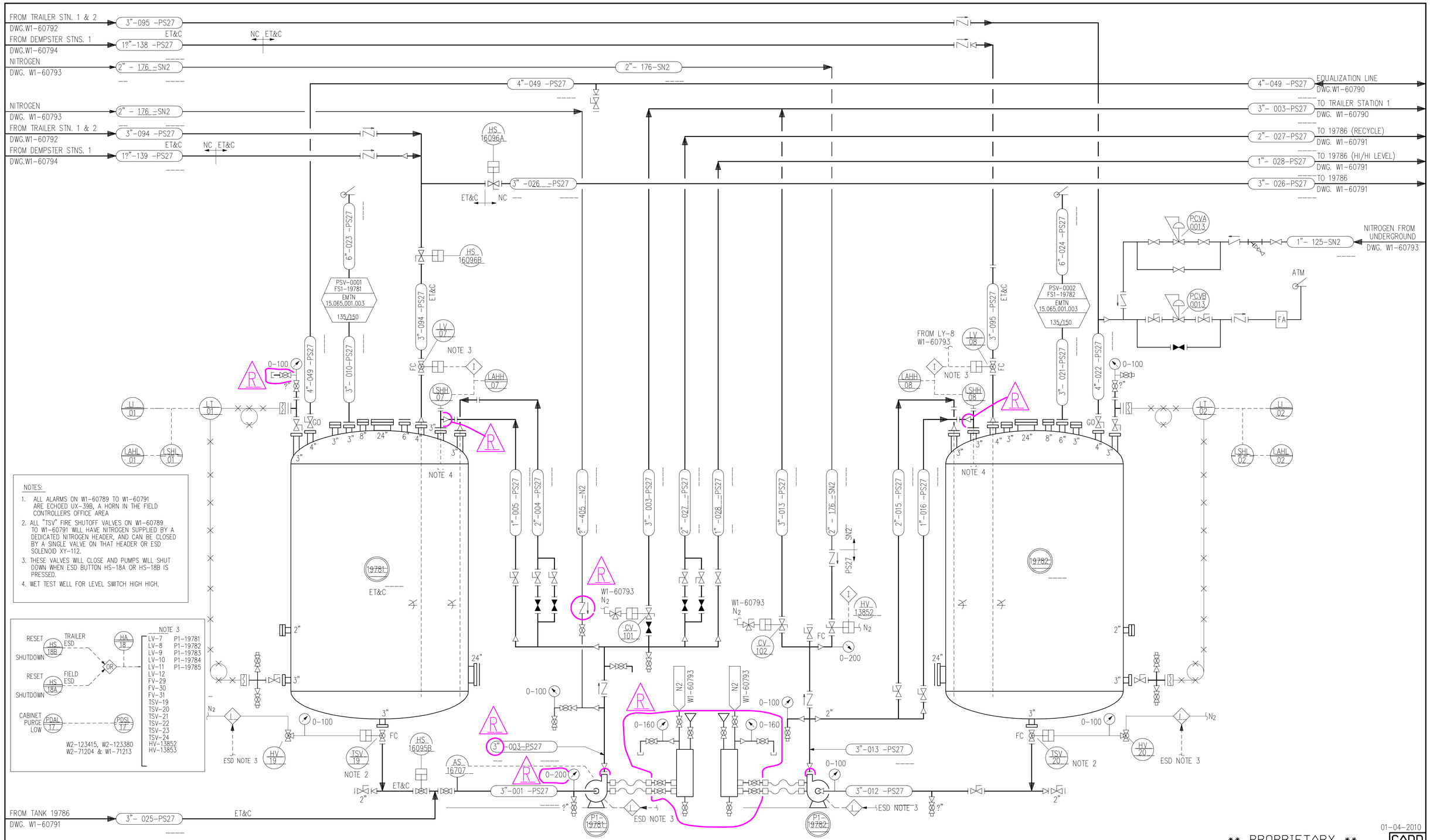

LINE NUMBER SCHEDULE			FLANGE NUMBER SCHEDULE		
FROM	TO	LAST NUMBER USED	FROM	TO	LAST NUMBER USED
001	030	028	001	099	022

MARK	LOCATION	DATE	REVISIONS	CHANGED	APPROVED	DATE
H	GEN	10-24-94	ADDED FALNGE NUMBERS AND SCHEDULE	MRN	MET	10-24-94
J	GEN	10-29-96	ADDED ACTUATORS TO PLUG VALVES 3 & 9	JAM	DLW	10-29-96
K	GEN	14OCT98	FIELD REVISIONS	RDR	SVP	14OCT98
L	GEN	05NOV98	ADDED ESD TO TSV'S AND PUMPS	DLB	FPY	05NOV98
M	GEN	22JUL99	FIELD REVISIONS	DLB	MDS	22JUL99
N	GEN	29OCT99	ADDED SEAL POTS/PIPING TO P1-19781/19782	RDR	JLW	29OCT99
P	GEN	05NOV99	ADDED LINE #2"-176-SN2 & HV-13852	RKW	RKW	05NOV99

MARK	LOCATION	DATE	REVISIONS	CHANGED	APPROVED	DATE
Q	GEN	9-7-00	REVISED PER PCR 800-99-5	PAP	MRN	9-7-00
R	GEN	25FEB04	REVISE PER HAZOP WALK DOWN	RLB	MGS	25FEB04
S	GEN	12JAN09	REVISED PER HAZOP WALKDOWN	LCA	MGS	12JAN09
T						
E	GEN	6-30-94	800 BLOCK HAZOP AS-BUILT REVISIONS	KDM	KDM	6-30-94
F	GEN	8-19-94	REVISED VALVE NUMBERS TO DATE	MRN	MET	8-19-94
G	GEN	9-22-94	REVISED VALVE NUMBERS TO DATE	MRN	MET	9-22-94

01-04-2010

** PROPRIETARY **

CADD

		DATE
DESIGNED	C.G.ROWE	11-19-87
DRAWN	S.UDELL	11-23-87
CHECKED	SBR/TSW	02-26-88
APPROVED	S.B.ROELOFS	03-04-88

DOW CORNING CORPORATION

MIDLAND PLT — 806 TANK FARM

WASTE SOLVENT STORAGE

P&ID — SHEET 1 OF 6

SCALE	INCH	FOOT	DRAWING NUMBER	REVISION
	NONE		W1-60789	S

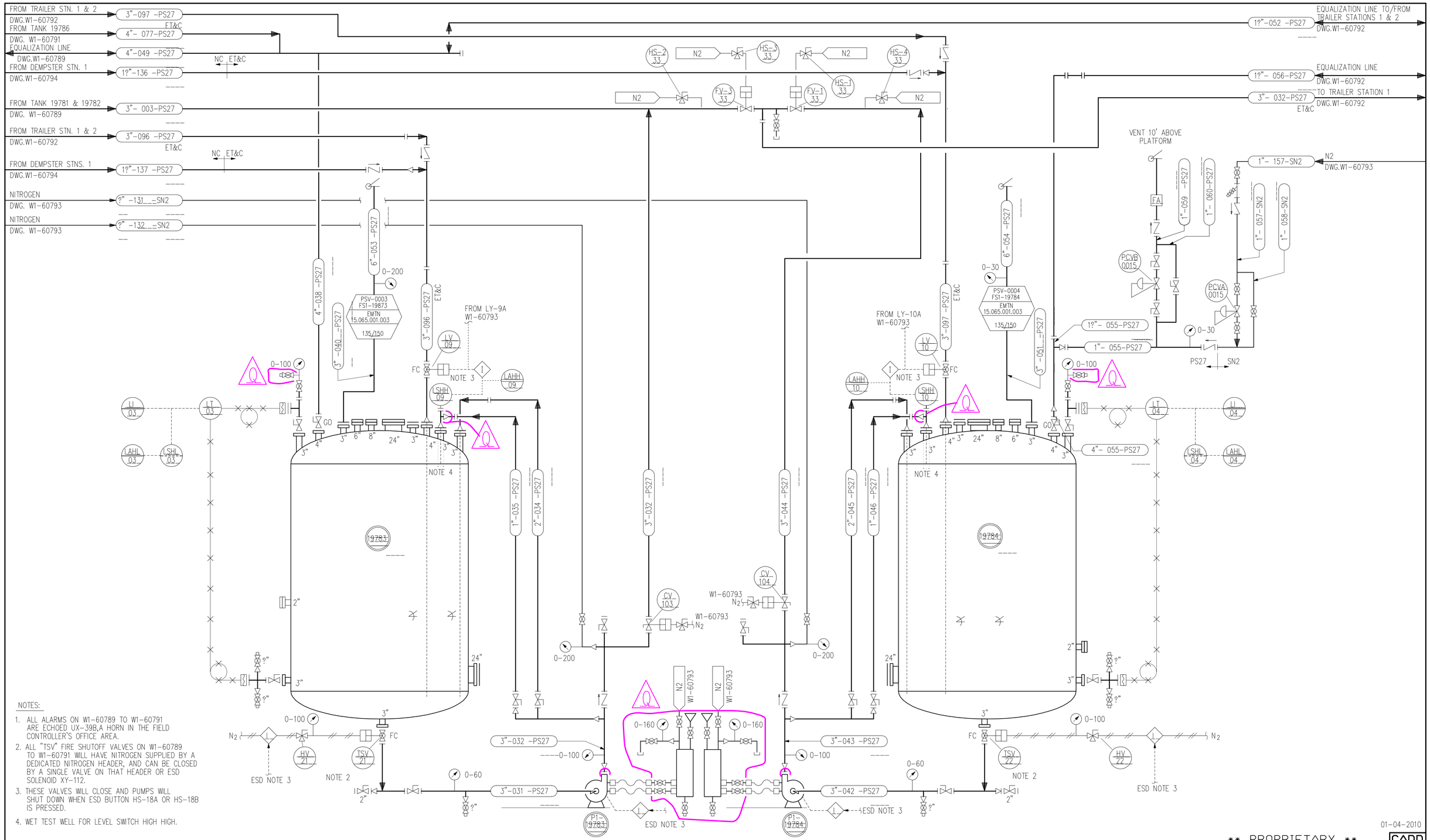

NOTES:

1. ALL ALARMS ON W1-60789 TO W1-60791 ARE ECHOED UX-39B,A HORN IN THE FIELD CONTROLLER'S OFFICE AREA.
2. ALL "TSV" FIRE SHUTOFF VALVES ON W1-60789 TO W1-60791 WILL HAVE NITROGEN SUPPLIED BY A DEDICATED NITROGEN HEADER, AND CAN BE CLOSED BY A SINGLE VALVE ON THAT HEADER OR ESD SOLENOID XY-112.
3. THESE VALVES WILL CLOSE AND PUMPS WILL SHUT DOWN WHEN ESD BUTTON HS-18A OR HS-18B IS PRESSED.
4. WET TEST WELL FOR LEVEL SWITCH HIGH HIGH.

01-04-2010

** PROPRIETARY **

CADD

LINE NUMBER SCHEDULE			FLANGE NUMBER SCHEDULE		
FROM	TO	LAST NUMBER USED	FROM	TO	LAST NUMBER USED
031	060	060	100	199	132
———	———	———	———	———	———
———	———	———	———	———	———
———	———	———	———	———	———
———	———	———	———	———	———
———	———	———	———	———	———

MARK	LOCATION	DATE	REVISIONS	CHANGED	APPROVED	DATE
H	GEN	10-24-94	ADDED FLANGE NUMBERS AND SCHEDULE	MRN	MET	10-24-94
J	GEN	10-29-96	ADDED ACTUATORS TO PLUG VALVES 15 & 21	JAM	DLW	10-29-96
K	GEN	150CT98	FIELD REVISIONS	DLB	CVP	150CT98
L	GEN	05NOV98	ADDED ESD TO TSV'S AND PUMPS	DLB	FPY	05NOV98
M	GEN	200CT99	AS BUILT REVISIONS	JDW	MGS	200CT99
N	GEN	290CT99	ADDED SEAL POT/PIPING TO P1-19783/4	RDR	JLW	290CT99
P	GEN	07SEP00	REVISED PER PCR 800-99-5	PAP	MRN	07SEP00

MARK	LOCATION	DATE	REVISIONS	CHANGED	APPROVED	DATE
Q	GEN	26FEB04	REVISE PER HAZOP WALK DOWN	RLB	MGS	26FEB04
R	GEN	12JAN08	REVISED PER HAZOP WALKDOWN	LCA	MGS	12JAN08
S						
D	GEN	2-3-92	ADDED VALVE NUMBERS	HAD	JRH	2-92
E	GEN	6-30-94	800 BLOCK HAZOP AS-BUILT REVISIONS	KDM	KDM	6-30-94
F	B-5 F-5	7-25-94	CHANGED EQID #'S ON N2 REGS & RELIEF VALVES	MRN	JAW	7-25-94
G	GEN	8-19-94	REVISED VALVE NUMBERS TO DATE	MRN	MET	8-19-94

DESIGNED C.G.ROWE	DATE 11-19-87	DOW CORNING CORPORATION
DRAWN S.UDELL	DATE 11-23-87	MIDLAND PLT — 806 TANK FARM
CHECKED SBR/TSW	DATE 02-26-88	WASTE SOLVENT STORAGE — P&ID — SHEET 2 OF 6
APPROVED S.B.ROELOFS	DATE 03-04-88	SCALE: INCH / FOOT: NONE — DRAWING NUMBER: W1-60790 — REVISION: R

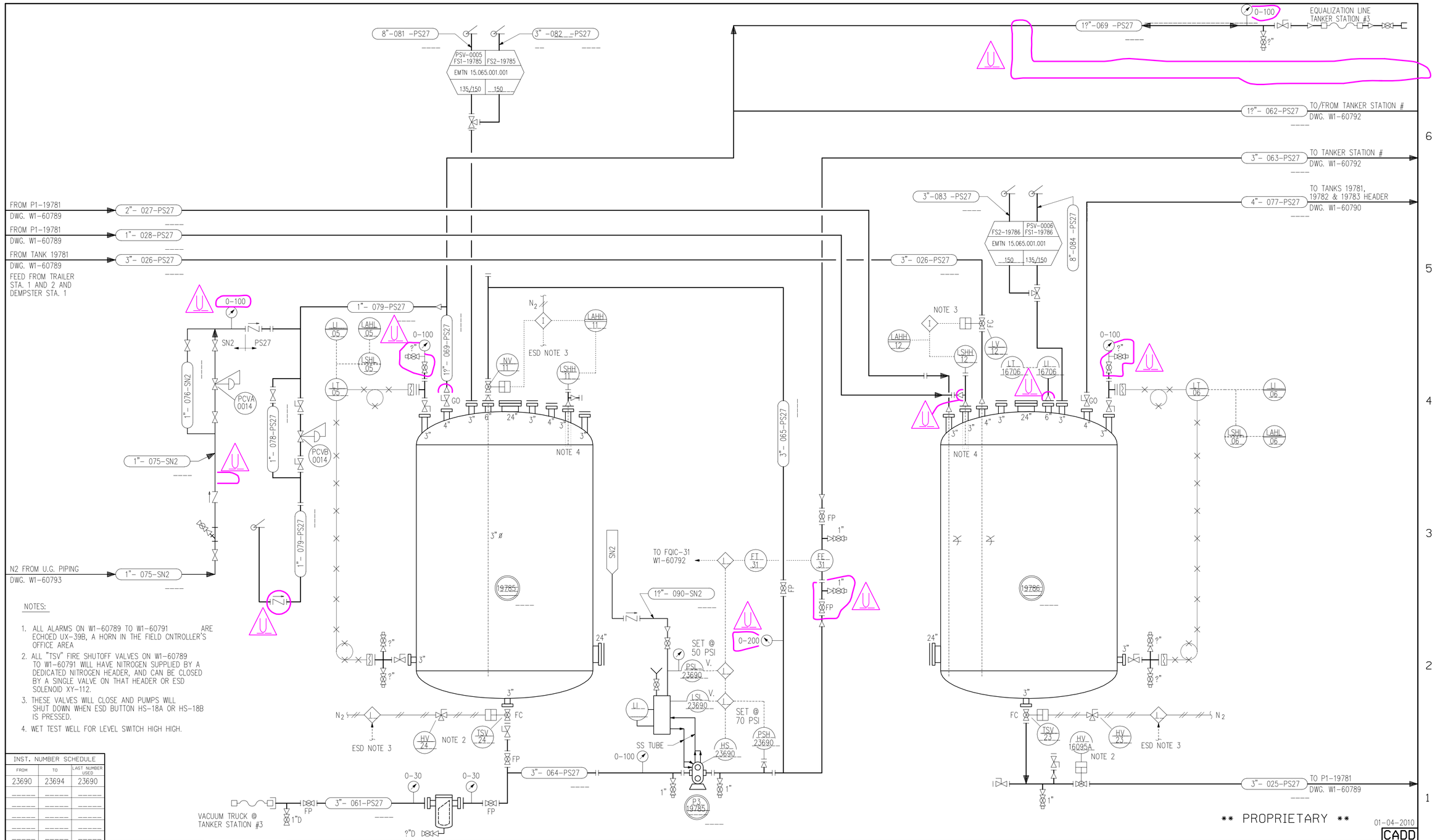

NOTES:

1. ALL ALARMS ON W1-60789 TO W1-60791 ARE ECHOED UX-39B, A HORN IN THE FIELD CNTROLLER'S OFFICE AREA
2. ALL "TSV" FIRE SHUTOFF VALVES ON W1-60789 TO W1-60791 WILL HAVE NITROGEN SUPPLIED BY A DEDICATED NITROGEN HEADER, AND CAN BE CLOSED BY A SINGLE VALVE ON THAT HEADER OR ESD SOLENOID XY-112.
3. THESE VALVES WILL CLOSE AND PUMPS WILL SHUT DOWN WHEN ESD BUTTON HS-18A OR HS-18B IS PRESSED.
4. WET TEST WELL FOR LEVEL SWITCH HIGH HIGH.

INST. NUMBER SCHEDULE		
FROM	TO	LAST NUMBER USED
23690	23694	23690

LINE NUMBER SCHEDULE		
FROM	TO	LAST NUMBER USED
061	090	090

FLANGE NUMBER SCHEDULE		
FROM	TO	LAST NUMBER USED
200	299	220

MARK	LOCATION	DATE	REVISIONS	CHANGED	APPROVED	DATE
H	GEN	8-19-94	REVISED VALVE NUMBERS TO DATE	MRN	MET	8-19-94
J	GEN	10-25-94	ADDED FLANGE NUMBERS AND SCHEDULE	MRN	MET	10-25-94
K	D-5	04-23-96	REPLACED CHECK VALVE W/ SHUT OFF VALVE	JKL	SWN	04-23-96
L	GEN	15OCT98	FIELD REVISIONS	DLB	CVP	15OCT98
M	GEN	05NOV98	ADDED ESD TO PUMPS AND TSV'S	DLB	FPY	05NOV98
N	GEN	17DEC98	ADDED LINE 089 TO DRAWING	WRL	JEH	17DEC98
P	J-5	21JAN99	REVISED VALVE PER AS-BUILT	WRL	GMP	21JAN99

MARK	LOCATION	DATE	REVISIONS	CHANGED	APPROVED	DATE
Q	GEN	9-06-00	REVISED PER PCR 800-99-5	PAP	MRN	9-06-00
R	GEN	8-27-03	REMOVED LINES, PUMP AND RESERVOIR REVISED FOR TEMPORARY PCR	CAF	MCS	8-27-03
S	GEN	07JAN04	REVISED/ADDED EQUALIZATION LINES	RFP	ABK	03MAR04
T	E-1	16NOV05	REPLACED P3-19785 PER PCR#806-06-01	TAK	LES	14JUN06
U	GEN	12JAN09	REVISED PER HAZOP WALKDOWN	LCA	MCS	12JAN09
V						

		DATE
DESIGNED	C.G.ROWE	11-19-87
DRAWN	S.UDELL	11-23-87
CHECKED	SBR/TSW	02-26-88
APPROVED	S.B.ROELOFS	03-04-88

DOW CORNING CORPORATION

MIDLAND PLT — 806 TANK FARM

WASTE IPA/SILOXANE STORAGE

P&ID — SHEET 3 OF 6

SCALE	INCH	FOOT	DRAWING NUMBER	REVISION
	NONE		W1-60791	U

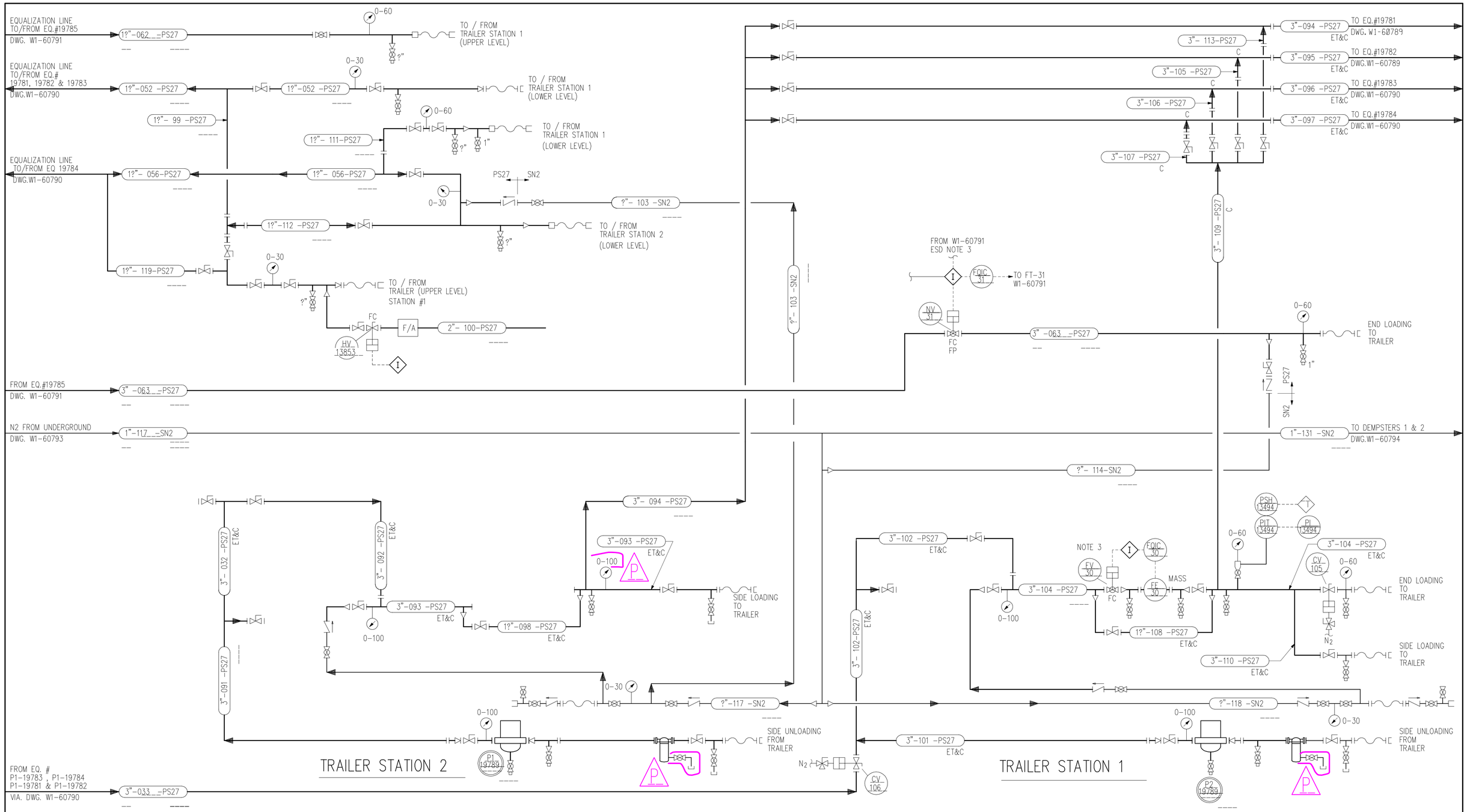

3. THESE VALVES WILL CLOSE WHEN ESD BUTTON HS-18A OR HS-18B IS PRESSED

LINE NUMBER SCHEDULE			FLANGE NUMBER SCHEDULE		
FROM	TO	LAST NUMBER USED	FROM	TO	LAST NUMBER USED
091	120	119	300	399	328

MARK	LOCATION	DATE	REVISIONS	CHANGED	APPROVED	DATE
H	GEN	10-25-94	ADDED FLANGE NUMBERS AND SCHEDULE	MRN	MET	10-25-94
J	GEN	10-29-96	ADDED ACTUATORS TO PLUG VALVES 56 & 57	JAM	DLW	10-29-96
K	GEN	14OCT98	FIELD REVISIONS	RDR	SVP	14OCT98
L	GEN	05NOV99	REVISED LINES #056,99,103,112,100 & 119	RKW	MGS	05NOV99
M	GEN	07SEP00	REVISED PER PCR 800-99-5	PAP	MRN	07SEP00
N	GEN	09JAN04	ADDED/REVISED EQUALIZATION LINES	RFP	ABK	03MAR04
P	GEN	12JAN09	REVISED PER HAZOP WALKDOWN	LCA	MGS	12JAN09

MARK	LOCATION	DATE	REVISIONS	CHANGED	APPROVED	DATE
Q						
B	D,J-2	5-3-89	ADDED P1,P2-19789	MOQUIN	SBR	5-3-89
C	GEN	3-16-90	ADDED EQUALIZATION LINE (1?"-056)	HAD	JJ	3-90
D	GEN	2-4-92	ADDED VALVE NUMBERS	HAD	JRH	2-92
E	GEN	6-30-94	800 BLOCK HAZOP AS-BUILT REVISIONS	KDM	KDM	6-30-94
F	GEN	8-19-94	REVISED VALVE NUMBERS TO DATE	MRN	MET	8-19-94
G	GEN	9-22-94	REVISED VALVE NUMBERS TO DATE	MRN	MET	9-22-94

DESIGNED	C.G.ROWE	DATE 11-19-87
DRAWN	T.A.KAMINSKI	DATE 11-24-87
CHECKED	SBR/TSW	DATE 02-26-88
APPROVED	S.B.ROELOFS	DATE 03-04-88

01-04-2010

** PROPRIETARY **

CADD

DOW CORNING CORPORATION

MIDLAND PLT — 806 TANK FARM

WASTE SOLVENT TRAILER LOADING/UNLOADING STATION

P&ID — SHEET 4 OF 6

SCALE	INCH	FOOT	DRAWING NUMBER	REVISION
	NONE		W1-60792	P

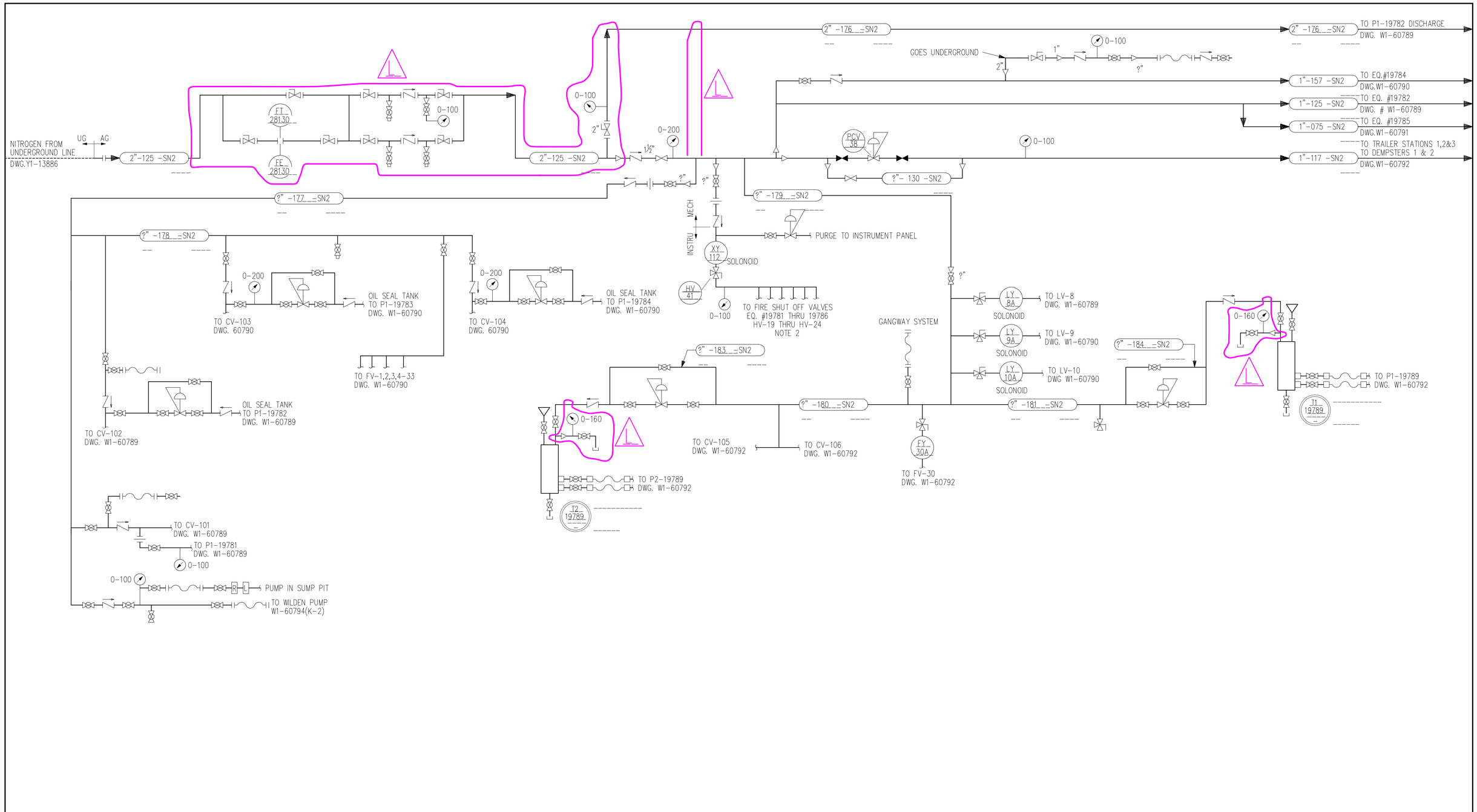

2. ALL "TSV" FIRE SHUTOFF VALVES ON W1-60789 TO W1-60791 WILL HAVE NITROGEN SUPPLIED BY A DEDICATED NITROGEN HEADER, AND CAN BE CLOSED BY A SINGLE VALVE ON THAT HEADER

3. THESE VALVES WILL CLOSE WHEN ESD BUTTON HS-18A OR HS-18B IS PRESSED

LINE NUMBER SCHEDULE			FLANGE NUMBER SCHEDULE		
FROM	TO	LAST NUMBER USED	FROM	TO	LAST NUMBER USED
121	130	130	400	499	406
176	195	184			

MARK	LOCATION	DATE	REVISIONS	CHANGED	APPROVED	DATE
H	GEN	07SEP00	REVISED PER PCR 800-99-5	PAP	MRN	07SEP00
J	GEN	28AUG03	REMOVED LINES 62, 121, 122 AND 123	CAF	MGS	27AUG03
K	GEN	02MAR04	REVISE PER HAZOP WALK DOWN	RLB	MGS	02MAR04
L	GEN	14JAN09	REVISED PER HAZOP WALKDOWN	LCA	MGS	14JAN09
M						
N						
P						

MARK	LOCATION	DATE	REVISIONS	CHANGED	APPROVED	DATE
A			ISSUED FOR CONSTRUCTION		SBR	3-25-88
B	K-6	10-4-91	ADDED LINE FOR EQUIP # 197840	HAD	JRH	10-4-91
C	GEN	2-5-92	ADDED VALVE NUMBERS	HAD	JRH	2-92
D	GEN	9-22-94	REVISED VALVES AND VALVE NUMBERS TO DATE	MRN	MET	9-22-94
E	GEN	10-25-94	ADDED FLANGE NUMBERS AND SCHEDULE	MRN	MET	10-25-94
F	GEN	15OCT98	FIELD REVISIONS	DLB	CVP	15OCT98
G	GEN	03NOV99	FIELD REVISIONS AND ADDED LINE #176	JDW	MGS	03NOV99

04JAN2010

** PROPRIETARY **

CADD

DESIGNED	C.G. ROWE	DATE 11-23-87
DRAWN	PW NELSON	DATE 11-23-87
CHECKED	SBR/TSW	DATE 02-26-88
APPROVED	S.B.ROELOFS	DATE 03-04-88

DOW CORNING CORPORATION

WASTE CONTROL — 806 TANK FARM

NITROGEN DISTRIBUTION

P&ID — SHEET 5 OF 6

SCALE	INCH	FOOT	DRAWING NUMBER	REVISION
	NONE		W1-60793	L

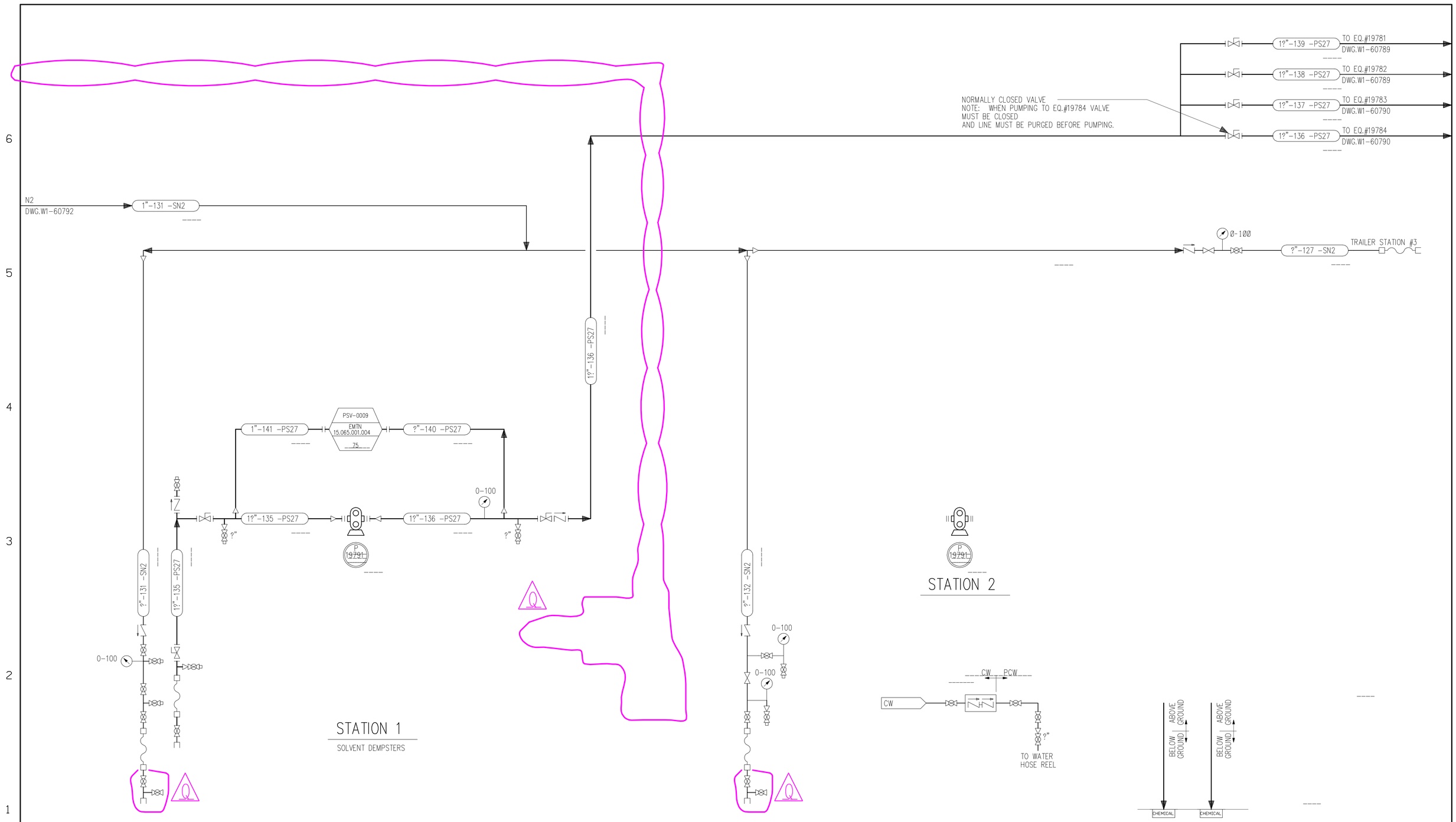

01-04-2010

** PROPRIETARY **

CADD

LINE NUMBER SCHEDULE			FLANGE NUMBER SCHEDULE		
FROM	TO	LAST NUMBER USED	FROM	TO	LAST NUMBER USED
131	160	155	500	599	511

MARK	LOCATION	DATE	REVISIONS	CHANGED	APPROVED	DATE
H	GEN	9-22-94	REVISED VALVES & VALVE NUMBERS TO DATE	MRN	MET	9-22-94
J	GEN	10-25-94	ADDED FLANGE NUMBERS AND SCHEDULE	MRN	MET	10-25-94
K	G-3	12-24-97	ADDED DURA CIRULATOR PUMP & COOLER COIL	WRL	DLW	12-24-97
L	GEN	14OCT98	FIELD REVISIONS	RDR	CVP	14OCT98
M	GEN	07SEP00	REVISED PER PCR 800-99-5	PAP	MRN	07SEP00
N	GEN	08AUG03	REMOVED LINES AND PUMP P2-19785	CAF	MGS	27AUG03
P	GEN	02MAR04	REVISE PER HAZOP WALK DOWN	RLB	MGS	02MAR04

MARK	LOCATION	DATE	REVISIONS	CHANGED	APPROVED	DATE
Q	GEN	14JAN09	REVISED PER HAZOP WALKDOWN	LCA	MGS	14JAN09
R						
C	G-3	4-2-90	ADDED DRAIN VALVE, AND NOTE	HAD	JMJ	4-90
D	GEN	2-5-92	ADDED VALVE NUMBERS	HAD	JRH	2-92
E	GEN	10-13-92	ADDED LINE #151	KDM	KDM	3-93
F	GEN	6-30-94	800 BLOCK HAZOP AS-BUILT REVISIONS	KDM	KDM	6-30-94
G	GEN	8-19-94	REVISED VALVES & VALVE NUMBERS TO DATE	MRN	MET	8-19-94

DESIGNED	C.G. ROWE	DATE 11-23-87
DRAWN	PW NELSON	DATE 11-23-87
CHECKED	SBR/TSW	DATE 02-26-88
APPROVED	S.B.ROELOFS	DATE 03-04-88

DOW CORNING CORPORATION

MIDLAND PLT — 806 TANK FARM

WASTE SOLVENT
DEMPSTER UNLOADING STATION

P&ID — SHEET 6 OF 6

SCALE	INCH	FOOT	DRAWING NUMBER	REVISION
	NONE		W1-60794	Q

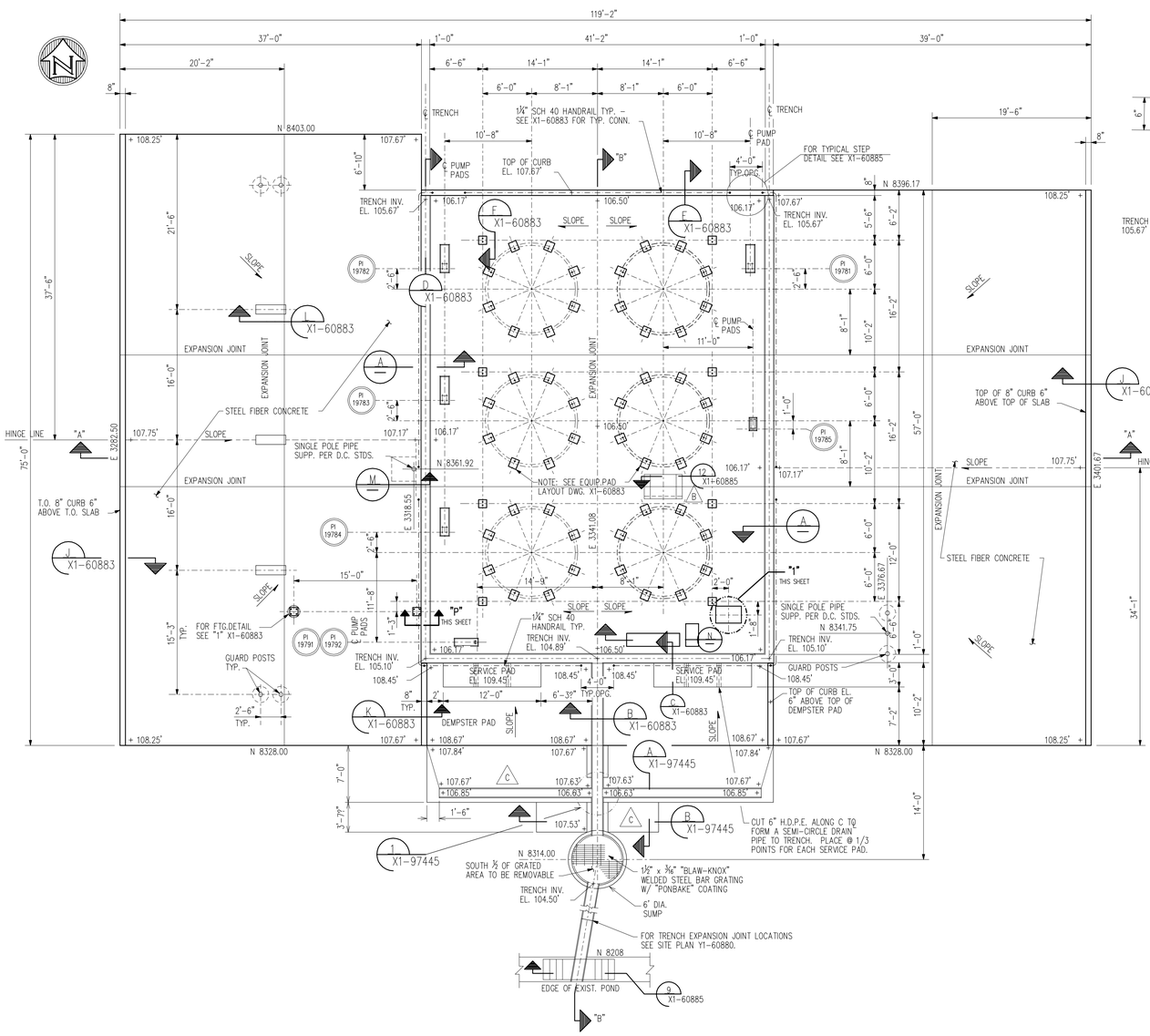

SLAB & TRENCH PLAN

SCALE: ?"=1'-0"

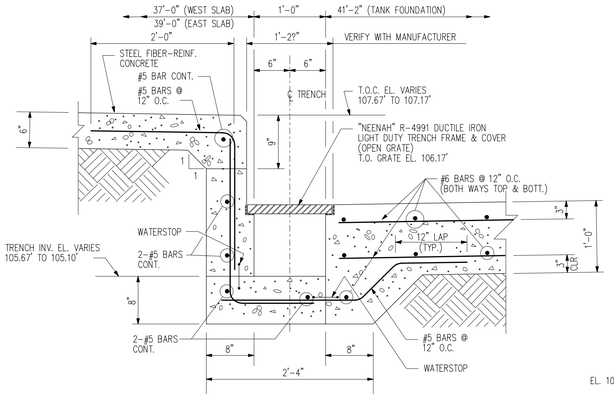

SECTION A

SCALE: 1"=1'-0"

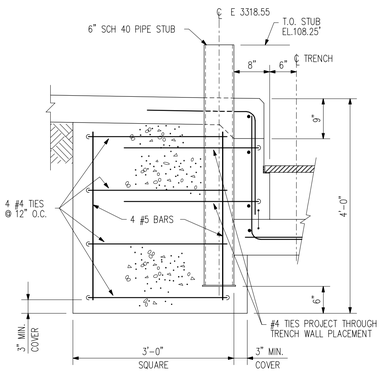

SECTION M

SCALE: ?"=1'-0"

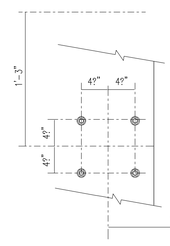

PARTIAL PLAN

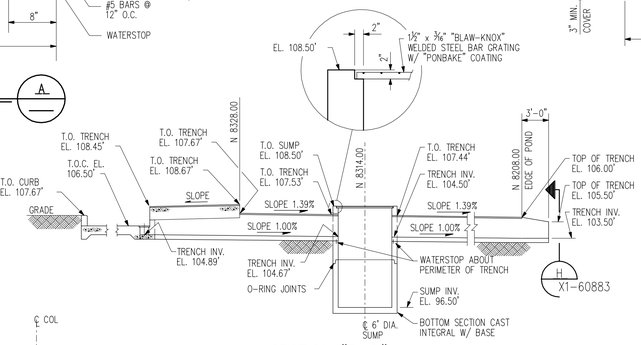

SECTION "B-B"

SCALE: ?"=1'-0"

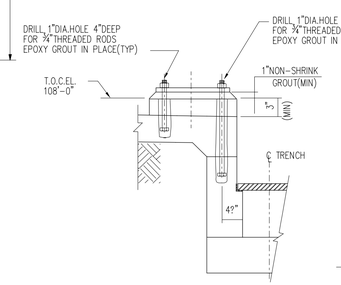

SECTION P

SCALE: NONE

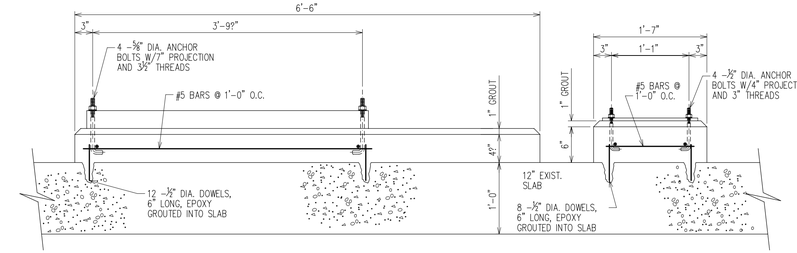

SECTION N

SCALE: 1"=1'-0"

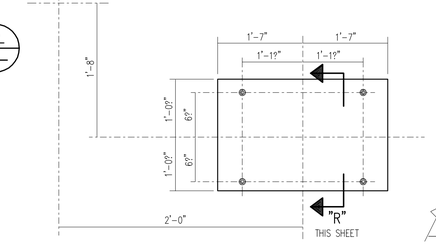

DETAIL "1"

SCALE: NONE REF: THIS SHEET

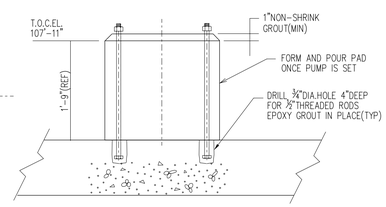

SECTION "R"

SCALE: NONE REF: THIS SHEET

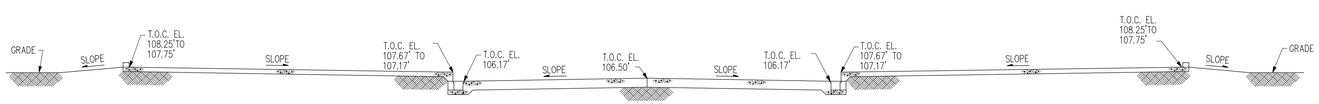

SECTION "A-A"

SCALE: ?"=1'-0"

LAST GENERAL UPDATE: 04JAN2010

GENERAL CONCRETE NOTES:

1. CONCRETE SHALL DEVELOP A MINIMUM COMPRESIVE STRENGTH OF 4000 PSI IN 28 DAYS.
2. REINFORCING STEEL SHALL BE INTERMEDIATE GRADE, DEFORMED, NEW BILLET-STEEL MEETING ASTM SPECIFICATIONS A615-87, GRADE 60.
3. ALL FILL SHALL BE COMPACTED TO 95% MODIFIED PROCTOR.
4. ALL FILL SHALL BE COMPACTED SAND; 6" MINIMUM THICKNESS UNDER SLABS.
5. ALL EXPOSED CONCRETE CORNERS CHAMFERED ?" x 45°.
6. ALL ANCHOR BOLTS SHALL CONFORM TO ASTM SPEC. A-36.
7. ALL CONCRETE SHALL BE AIR-ENTRAINED.
8. WORK SHALL BE DONE IN ACCORDANCE WITH ACI-318, "BUILDING CODE REQUIREMENTS FOR REINFORCED CONCRETE".
9. PLASTIC FIBER-REINFORCED CONCRETE SHALL BE "FORTA FIBRE".
10. STEEL FIBER-REINFORCED CONCRETE SHALL BE "DRAMIX".
11. UNLESS OTHERWISE NOTED, #4 BARS SHALL BE LAPPED 21" MINIMUM, #5 BARS SHALL BE LAPPED 26" MINIMUM AND #6 BARS SHALL BE LAPPED 31" MINIMUM.
12. NO JOINTS ALLOWED OTHER THAN THOSE SHOWN ON DRAWINGS.
13. ALLOWABLE SOIL PRESSURE 2000 P.S.F.. FOR SOILS REPORT SEE FILE #87-356 IN RECORD PRINT #5839.

CADD

MARK	LOC.	REVISIONS	BY	DATE	TECH APPR	INITIALS
U						
V						
W						
X						
Y						
Z						
AA						
AB						
AC						

MARK	LOC.	REVISIONS	BY	DATE	TECH APPR	INITIALS
K						
L						
M						
N						
P						
Q						
R						
S						
T						

MARK	LOC.	REVISIONS	BY	DATE	TECH APPR	INITIALS
A	GEN	ADDED SECTION "N"	JAM	02JAN98	NSD	
B	GEN	ADDED SECTION "P"	RFP	27FEB04	ABK	
C						
D						
E						
F						
G						
H						
J						

DESIGNED BY: K.J.WALKER	DATE 01-11-88	
DRAWN BY: D.A.W./L.K.O.	DATE 01-29-88	
TECHNICAL APPROVAL: K.J.WALKER	INITIALS DATE 06-04-88	
APPROVED FOR ISSUE: R.L.ZITTA	INITIALS DATE 06-06-88	

RELATED DRAWINGS

NUMBER	TITLE
X1-60833	TANK FARM SLAB & FOUNDATION DETAIL

PMSS INFORMATION	ENGRG. DISC.	DWG. TYPE
	CA CONC	PLAN

DOW CORNING CORPORATION

MIDLAND PLANT BLDG. 806

TANK FARM

SLAB AND FOUNDATION PLAN

SCALE	INCH FOOT	DRAWING NUMBER	REVISION
	1" = 1'-0"	X1-60882	B

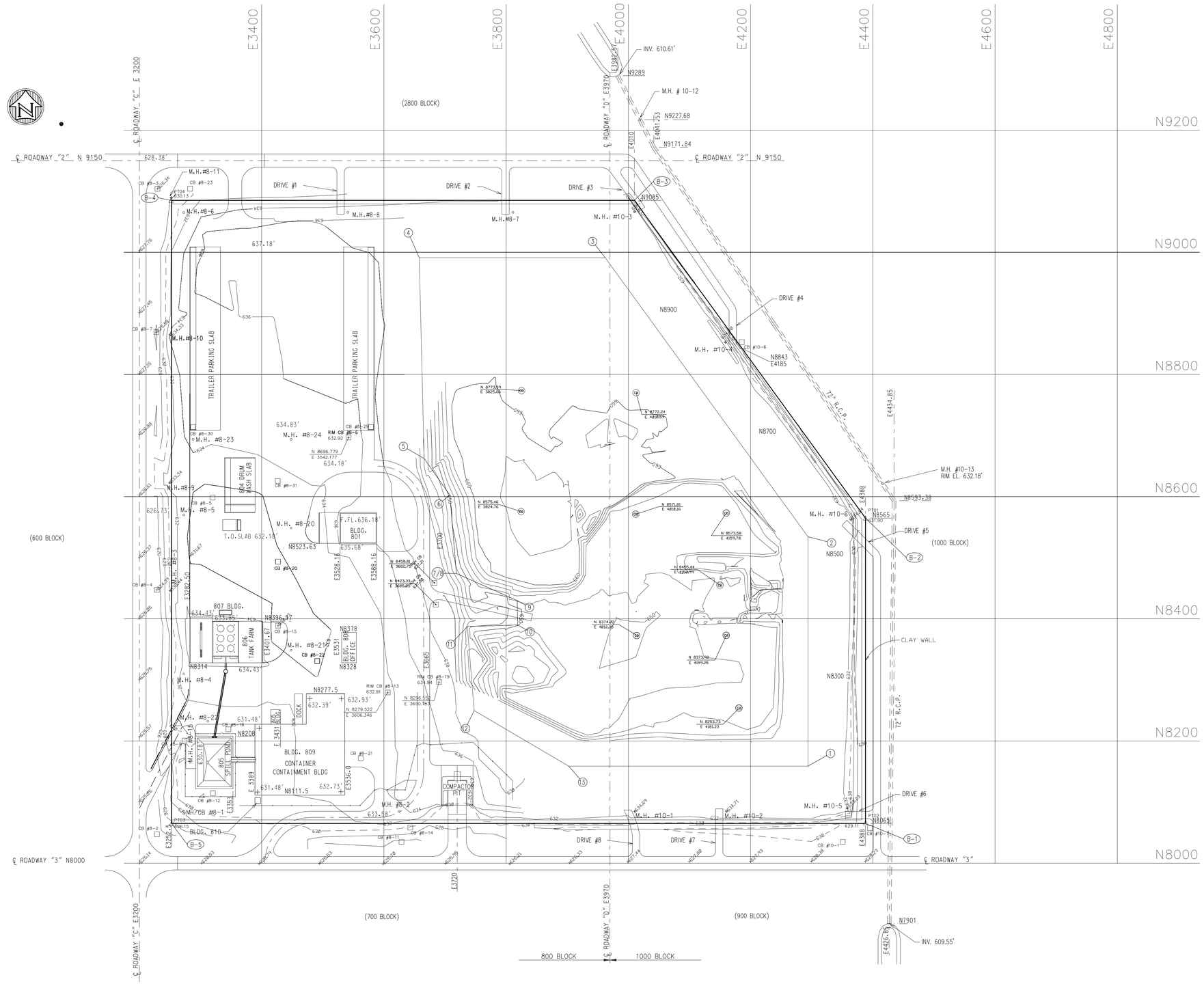

REMAINING AVAILABLE LANDFILL SPACE (EXCLUDING FINAL COVER), CU. YD.	
CALCULATED AGAINST	OCT 1998
LANDFILL LICENSE CLOSURE VOLUME	301,915
LANDFILL INTERIM CLOSURE VOLUME	156,715

1998 BASE FILE POINTS			
POINT	NORTH	EAST	ELEV.(')
14	8199	4254	658.74
15	8521.9	4254	659.05
16	8951	3941.22	659.03
17	8951	3698.96	658.18
18	8676.08	3706.93	658.93
19	8616.60	3746.97	659.29
20	8501.08	3756.54	658.60
21	8450.04	3827.58	657.29
22	8350.04	3819.80	659.64
23	8348.31	3780.60	659.38
24	8273.75	3785.85	659.10
25	8199.00	3913.38	659.10
26	8900.15	3979.02	659.46
27	8830.36	3779.82	658.70
28	8799.12	3738.77	657.96
29	8780.53	3704.12	659.34
30	8229.22	4227.86	654.41
31	8527.67	4234.89	653.67
32	8875.23	3930.84	653.31
33	8813.03	3791.17	648.48
34	8798.48	3759.35	649.13
35	8770.59	3720.64	650.05
36	8677.41	3724.59	650.54
37	8616.79	3767.02	650.16
38	8514.32	3770.46	649.88
39	8450.21	3859.84	652.56
40	8350.00	3850.00	651.00
41	8334.20	3794.41	650.54
42	8278.55	3799.52	650.17
43	8213.10	3922.10	651.57
44	8749.62	3900.11	651.30
45	8599.32	3897.96	654.40
46	8449.29	3901.18	652.41
47	8301.12	3899.98	650.83
48	8598.66	4100.84	653.84
49	8450.03	4099.83	651.56
50	8301.88	4099.33	651.54
51	8428.15	4141.78	651.18
52	8449.83	4199.02	652.75
53	8500.47	4200.04	652.82
54	8481.03	4132.66	652.25
55	8446.91	4188.11	646.59
56	8475.19	4174.42	652.32
57	8474.89	4150.67	646.87
58	8440.67	4156.67	646.49

CONTROL POINTS			ELEVATION
1	N8159	E4294	650.00
2	N8534.44	E4294	650.00
3	N8991	E3962.12	650.00
4	N8991	E3657.98	650.00
5	N8662.61	E3665.94	650.00
6	N8602.52	E3708	650.00
7/8	N8474.15	E3718.63	650.00
9	N8430	E3818.04	650.00
10	N8390	E3818.04	650.00
11	N8387.56	E3736.62	650.00
12	N8249.79	E3747.64	650.00
13	N8159	E3902.52	650.00

BASE POINTS		
B-1	N8065	E4388
B-2	N8565	E4388
B-3	N9085	E4010
B-4	N9085	E3252.5
B-5	N8065	E3252.5

NOTES:

1. THIS DRAWING REPRESENTS ELEVATION SURVEY OF HAZARDOUS WASTE LANDFILL AS OF 12OCT98 PER TOTAL STATION SURVEY DONE BY WADE-TRIM, BAY CITY. THIS TOPOGRAPHY IS USED TO DOCUMENT USED VOLUME AND FILLING RATE IN PLANT LANDFILL AND IS USED IN CALCULATION OF PROJECTED USABLE SPACE AGAINST FINAL CLOSURE PLAN CONTOURS PER DWG. Y1-36615 AND INTERM CLOSURE PLAN CONTOURS PER DWG. Y1-104982.
2. PLANT ELEVATION 0.00' = 526.18' USGS

LAST GENERAL UPDATE: 04JAN2010

CADD

MARK	LOC.	REVISIONS	BY	DATE	TECH APPR	INITIALS
U						
V						
W						
X						
Y						
Z						
AA						
AB						
AC						

MARK	LOC.	REVISIONS	BY	DATE	TECH APPR	INITIALS
K						
L						
M						
N						
P						
Q						
R						
S						
T						

MARK	LOC.	REVISIONS	BY	DATE	TECH APPR	INITIALS
A	GEN	UPDATE DRAWING	JAM	09NOV09	SFH	
B						
C						
D						
E						
F						
G						
H						
J						

		DATE
DESIGNED BY:	S.F. Hartman	24NOV08
DRAWN BY:	J.A. McRoberts	24NOV08
TECHNICAL APPROVAL: (INITIALS)	S.F. Hartman	24NOV08
APPROVED FOR ISSUE: (INITIALS)	R.L. Schroeder	24NOV08

RELATED DRAWINGS

NUMBER	TITLE
Y1-36615	CLOSURE PLAN FINAL TOPOGRAPHY
Y1-106152	1997 TOPOGRAPHY
Y1-104980	1996 TOPOGRAPHY
Y1-99199	1995 TOPOGRAPHY
Y1-99188	1994 TOPOGRAPHY
Y1-97452	1993 TOPOGRAPHY
Y1-93774	1992 TOPOGRAPHY
Y1-93777	INTERIM CLOSURE PLAN

PMSS INFOR-MATION	ENGRG. DISC.	DWG. TYPE
	CA TOPO	PLAN

DOW CORNING CORPORATION

MIDLAND PLANT — 800/1000 BLOCK

HAZARDOUS WASTE LANDFILL

2009 TOPOGRAPHY

SCALE	INCH FOOT	DRAWING NUMBER	REVISION
	1" = 80'	0052-DWG-100021134-Y1	A

REF:

NOTE:
THIS DRAWING SHOWS CONDITIONS AS OF 1986. FOR CURRENT LANDFILL CONDITIONS SEE APPLICABLE LANDFILL DRAWINGS. LINGLE DRAIN WAS BURRIED UNDERGROUND IN SPRING 1990. SEE DWG. Y1-79423.

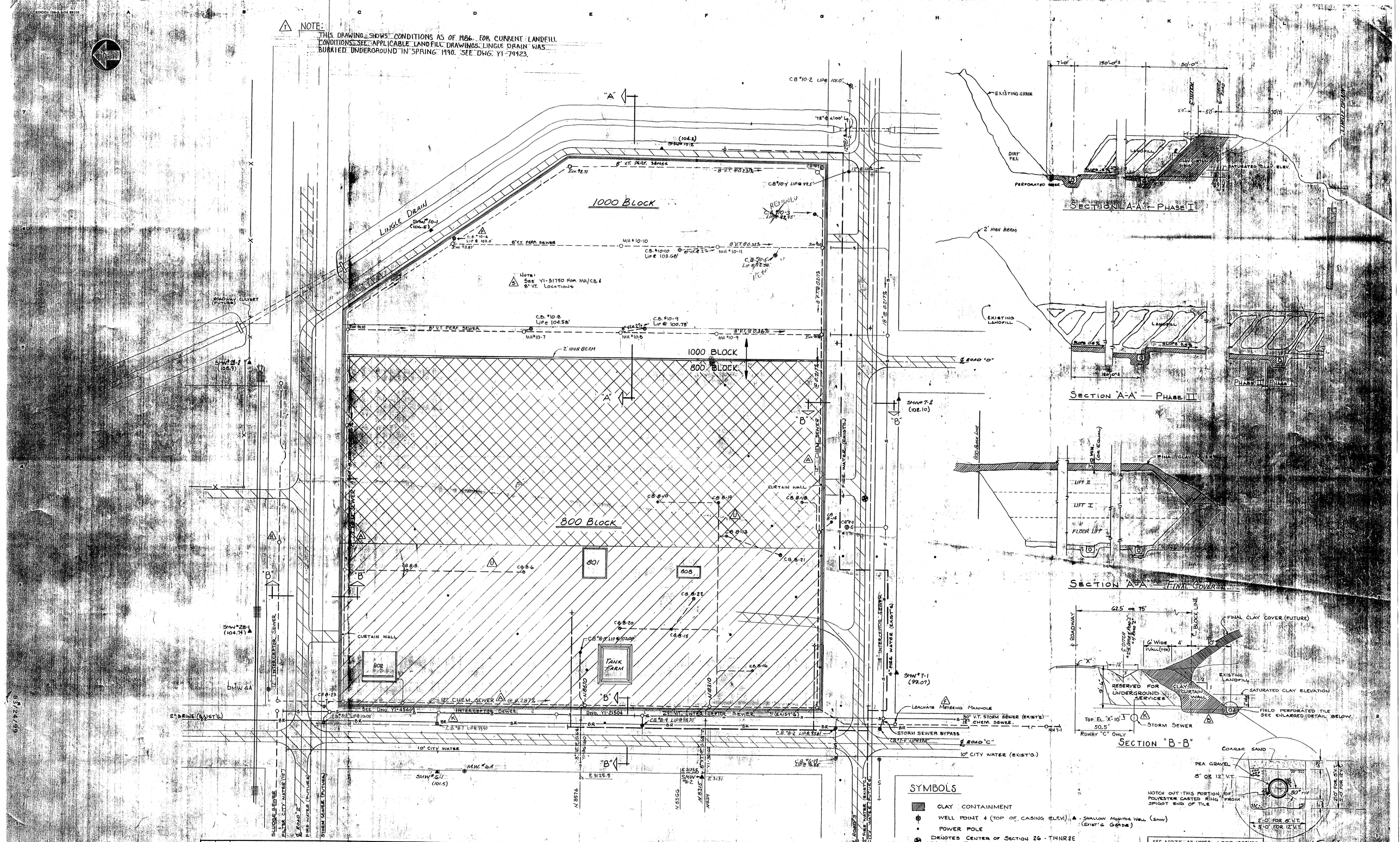

| | | |

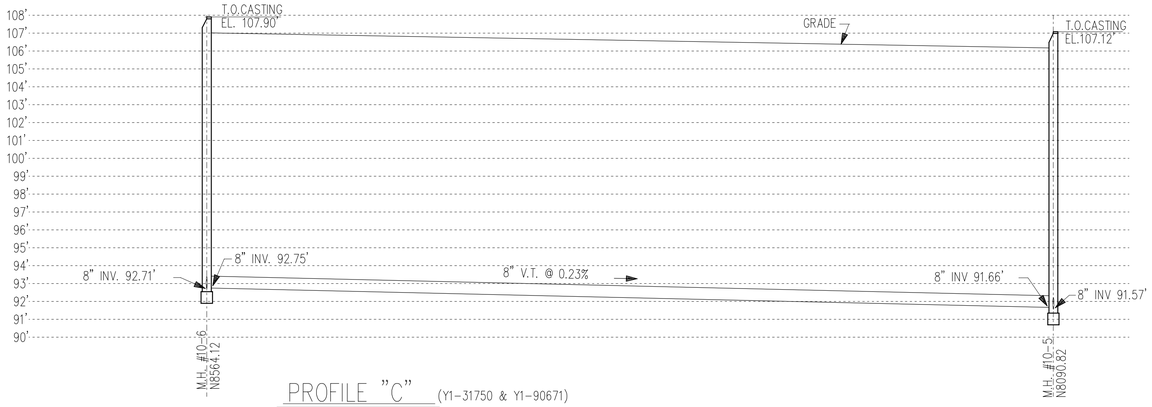

PROFILE "C" (Y1-31750 & Y1-90671)

SCALE: HOR. 1" = 40'
VERT. ¼" = 1'-0"

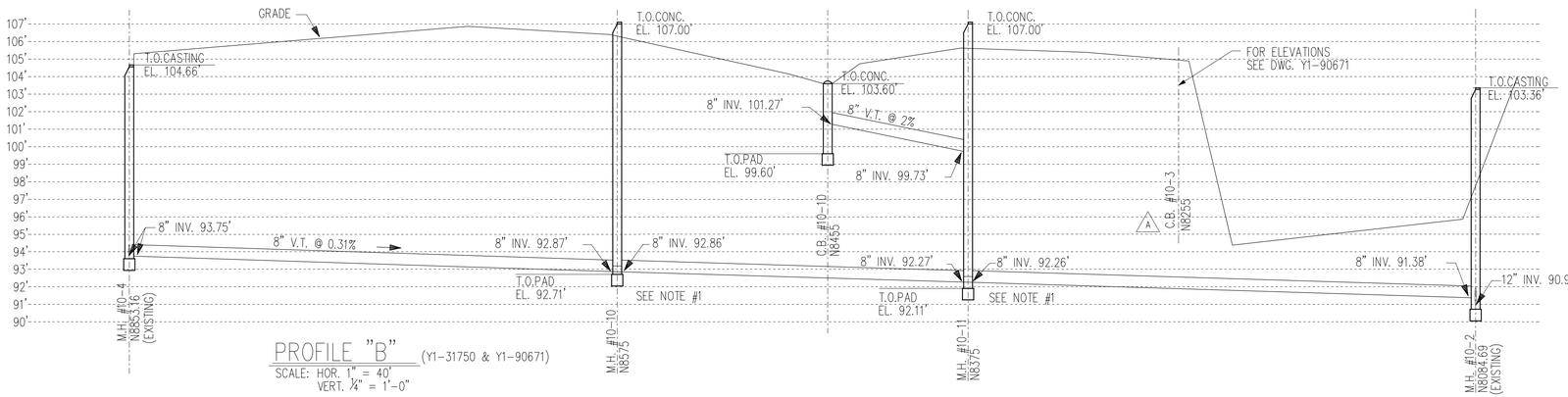

PROFILE "B" (Y1-31750 & Y1-90671)

SCALE: HOR. 1" = 40'
VERT. ¼" = 1'-0"

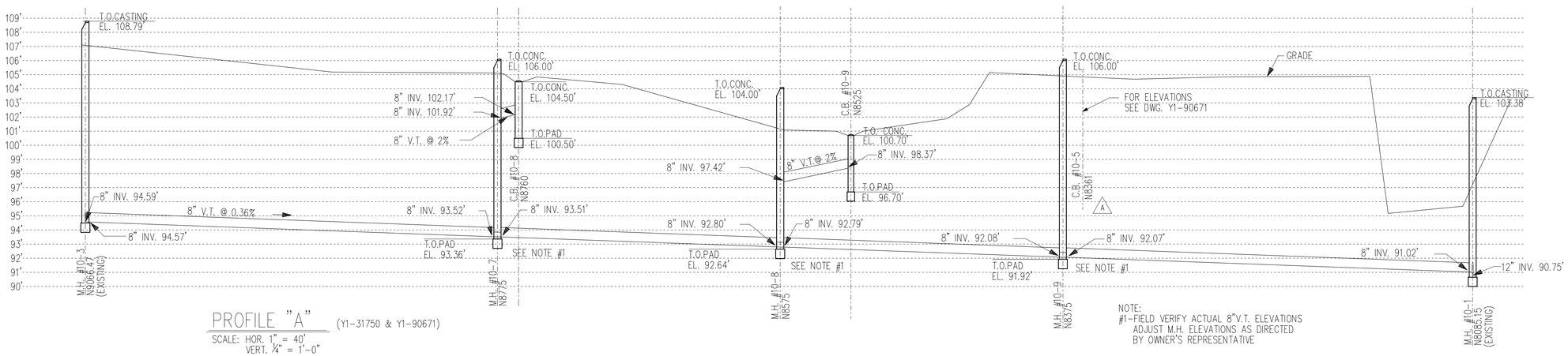

PROFILE "A" (Y1-31750 & Y1-90671)

SCALE: HOR. 1" = 40'
VERT. ¼" = 1'-0"

NOTE:
#1-FIELD VERIFY ACTUAL 8"V.T. ELEVATIONS
ADJUST M.H. ELEVATIONS AS DIRECTED
BY OWNER'S REPRESENTATIVE

NOTE:

THIS IS AN INSTALLATION DRAWING FOR THE LEACHATE COLLECTION SYSTEM. V.T. PIPE IN THIS APPLICATION WAS LAID WITH NOTCHED POLYESTER CAST RINGS ON SPIGOT END OF PIPE TO ALLOW FOR LEACHATE COLLECTION. PIPE WAS LAID IN 3'-0" WIDE DITCH WITH 6" BEDDING AND 6" COVER OF SPEC. M6-51 CONCRETE SAND.

GRADE PROFILE, TOP OF MANHOLEE, TOP OF CATCH BASINS AND LOCATION OF SOME OF CATCH BASINS HAVE BEEN CHANGED AS THE FILLING OF LANDFILL CONTINUES.

FOR CURRENT GRADE ELEVATION AND ACTIVE CATCH BASINS, SEE DWG. Y1-90671 – LANDFILL CONTOURS.

NOTE: PLANT ELEVATION 0.00' = 526.18' USGS

REFERENCE DWG'S.
Y1-29958
Y1-31750
Y1-36160
Y1-36778
Y1-90671

LAST GENERAL UPDATE: 04JAN2010

CADD

MARK	LOC.	REVISIONS	BY	DATE	APP
A	GEN	REVISED PROFILE "A" & "B"	RJF	27JUL89	PC
B	GEN	REVISED NOTE AND REFERENCE DWGS.	RJF	02MAR93	PC

DESIGNED J.L.VANDERMALE	DATE 06-10-86	DOW CORNING CORPORATION
DRAWN J.K.LAFAVE	DATE 06-11-86	LANDFILL 1000 BLOCK LEACHATE COLLECTION SYSTEM SEWER PROFILES
CHECKED J.L.VANDERMALE	DATE 06-17-86	
APPROVED R.G.COOK	DATE 06-24-86	SCALE INCH FOOT AS NOTED · DRAWING NUMBER Y1-23606 · REVISION B

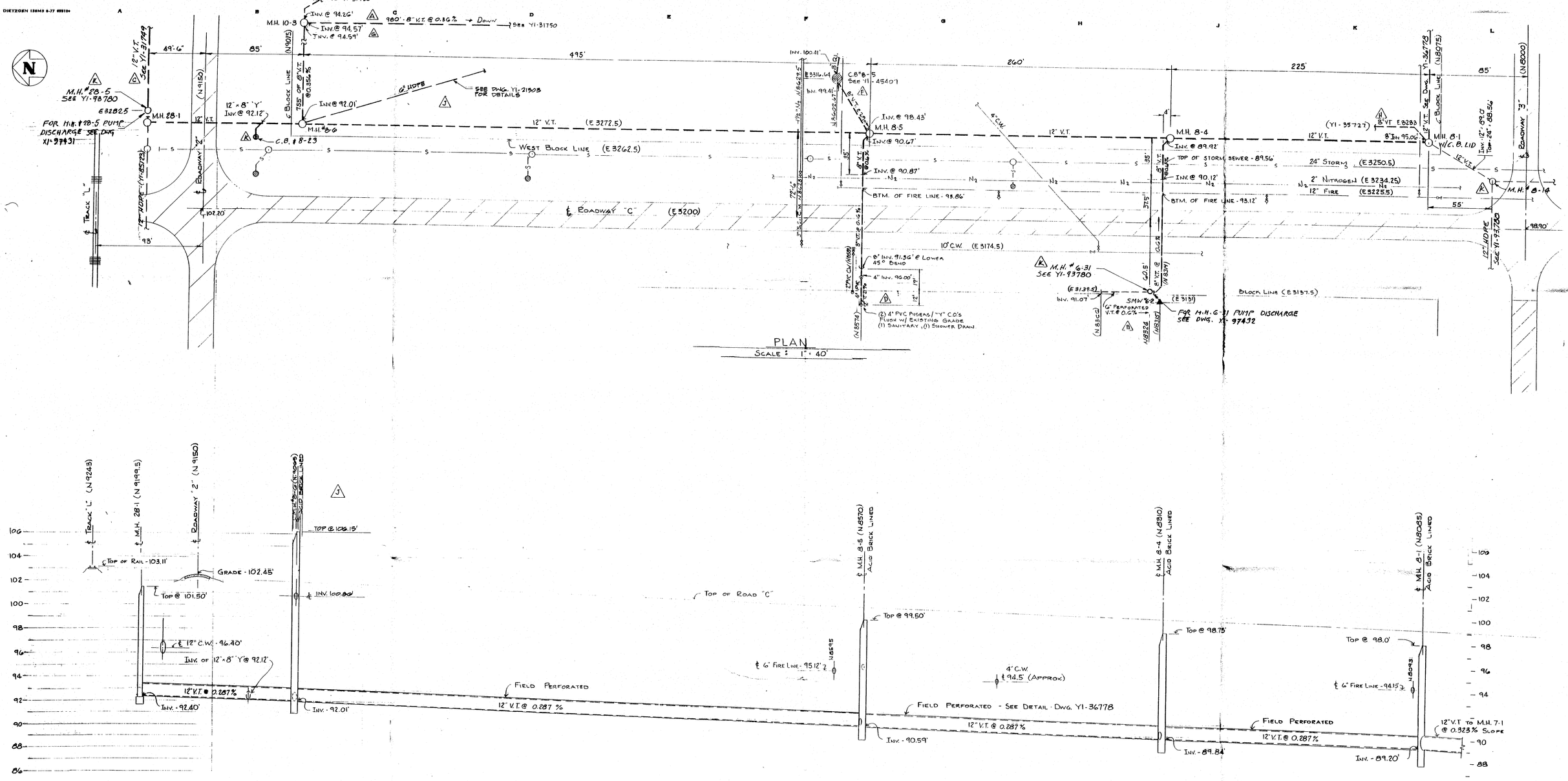

PLAN

SCALE : 1" = 40'

PROFILE
LOOKING EAST
SCALE : HORIZ. - 1" = 40'; VERT. - 1/4" = 1'-0"

| | | |

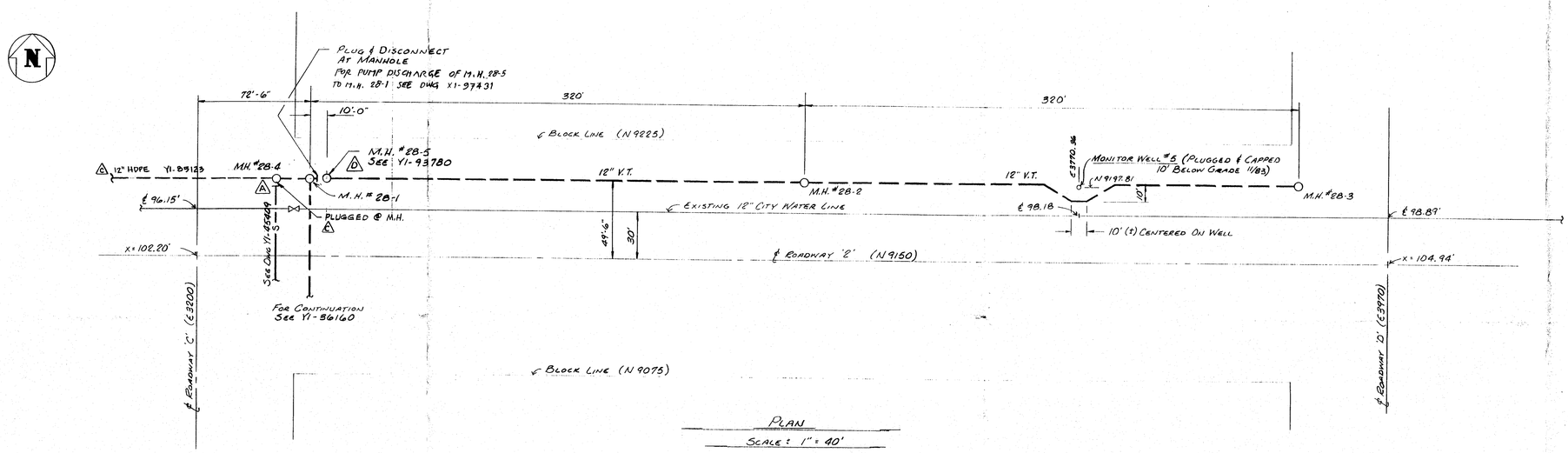

PLAN

SCALE: 1" = 40'

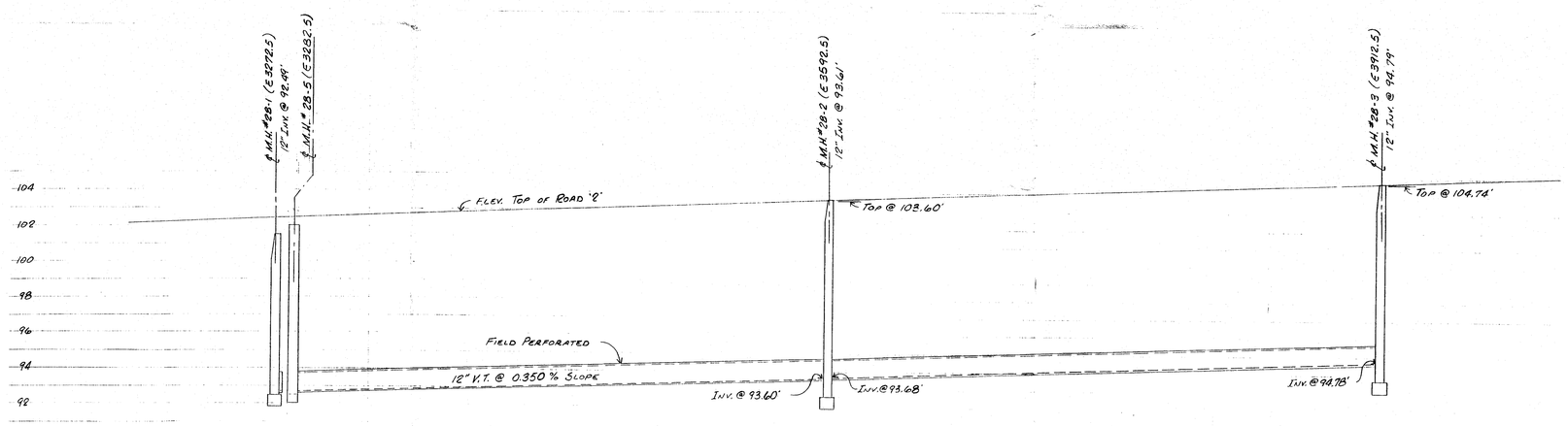

PROFILE

LOOKING NORTH

SCALE: HORIZ. 1" = 40', VERT. 1/4" = 1'

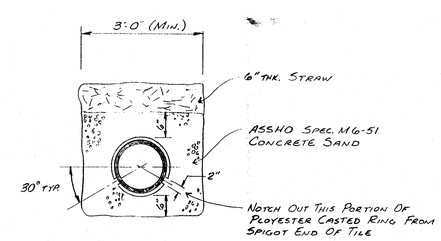

FIELD PERFORATION DETAIL

LOCATION	REVISIONS	BY	DATE	APP
A B-7	ADDED DIVERSION TO STORM SEWER	RJF	7-26-91	
B L-1	ADDED 2800 BLOCK TO TITLE BLOCK	RJF	7/6/89	RJF
C B-7	ADDED 12" HDPE, PLUGGED DIVERSION	JCL	6/17/91	
D B-7	ADDED M.H. # 28-5	RJF	9/16/92	P.C.

DESIGNED G.M. HAMBLIN DATE 7 JUNE 1983
DRAWN R.J. FORTIER DATE 9 JUNE 1983
CHECKED G. BARTOS
W. PAWLUNIUCK
APPROVED D. NUTTO 6/7/83

CROSS REFERENCE

DOW CORNING CORPORATION
MIDLAND • MICHIGAN

CHEMICAL SEWER 2800 BLK.
ROADWAY '2' - BETWEEN ROADS 'C' & 'D'
PLAN & PROFILE

SCALE: AS NOTED

Y1-31749

DIETZGEN 138M3 8-77 66510

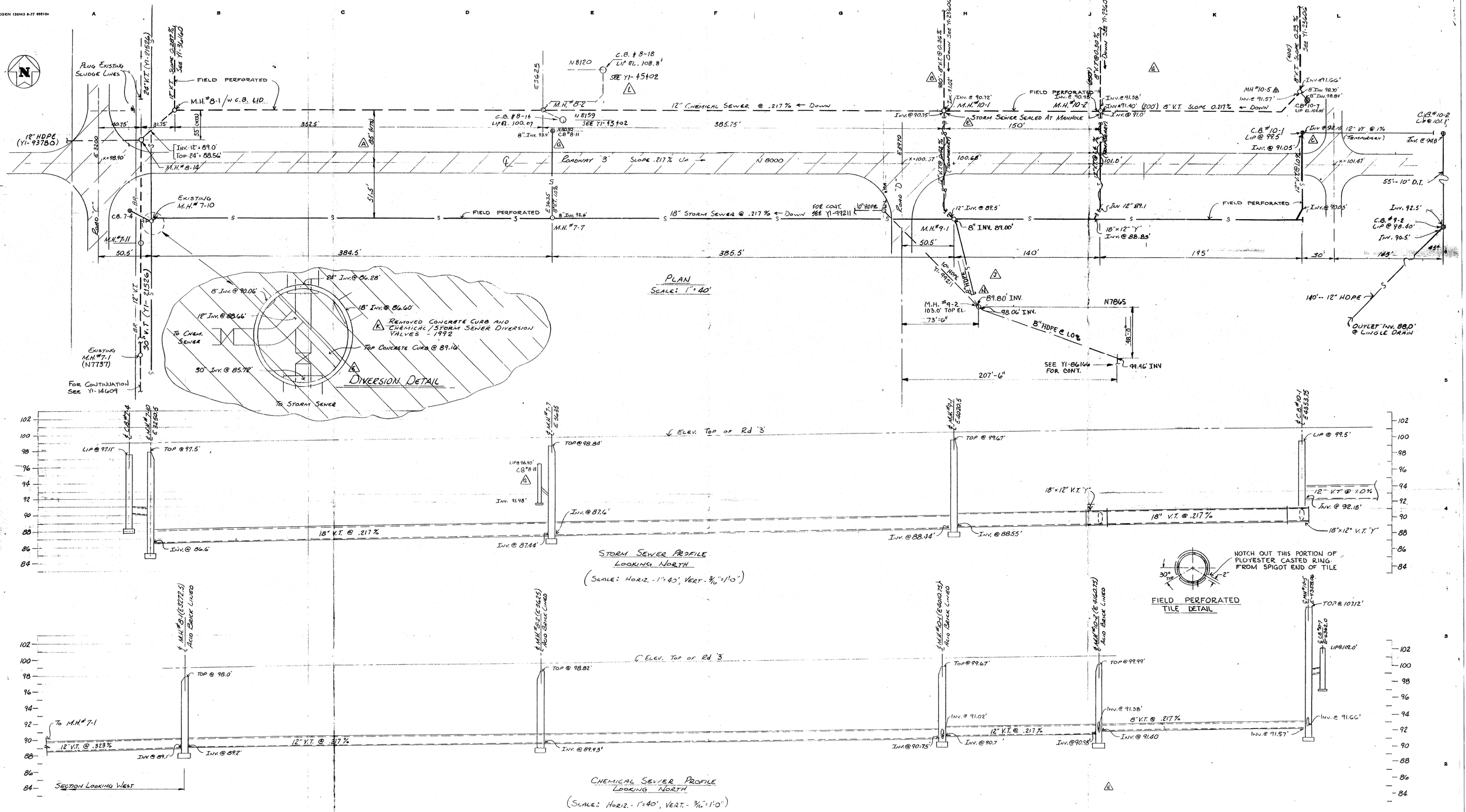

| | | |

DOW CORNING CORPORATION

MIDLAND PLANT LANDFILL

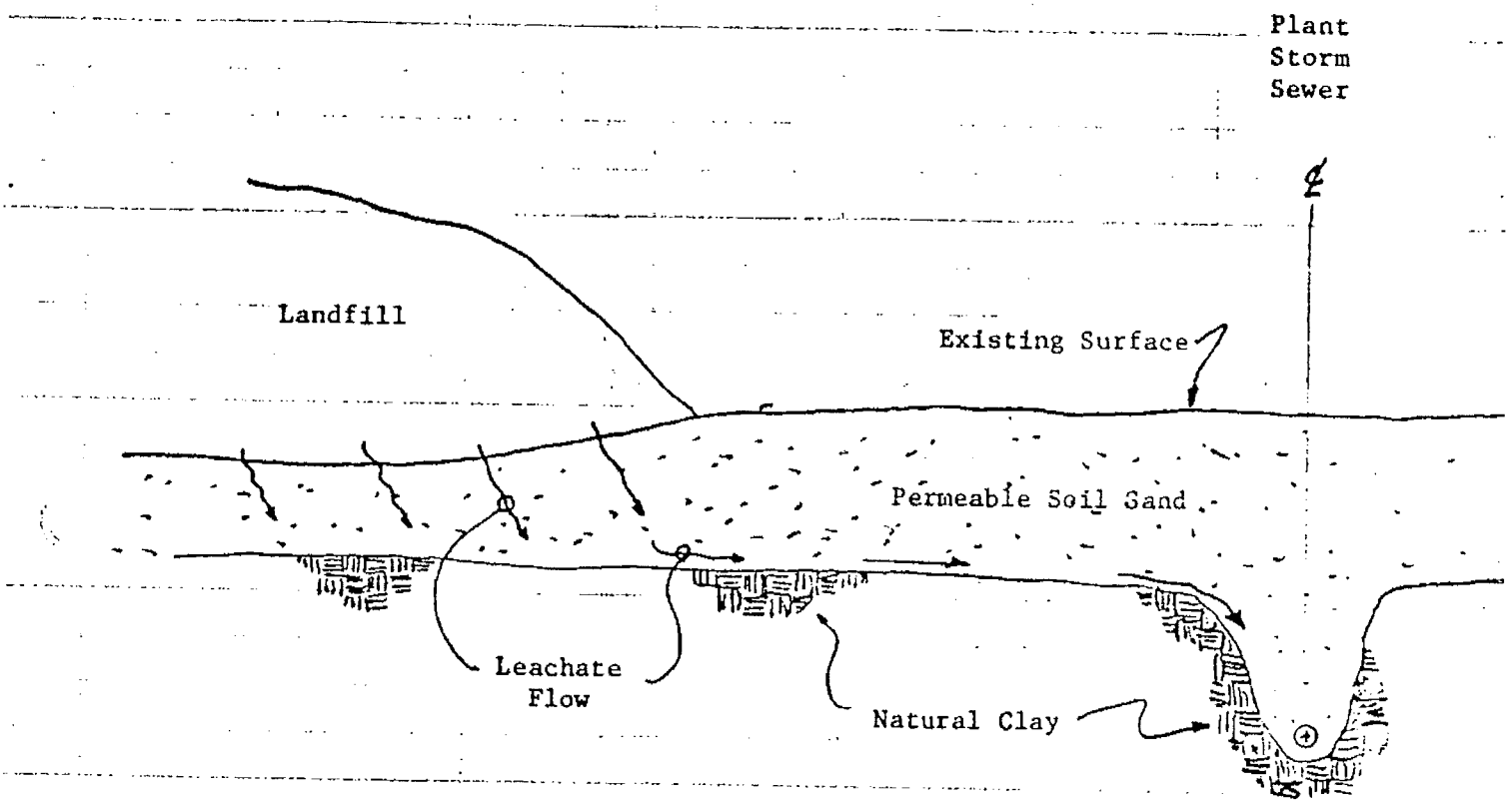

Soil Profile

Old Condition (1950 - 1980)

DOW CORNING CORPORATION

MIDLAND PLANT LANDFILL

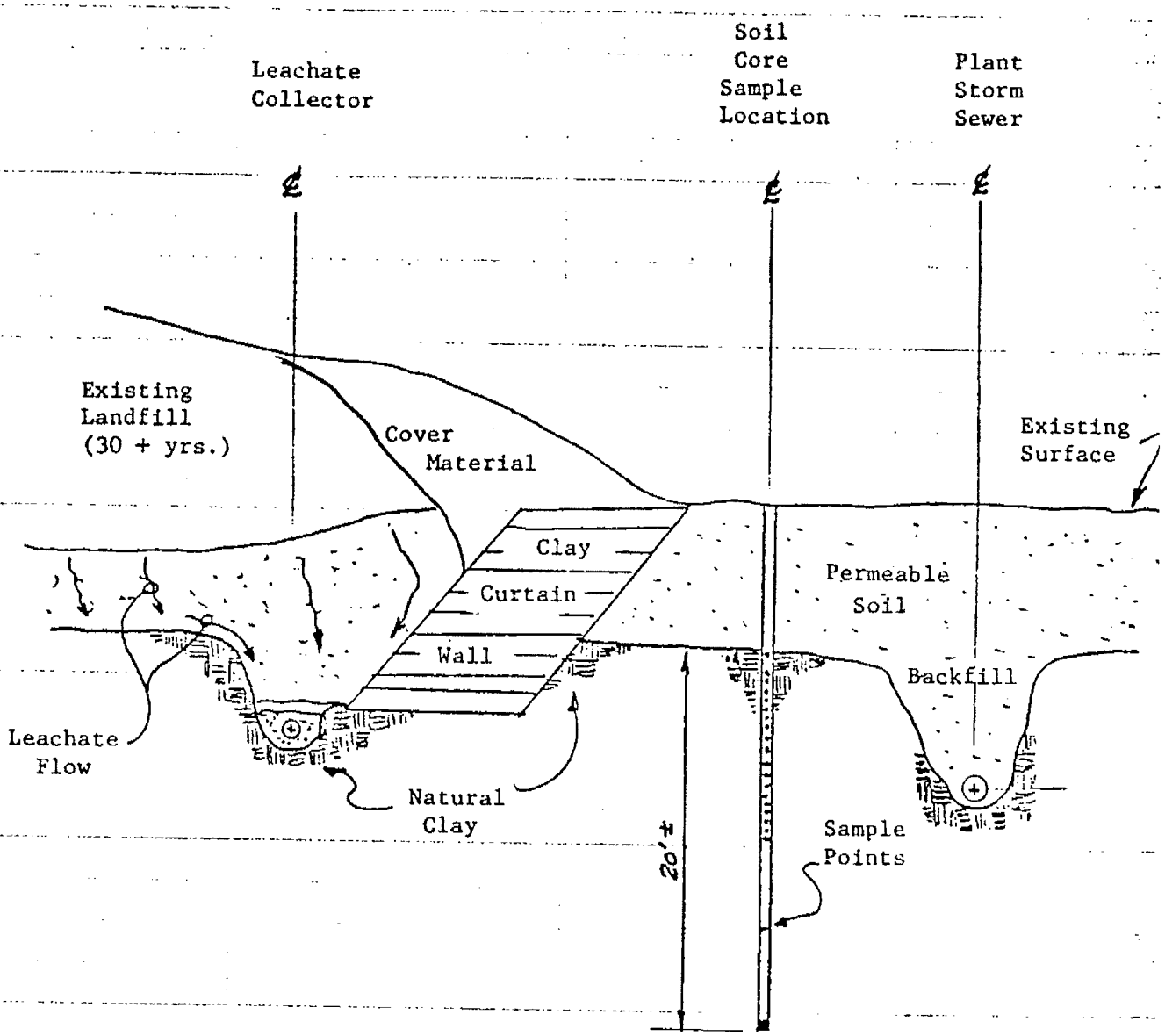

Soil Sampling Profile

Existing Condition (1980 - Present)

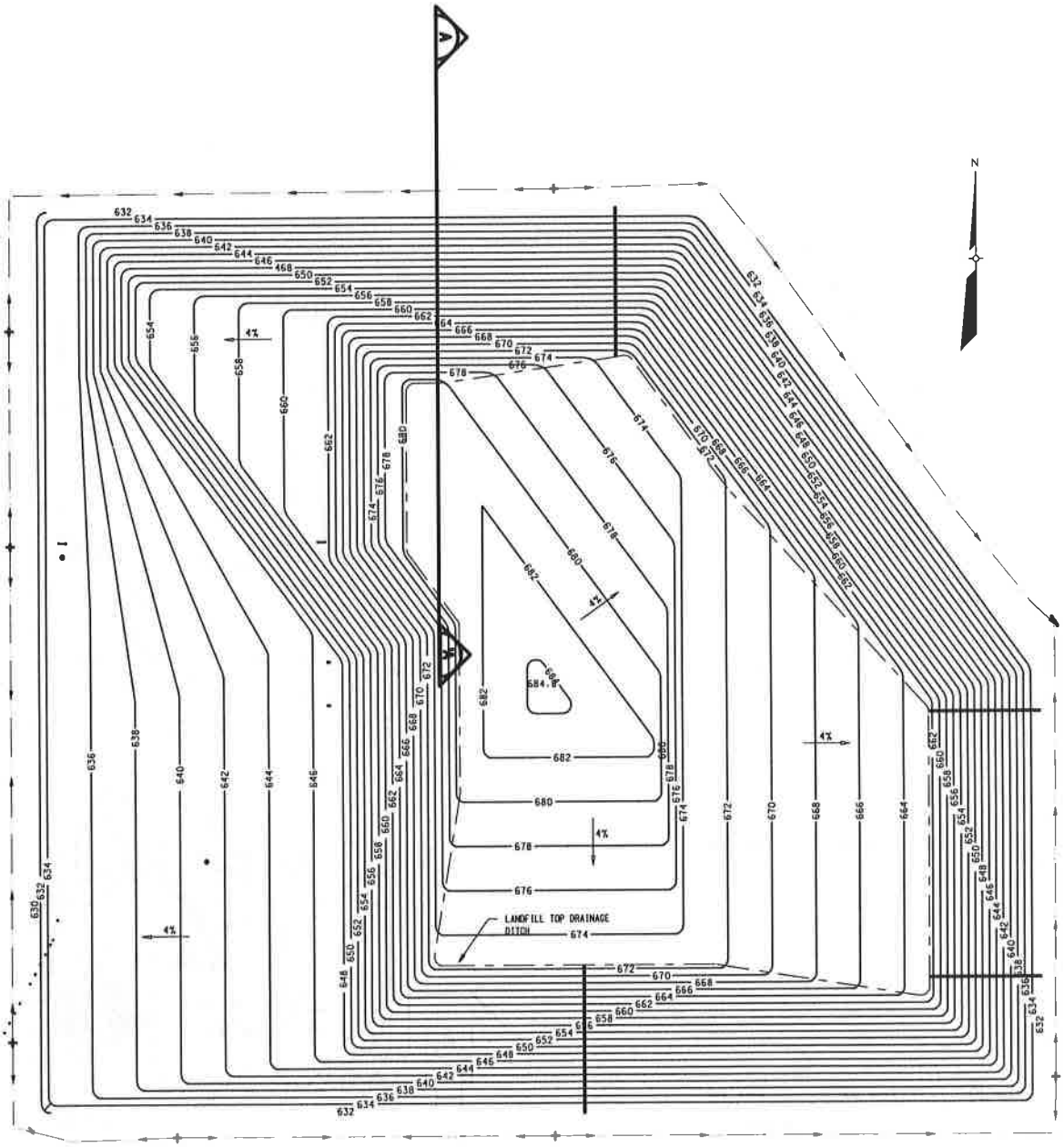

AECOM

FIGURE S1
SLOPE STABILITY
CROSS-SECTION
DOW CORNING CORPORATION
MIDLAND PLANT

MARCH 2011

PROJECT 60134827

L:\group\CADD\Dow Corning Midland\stabfig.dgn 3/24/2011

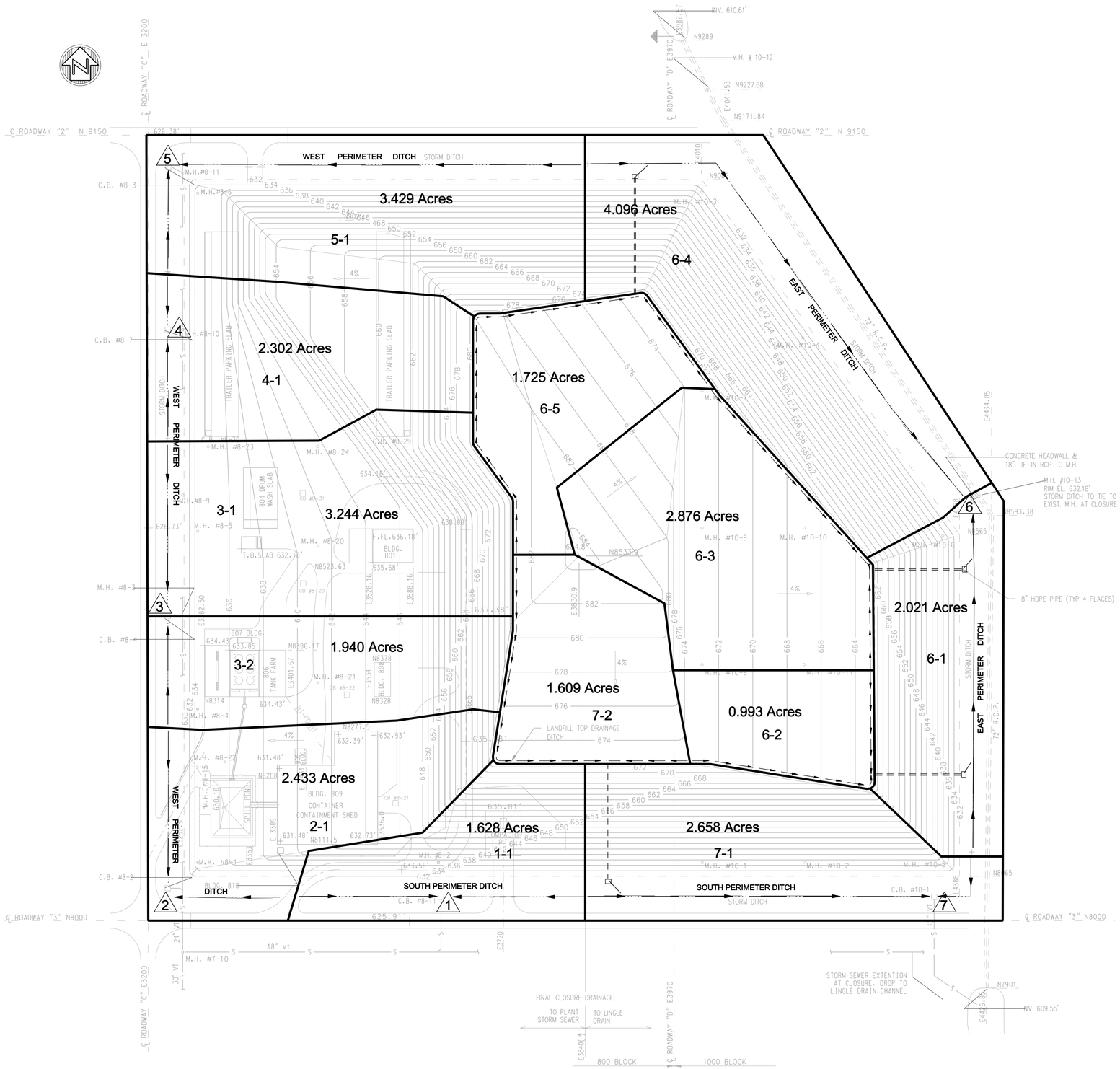

NOTES:

1. FINAL CONTOURS ARE BASED ON:
   A. TOTAL FILL VOLUME AT OR VERY CLOSE TO MAXIMUM LANDFILL VOLUME AS SPECIFIED IN LANDFILL CLOSURE PLAN DATED 5 – 1988.
   B. SIDE SLOPE = 4:1
      PLATEAU SLOPE = 4% MINIMUM
2. CONTOURS REPRESENT ELEVATION OF A CLOSURE CAP. ACTUAL ELEVATION OF FILL MATERIAL WILL BE 5.0' LOWER.

6 — SEDCAD STRUCTURE LOCATION/LABEL

6-3 — SUBWATERSHED LABEL (STRUCTURE # – SWS #)

PERIMETER DITCH AND FLOW DIRECTION

DIVERSION BERM AND FLOW DIRECTION

DOWNSLOPE PIPE AND ENERGY DISSIPATOR

NO	REVISIONS	DRN	CHK	DATE

Sheboygan, Wisconsin

DRN
DES
CHK
APP

Copyright © AECOM All Rights Reserved

AECOM

MIDLAND LANDFILL CLOSURE
DOW CORNING CORPORATION

SEDCAD LAYOUT

DATE MAY 2011

PROJECT NO 60134827

FILENAME Drainage Figure.dwg

SHEET NO

DRAWING NO **ATTACHMENT 5**

5/5/2011 11:25:29 AM
Pentable = mswaste-tbl
Server = USGRA01
L:\work\60134827\CADD\Drainage Figure.dwg