REVISIONS				
REV	DESCRIPTION	CHG. NO.	APP'D	DATE
AC				

OUTPUT CODE "A" (4–20MA / HART)
SAA ENTITY CONCEPT APPROVALS

THE ROSEMOUNT PRESSURE TRANSMITTERS LISTED BELOW ARE INTRINSICALLY SAFE WHEN USED IN THE CIRCUIT WITH SAA APPROVED BARRIERS WHICH MEET THE LISTED ENTITY PARAMETERS.

APPROVED TRANSMITTERS

3051C	3051H	3001C	2088
3051L	3051T	3001CL	2090P
3051P	3051CA	3001CH	2090F
		3001S	

ENTITY PARAMETER FOR Ex ia IIC T5 CLASS I, ZONE 0 PROTECTION:

APPARATUS PARAMETER	BARRIER PARAMETER
Vmax = 30V	Voc IS LESS THAN OR EQUAL TO 30V
Imax = 200mA	Isc IS LESS THAN OR EQUAL TO 200mA
Pmax = 0.9W	$\frac{Voc * Isc}{4}$ IS LESS THAN OR EQUAL TO 0.9W
Ci = 0.01μF	Ca IS GREATER THAN 0.01 MICROFARADS
Li = 10μH	La IS GREATER THAN 10 MICROHENRIES
FOR T1 OPTION ONLY	
Imax = 160mA	Isc IS LESS THAN OR EQUAL TO 160mA
Li = 1.05mH	La IS GREATER THAN 1.05 MILLIHENRIES

THE ENTITY CONCEPT ALLOWS INTERCONNECTION OF INTRINSICALLY SAFE APPARATUS NOT SPECIFICALLY EXAMINED IN COMBINATION AS A SYSTEM.

TO ASSURE AN INTRINSICALLY SAFE SYSTEM THE TRANSMITTER AND BARRIER MUST BE WIRED IN ACCORDANCE WITH THE BARRIER MANUFACTURERS FIELD WIRING INSTRUCTIONS AND THE CIRCUIT DIAGRAM SHOWN BELOW.

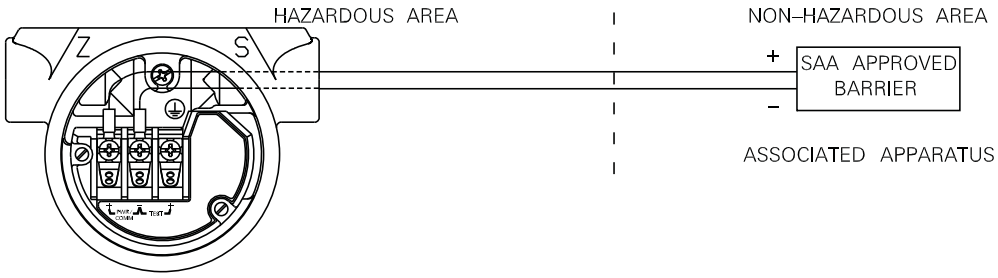

Rosemount Inc. 8200 Market Boulevard Chanhassen, MN 55317 USA			CAD MAINTAINED (MicroStation)	
DR. Mike Dobe	SIZE A	FSCM NO	DWG NO. 03031-1026	
ISSUED	SCALE N/A	WT. ———	SHEET 2 OF 4	

Form Rev AC

REVISIONS				
REV	DESCRIPTION	CHG. NO.	APP'D	DATE
AC				

OUTPUT CODE "M" (LOW POWER)
SAA ENTITY CONCEPT APPROVALS

THE ROSEMOUNT LOW POWER CONFIGURED PRESSURE TRANSMITTERS LISTED BELOW ARE SAA APPROVED AS INTRINSICALLY SAFE WHEN USED IN THE CIRCUIT WITH SAA APPROVED BARRIERS WHICH MEET THE LISTED ENTITY PARAMETERS.

APPROVED TRANSMITTERS WITH LOW POWER CONFIGURATION

3051C
3051L
3051P
3051H
3051T
3051CA

ENTITY PARAMETER FOR Ex ia IIC T5 CLASS I, ZONE 0 PROTECTION:

APPARATUS PARAMETER	BARRIER PARAMETER
Vmax = 30V	Voc IS LESS THAN OR EQUAL TO 30V
Imax = 200mA	Isc IS LESS THAN OR EQUAL TO 200mA
Pmax = 0.9W	$\frac{Voc * Isc}{4}$ IS LESS THAN OR EQUAL TO 0.9W
Ci = 0.042μF	Ca IS GREATER THAN 0.042 MICROFARADS
Li = 10μH	La IS GREATER THAN 10 MICROHENRIES
FOR T1 OPTION ONLY	
Li = 0.75mH	La IS GREATER THAN 0.75 MILLIHENRIES

THE ENTITY CONCEPT ALLOWS INTERCONNECTION OF INTRINSICALLY SAFE APPARATUS NOT SPECIFICALLY EXAMINED IN COMBINATION AS A SYSTEM.

TO ASSURE AN INTRINSICALLY SAFE SYSTEM THE TRANSMITTER AND BARRIER MUST BE WIRED IN ACCORDANCE WITH THE BARRIER MANUFACTURERS FIELD WIRING INSTRUCTIONS AND THE CIRCUIT DIAGRAM SHOWN BELOW.

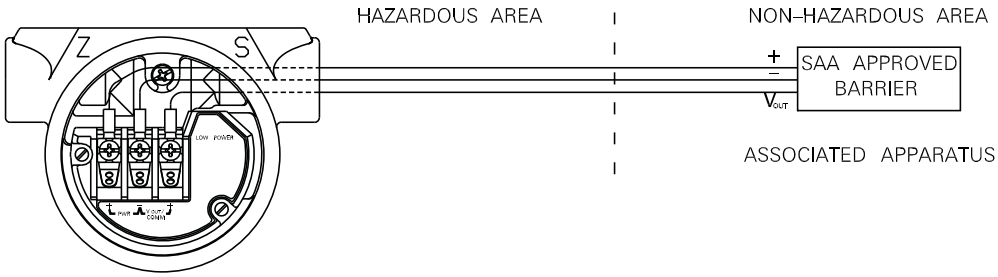

Rosemount Inc.
8200 Market Boulevard
Chanhassen, MN 55317 USA

CAD MAINTAINED (MicroStation)

DR. Mike Dobe	SIZE A	FSCM NO	DWG NO. 03031-1026	
ISSUED	SCALE N/A	WT. ———		SHEET 3 OF 4

Form Rev AC

REVISIONS				
REV	DESCRIPTION	CHG. NO.	APP'D	DATE
AC				

OUTPUT CODE F / W (FIELDBUS, PROFIBUS)
SAA ENTITY CONCEPT APPROVALS

THE ROSEMOUNT PRESSURE TRANSMITTERS LISTED BELOW ARE INTRINSICALLY SAFE WHEN USED IN THE CIRCUIT WITH SAA APPROVED BARRIERS WHICH MEET THE LISTED ENTITY PARAMETERS.

APPROVED TRANSMITTERS

3051C	3051H	3001C	3001S
3051L	3051T	3001CL	
3051P	3051CA	3001CH	

ENTITY PARAMETER FOR Ex ia IIC T5 CLASS I, ZONE 0 PROTECTION:

APPARATUS PARAMETER	BARRIER PARAMETER
Vmax = 30V	Voc IS LESS THAN OR EQUAL TO 30V
Imax = 300mA	Isc IS LESS THAN OR EQUAL TO 300mA
Pmax = 1.3W	$\frac{Voc * Isc}{4}$ IS LESS THAN OR EQUAL TO 1.3W
Ci = 0 μF	Ca IS GREATER THAN 0 MICROFARADS
Li = 0μH	La IS GREATER THAN 0 MICROHENRIES

THE ENTITY CONCEPT ALLOWS INTERCONNECTION OF INTRINSICALLY SAFE APPARATUS NOT SPECIFICALLY EXAMINED IN COMBINATION AS A SYSTEM.

TO ASSURE AN INTRINSICALLY SAFE SYSTEM THE TRANSMITTER AND BARRIER MUST BE WIRED IN ACCORDANCE WITH THE BARRIER MANUFACTURERS FIELD WIRING INSTRUCTIONS AND THE CIRCUIT DIAGRAM SHOWN BELOW.

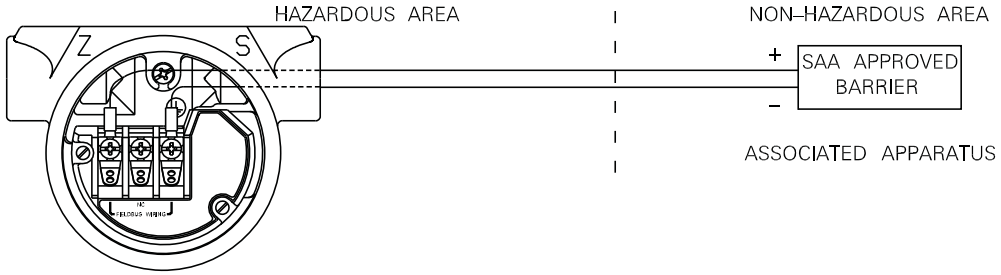

Rosemount Inc. 8200 Market Boulevard Chanhassen, MN 55317 USA			CAD MAINTAINED (MicroStation)	
DR. Mike Dobe	SIZE A	FSCM NO	DWG NO. 03031-1026	
ISSUED	SCALE N/A	WT. ———	SHEET 4 OF 4	

Form Rev AC

CONFIDENTIAL AND PROPRIETARY INFORMATION IS CONTAINED HEREIN AND MUST BE HANDLED ACCORDINGLY

REVISIONS

REV	DESCRIPTION	CHG. NO.	APP'D	DATE
G	ADD SHT 4&5, DELETE CLASS II &III	I. 636328	B.S.J.	08/01/90
H	ADD 3051 P/L/H, 3001C CL /CH	636904	K.D.V.	09/06/90
J	ADD SHT. 6, FIX TBL. 1.	638723	B.S.J.	01/02/91
K	ADD 3044C	641710	W.R.K.	06/13/91
L	ADD 3001S & SHT 7 FOR 3051C-LP	642380	G.E.M.	8/13/91
M	ADD 3095	653145	K.D.V.	4/8/93

THE ROSEMOUNT MODEL 268 SMART FAMILY INTERFACE IS APPROVED BY FACTORY MUTUAL AS INTRINSICALLY SAFE FOR THE CLASS I, DIVISION 1 GROUPS INDICATED WHEN USED IN CIRCUIT WITH THE BARRIERS AND CONVERTERS LISTED BELOW AND THE ROSEMOUNT SMART FAMILY TRANSMITTERS DEPICTED IN THE ACCOMPANYING CIRCUIT DIAGRAMS.

BARRIER MANUFACTURER	MODEL	APPROVED FOR CLASS I DIVISION 1, GROUPS
FOXBORO	2AI-I2V-FGB	A,B,C,D
	2AI-I3V-FGB	
	2AS-I3I-FGB	
	3A2-I2D-CS-E/FGB-A	
	3A2-I3D-CS-E/FGB-A	
HONEYWELL	38545-000-0110-113-F5B5	
	38545-000-0110-111/112-F5B5	C,D
MTL	115	A,B,C,D
	122	
	322	
	715	
	722	
R. STAHL	8901/31-199/100/7	
	8901/30-199/100/7	
	8901/31-280/165/7	C,D
	8901/30-280/165/7	C,D
	[8903/51-200/050/7	A,B,C,D
	[8901/31-086/150/7	A,B,C,D
	[8901/31-280/165/7	C,D
	[8901/31-086/150/7	C,D
	9005/01-245/060	A,B,C,D
	9005/01-252/100	A,B,C,D
TAYLOR	5850FL81200	C,D
	5851FL81200	
	1130FF21000	
	1130FF22000	
	1135FF21000	
	1135FF22000	

CAD Maintained, (MICROSTATION).

UNLESS OTHERWISE SPECIFIED DIMENSIONS IN INCHES [mm]. REMOVE ALL BURRS AND SHARP EDGES. MACHINE SURFACE FINISH 125

-TOLERANCE-
.X ± .1 [2.5]
.XX ± .02 [0.5]
.XXX ± .010 [0.25]
FRACTIONS ± 1/32
ANGLES ± 2°

DO NOT SCALE PRINT

CONTRACT NO.

DR. MIKE DOBE 2/7/90

CHK'D

APP'D. K.CARLSON 03/13/90

APP'D. GOVT.

ROSEMOUNT® MEASUREMENT
FISHER-ROSEMOUNT

ROSEMOUNT INC.
12001 TECHNOLOGY DRIVE
EDEN PRAIRIE, MN 55344 USA

TITLE INDEX OF I.S. BARRIER SYSTEMS FOR MOD. 268 SMART FAMILY INTERFACE

SIZE A | FSCM NO | DWG NO. 00268-0031

SCALE | WT. | SHEET 1 OF 7

REVISIONS				
REV	DESCRIPTION	CHG. NO.	APP'D	DATE
M		653145		

ENTITY CONCEPT APPROVALS

THE ENTITY CONCEPT ALLOWS INTERCONNECTION OF INTRINSICALLY SAFE APPARATUS TO ASSOCIATED APPARATUS NOT SPECIFICALLY EXAMINED IN COMBINATION AS A SYSTEM. THE APPROVED VALUES OF MAXIMUM OPEN CIRCUIT VOLTAGE (V_T OR V_{OC}) AND MAXIMUM SHORT CIRCUIT CURRENT (I_T OR I_{SC}) AND MAXIMUM OUTPUT POWER ($\frac{VOC \times ISC}{4}$ OR $\frac{V_T \times I_T}{4}$), FOR THE ASSOCIATED APPARATUS MUST BE LESS THAN OR EQUAL TO THE MAXIMUM SAFE INPUT VOLTAGE (V_{MAX}), MAXIMUM SAFE INPUT CURRENT (I_{MAX}) AND MAXIMUM SAFE INPUT POWER (P_{MAX}) OF THE INTRINSICALLY SAFE APPARATUS, IN ADDITION, THE APPROVED MAXIMUM ALLOWABLE CONNECTED CAPACITANCE (C_A) AND INDUCTANCE (L_A) OF THE ASSOCIATED APPARATUS MUST BE GREATER THAN THE MAXIMUM UNPROTECTED INTERNAL CAPACITANCE (C_I) AND INDUCTANCE $_I$ (L) OF THE INTRINSICALLY SAFE APPARATUS. THE APPROVED ENTITY CONCEPT PARAMETERS ARE AS FOLLOWS:
ARE AS FOLLOWS:

NOTE: ENTITY PARAMETERS LISTED APPLY ONLY TO ASSOCIATED APPARATUS WITH LINEAR OUTPUT.

INPUT PARAMETERS (CLASS I, DIV. 1, GROUPS A, B, C, D)				
VMAX = 32 VDC				V_T or Voc of barrier must be $\leq$ 32 Vdc
IMAX = 186 MA				I_T or Isc of barrier must be $\leq$ 186 mA
CI = 0.01 UF				C_A of barrier must be $\geq$ 0.01 μF
LI = 1.1 MH				L_A of barrier must be $\geq$ 1.1 mH
PMAX:	1.1W	0.8W	0.6W	$\frac{Voc \times Isc}{4}$ of barrier must be $\leq$ specified value.
TEMP CODE	T4A	T5	T6	

OUTPUT PARAMETERS
VOC = 1.5 VD.C.
ISC = 27 MA
C_A = 10,000 UF
L_A = 46 MH

ROSEMOUNT INC.
12001 TECHNOLOGY DRIVE
EDEN PRAIRIE, MN 55344 USA

CAD Maintained, (MICROSTATION).

DR. D.PEARSON	SIZE A	FSCM NO	DWG NO. 00268-0031	
ISSUED	SCALE N/A	WT. ———	SHEET 2 OF 7	

REVISIONS				
REV	DESCRIPTION	CHG. NO.	APP'D	DATE
M		653145		

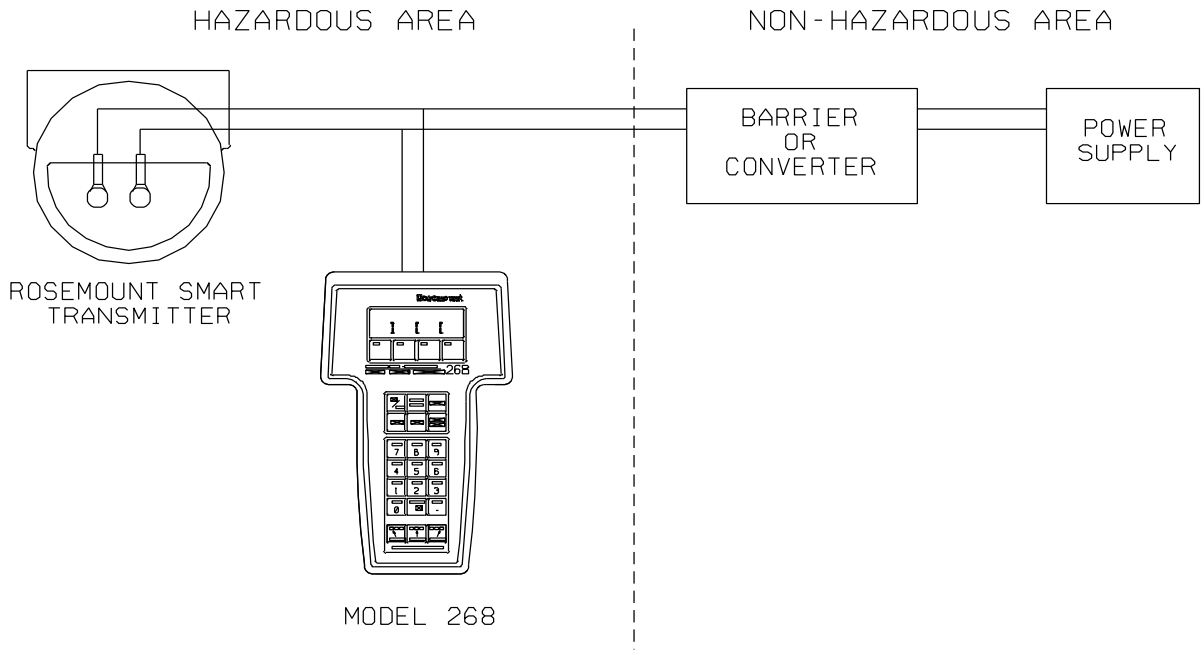

ROSEMOUNT SMART TRANSMITTERS

MODEL	1151 SMART
MODEL	3051
MODEL	3051C, 3051P, 3051L, 3051H, 3051CA
MODEL	3044
MODEL	3044C
MODEL	3001C, 3001CL, 3001CH
MODEL	3311
MODEL	3001S, 3001SL, 3001SH
MODEL	3095

UP TO FOUR MODEL 751 INDICATORS MAY BE WIRED IN SERIES WITH THE TRANSMITTERS SHOWN ABOVE AND MAY BE LOCATED IN EITHER THE HAZARDOUS OR NON-HAZARDOUS AREA

ROSEMOUNT INC.
12001 TECHNOLOGY DRIVE
EDEN PRAIRIE, MN 55344 USA

CAD Maintained, (MICROSTATION).

DR. D.PEARSON	SIZE A	FSCM NO	DWG NO. 00268-0031
ISSUED	SCALE N/A	WT. ———	SHEET 3 OF 7

REVISIONS				
REV	DESCRIPTION	CHG. NO.	APP'D	DATE
M		653145		

THE MAXIUM ALLOWABLE CONNECTED INDUCTANCE (La) OF THE ASSOCIATED APPARATUS IS DETERMINED BY ADDING 27 mA TO THE Isc OF THE BARRIER (Im=Isc + 27mA AND ENTERING TABLE 1 (SHT 5) AT THE RESULTING VALUE, Im, OR THE NEXT HIGHER VALUE OF Im, TO DETERMINE THE La, (THE La MUST INCLUDE THE L_1 OF THE MODEL 268, WHICH IS 1.1mH).

EXAMPLE #1: Isc OF BARRIER = 100mA.

Im = 100mA + 27mA = 127mA

ENTER TABLE AT Im = 130mA; La = 2.0mH

--WARNING-- BEFORE CONNECTING THE MODEL 268 INTO THE LOOP, DETERMINE THE CONNECTED INDUCTANCE OF THE SYSTEM BY ADDING THE L_1 OF THE TRANSMITTER, CABLE, AND MODEL 268. THE SUM MUST BE LESS THAN THE La DETERMINED FROM THE TABLE IN ORDER FOR THE MODEL 268 TO BE CONNECTED INTO THE LOOP. IF THE CONNECTED INDUCTANCE IS GREATER THAN THE VALUE DETERMINED FROM THE TABLE, A BARRIER WITH A LOWER Isc MUST BE CHOSEN.

EXAMPLE #2: BARRIER ISC = 41.8mA; BARRIER LA = 20.0mH

IM = 41.8mA + 27mA = 68.8mA;

ENTER TABLE AT 70mA AND READ La = 7.5mH

ADD CONNECTED INDUCTANCE OF SYSTEM:

MODEL 268	L_1 = 1.1mH
MODEL 3051 TRANSMITTER	L_1 = 0.48mH
INDUCTANCE OF LOOP WIRING	1.0mH
TOTAL CONNECTED INDUCTANCE	= 2.58mH

TOTAL CONNECTED INDUCTANCE IS LESS THAN La = 7.5 mH AS DETERMINED ABOVE AND IS ALSO LESS THAN THE BARRIER La. THE MODEL 268 MAY SAFELY BE CONNECTED INTO THE LOOP. IF THE MODEL 751 INDICATORS ARE USED, THEIR TOTAL INDUCTANCE (LABEL VALUE * NUMBER OF INDICATORS) MUST ALSO BE INCLUDED.

ROSEMOUNT INC.
12001 TECHNOLOGY DRIVE
EDEN PRAIRIE, MN 55344 USA

CAD Maintained, (MICROSTATION).

DR. S.BARDUSON 30JUL90	SIZE A	FSCM NO	DWG NO. 00268-0031
ISSUED	SCALE N/A	WT.	SHEET 4 OF 7

REVISIONS				
REV	DESCRIPTION	CHG. NO.	APP'D	DATE
M		653145		

Im (mA)	La ()mH)
150	1.3
145	1.5
140	1.6
130	2.0
120	2.5
110	3.0
100	4.0
90	5.0
85	5.5
80	6.0
75	6.7
70	7.5
65	8.8
62	9.5
60	10.0
57	11.0
55	12.0
50	15.0
45	19.0
40	23.0
35	31.0

TABLE 1

ROSEMOUNT INC.
12001 TECHNOLOGY DRIVE
EDEN PRAIRIE, MN 55344 USA

CAD Maintained, (MICROSTATION).

DR. S.BARDUSON 30JUL90

SIZE A | FSCM NO | DWG NO. 00268-0031

ISSUED

SCALE N/A | WT. ——— | SHEET 5 OF 7

REVISIONS				
REV	DESCRIPTION	CHG. NO.	APP'D	DATE

TAYLOR 1152FZ81110 SYSTEM

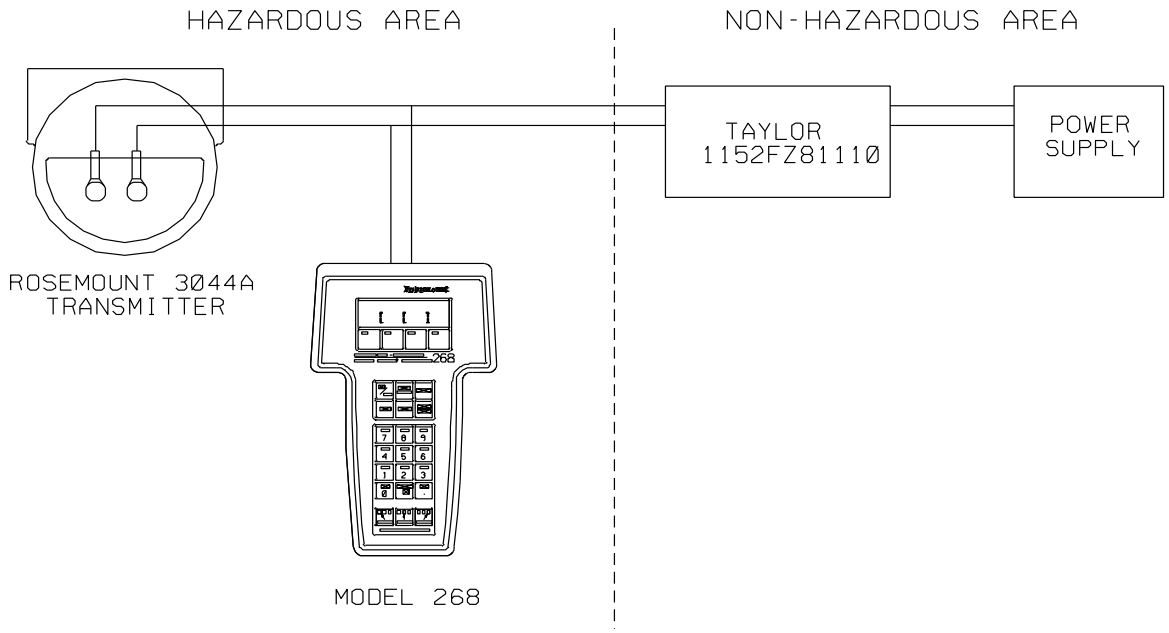

ROSEMOUNT 3044A SMART TRANSMITTERS MAY BE PLACED IN A CLASS I, DIVISION I, GROUP A, B, C, D HAZARDOUS LOCATION AS SHOWN ABOVE. THE LOOP POWER IS LIMITED BY A TAYLOR 1152FZ81110 INTRINSIC SAFETY BARRIER. THE ROSEMOUNT 268 MAY ALSO BE CONNECTED IN THE LOOP AS SHOWN. FOR CABLE WITH CAPACITANCE OF 60 PF/FT OR LESS AND INDUCTANCE OF .2 UH/FT OR LESS; CABLE LENGTHS OF UP TO 1600 FEET ARE ALLOWED .

TRANSMITTER: ROSEMOUNT 3044A
BARRIER: TAYLOR 1152FZ81110
COMMUNICATOR: ROSEMOUNT 268
CABLE: CMAX = 60 PF/FT
LMAX = .2 UH/FT
MAX. LENGTH = 1600 FT

ROSEMOUNT INC.
12001 TECHNOLOGY DRIVE
EDEN PRAIRIE, MN 55344 USA

CAD Maintained, (MICROSTATION).

DR. C. SCRIBNER 12/21/90	SIZE A	FSCM NO	DWG NO. 00268-0031
ISSUED	SCALE N/A	WT. ———	SHEET 6 OF 7

REVISIONS				
REV	DESCRIPTION	CHG. NO.	APP'D	DATE
M		653145		

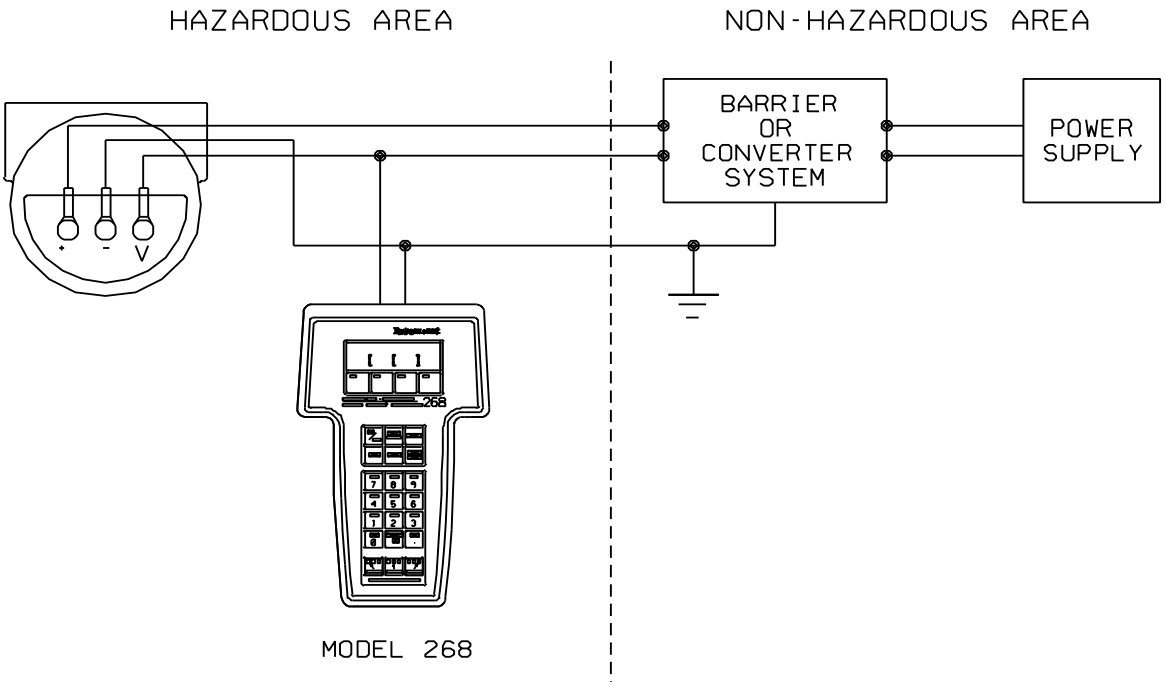

CONNECTION FOR LOW POWER VERSIONS
OF THE FOLLOWING
ROSEMOUNT SMART TRANSMITTERS

MODEL 3051C, 3051P, 3051L, 3051H, 3051CA
MODEL 3001C, 3001CL, 3001CH
MODEL 3001S, 3001SL, 3001SH

ROSEMOUNT INC.
12001 TECHNOLOGY DRIVE
EDEN PRAIRIE, MN 55344 USA

CAD Maintained, (MICROSTATION).

DR. SANDI MANSON 8/8/91

ISSUED

SIZE	FSCM NO	DWG NO.
A		00268-0031

SCALE N/A WT. ——— SHEET 7 OF 7

Index

A
Address
Changing 3-25
Alarm 3-18
Burst mode values 3-18
Configuration procedure . 2-16
Failure mode 3-17
Level verification 3-18
Multidrop mode values . . 3-18
Analog output trim 4-7
Approval
Drawings
Canadian Standards Association B-20
Factory Mutual B-7
Standards Association Australia . . B-29
Information B-1
Approval drawings B-7

B
Basic setup 3-9
Bench hook-up 3-3
Block diagram 1-3
Board, electronics 2-16
Bolts
Configurations 2-9
Installation 2-8
Material 2-8
Brackets
Mounting 2-6
Bubbler Liquid Level Measurement 2-32
Bubbler System in Open Vessel 2-32
Liquid Level Measurement 2-32
Burst mode
Advanced functions 3-22
Alarm and saturation values 3-18

C
Calibration 4-2
Choosing a procedure . . . 4-6
Frequency, determining . . 4-4
Full trim 4-11
Recal factory trim
Analog output 4-9
Sensor trim 4-12
Sensor trim 4-10
Tasks 4-3
Zero trim 4-11
Certifications B-1
Cloning 3-20
Closed Vessels
Dry Leg Condition 2-30
Liquid Level Measurement 2-30
Wet Leg Condition 2-31
Communicator 5-5
Compensating line pressure . 4-13
Configuration 3-1
Applying a user configuration . 3-22
Bolts 2-9
Cloning 3-20
Data review 3-4
LCD display
Custom 3-15
LCD meter 3-14
Recalling 3-20
Reusable copy 3-21
Saving 3-20
Considerations
Compatibility 2-2
Draft range 2-3
Environmental 2-3
General 2-2
Mechanical 2-3
Curr Fixed 5-4
Curr Saturd 5-4
Custom configuration
LCD display 3-15

D
Damping 2-3, 3-13
Detailed setup 3-17, 3-18
Diagnostics
Messages 5-4
Curr Fixed 5-4
Curr Saturd 5-4
Error 5-3
Fail 5-3
Fail Config 5-3
Fail Elect 5-3
Fail Module 5-3
HART Communicator 5-5
Local Dsbld 5-5
Loop test 5-4
Operation 5-4
Press Limit 5-4
Span Fail 5-4
Span Pass 5-4
Temp Limit 5-4
Warnings 5-3
Write protect 5-5
Zero Fail 5-4
Zero Pass 5-4
Diagnostics and service 3-18
Loop
Test 3-19
Transmitter test 3-18
Diagrams
Bench hook-up 3-3
Low power 3-3
Multidrop network 3-24
Typical multidrop network 3-24
Digital to analog trim 4-7
Other scale 4-8
Disassembly
Before disassembling 5-8
Remove electronics board .5-9
Remove from service 5-8
Sensor module 5-9
Disassembly procedures 5-8
Draft Range 2-3
Draft range 2-3
Damping 2-3
Installation 2-3
Process noise 2-3
Side filtering 2-3
Drawings
Approval B-7
Canadian Standards Association B-20
Factory Mutual B-7
Standards Association of Australia . B-29
Dry Leg Condition
Liquid Level Measurement 2-30

E
Electrical Installation Considerations
Grounding 2-18
Signal and Test Terminals 2-18
Wiring 2-18
Electronics board 2-16
Low power 2-16
Environmental Considerations 2-24
Environmental considerations .2-3
Error 5-3

F
Fail 5-3
Config 5-3
Elect 5-3
Module 5-3
Failure mode
Alarm values 3-17
Saturation values 3-17
Features 1-1

Filtering
Draft range 2-3
Foundation fieldbus 1-2
Full trim 4-11

G
Grounding 2-18
Transmitter Case 2-22

H
HART Communicator
Diagnostics 5-5
Hazardous Locations 2-26
Housing
Remove 5-9

I
Impulse piping 2-10
Installation 2-1, 2-5
Bolts 2-8
Cover 2-5
Draft range 2-3
Environmental Considerations 2-24
Examples 2-11
HART flowchart 2-4
Hazardous Locations . . . 2-26
Housing rotation 2-14
Mechanical considerations 2-3
Model 305 manifold 2-25
Model 306 manifold 2-25
Mounting 2-5
Brackets 2-6
Process Flange Orientation 2-5
Signal Wiring Grounding 2-21
Introduction 1-1

J
Jumper
Alarm 2-15
Security 2-15

L
LCD display
Custom configuration . . . 3-15
LCD meter 3-14
Configuration 3-14
Options 3-15
Lightning 2-20
Line pressure
Compensating 4-13
Liquid Level Measurement
Bubbler System in Open Vessel 2-32
Closed Vessels 2-30
Dry Leg Condition 2-30
Open Vessels 2-30
Wet Leg Condition 2-31
Local Dsbld 5-5
Loop
Setting to manual 3-2
Test 5-4
Loop test 3-19
Low power
Diagrams 3-3
Electronics board 2-16
Menu tree 3-6

M
Maintenance 4-1
Manifold installations 2-25
Manual
Models covered 1-2
Use of 1-1
Mechanical considerations . . . 2-3
Menu tree
Low power 3-6
Meter, LCD display 3-15
Model 275 HART Communicator 3-6
Mounting
Installation 2-5
Requirements 2-10
Multidrop communication . . . 3-18
Advanced functions 3-24
Communicating 3-25
Diagram 3-24

N
NAMUR-compliant values . . 3-17
Noise
Draft range 2-3

O
Open Vessels
Liquid Level Measurement 2-30
Operation 4-1, 5-4
Block diagram 1-3
Options
LCD meter 3-15
Ordering Information
Model 3051C A-24
Output
Process variables 3-8
Recal factory trim 4-9
Sensor temperature 3-8
Transfer function 3-9

P
Parts list A-42
Piping, impulse 2-10
Press Limit 5-4
Process
Connections 2-12
Process variables 3-8
Units 3-9
Product certifications B-1

R
Reassembly
Attaching sensor module . 5-10
Installing terminal block . . 5-10
Process sensor body . . . 5-10
Recall factory trim
Analog output 4-9
Sensor trim 4-12
Recalling 3-20
Rerange 3-10
AMS only 3-13
HART Communicator only 3-11
Pressure input source
With HART Communicator 3-12
With local zero and span 3-12
Returning products and materials 5-11
Reusable copy 3-21

S
Saturation
Burst mode values 3-18
Failure mode 3-17
Multidrop mode values . . 3-18
Saving a configuration 3-20
Security 2-15
Sensor
Module
Installing 5-10
Removing 5-9
Sensor Temperature 3-8
Sensor temperature 3-8
Sensor trim 4-10
Service and Diagnostics 3-18
Service Support 1-1
Setup
Basic 3-9
Detailed 3-17, 3-18
Signal Wiring Grounding 2-21
Software
Lock out 2-15
Span
Button 2-15
Fail 5-4
Pass 5-4
Spare parts list A-42
Support 1-1

T

Temp limit 5-4
Terminal block
    Installing 5-10
Terminal Side 2-5
Test 3-18
Transfer function 3-9
Transmitter Case 2-22
Transmitter test 3-18
Trim
    Analog output 4-7
    Digital to Analog 4-7
        Other scale 4-8
    Full 4-11
    Recall factory
        Analog output 4-9
        Sensor trim 4-12
    Sensor 4-10
    Zero 4-11
Troubleshooting
    Reference table 5-2

U

Units,Process variable 3-9

V

Vessels
    Open/Closed 2-30

W

Warnings 5-3
Wet Leg Condition
    Example (Figure 4-6) . . . 2-31
    Liquid Level Measurement 2-31
Wiring 2-18
    Diagrams
        Bench hook-up 3-3
        Low power 3-3
    Signal Terminals 2-18
    Test Terminals 2-18
Write protect 2-15, 5-5

X

Xmtr Info 5-4

Z

Zero
    Button 2-15
    Fail 5-4
    Pass 5-4
Zero trim 4-11

Rosemount 3051

Reference Manual
00809-0100-4001, Rev HA
November 2009

Standard Terms and Conditions of Sale can be found at www.rosemount.com/terms_of_sale
The Emerson logo is a trademark and service mark of Emerson Electric Co.
Rosemount. the Rosemount logotype, and SMART FAMILY are registered trademarks of Rosemount Inc.
Coplanar is a trademark of Rosemount Inc.
Halocarbon is a trademark of the Halocarbon Products Corporation.o.
Fluorinert is a registered trademark of Minnesota Mining and Manufacturing Company Corporation
Syltherm 800 and D.C. 200 are registered trademarks of Dow Corning Corporation.
Neobee M-20 is a registered trademark of PVO International, Inc.
HART is a registered trademark of the HART Communication Foundation.
Foundation fieldbus is a registered trademark of the Fieldbus Foundation.
All other marks are the property of their respective owners.

© 2009 Rosemount, Inc. All rights reserved.

Emerson Process Management
Rosemount Measurement
8200 Market Boulevard
Chanhassen MN 55317 USA
Tel (USA) 1 800 999 9307
Tel (International) +1 952 906 8888
Fax +1 952 949 7001

Emerson Process Management
GmbH & Co.
Argelsrieder Feld 3
82234 Wessling
Germany
Tel 49 (8153) 9390
Fax 49 (8153) 939172

Emerson Process Management Asia
Pacific Private Limited
1 Pandan Crescent
Singapore 128461
T (65) 6777 8211
F (65) 6777 0947
Enquiries@AP.EmersonProcess.com

Beijing Rosemount Far East
Instrument Co., Limited
No. 6 North Street,
Hepingli, Dong Cheng District
Beijing 100013, China
T (86) (10) 6428 2233
F (86) (10) 6422 8586

00809-0100-4001 Rev HA, 11/09

EMERSON
Process Management

Instruction Manual
PN 51-1056/rev.H
April 2010

Model 1056

DUAL-INPUT INTELLIGENT ANALYZER

ROSEMOUNT® Analytical

EMERSON™ Process Management

ESSENTIAL INSTRUCTIONS

READ THIS PAGE BEFORE PROCEEDING!

Your instrument purchase from Rosemount Analytical, Inc. is one of the finest available for your particular application. These instruments have been designed, and tested to meet many national and international standards. Experience indicates that its performance is directly related to the quality of the installation and knowledge of the user in operating and maintaining the instrument. To ensure their continued operation to the design specifications, personnel should read this manual thoroughly before proceeding with installation, commissioning, operation, and maintenance of this instrument. If this equipment is used in a manner not specified by the manufacturer, the protection provided by it against hazards may be impaired.

- Failure to follow the proper instructions may cause any one of the following situations to occur: Loss of life; personal injury; property damage; damage to this instrument; and warranty invalidation.
- Ensure that you have received the correct model and options from your purchase order. Verify that this manual covers your model and options. If not, call 1-800-854-8257 or 949-757-8500 to request correct manual.
- For clarification of instructions, contact your Rosemount representative.
- Follow all warnings, cautions, and instructions marked on and supplied with the product.
- Use only qualified personnel to install, operate, update, program and maintain the product.
- Educate your personnel in the proper installation, operation, and maintenance of the product.
- Install equipment as specified in the Installation section of this manual. Follow appropriate local and national codes. Only connect the product to electrical and pressure sources specified in this manual.
- Use only factory documented components for repair. Tampering or unauthorized substitution of parts and procedures can affect the performance and cause unsafe operation of your process.
- All equipment doors must be closed and protective covers must be in place unless qualified personnel are performing maintenance.

⚠WARNING

RISK OF ELECTRICAL SHOCK

⧈ Equipment protected throughout by double insulation.

- Installation and servicing of this product may expose personel to dangerous voltages.
- Main power wired to separate power source must be disconnected before servicing.
- Do not operate or energize instrument with case open!
- Signal wiring connected in this box must be rated at least 240 V.
- Non-metallic cable strain reliefs do not provide grounding between conduit connections! Use grounding type bushings and jumper wires.
- Unused cable conduit entries must be securely sealed by non-flammable closures to provide enclosure integrity in compliance with personal safety and environmental protection requirements. Unused conduit openings must be sealed with NEMA 4X or IP65 conduit plugs to maintain the ingress protection rating (NEMA 4X).
- Electrical installation must be in accordance with the National Electrical Code (ANSI/NFPA-70) and/or any other applicable national or local codes.
- Operate only with front panel fastened and in place.
- Safety and performance require that this instrument be connected and properly grounded through a three-wire power source.
- Proper use and configuration is the responsibility of the user.

⚠CAUTION

This product generates, uses, and can radiate radio frequency energy and thus can cause radio communication interference. Improper installation, or operation, may increase such interference. As temporarily permitted by regulation, this unit has not been tested for compliance within the limits of Class A computing devices, pursuant to Subpart J of Part 15, of FCC Rules, which are designed to provide reasonable protection against such interference. Operation of this equipment in a residential area may cause interference, in which case the user at his own expense, will be required to take whatever measures may be required to correct the interference.

⚠CAUTION

This product is not intended for use in the light industrial, residential or commercial environments per the instrument's certification to EN50081-2.

Emerson Process Management

Liquid Division
2400 Barranca Parkway
Irvine, CA 92606 USA
Tel: (949) 757-8500
Fax: (949) 474-7250

http://www.raihome.com

© Rosemount Analytical Inc. 2008

EMERSON
Process Management

QUICK START GUIDE

Model 1056 Dual Input Analyzer

1. Refer to Section 2.0 for mechanical installation instructions.
2. Wire sensor(s) to the signal boards. See Section 3.0 for wiring instructions. Refer to the sensor instruction sheet for additional details. Make current output, alarm relay and power connections.
3. Once connections are secured and verified, apply power to the analyzer.

⚠WARNING

RISK OF ELECTRICAL SHOCK

Electrical installation must be in accordance with the National Electrical Code (ANSI/NFPA-70) and/or any other applicable national or local codes.

4. When the analyzer is powered up for the first time, **Quick Start** screens appear. Quick Start operating tips are as follows:
   a. A **backlit** field shows the position of the cursor.
   b. To move the cursor left or right, use the keys to the left or right of the ENTER key. To scroll up or down or to increase or decrease the value of a digit use the keys above and below the ENTER key . Use the left or right keys to move the decimal point.
   c. Press ENTER to store a setting. Press EXIT to leave without storing changes. Pressing EXIT during Quick Start returns the display to the initial start-up screen (select language).
5. Complete the steps as shown in the Quick Start Guide flow diagram, Fig. A on the following page.
6. After the last step, the main display appears. The outputs are assigned to default values.
7. To change output, and temperature-related settings, go to the main menu and choose **Program**. Follow the prompts. For a general guide to the Program menu, see the Quick Reference Guide, Fig.B.
8. To return the analyzer to the default settings, choose **Reset Analyzer** under the Program menu.

QUICK START GUIDE

Figure A. QUICK START GUIDE

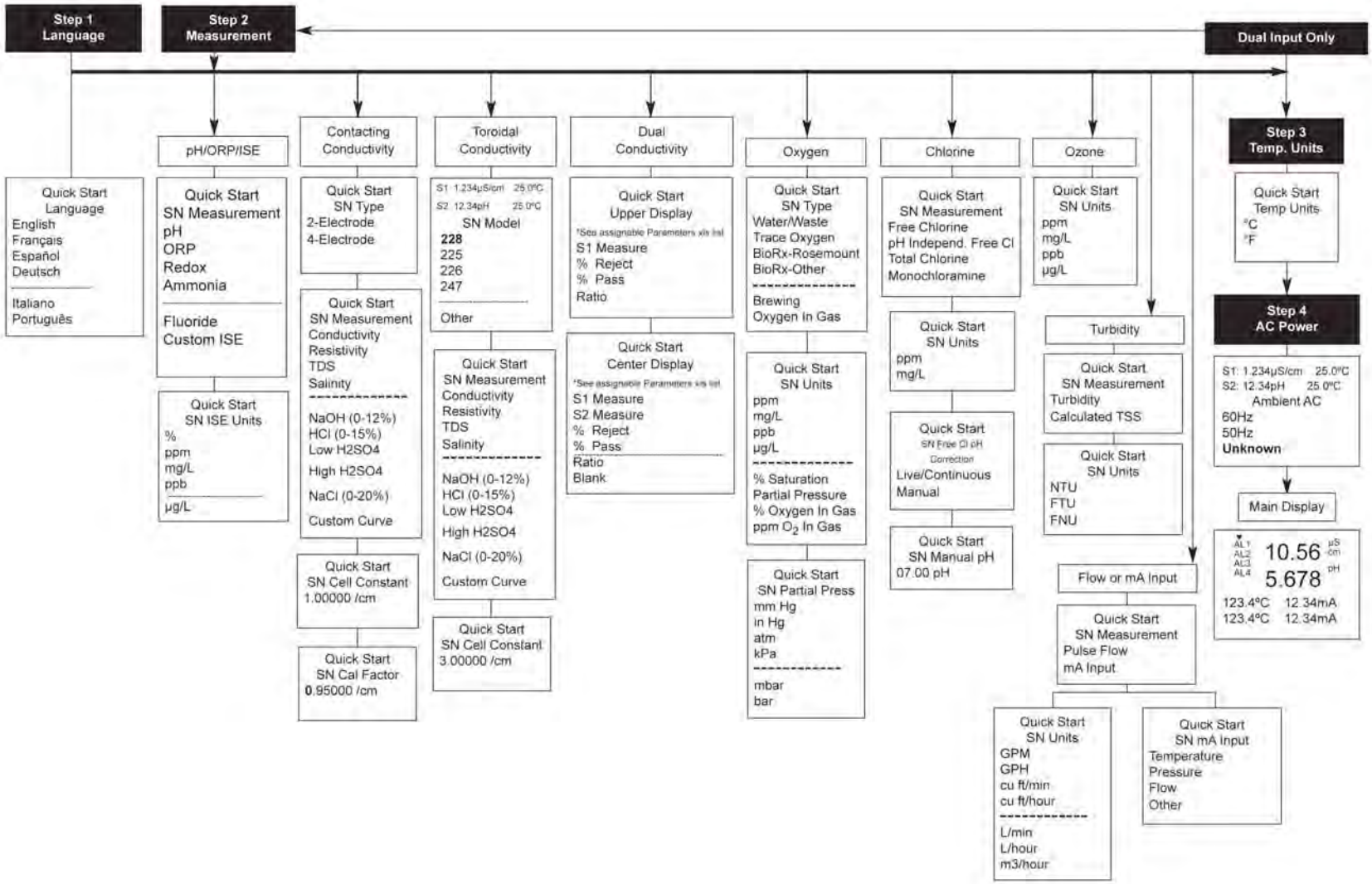

QUICK REFERENCE GUIDE

Figure B. MODEL 1056 MENU TREE

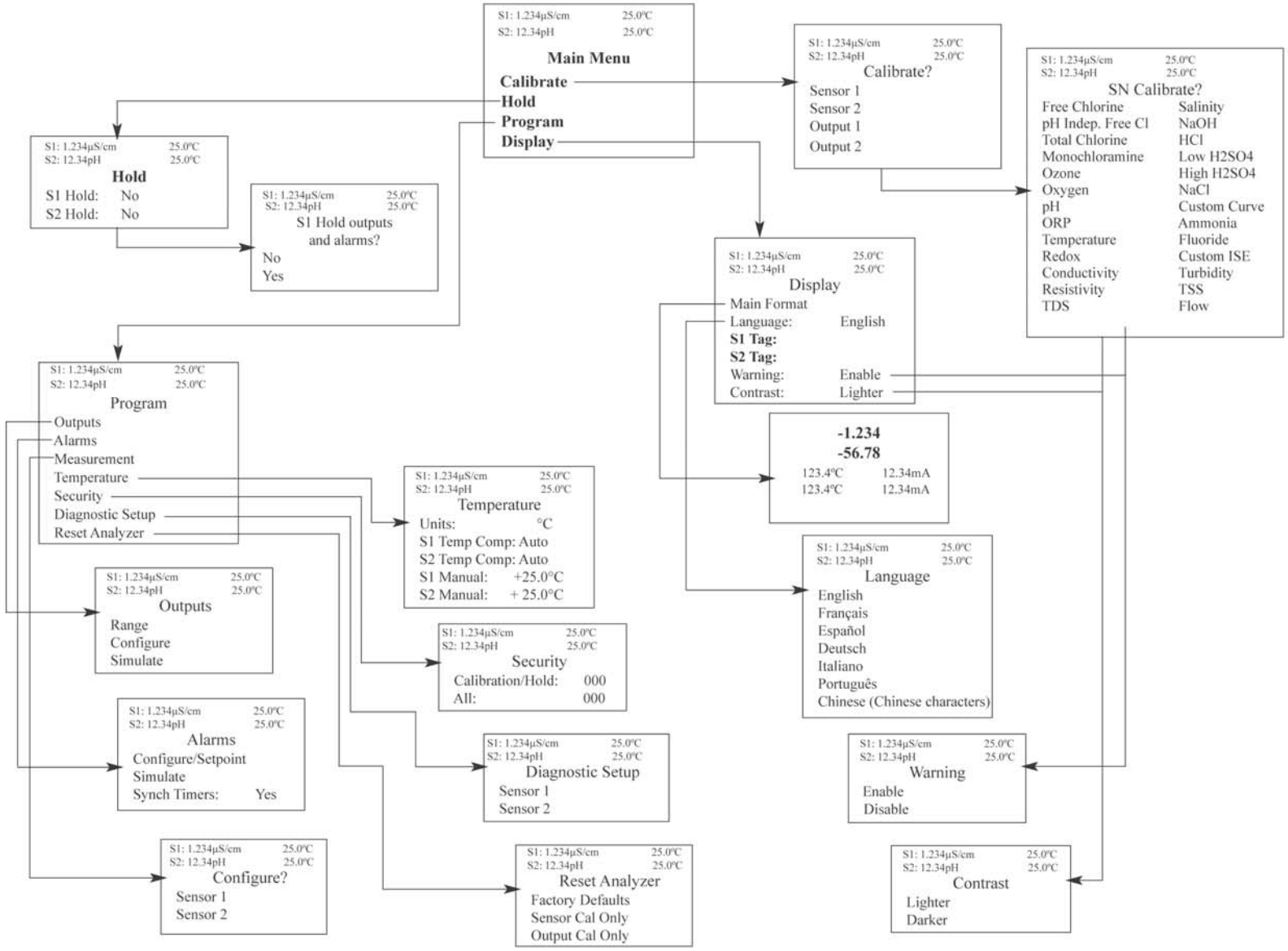

About This Document

This manual contains instructions for installation and operation of the Model 1056 Dual-Input Intelligent Analyzer. The following list provides notes concerning all revisions of this document.

Rev. Level	Date	Notes
A	01/07	This is the initial release of the product manual. The manual has been reformatted to reflect the Emerson documentation style and updated to reflect any changes in the product offering.
B	2/07	Added CE mark to p.2. Replaced Quick Start Fig A.
C	9/07	Revised Sections 1,3,5,6, and 7. Added new measurements and features - Turbidity, Flow, Current Input, Alarm relays and 4-electrode conductivity.
D	11/07	Added 24VDC power supply to Sec. 3.4. Added CSA and FM agency approvals for option codes -01, 20, 21, 22, 24, 25, 26, 30, 31, 32, 34, 35, 36 and 38.
E	05/08	Add HART and Profibus DP digital communication to Section 1 specifications.
F	08/08	Updates
G	09/08	FM and CSA agency approval, Class 1, Div 2. for 24 VDC and AC switching power supplies.
H	04/10	Update DNV logo and company name

MODEL 1056
DUAL INPUT INTELLIGENT ANALYZER

TABLE OF CONTENTS

Section	Title	Page
	QUICK START GUIDE	
	QUICK REFERENCE GUIDE	
	TABLE OF CONTENTS	
1.0	**DESCRIPTION AND SPECIFICATIONS**	1
2.0	**INSTALLATION**	11
2.1	Unpacking and Inspection	11
2.2	Installation	11
3.0	**WIRING**	19
3.1	General	19
3.2	Preparing Conduit Openings	19
3.3	Preparing Sensor Cable	20
3.4	Power, Output, Alarms and Sensor Connections	20
4.0	**DISPLAY AND OPERATION**	27
4.1	User Interface	27
4.2	Instrument Keypad	27
4.3	Main Display	28
4.4	Menu System	29
5.0	**PROGRAMMING – BASICS**	31
5.1	General	31
5.2	Changing the StartUp Settings	31
5.3	Choosing Temperature units and Automatic/Manual Temperature Compensation	32
5.4	Configuring and Ranging the Current Outputs	32
5.5	Setting a Security Code	34
5.6	Security Access	35
5.7	Using Hold	35
5.8	Resetting Factory Defaults – Reset Analyzer	36
5.9	Alarm Relays	37
6.0	**PROGRAMMING - MEASUREMENTS**	41
6.1	Programming Measurements – Introduction	41
6.2	pH	42
6.3	ORP	43
6.4	Contacting Conductivity	45
6.5	Toroidal Conductivity	48
6.6	Chlorine	51
	6.6.1 Free Chlorine	51
	6.6.2 Total Chlorine	53
	6.6.3 Monochloramine	54
	6.6.4 pH-independent Free Chlorine	55
6.7	Oxygen	57
6.8	Ozone	59

TABLE OF CONTENTS CONT'D

6.9 Turbidity 60
6.10 Flow 63
6.11 Current Input 64
7.0 CALIBRATION 75
7.1 Calibration – Introduction 75
7.2 pH Calibration 76
7.3 ORP Calibration 78
7.4 Contacting Conductivity Calibration 79
7.5 Toroidal Conductivity Calibration 82
7.6 Chlorine Calibration 84
7.6.1 Free Chlorine 84
7.6.2 Total Chlorine 86
7.6.3 Monochloramine 88
7.6.4 pH-Independent Free Chlorine 90
7.7 Oxygen Calibration 92
7.8 Ozone Calibration 95
7.9 Temperature Calibration 97
7.10 Turbidity 98
7.11 Pulse Flow 100
8.0 RETURN OF MATERIAL 112
Warranty 112

TABLE OF CONTENTS CONT'D

LIST OF FIGURES

Fig#	Section	Figure Title	Page
A	PREFACE	Quick Start Guide	
B	PREFACE	Quick Reference Guide	
2-1	SEC 2.0	Panel Mounting Dimensions	12
2-2	SEC 2.0	Pipe and Wall Mounting Dimensions	13
2-3	SEC 2.0	CSA Certification drawing part 1	14
2-4	SEC 2.0	CSA Certification drawing part 2	15
2-5	SEC 2.0	FM Non-Incendive drawing part 1	16
2-6	SEC 2.0	FM Non-Incendive drawing part 2	17
3-1	SEC 3.4	115/230 VAC Power Supply	20
3-2	SEC 3.4	24VDC Power Supply	20
3-3	SEC 3.4	Switching AC Power Supply	20
3-4	SEC 3.4	Current Output Wiring	21
3-5	SEC 3.4	Alarm Relay Wiring for Model 1056 Switching Power Supply	21
3-6	SEC 3.4	Contacting Conductivity board and sensor cable leads	22
3-7	SEC 3.4	Toroidal Conductivity signal board and sensor cable leads	22
3-8	SEC 3.4	pH/ORP/ISE signal board and sensor cable leads	23
3-9	SEC 3.4	Amperometric board (Cl, O2, Ozone) and sensor cable leads	23
3-10	SEC 3.4	Turbidity signal board wiht plug-in Sensor connection	24
3-11	SEC 3.4	Flow/Current Input signal board and Sensor cable leads	24
3-12	SEC 3.4	Power Wiring for Model 1056 115/230 VAC	25
3-13	SEC 3.4	Power Wiring for Model 1056 85-265 VAC	25
3-14	SEC 3.4	Output Wiring for Model 1056 Main PCB	26
3-15	SEC 3.4	Power Wiring for Model 1056 24VDC	26
4-1	SEC 4.3	Formatting the Main Display	30
5-1	SEC 5.3.2	Choosing Temp Units and Manual Auto Temp Compensation	32
5-2	SEC 5.4.5	Configuring and Ranging the Current Outputs	33
5-3	SEC 5.5.2	Setting A Security Code	34
5-4	SEC 5.7.2	Using Hold	35
5-5	SEC 5.8.2	Resetting Factory Default Settings	36
6-1	SEC 6.2	Configuring pH/ORP Measurements	67
6-2	SEC 6.4	Configure Contacting Measurements	68
6-3	SEC 6.5	Configure Toroidal Measurements	69
6-4	SEC 6.6	Configure Chlorine Measurements	71
6-5	SEC 6.7	Configure Oxygen Measurements	70
6-6	SEC 6.8	Configure Ozone Measurements	71
6-7	SEC 6.9	Configure Turbidity Measurement	72
6-8	SEC 6.10	Configure Flow Measurement	73
6-9	SEC 6.11	Configure mA Current Input Measurement	73
7-1	SEC 7.2	Calibrate pH	103
7-2	SEC 7.3	Calibrate ORP	104
7-3	SEC 7.4	Calibrate Contacting and Toroidal Conductivity	105
7-4	SEC 7.6	Calibrate Chlorine	106
7-5	SEC 7.7	Calibrate Oxygen	107
7-6	SEC 7.8	Calibrate Ozone	108
7-7	SEC 7.9	Calibrate Temperature	109
7-8	SEC 7.10	Calibrate Turbidity	110
7-9	SEC 7.11	Calibrate Flow	111

TABLE OF CONTENTS CONT'D

LIST OF TABLES

Number	Section	Table Title	Page
5-1	SEC 5.2.1	Measurements and Measurement Units	31
6-1	SEC 6.2.1	pH Measurement Programming	42
6-2	SEC 6.3.1	ORP Measurement Programming	43
6-3	SEC 6.4.1	Contacting Conductivity Measurement Programming	45
6-4	SEC 6.5.1	Toroidal Conductivity Measurement Programming	48
6-5	SEC 6.6.1.1	Free Chlorine Measurement Programming	51
6-6	SEC 6.6.2.1	Total Chlorine Measurement Programming	53
6-7	SEC 6.6.3.1	Monochloramine Measurement Programming	54
6-8	SEC 6.6.4	pH-Independent Free Chlorine Measurement Programming	55
6-9	SEC. 6.7.1	Oxygen Measurement Programming	57
6-10	SEC 6.8.1	Ozone Measurement Programming	59
6-11	SEC 6.9.1	Turbidity Measurement Programming	60
6-12	SEC 6.10.1	Flow Measurement Programming	63
6-13	SEC 6.11.1	Curent Input Programming	64
7-1	SEC 7.2	pH Calibration Routines	76
7-2	SEC 7.3	ORP Calibration Routine	78
7-3	SEC 7.4	Contacting Conductivity Calibration Routines	79
7-4	SEC 7.5	Toroidal Conductivity Calibration	82
7-5	SEC 7.6.1	Free Chlorine Calibration Routines	85
7-6	SEC 7.6.2	Total Chlorine Calibration Routines	86
7-7	SEC 7.6.3	Monochloramine Calibration Routines	88
7-8	SEC 7.6.4	pH-independent Free Chlorine Calibration Routines	90
7-9	SEC 7.7	Oxygen Calibration Routines	93
7-10	SEC 7.8	Ozone Calibration Routines	95
7-11	SEC 7.9	Temperature Calibration Routines	97
7-12	SEC 7.10	Turbidity Calibration Routines	98
7-13	SEC 7.11	Flow Calibration Routines	100

SECTION 1.0.
DESCRIPTION AND SPECIFICATIONS

- MULTI-PARAMETER INSTRUMENT – single or dual input. Choose from pH/ORP/ISE, Resistivity/Conductivity, % Concentration, Chlorine, Oxygen, Ozone, Temperature, Turbidity, Flow, and 4-20mA Current Input.
- LARGE DISPLAY – large easy-to-read process measurements.
- EASY TO INSTALL – modular boards, removable connectors, easy to wire power, sensors, and outputs.
- INTUITIVE MENU SCREENS with advanced diagnostics and help screens.
- SEVEN LANGUAGES included: English, French, German, Italian, Spanish, Portuguese, and Chinese.
- HART® AND PROFIBUS® DP Digital Communications options

FEATURES AND APPLICATIONS

The Model 1056 dual-input analyzer offers single or dual sensor input with an unrestricted choice of dual measurements. This multi-parameter instrument offers a wide range of measurement choices supporting most industrial, commercial, and municipal applications. The modular design allows signal input boards to be field replaced making configuration changes easy. Conveniently, live process values are always displayed during programming and calibration routines.

QUICK START PROGRAMMING: Exclusive Quick Start screens appear the first time the Model 1056 is powered. The instrument auto-recognizes each measurement board and prompts the user to configure each sensor loop in a few quick steps for immediate deployment.

DIGITAL COMMUNICATIONS: HART and Profibus DP digital communications are available. Model 1056 HART units communicate with the Model 375 HART® hand-held communicator and HART hosts, such as AMS Intelligent Device Manager. Model 1056 Profibus units are fully compatible with Profibus DP networks and Class 1 or Class 2 masters. HART and Profibus DP configured units will support any single or dual measurement configuration of Model 1056.

MENUS: Menu screens for calibrating and programming are simple and intuitive. Plain language prompts and help screens guide the user through these procedures.

DUAL SENSOR INPUT AND OUTPUT: The Model 1056 accepts single or dual sensor input. Standard 0/4-20 mA current outputs can be programmed to correspond to any measurement or temperature.

ENCLOSURE: The instrument fits standard ½ DIN panel cutouts. The versatile enclosure design supports panel-mount, pipe-mount, and surface/wall-mount installations.

ISOLATED INPUTS: Inputs are isolated from other signal sources and earth ground. This ensures clean signal inputs for single and dual input configurations. For dual input configurations, isolation allows any combination of measurements and signal inputs without cross-talk or signal interference.

TEMPERATURE: Most measurements require temperature compensation. The Model 1056 will automatically recognize Pt100, Pt1000 or 22k NTC RTDs built into the sensor.

SECURITY ACCESS CODES: Two levels of security access are available. Program one access code for routine calibration and hold of current outputs; program another access code for all menus and functions.

DIAGNOSTICS: The analyzer continuously monitors itself and the sensor(s) for problematic conditions. The display flashes Fault and/or Warning when these conditions occur.

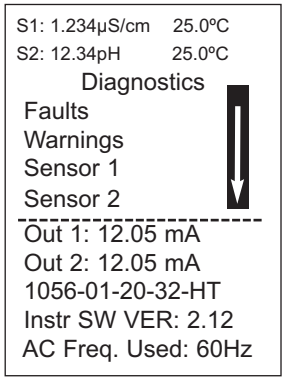

Information about each condition is quickly accessible by pressing DIAG on the keypad. User help screens are displayed for most fault and warning conditions to assist in troubleshooting.

DISPLAY: The high-contrast LCD provides live measurement readouts in large digits and shows up to four additional process variables or diagnostic parameters. The display is back-lit and the format can be customized to meet user requirements.

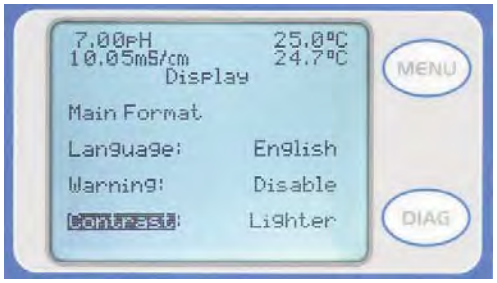

LOCAL LANGUAGES :
Rosemount Analytical extends its worldwide reach by offering seven local languages – English, French, German, Italian, Spanish, Portuguese, and Chinese. Every unit includes user programming menus; calibration routines; faults and warnings; and user help screens in all seven languages. The displayed language can be easily set and changed using the menus.

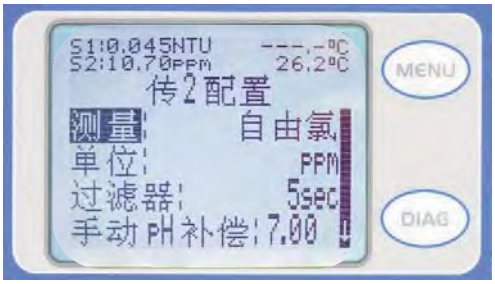

CURRENT OUTPUTS: Two 4-20 mA or 0-20 mA current outputs are electrically isolated. Outputs are fully scalable and can be programmed to linear or logarithmic modes. Output dampening can be enabled with time constants from 0 to 999 seconds. Output 1 includes digital signal 4-20 mA superimposed HART (option -HT only)

SPECIAL MEASUREMENTS: The Model 1056 offers measuring capabilities for many applications.

- **Single or Dual Turbidity:** Ideal in municipal applications for measurement of low-NTU filtered drinking water. Must be used with Clarity II sensor, sensor cable and debubbler.

- **4-Electrode Conductivity:**
The Model 1056 is compatible with Rosemount Analytical 4-electrode Model 410VP in the PUR-SENSE™ family of conductivity sensors. This sensor supports a wide array of applications and is capable of measuring a large range of conductivity with one geometric configuration. Wired to the Model 1056, this sensor can measure 2µS/cm to 300mS/cm with an accuracy of 4% of reading throughout the entire range.
- **4-20mA Current Input:** Accepts any analog current input from an external device for temperature compensation of measurements and atmospheric pressure input for partial pressure correction of oxygen.
- **Selective Ions:** The analyzer is able to measure ammonia and fluoride using commercially available ion-selective electrodes. All analyzers with installed pH boards can be programmed to measure selective ions.
- **pH Independent Free Chlorine:** With Rosemount Analytical's Model 498Cl-01 sensor, the analyzer is able to measure free chlorine with automatic correction for process pH without the need for a pH sensor.
- **Inferential pH:** The analyzer is able to derive and display inferred pH (pHCalc) using two contacting conductivity signal boards and the appropriate contacting conductivity sensors. This method will calculate the pH of condensate and boiler water from conductivity and cation conductivity measurements.
- **Differential Conductivity:** Dual input conductivity configurations can measure differential conductivity. The analyzer can be programmed to display dual conductivity as ratio, % rejection, or % passage.

SPECIFICATIONS - General

Enclosure: Polycarbonate. NEMA 4X/CSA 4 (IP65).

Dimensions: Overall 155 x 155 x 131mm (6.10 x 6.10 x 5.15 in.). Cutout: 1/2 DIN 139mm x 139mm (5.45 x 5.45 in.)

Conduit Openings: Accepts 1/2" or PG13.5 conduit fittings

Display: Monochromatic graphic liquid crystal display. 128 x 96 pixel display resolution. Backlit. Active display area: 58 x 78mm (2.3 x 3.0 in.).

Ambient Temperature and Humidity: 0 to 55°C (32 to 131°F). Turbidity only: 0 to 50°C (32 to 122°F), RH 5 to 95% (non-condensing)

Storage Temperature Effect: -20 to 60ºC (-4 to 140°F)

Hazardous Location Approvals -
Options for CSA: -01, 02, 03, 20, 21, 22, 24, 25, 26, 27, 30, 31, 32, 34, 35, 36, 37, 38, AN, and HT.

LR 34186
C US

Class I, Division 2, Groups A, B, C, & D
Class II, Division 2, Groups E, F, & G
Class III T4A Tamb= 50°C

Evaluated to the ANSI/UL Standards. The 'C' and 'US' indicators adjacent to the CSA Mark signify that the product has been evaluated to the applicable CSA and ANSI/UL Standards, for use in Canada and the U.S. respectively

Options for FM: -01, 02, 03, 20, 21, 22, 24, 25, 26, 30, 31, 32, 34, 35, 36, 38, AN, and HT.

FM APPROVED

Class I, Division 2, Groups A, B, C, & D
Class II & III, Division 2, Groups E, F, & G
T4A Tamb= 50°C Enclosure Type 4X

POLLUTION DEGREE 2: Normally only non-conductive pollution occurs. Occasionally, however, a temporary conductivity caused by condensation must be expected. Altitude: for use up to 2000 meter (6562 ft.)

Power: Code -01: 115/230 VAC ±15%, 50/60 Hz. 10W.

Code -02: 20 to 30 VDC. 15 W.

Code -03: 85 to 265 VAC, 47.5 to 65.0 Hz, switching. 15 W.

Note: Code -02 and -03 power supplies include 4 programmable relays

⧈ Equipment protected by double insulation

RFI/EMI: EN-61326
LVD: EN-61010-1

Alarms relays*: Four alarm relays for process measurement(s) or temperature. Any relay can be configured as a fault alarm instead of a process alarm. Each relay can be configured independently and each can be programmed with interval timer settings.

Relays: Form C, SPDT, epoxy sealed

Maximum Relay Current	
	Resistive
28 VDC	5.0 A
115 VAC	5.0 A
230 VAC	5.0 A

Inductive load: 1/8 HP motor (max.), 40 VAC

⚠ CAUTION

RISK OF ELECTRICAL SHOCK

*Relays only available with -02 power supply (20 - 30 VDC) or -03 switching power supply (85 - 265 VAC)

⚠ WARNING

Exposure to some chemicals may degrade the sealing properties used in the following devices: Zettler Relays (K1-K4) PN AZ8-1CH-12DSEA

Inputs: One or two isolated sensor inputs

Outputs: Two 4-20 mA or 0-20 mA isolated current outputs. Fully scalable. Max Load: 550 Ohm. Output 1 has superimposed HART signal (configurations 1056-0X-2X-3X-HT only)

Current Output Accuracy: ±0.05 mA @ 25 ºC

Terminal Connections Rating: Power connector (3-leads): 24-12 AWG wire size. Signal board terminal blocks: 26-16 AWG wire size. Current output connectors (2-leads): 24-16 AWG wire size. Alarm relay terminal blocks: 24-12 AWG wire size (-02 24 VDC power supply and -03 85-265VAC power supply)

Weight/Shipping Weight: (rounded up to nearest lb or nearest 0.5 kg): 3 lbs/4 lbs (1.5 kg/2.0 kg)

CONTACTING CONDUCTIVITY (Codes -20 and -30)

Measures conductivity in the range 0 to 600,000 µS/cm (600mS/cm). Measurement choices are conductivity, resistivity, total dissolved solids, salinity, and % concentration. The % concentration selection includes the choice of five common solutions (0-12% NaOH, 0-15% HCl, 0-20% NaCl, and 0-25% or 96-99.7% H_2SO_4).

The conductivity concentration algorithms for these solutions are fully temperature compensated. Three temperature compensation options are available: manual slope (X%/°C), high purity water (dilute sodium chloride), and cation conductivity (dilute hydrochloric acid). Temperature compensation can be disabled, allowing the analyzer to display raw conductivity. For more information concerning the use and operation of the contacting conductivity sensors, refer to the product data sheets.

Note: When two contacting conductivity sensors are used, Model 1056 can derive an inferred pH value called pHCalc. pHCalc is calculated pH, not directly measured pH. (Model 1056-0X-20-30-AN required)

Note: Selected 4-electrode, high-range contacting conductivity sensors are compatible with Model 1056.

Input filter: time constant 1 - 999 sec, default 2 sec.

Response time: 3 seconds to 100% of final reading

Salinity: uses Practical Salinity Scale

Total Dissolved Solids: Calculated by multiplying conductivity at 25ºC by 0.65

Temperature Specifications:

Temperature range	0-150ºC
Temperature Accuracy, Pt-1000, 0-50 ºC	± 0.1ºC
Temperature Accuracy, Pt-1000, Temp. > 50 ºC	± 0.5ºC

RECOMMENDED SENSORS FOR CONDUCTIVITY:

All Rosemount Analytical ENDURANCE Model 400 series conductivity sensors (Pt 1000 RTD) and PUR-SENSE™ Model 410 sensor.

PUR-SENSE™ family 4-electrode sensors

ENDURANCE™ series of conductivity sensors

PERFORMANCE SPECIFICATIONS

Recommended Range – Contacting Conductivity

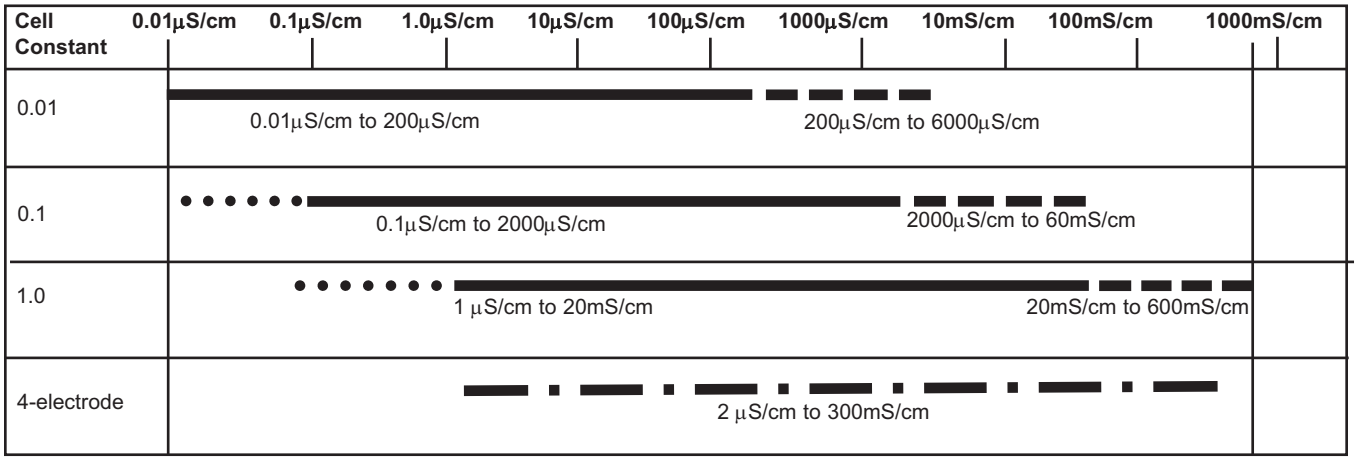

Cell Constant Linearity

- ±0.6% of reading in recommended range
- +2 to -10% of reading outside high recommended range
- ±5% of reading outside low recommended range
- ±4% of reading in recommended range

TOROIDAL CONDUCTIVITY (Codes -21 and -31)

Measures conductivity in the range of 1 (one) µS/cm to 2,000,000 µS/cm (2 S/cm), Measurement choices are conductivity, resistivity, total dissolved solids, salinity, and % concentration. The % concentration selection includes the choice of five common solutions (0-12% NaOH, 0-15% HCl, 0-20% NaCl, and 0-25% or 96-99.7% H_2SO_4). The conductivity concentration algorithms for these solutions are fully temperature compensated. For other solutions, a simple-to-use menu allows the customer to enter his own data. The analyzer accepts as many as five data points and fits either a linear (two points) or a quadratic function (three or more points) to the data. Two temperature compensation options are available: manual slope (X%/°C) and neutral salt (dilute sodium chloride). Temperature compensation can be disabled, allowing the analyzer to display raw conductivity. Reference temperature and linear temperature slope may also be adjusted for optimum results. For more information concerning the use and operation of the toroidal conductivity sensors, refer to the product data sheets.

Repeatability: ±0.25% ±5 µS/cm after zero cal

Input filter: time constant 1 - 999 sec, default 2 sec.

Response time: 3 seconds to 100% of final reading

Salinity: uses Practical Salinity Scale

Total Dissolved Solids: Calculated by multiplying conductivity at 25ºC by 0.65

Temperature Specifications:

Temperature range	-25 to 210ºC (-13 to 410ºF)
Temperature Accuracy, Pt-100, -25 to 50 ºC	± 0.5ºC
Temperature Accuracy, Pt-100,. 50 to 210ºC	± 1ºC

RECOMMENDED SENSORS:

All Rosemount Analytical submersion/immersion and flow-through toroidal sensors.

High performance toroidal conductivity sensors
Models 226 and 225

PERFORMANCE SPECIFICATIONS

Recommended Range - Toroidal Conductivity

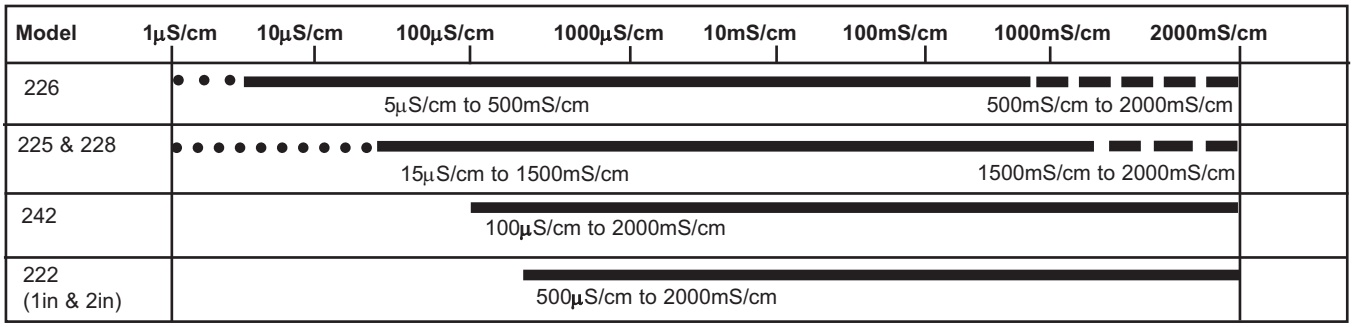

LOOP PERFORMANCE (Following Calibration)

Model 226: ±1% of reading ±5µS/cm in recommended range
Models 225 & 228: ±1% of reading ±10µS/cm in recommended range
Models 222,242: ±4% of reading in recommended range

Model 225, 226 & 228: ±5% of reading outside high recommended range

Model 226: ±5µS/cm outside low recommended range
Models 225 & 228: ±15µS/cm outside low recommended range

pH/ORP/ISE (Codes -22 and -32)

For use with any standard pH or ORP sensor. Measurement choices are pH, ORP, Redox, ammonia, fluoride or custom ISE. The automatic buffer recognition feature uses stored buffer values and their temperature curves for the most common buffer standards available worldwide. The analyzer will recognize the value of the buffer being measured and perform a self stabilization check on the sensor before completing the calibration. Manual or automatic temperature compensation is menu selectable. Change in pH due to process temperature can be compensated using a programmable temperature coefficient. For more information concerning the use and operation of the pH or ORP sensors, refer to the product data sheets.

Model 1056 can also derive an inferred pH value called pHCalc (calculated pH). pHCalc can be derived and displayed when two contacting conductivity sensors are used. (Model 1056-0X-20-30-AN)

PERFORMANCE SPECIFICATIONS - ANALYZER (pH INPUT)

Measurement Range [pH]: 0 to 14 pH

Accuracy: ±0.01 pH

Diagnostics: glass impedance, reference impedance

Temperature coefficient: ±0.002pH/ ºC

Solution temperature correction: pure water, dilute base and custom.

Buffer recognition: NIST, DIN 19266, JIS 8802, BSI, DIN19267, Ingold, and Merck.

Input filter: time constant 1 - 999 seconds, default 4 seconds.

Response time: 5 seconds to 100%

Temperature Specifications:

Temperature range	0-150ºC
Temperature Accuracy, Pt-100, 0-50 ºC	± 0.5ºC
Temperature Accuracy, Temp. > 50 ºC	± 1ºC

PERFORMANCE SPECIFICATIONS - ANALYZER (ORP INPUT)

Measurement Range [ORP]: -1500 to +1500 mV

Accuracy: ± 1 mV

Temperature coefficient: ±0.12mV / ºC

Input filter: time constant 1 - 999 seconds, default 4 seconds.

Response time: 5 seconds to 100% of final reading

RECOMMENDED SENSORS FOR pH:

All standard pH sensors.

RECOMMENDED SENSORS FOR ORP:

All standard ORP sensors.

General purpose and high performance pH sensors
Models 396PVP, 399VP and 3300HT

FLOW (Code -23 and -33)

For use with most pulse signal flow sensors, the Model 1056 user-selectable units of measurement include flow rates in GPM (Gallons per minute), GPH (Gallon per hour), cu ft/min (cubic feet per min), cu ft/hour (cubic feet per hour), LPM (liters per minute), LPH (liters per hour), or m3/hr (cubic meters per hour), and velocity in ft/sec or m/sec. When configured to measure flow, the unit also acts as a totalizer in the chosen unit (gallons, liters, or cubic meters).

Dual flow instruments can be configured as a % recovery, flow difference, flow ratio, or total (combined) flow.

PERFORMANCE SPECIFICATIONS

Frequency Range: 3 to 1000 Hz

Flow Rate: 0 - 99,999 GPM, LPM, m3/hr, GPH, LPH, cu ft/min, cu ft/hr.

Totalized Flow: 0 – 9,999,999,999,999 Gallons or m3, 0 – 999, 999,999,999 cu ft.

Accuracy: 0.5%

Input filter: time constant 0-999 sec., default 5 sec.

RECOMMENDED SENSORS*

+GF+ Signet 515 Rotor-X Flow sensor

* Input voltage not to exceed ±36V

4-20mA Current Input (Codes -23 and -33)

For use with any transmitter or external device that transmits 4-20mA or 0-20mA current outputs. Typical uses are for temperature compensation of live measurements (except ORP, turbidity and flow) and for continuous atmospheric pressure input for determination of partial pressure, needed for compensation of live dissolved oxygen measurements. External input of atmospheric pressure for DO measurement allows continuous partial pressure compensation while the Model 1056 enclosure is completely sealed. (The pressure transducer component on the DO board can only be used for calibration when the case is open to atmosphere.)

Externally sourced current input is also useful for calibration of new or existing sensors that require temperature measurement or atmospheric pressure inputs (DO only).

For externally sourced temp or pressure compensation, the user must program the Model 1056 to input the 4-20mA current signal from the external device.

In addition to live continuous compensation of live measurements, the current input board can also be used simply to display the measured temperature. or the calculated partial pressure from the external device.

This feature leverages the large display variables on the Model 1056 as a convenience for technicians. Temperature can be displayed in degrees C or degrees F. Partial pressure can be displayed in inches Hg, mm Hg, atm (atmospheres), kPa (kiloPascals), bar or mbar.

The current input board can be used with devices that do not actively power their 4-20mA output signals. The Model 1056 actively powers to the + and – lines of the current input board to enable current input from a 4-20mA output device.

Note: this Model 1056 signal input board (-23, -33 model option code) also includes flow measurement functionality. The signal board, however, must be configured to measure either mA current input or flow.

PERFORMANCE SPECIFICATIONS

Measurement Range *[mA]: 0-20 or 4-20

Accuracy: ±0.03mA

Input filter: time constant 0-999 sec., default 5 sec.

*Current input not to exceed 22mA

CHLORINE (Code -24 and -34)

Free and Total Chlorine

The Model 1056 is compatible with the Model 499ACL-01 free chlorine sensor and the Model 499ACL-02 total chlorine sensor. The Model 499ACL-02 sensor must be used with the Model TCL total chlorine sample conditioning system. The Model 1056 fully compensates free and total chlorine readings for changes in membrane permeability caused by temperature changes. For free chlorine measurements, both automatic and manual pH correction are available. For automatic pH correction select code -32 and an appropriate pH sensor. For more information concerning the use and operation of the amperometric chlorine sensors and the TCL measurement system, refer to the product data sheets.

PERFORMANCE SPECIFICATIONS

Resolution: 0.001 ppm or 0.01 ppm – selectable

Input Range: 0nA – 100µA

Automatic pH correction (requires Code -32): 6.0 to 10.0 pH

Temperature compensation: Automatic (via RTD) or manual (0-50°C).

Input filter: time constant 1 - 999 sec, default 5 sec.

Response time: 6 seconds to 100% of final reading

RECOMMENDED SENSORS*

Chlorine: Model 499ACL-01 Free Chlorine or Model 499ACL-02 Total Residual Chlorine

pH: The following pH sensors are recommended for automatic pH correction of free chlorine readings: Models: 399-09-62, 399-14, and 399VP-09

Monochloramine

The Model 1056 is compatible with the Model 499A CL-03 Monochloramine sensor. The Model 1056 fully compensates readings for changes in membrane permeability caused by temperature changes. Because monochloramine measurement is not affected by pH of the process, no pH sensor or correction is required. For more information concerning the use and operation of the amperometric chlorine sensors, refer to the product data sheets.

PERFORMANCE SPECIFICATIONS

Resolution: 0.001 ppm or 0.01 ppm – selectable

Input Range: 0nA – 100µA

Temperature compensation: Automatic (via RTD) or manual (0-50°C).

Input filter: time constant 1 - 999 sec, default 5 sec.

Response time: 6 seconds to 100% of final reading

RECOMMENDED SENSORS

Rosemount Analytical Model 499ACL-03 Monochloramine sensor

pH-Independent Free Chlorine

The Model 1056 is compatible with the Model 498CL-01 pH-independent free chlorine sensor. The Model 498CL-01 sensor is intended for the continuous determination of free chlorine (hypochlorous acid plus hypochlorite ion) in water. The primary application is measuring chlorine in drinking water. The sensor requires no acid pre-treatment, nor is an auxiliary pH sensor required for pH correction. The Model 1056 fully compensates free chlorine readings for changes in membrane permeability caused by temperature. For more information concerning the use and operation of the amperometric chlorine sensors, refer to the product data sheets.

PERFORMANCE SPECIFICATIONS

Resolution: 0.001 ppm or 0.01 ppm – selectable

Input Range: 0nA – 100µA

Automatic pH correction: 6.5 to 10.0 pH

Temperature compensation: Automatic (via RTD) or manual (0-50°C).

Input filter: time constant 1 - 999 sec, default 5 sec.

Response time: 6 seconds to 100% of final reading

RECOMMENDED SENSORS

Rosemount Analytical Model 498CL-01 pH independent free chlorine sensor

Chlorine sensors with Variopol connection and cable connection
Model 498CL-01

DISSOLVED OXYGEN (Codes -25 and -35)

The Model 1056 is compatible with the Model 499ADO, 499ATrDO, Hx438, and Gx438 dissolved oxygen sensors and the Model 4000 percent oxygen gas sensor. The Model 1056 displays dissolved oxygen in ppm, mg/L, ppb, µg/L, % saturation, % O_2 in gas, ppm O_2 in gas. The analyzer fully compensates oxygen readings for changes in membrane permeability caused by temperature changes. An atmospheric pressure sensor is included on all dissolved oxygen signal boards to allow automatic atmospheric pressure determination at the time of calibration. If removing the sensor from the process liquid is impractical, the analyzer can be calibrated against a standard instrument. Calibration can be corrected for process salinity. For more information on the use of amperometric oxygen sensors, refer to the product data sheets.

PERFORMANCE SPECIFICATIONS

Resolution: 0.01 ppm; 0.1 ppb for 499A TrDO sensor (when O_2 <1.00 ppm); 0.1%

Input Range: 0nA – 100µA

Temperature Compensation: Automatic (via RTD) or manual (0-50°C).

Input filter: time constant 1 - 999 sec, default 5 sec.

Response time: 6 seconds to 100% of final reading

RECOMMENDED SENSORS

Rosemount Analytical amperometric membrane and steam-sterilizable sensors listed above

Dissolved Oxygen sensor with Variopol connection
Model 499ADO

DISSOLVED OZONE (Code -26 and -36)

The Model 1056 is compatible with the Model 499AOZ sensor. The Model 1056 fully compensates ozone readings for changes in membrane permeability caused by temperature changes. For more information concerning the use and operation of the amperometric ozone sensors, refer to the product data sheets.

PERFORMANCE SPECIFICATIONS

Resolution: 0.001 ppm or 0.01 ppm – selectable

Input Range: 0nA – 100µA

Temperature Compensation: Automatic (via RTD) or manual (0-35°C)

Input filter: time constant 1 - 999 sec, default 5 sec.

Response time: 6 seconds to 100% of final reading

RECOMMENDED SENSOR

Rosemount Analytical Model 499A OZ ozone sensor

Dissolved Ozone sensors with Polysulfone body
Variopol connection and cable connection
Model 499AOZ

Turbidity (Codes -27 and -37)

The Model 1056 instrument is available in single and dual turbidity configurations for the Clarity II® turbidimeter. It is intended for the determination of turbidity in filtered drinking water. The other components of the Clarity II turbidimeter – sensor(s), debubbler/measuring chamber(s), and cable for each sensor must be ordered separately or as a complete system with the Model 1056.

The Model 1056 turbidity instrument accepts inputs from both USEPA 180.1 and ISO 7027-compliant sensors

When ordering the Model 1056 turbidity instrument, the -02 (24VDC power supply) or the -03 (switching 115/230VAC power supply) are required. Both of these power supplies include four fully programmable relays with timers.

Note: Model 1056 Turbidity must be used with Clarity II sensor, sensor cable and debubbler.

PERFORMANCE SPECIFICATIONS

Units: Turbidity (NTU, FTU, or FNU); total suspended solids (mg/L, ppm, or no units)

Display resolution-turbidity: 4 digits; decimal point moves from x.xxx to xxx.x

Display resolution-TSS: 4 digits; decimal point moves from x.xxx to xxxx

Calibration methods: user-prepared standard, commercially prepared standard, or grab sample. For total suspended solids user must provide a linear calibration equation.

Inputs: Choice of single or dual input, EPA 180.1 or ISO 7027 sensors.

Field wiring terminals: removable terminal blocks for sensor connection.

Accuracy after calibration at 20.0 NTU:

0-1 NTU ±2% of reading or 0.015 NTU, whichever is greater.

0-20 NTU: ±2% of reading.

Clarity II Turbidimeter

SECTION 2.0. INSTALLATION

2.1 UNPACKING AND INSPECTION
2.2 INSTALLATION

2.1 UNPACKING AND INSPECTION

Inspect the shipping container. If it is damaged, contact the shipper immediately for instructions. Save the box. If there is no apparent damage, unpack the container. Be sure all items shown on the packing list are present. If items are missing, notify Rosemount Analytical immediately.

2.2 INSTALLATION

2.2.1 General Information

1. Although the analyzer is suitable for outdoor use, do not install it in direct sunlight or in areas of extreme temperatures.
2. Install the analyzer in an area where vibration and electromagnetic and radio frequency interference are minimized or absent.
3. Keep the analyzer and sensor wiring at least one foot from high voltage conductors. Be sure there is easy access to the analyzer.
4. The analyzer is suitable for panel, pipe, or surface mounting. Refer to the table below.

Type of Mounting	Figure
Panel	2-1
Wall and Pipe	2-2

⚠WARNING

RISK OF ELECTRICAL SHOCK

Electrical installation must be in accordance with the National Electrical Code (ANSI/NFPA-70) and/or any other applicable national or local codes.

FIGURE 2-1 PANEL MOUNTING DIMENSIONS

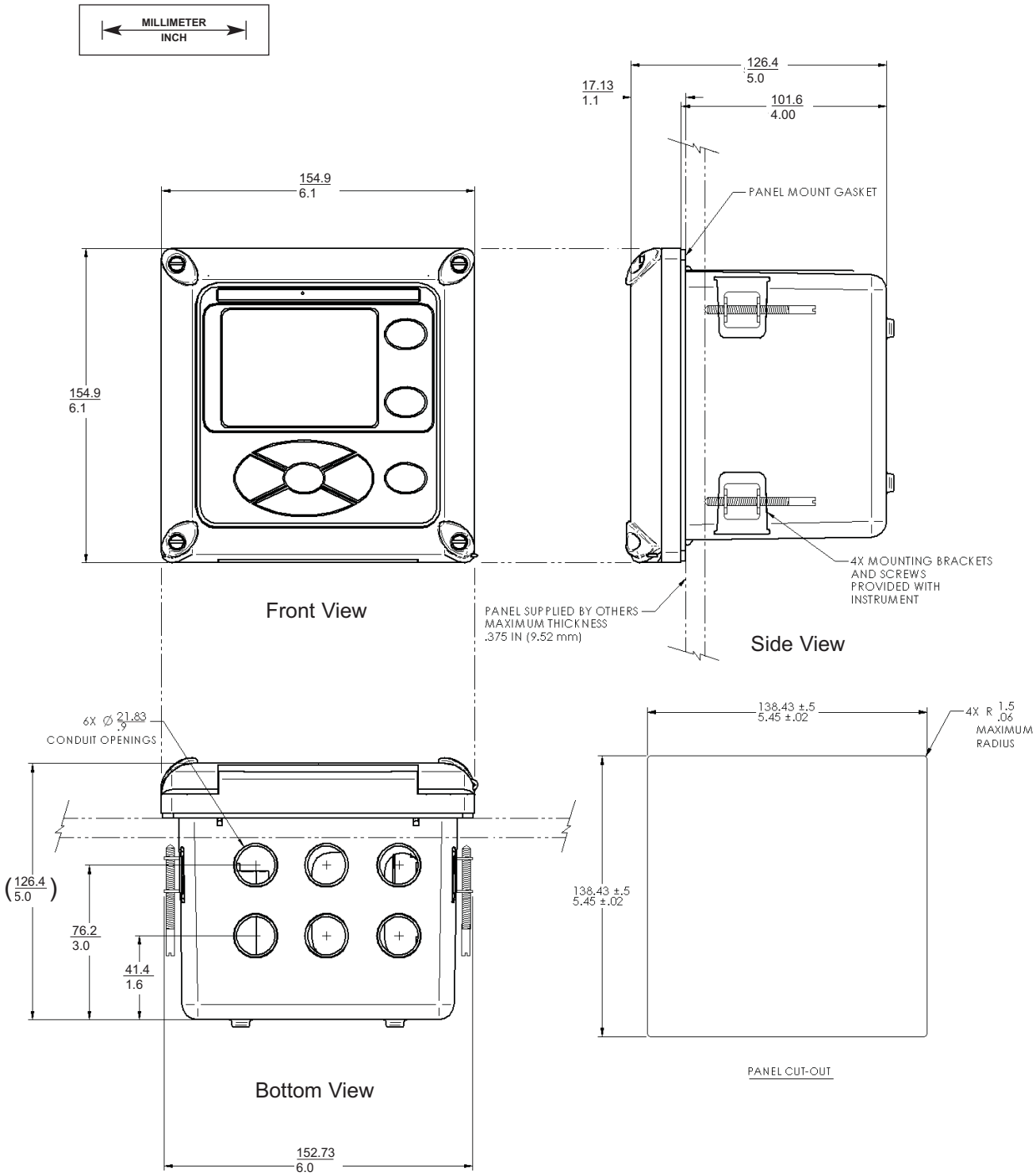

Note: Panel mounting seal integrity (4/4X) for outdoor applications is the responsibility of the end user.

FIGURE 2-2 PIPE AND WALL MOUNTING DIMENSIONS

(Mounting bracket PN:23820-00)

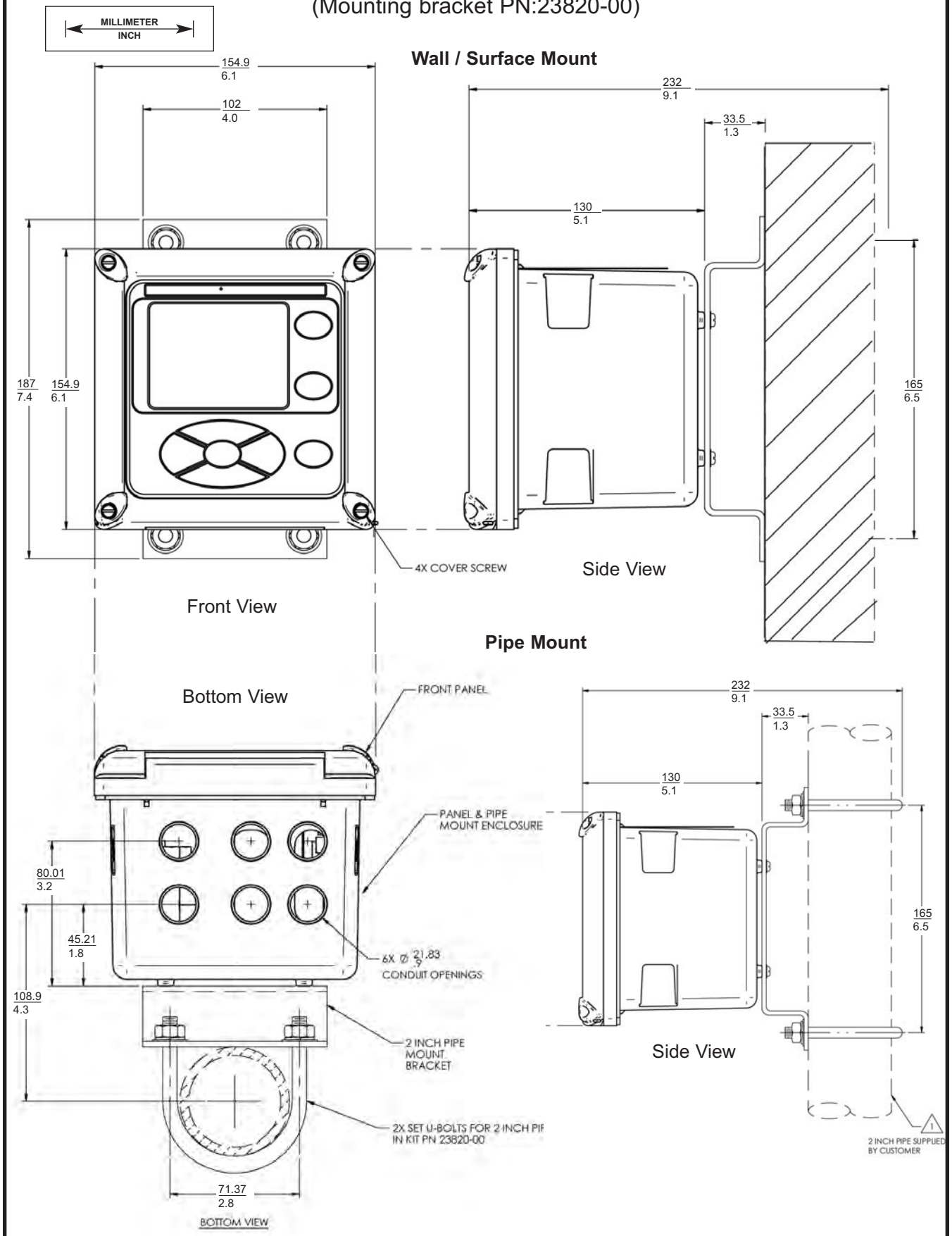

The front panel is hinged at the bottom. The panel swings down for easy access to the wiring locations.

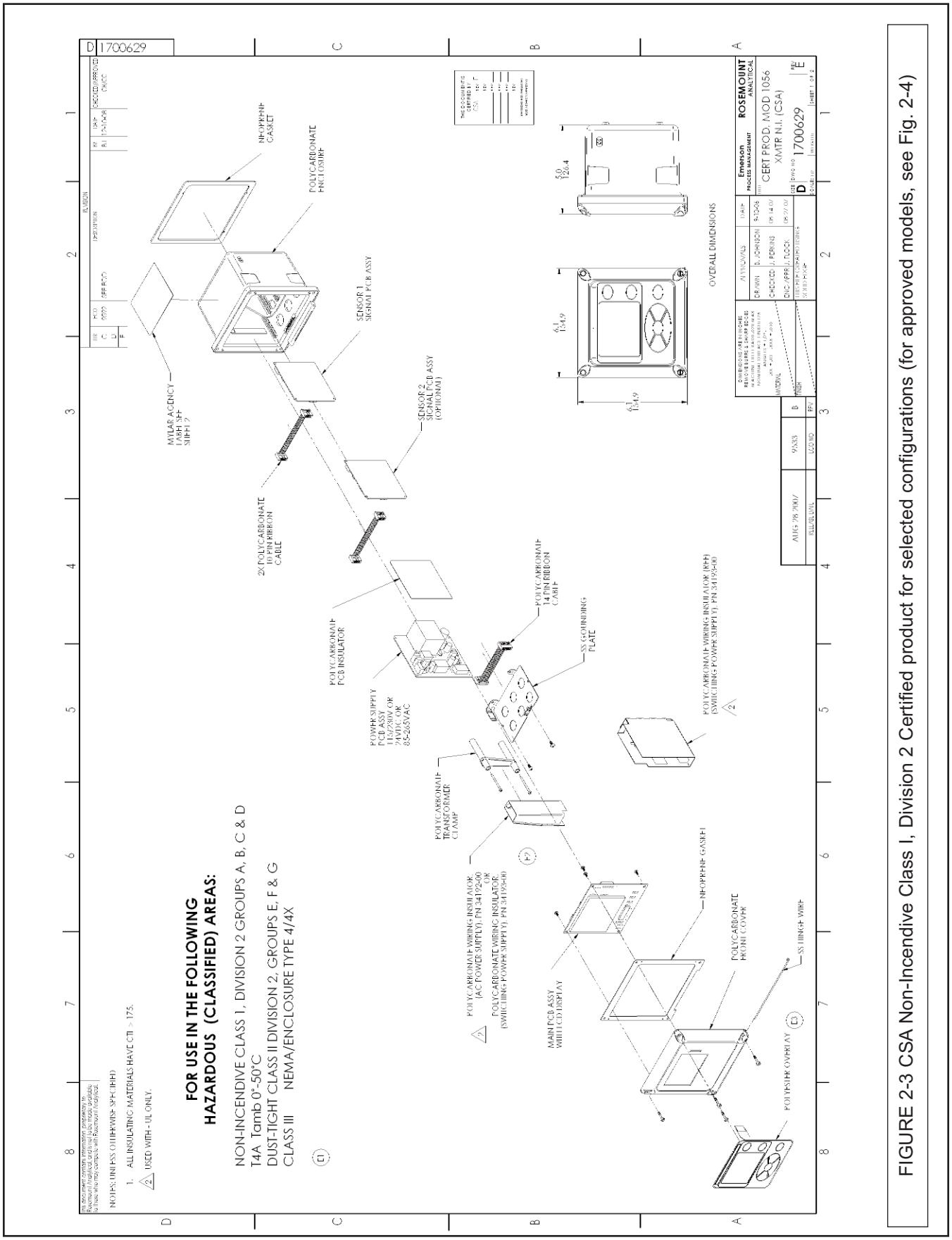

FIGURE 2-3 CSA Non-Incendive Class I, Division 2 Certified product for selected configurations (for approved models, see Fig. 2-4)

This document contains information proprietary to Rosemount Analytical, and is not to be made available to those who may compete with Rosemount Analytical.

APPROVED MODELS

MODEL 1056	
CODE	GROUP 1 POWER SUPPLY
01	115/230 VAC 50/60 Hz
02	24VDC
03	115/230 VAC 50/60 Hz WITH RELAYS

CODE	GROUP 2 - MEASUREMENT 1
20	CONTACTING CONDUCTIVITY
21	TOROIDAL CONDUCTIVITY
22	pH/ORP/ISE
24	CHLORINE
25	DISSOLVED OXYGEN
26	OZONE
27	TURBIDITY (WHEN INSTALLED PER DRAWING 1400325)

CODE	GROUP 3 - MEASUREMENT 2
30	CONTACTING CONDUCTIVITY
31	TOROIDAL CONDUCTIVITY
32	pH/ORP/ISE
34	CHLORINE
35	DISSOLVED OXYGEN
36	OZONE
37	TURBIDITY (WHEN INSTALLED PER DRAWING 1400325)
38	NONE

CODE	GROUP 4 - OUTPUTS
AN	ANALOG 4-20mA
HT	HART 4-20mA

UL	UL APPROVED (ORDINARY LOCATION ONLY)

RECOMMENDED SENSORS*

100 SERIES CONTACTING CONDUCTIVITY SENSORS
200 SERIES TOROIDAL CONDUCTIVITY SENSORS
300 SERIES pH SENSORS
400 SERIES CONTACTING CONDUCTIVITY SENSORS
498CL CHLORINE SENSOR
499A SERIES AMPEROMETRIC SENSORS
3000 SERIES pH SENSOR
Gx SERIES AMPEROMETRIC SENSORS
Hx SERIES pH SENSORS

* "VP" VERSIONS ARE NOT SUITABLE FOR USE IN CLASS 1, DIV 2 HAZARDOUS (CLASSIFIED) AREAS
* ALL ALLOWABLE SENSOR CONFIGURATIONS MUST PROVIDE CABLE PROTECTION PROVISIONS (i.e. METAL CONDUIT OR RACEWAYS) IN COMPLIANCE WITH THE CANADIAN ELECTRICAL CODE

WARNING

SENSORS WITH EXPOSED ELECTRODES SUCH AS THE MODEL 400, 498CL, 499A AND SOME Gx AND Hx SERIES MUST ONLY BE USED IN AQUEOUS NON-FLAMMABLE LIQUID PROCESSES

EXAMPLES: 1056-01-20-30-AN
1056-01-20-30-HT

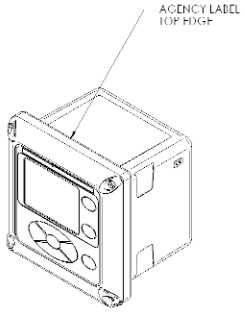

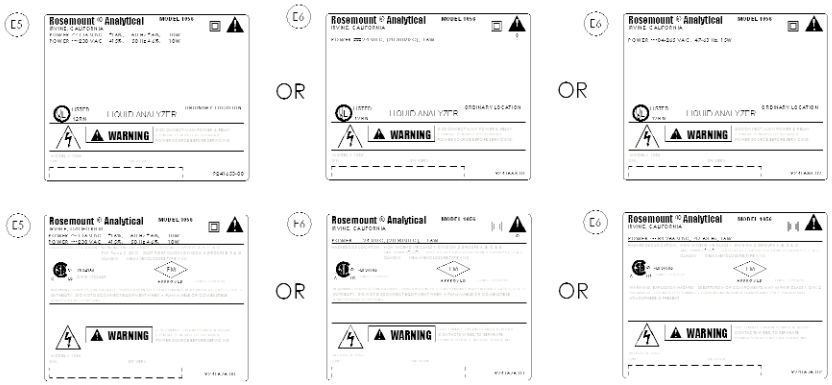

CERTIFICATION LABEL

D 1700629 E

FIGURE 2-4 CSA Non-Incendive Class I, Division 2 Certified product for selected configurations

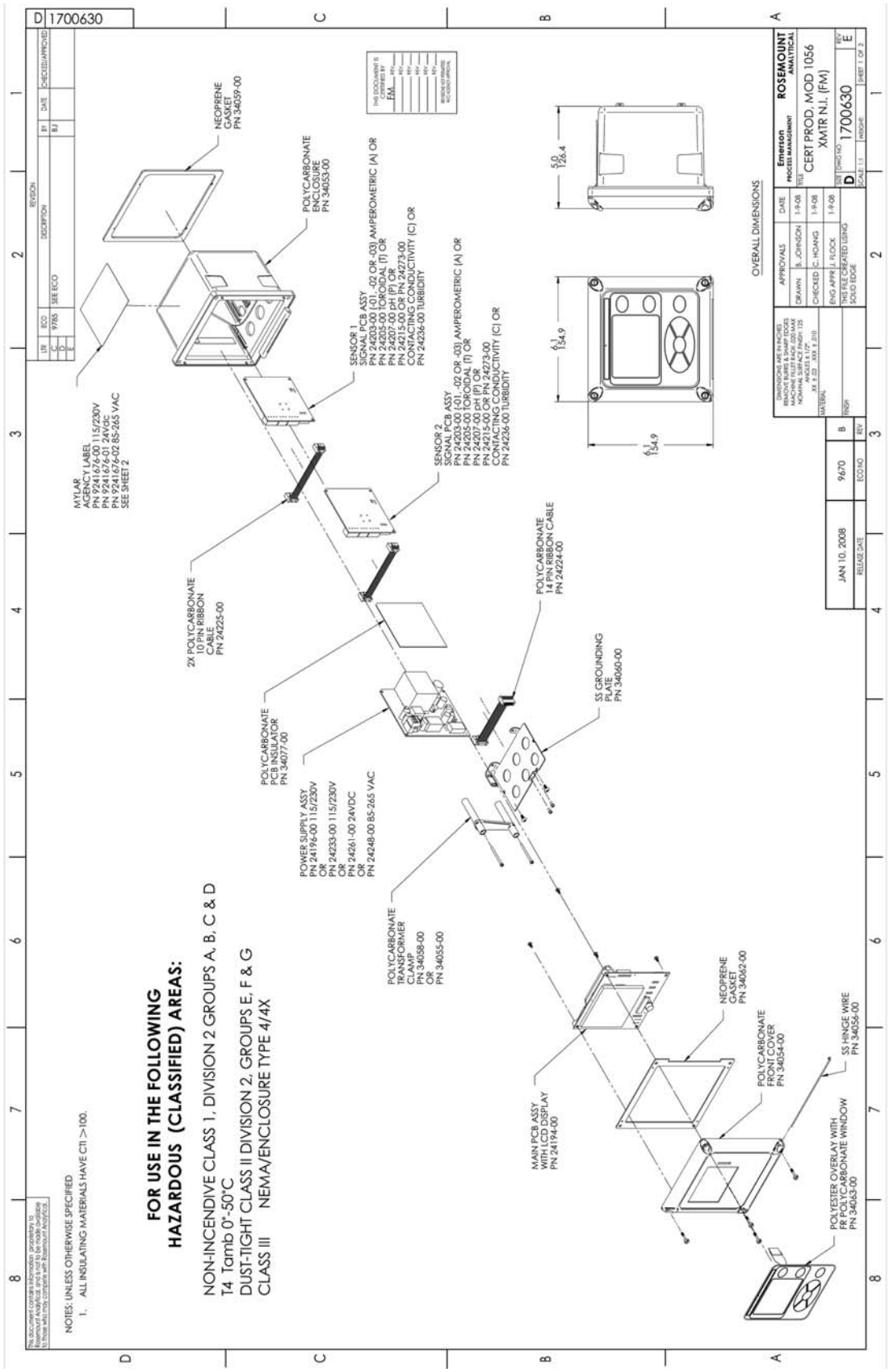

FIGURE 2-5 FM Non-Incendive Class I, Division 2 Certified product for selected configurations (for approved models, see Fig. 2-6)

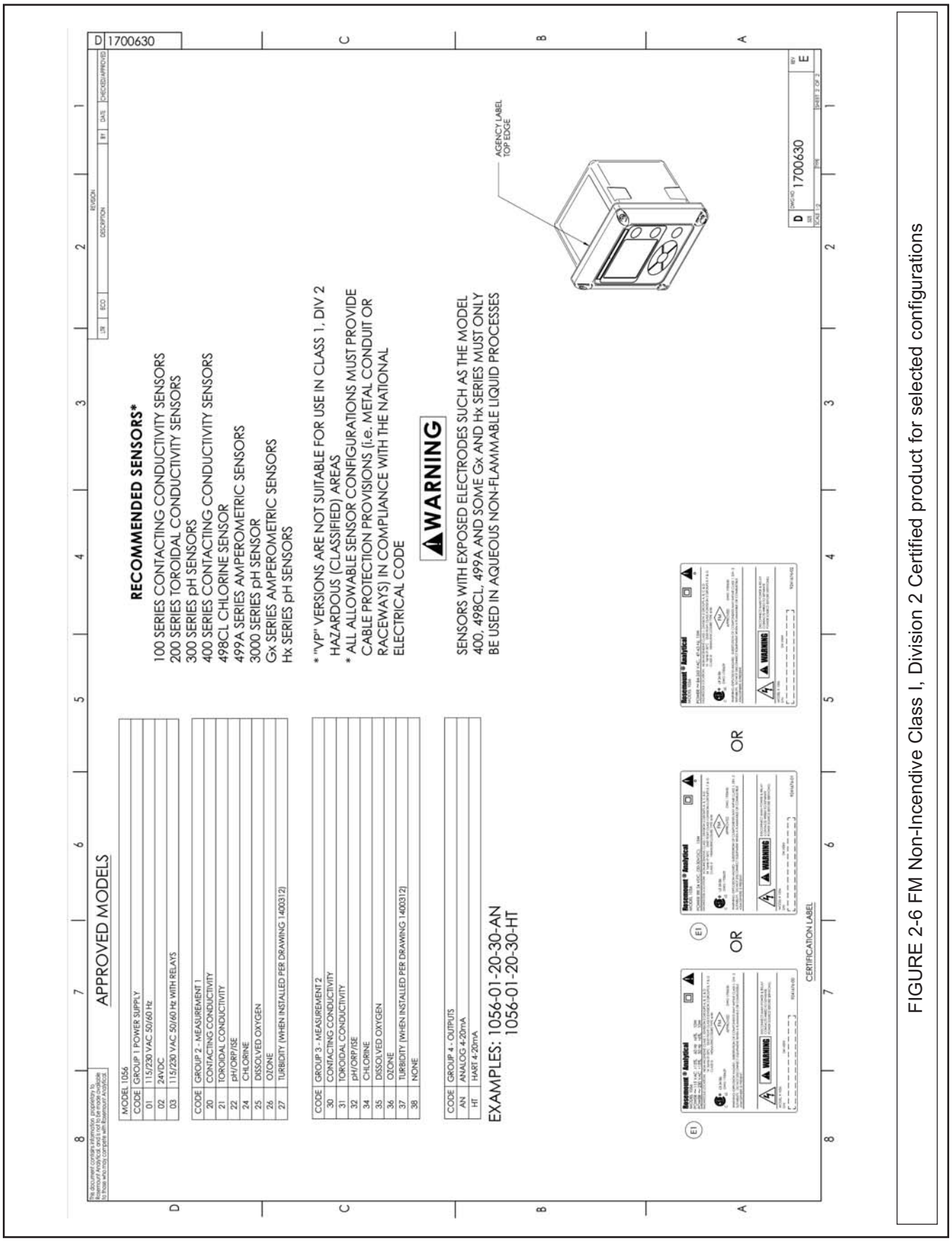

FIGURE 2-6 FM Non-Incendive Class I, Division 2 Certified product for selected configurations

This page left blank intentionally

SECTION 3.0.
WIRING

3.1 GENERAL
3.2 PREPARING CONDUIT OPENINGS
3.3 PREPARING SENSOR CABLE
3.4 POWER, OUTPUT, AND SENSOR CONNECTIONS

3.1 GENERAL

The Model 1056 is easy to wire. It includes removable connectors and slide-out signal input boards. The front panel is hinged at the bottom. The panel swings down for easy access to the wiring locations.

3.1.1. Removable connectors and signal input boards

Model 1056 uses removable signal input boards and communication boards for ease of wiring and installation. Each of the signal input boards can be partially or completely removed from the enclosure for wiring. The Model 1056 has three slots for placement of up to two signal input boards and one communication board.

Slot 1-Left	Slot 2 – Center	Slot 3 – Right
Comm. board	Input Board 1	Input Board 2

3.1.2. Signal Input boards

Slots 2 and 3 are for signal input measurement boards. Wire the sensor leads to the measurement board following the lead locations marked on the board. After wiring the sensor leads to the signal board, carefully slide the wired board fully into the enclosure slot and take up the excess sensor cable through the cable gland. Tighten the cable gland nut to secure the cable and ensure a sealed enclosure.

3.1.3. Digital Communication boards

HART and Profibus DP communication boards will be available in the future as options for Model 1056 digital communication with a host. The HART board supports Bell 202 digital communications over an analog 4-20mA current output. Profibus DP is an open communications protocol which operates over a dedicated digital line to the host.

3.1.4 Alarm relays

Four alarm relays are supplied with the switching power supply (85 to 265VAC, -03 order code) and the 24VDC power supply (20-30VDC, -02 order code). All relays can be used for process measurement(s) or temperature. Any relay can be configured as a fault alarm instead of a process alarm. Each relay can be configured independently and each can be programmed as an interval timer, typically used to activate pumps or control valves. As process alarms, alarm logic (high or low activation or USP*) and deadband are user-programmable. Customer-defined failsafe operation is supported as a programmable menu function to allow all relays to be energized or not-energized as a default condition upon powering the analyzer.
The USP* alarm can be programmed to activate when the conductivity is within a user-selectable percentage of the limit. USP alarming is available only when a contacting conductivity measurement board is installed.

3.2 PREPARING CONDUIT OPENINGS

There are six conduit openings in all configurations of Model 1056. (Note that four of the openings will be fitted with plugs upon shipment.)

Conduit openings accept 1/2-inch conduit fittings or PG13.5 cable glands. To keep the case watertight, block unused openings with NEMA 4X or IP65 conduit plugs.

NOTE: Use watertight fittings and hubs that comply with your requirements. Connect the conduit hub to the conduit before attaching the fitting to the analyzer.

3.3 PREPARING SENSOR CABLE

The Model 1056 is intended for use with all Rosemount Analytical sensors. Refer to the sensor installation instructions for details on preparing sensor cables.

3.4 POWER, OUTPUT, AND SENSOR CONNECTIONS

3.4.1 Power wiring

Three Power Supplies are offered for Model 1056:

a. 115/230VAC Power Supply (-01 ordering code)

b. 24VDC (20 – 30V) Power Supply (-02 ordering code)

c. 85 – 265 VAC Switching Power Supply (-03 ordering code)

AC mains (115 or 230V) leads and 24VDC leads are wired to the Power Supply board which is mounted vertically on the left side of the main enclosure cavity. Each lead location is clearly marked on the Power Supply board. Wire the power leads to the Power Supply board using the lead markings on the board.

The grounding plate is connected to the earth terminal of power supply input connector TB1 on the -01 (115/230VAC) and -03 (85-265VAC) power supplies. The green colored screws on the grounding plate are intended for connection to some sensors to minimize radio frequency interference. The green screws are not intended to be used for safety purposes.

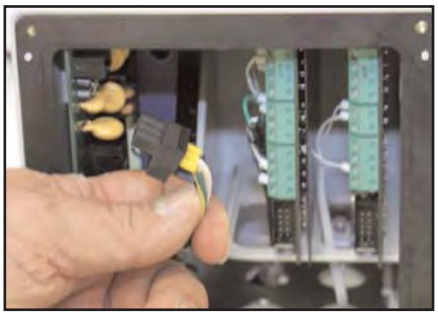

115/230VAC Power Supply (-01 ordering code) is shown below:

⚠CAUTION

AC Power switch shipped in the 230VAC position.
Adjust switch upwards to 115VAC position for 110VAC – 120VAC operation.

Figure 3-1

24VDC Power Supply (-02 ordering code) is shown below:

This power supply automatically detects DC power and accepts 20VDC to 30VDC inputs.
Four programmable alarm relays are included.

Figure 3-2

Switching AC Power Supply (-03 ordering code) is shown below:

This power supply automatically detects AC line conditions and switches to the proper line voltage and line frequency.
Four programmable alarm relays are included.

Figure 3-3

3.4.2 Current Output wiring

All instruments are shipped with two 4-20mA current outputs. Wiring locations for the outputs are on the Main board which is mounted on the hinged door of the instrument. Wire the output leads to the correct position on the Main board using the lead markings (+/positive, -/negative) on the board. Male mating connectors are provided with each unit.

Figure 3.4

3.4.3 Alarm relay wiring

Four alarm relays are supplied with the switching power supply (85 to 265VAC, -03 order code) and the 24VDC power supply (20-30VDC, -02 order code). Wire the relay leads on each of the independent relays to the correct position on the power supply board using the printed lead markings (NO/Normally Open, NC/Normally Closed, or Com/Common) on the board. See Fig 3-4.

NO1	RELAY 1
COM1	
NC1	
NO2	RELAY 2
COM2	
NC2	
NO3	RELAY 3
COM3	
NC3	
NO4	RELAY 4
COM4	
NC4	

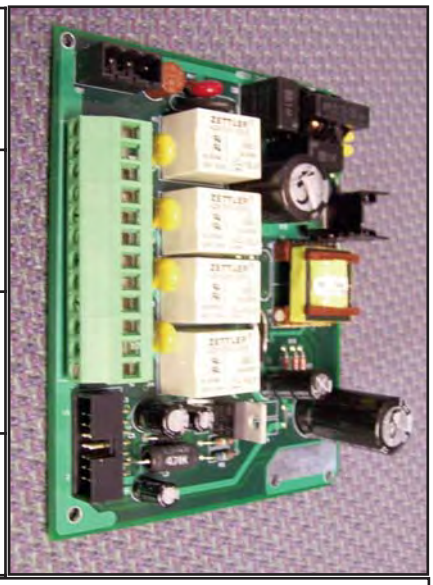

Figure 3-5 Alarm Relay Wiring for Model 1056 Switching Power Supply (-03 Order Code)

3.4.4 Sensor wiring to signal boards

Wire the correct sensor leads to the measurement board using the lead locations marked directly on the board. After wiring the sensor leads to the signal board, carefully slide the wired board fully into the enclosure slot and take up the excess sensor cable through the cable gland.

For best EMI/RFI protection use shielded output signal cable enclosed in an earth-grounded metal conduit. Connect the shield to earth ground. AC wiring should be 14 gauge or greater. Provide a switch or breaker to disconnect the analyzer from the main power supply. Install the switch or breaker near the analyzer and label it as the disconnecting device for the analyzer.

Keep sensor and output signal wiring separate from power wiring. Do not run sensor and power wiring in the same conduit or close together in a cable tray.

⚠WARNING

RISK OF ELECTRICAL SHOCK

Electrical installation must be in accordance with the National Electrical Code (ANSI/NFPA-70) and/or any other applicable national or local codes.

Sec. 3.4 Signal board wiring

Figure 3-6 Contacting Conductivity signal board and Sensor cable leads

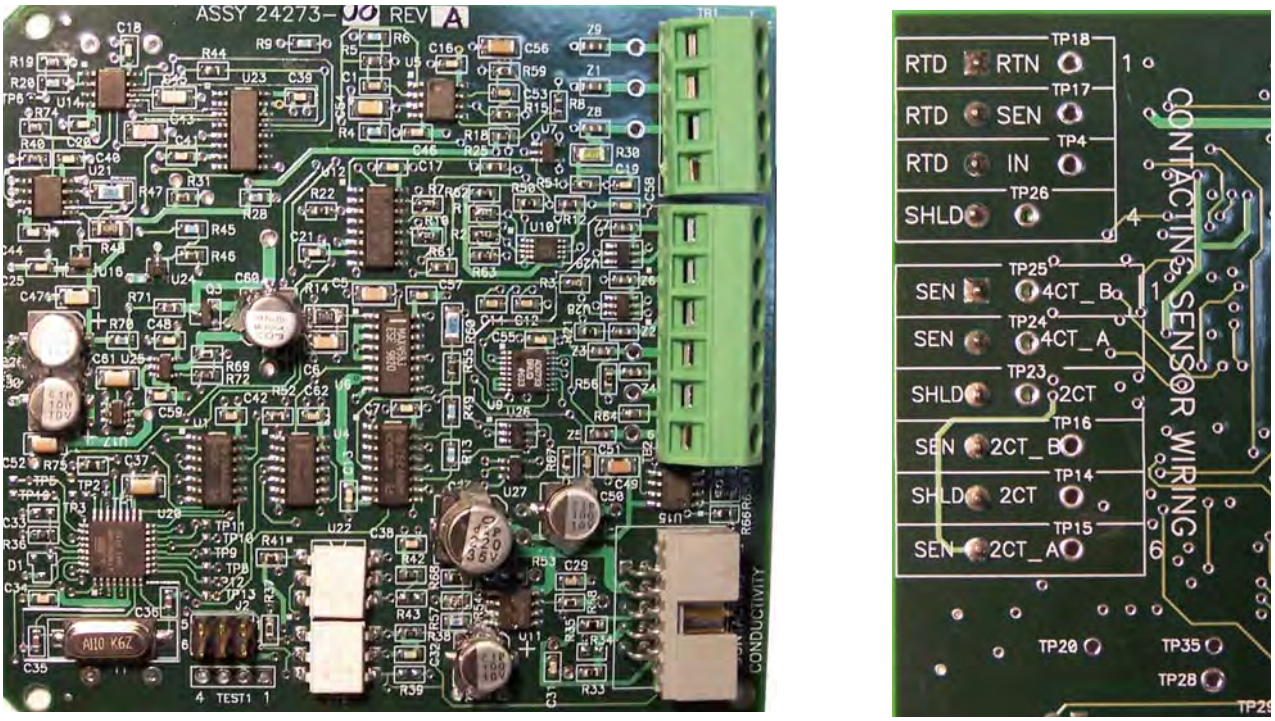

Figure 3-7 Toroidal Conductivity Signal board and Sensor cable leads

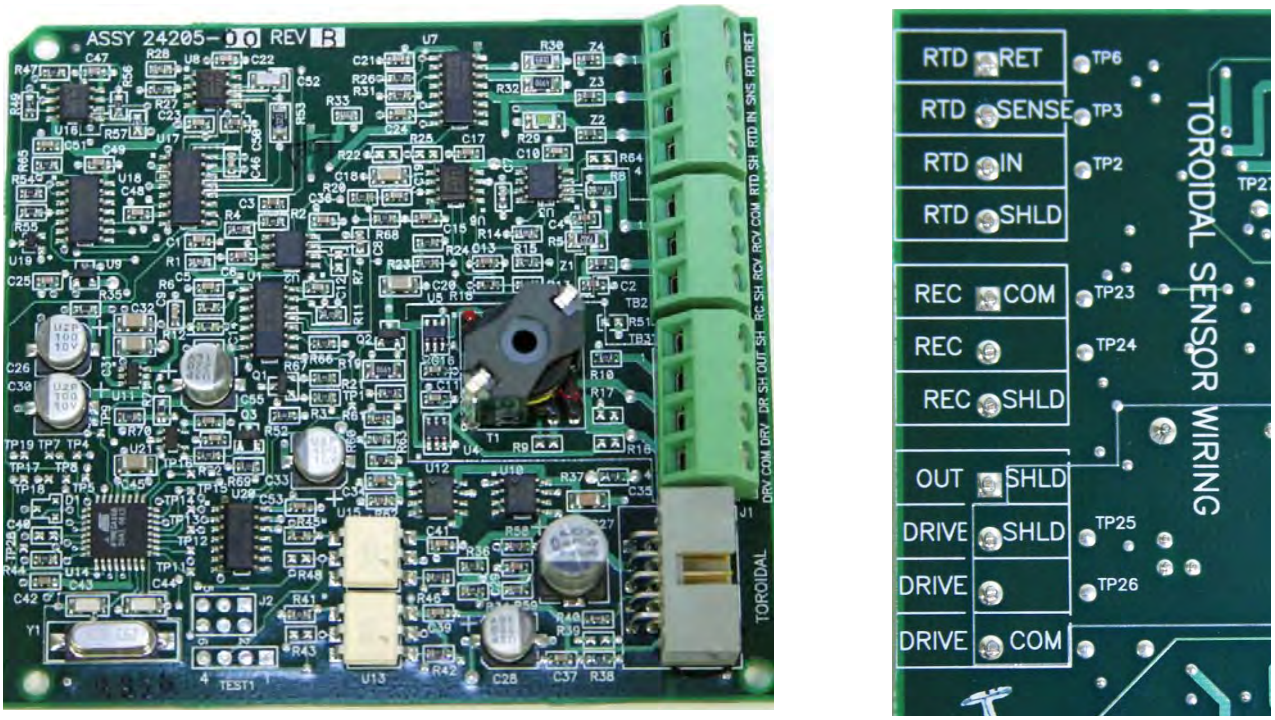

Figure 3-8 pH/ORP/ISE signal board and Sensor cable leads

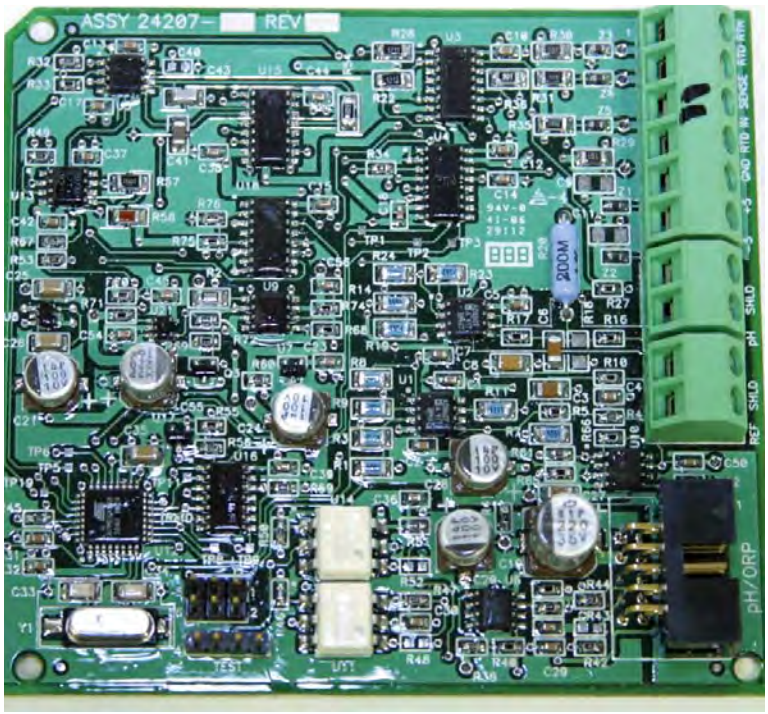

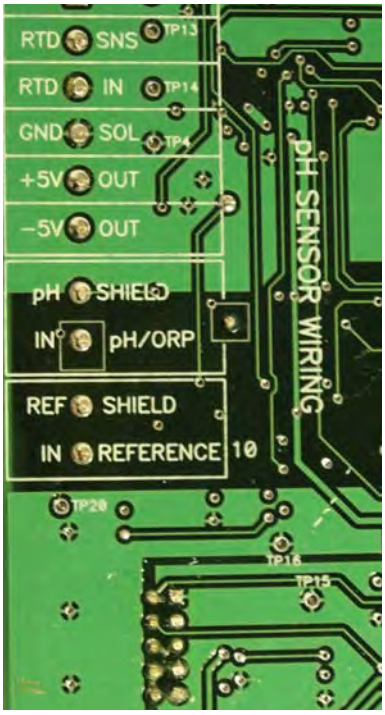

Figure 3-9 Amperometric signal (Chlorine, Oxygen, Ozone) board and Sensor cable leads

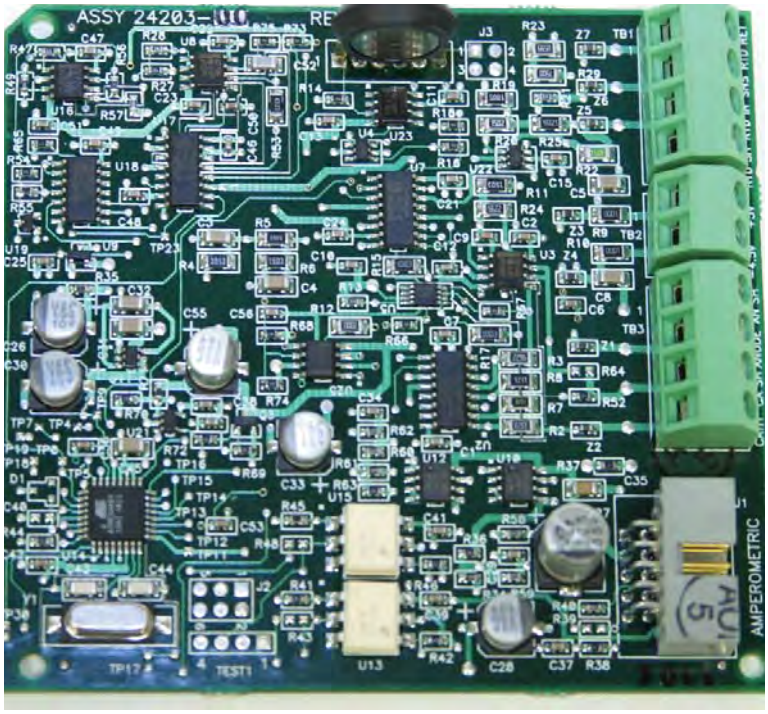

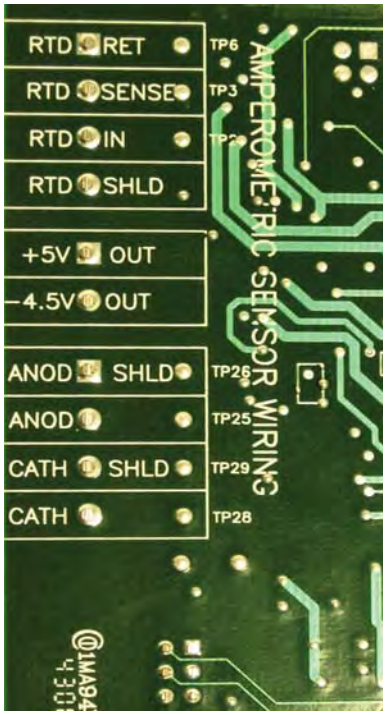

Figure 3-10 Turbidity signal board with plug-in Sensor connection

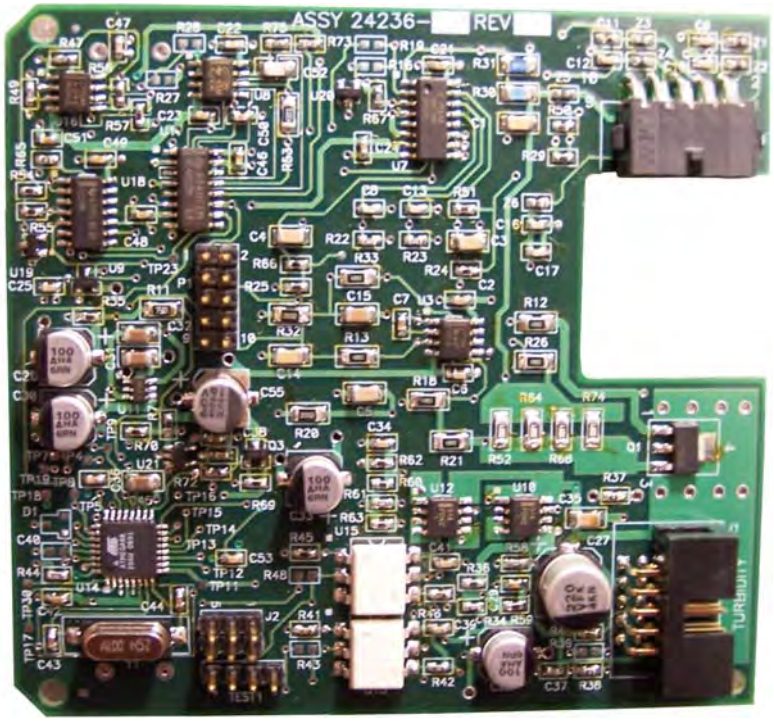

Figure 3-11 Flow/Current Input signal board and Sensor cable leads

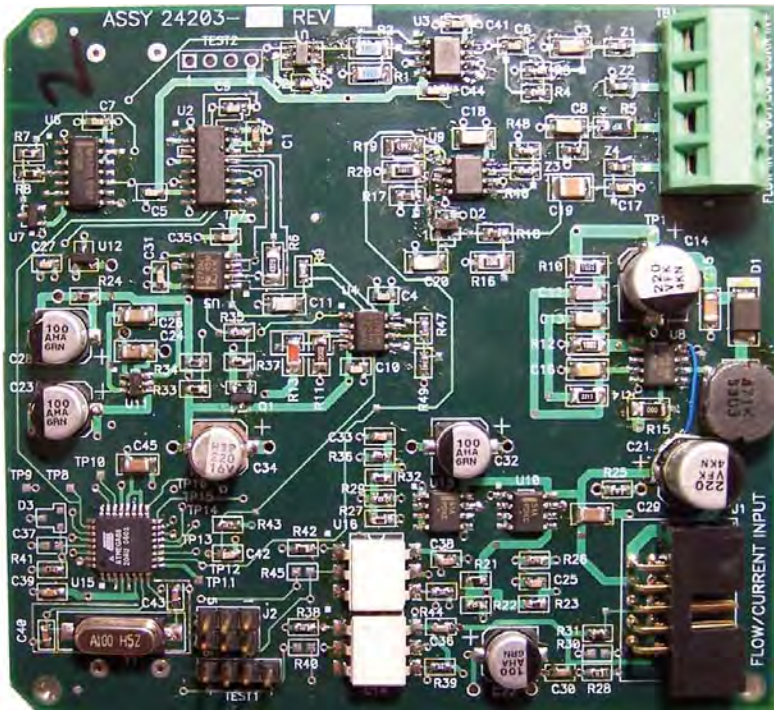

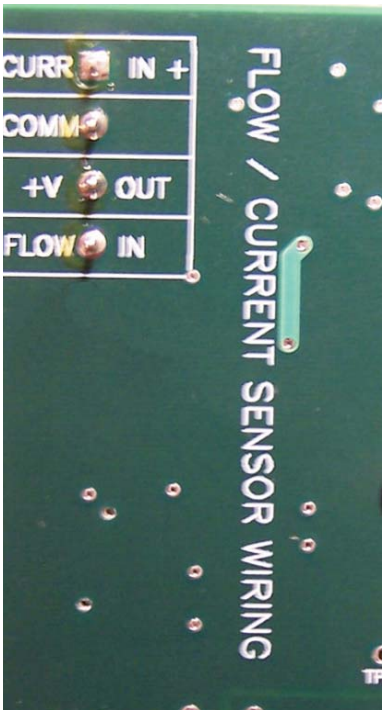

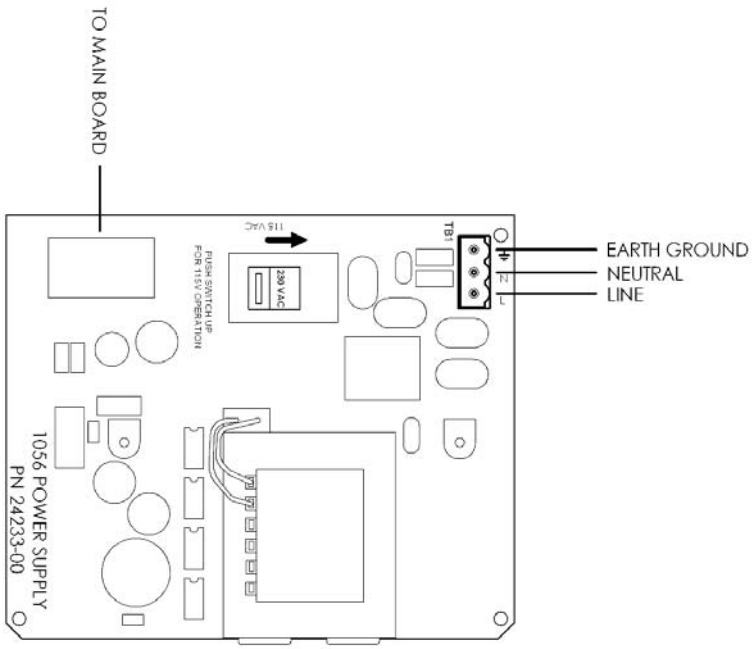

FIGURE 3-12 Power Wiring for Model 1056 115/230VAC Power Supply (-01 Order Code)

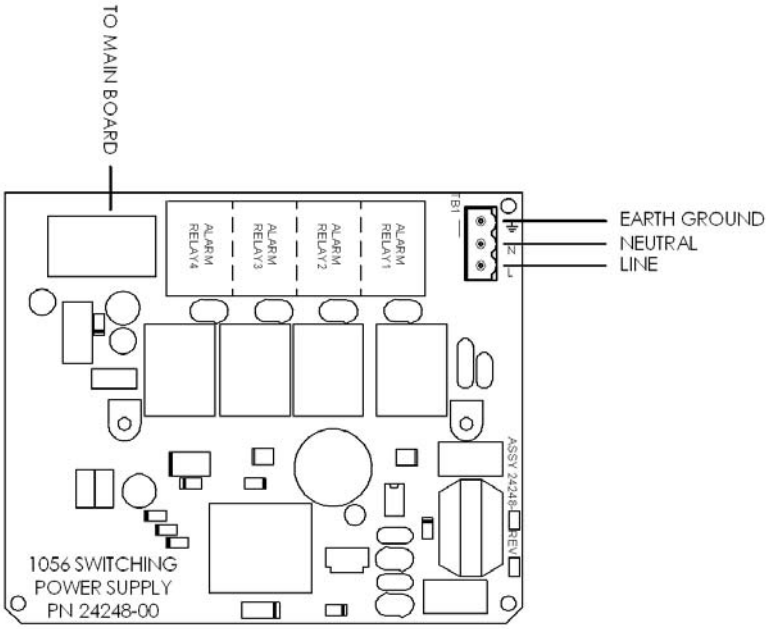

FIGURE 3-13 Power Wiring for Model 1056 85-265 VAC Power Supply (-03 ordering code)

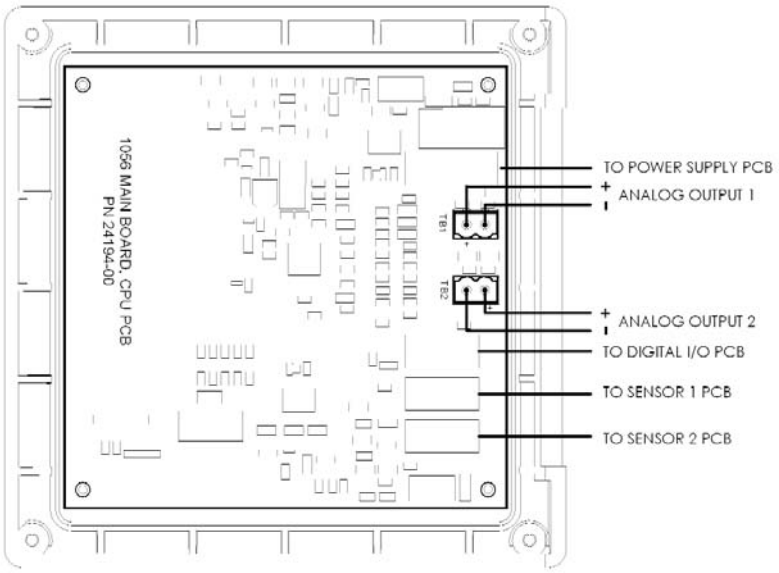

FIGURE 3-14 Output Wiring for Model 1056 Main PCB

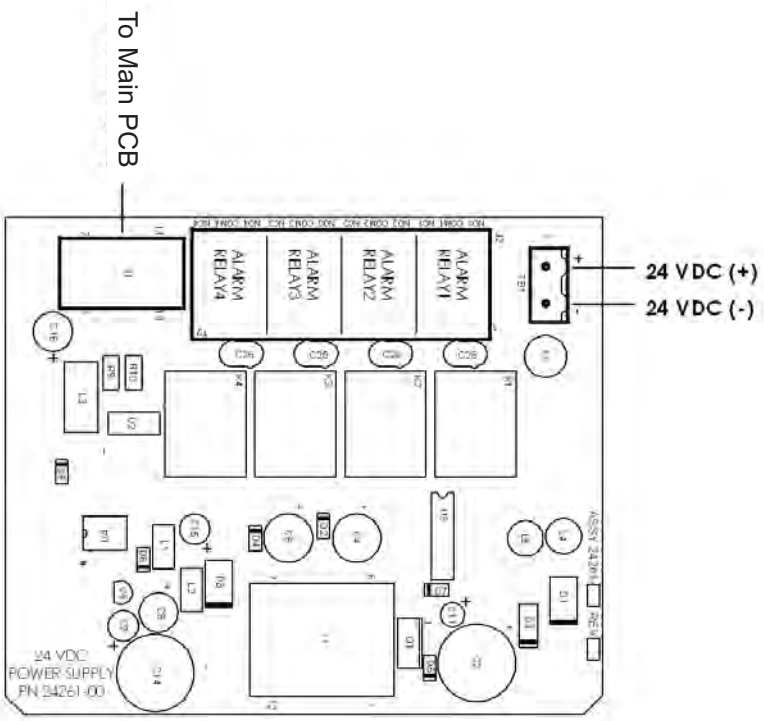

FIGURE 3-15 Power Wiring for Model 1056 24VDC Power Supply (-02 ordering code)

SECTION 4.0
DISPLAY AND OPERATION

4.1 USER INTERFACE
4.2 KEYPAD
4.3 MAIN DISPLAY
4.4 MENU SYSTEM

4.1 USER INTERFACE

The Model 1056 has a large display which shows two live measurement readouts in large digits and up to four additional process variables or diagnostic parameters concurrently. The display is back-lit and the format can be customized to meet user requirements. The intuitive menu system allows access to Calibration, Hold (of current outputs), Programming, and Display functions by pressing the MENU button. In addition, a dedicated DIAGNOSTIC button is available to provide access to useful operational information on installed sensor(s) and any problematic conditions that might occur. The display flashes Fault and/or Warning when these conditions occur. Help screens are displayed for most fault and warning conditions to guide the user in troubleshooting.

During calibration and programming, key presses cause different displays to appear. The displays are self-explanatory and guide the user step-by-step through the procedure.

4.2 INSTRUMENT KEYPAD

There are 4 Function keys and 4 Selection keys on the instrument keypad.

Function keys:

The **MENU key** is used to access menus for programming and calibrating the instrument. Four top-level menu items appear when pressing the MENU key:

- **Calibrate**: calibrate attached sensors and analog outputs.
- **Hold**: Suspend current outputs.
- **Program**: Program outputs, measurement, temperature, security and reset.
- **Display**: Program display format, language, warnings, and contrast

Pressing MENU always causes the main menu screen to appear. Pressing MENU followed by EXIT causes the main display to appear.

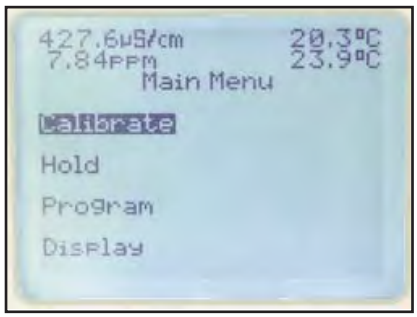

Pressing the **DIAG key** displays active Faults and Warnings, and provides detailed instrument information and sensor diagnostics including: Faults, Warnings, Sensor 1 and 2 information, Out 1 and Out 2 live current values, model configuration string e.g. 1056-01-20-31-AN, Instrument Software version, and AC frequency used. Pressing ENTER on Sensor 1 or Sensor 2 provides useful diagnostics and information (as applicable): Measurement, Sensor Type, Raw signal value, Cell constant, Zero Offset, Temperature, Temperature Offset, selected measurement range, Cable Resistance, Temperature Sensor Resistance, Signal Board software version.

The ENTER key. Pressing ENTER stores numbers and settings and moves the display to the next screen.

The EXIT key. Pressing EXIT returns to the previous screen without storing changes.

Selection keys:
Surrounding the ENTER key, four Selection keys – up, down, right and left, move the cursor to all areas of the screen while using the menus.
Selection keys are used to:

1. select items on the menu screens
2. scroll up and down the menu lists.
3. enter or edit numeric values.
4. move the cursor to the right or left
5. select measurement units during operations

4.3 MAIN DISPLAY

The Model 1056 displays one or two primary measurement values, up to four secondary measurement values, a fault and warning banner, alarm relay flags, and a digital communications icon.

Process measurements:
Two process variables are displayed if two signal boards are installed. One process variable and process temperature is displayed if one signal board is installed with one sensor. The Upper display area shows the Sensor 1 process reading. The Center display area shows the Sensor 2 process reading. For dual conductivity, the Upper and Center display areas can be assigned to different process variables as follows:

Process variables for Upper display- example:	Process variables for Center display- example:
Measure 1	Measure 1
% Reject	Measure 2
% Pass	% Reject
Ratio	% Pass
	Ratio
	Blank

For single input configurations, the Upper display area shows the live process variable and the Center display area can be assigned to Temperature or blank.

Secondary values:
Up to four secondary values are shown in four display quadrants at the bottom half of the screen. All four secondary value positions can be programmed by the user to any display parameter available. Possible secondary values include:

Displayable Secondary Values	
Slope 1	Man Temp 2
Ref Off 1	Output 1 mA
Gl Imp 1	Output 2 mA
Ref Imp 1	Output 1 %
Raw	Output 2 %
mV Input	Measure 1
Temp 1	Blank
Man Temp 1	

Fault and Warning banner:

If the analyzer detects a problem with itself or the sensor the word Fault or Warning will appear at the bottom of the display. A fault requires immediate attention. A warning indicates a problematic condition or an impending failure. For troubleshooting assitance, press Diag.

Formatting the Main Display

The main display screen can be programmed to show primary process variables, secondary process variables and diagnostics.

1. Press MENU
2. Scroll down to **Display**. Press ENTER.
3. **Main Format** will be highlighted. Press ENTER.
4. The sensor 1 process value will be highlighted in reverse video. Press the selection keys to navigate down to the screen sections that you wish to program. Press **ENTER**.
5. Choose the desired display parameter or diagnostic for each of the four display sections in the lower screen.
6. Continue to navigate and program all desired screen sections. Press **MENU** and **EXIT**. The screen will return to the main display.

For single sensor configurations, the default display shows the live process measurement in the upper display area and temperature in the center display area. The user can elect to disable the display of temperature in the center display area using the Main Format function. See Fig. 4-1 to guide you through programming the main display to select process parameters and diagnostics of your choice.

For dual sensor configurations, the default display shows Sensor 1 live process measurement in the upper display area and Sensor 2 live process measurement temperature in the center display area. See Fig. 4-1 to guide you through programming the main display to select process parameters and diagnostics of your choice.

4.4 MENU SYSTEM

Model 1056 uses a scroll and select menu system. Pressing the MENU key at any time opens the top-level menu including Calibrate, Hold, Program and Display functions.

To find a menu item, scroll with the up and down keys until the item is highlighted. Continue to scroll and select menu items until the desired function is chosen. To select the item, press ENTER. To return to a previous menu level or to enable the main live display, press the EXIT key repeatedly. To return immediately to the main display from any menu level, simply press MENU then EXIT.

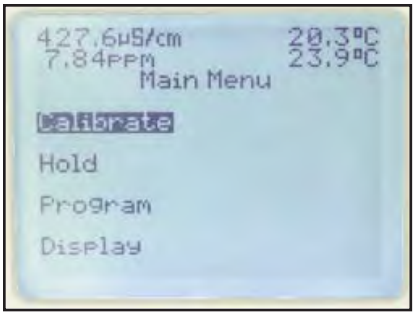

The selection keys have the following functions:

- The Up key (above ENTER) increments numerical values, moves the decimal place one place to the right, or selects units of measurement.
- The Down key (below ENTER) decrements numerical values, moves the decimal place one place to the left, or selects units of measurement
- The Left key (left of ENTER) moves the cursor to the left.
- The Right key (right of ENTER) moves the cursor to the right.

To access desired menu functions, use the “Quick Reference” Figure B. During all menu displays (except main display format and Quick Start), the live process measurements and secondary measurement values are displayed in the top two lines of the Upper display area. This conveniently allows display of the live values during important calibration and programming operations.

Menu screens will time out after two minutes and return to the main live display.

FIGURE 4-1 Formatting the Main Display

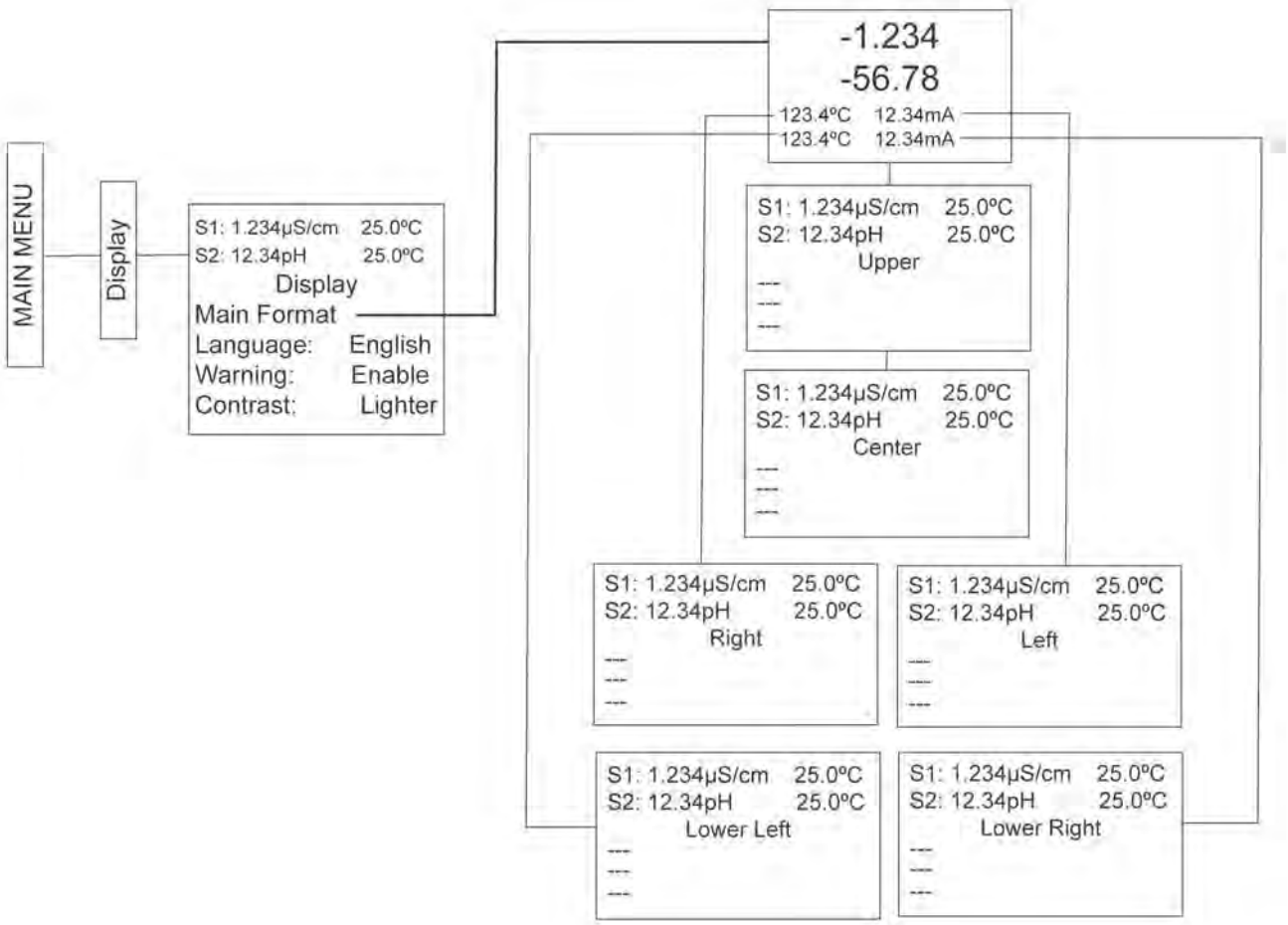

SECTION 5.0.
PROGRAMMING THE ANALYZER - BASICS

5.1 GENERAL
5.2 CHANGING START-UP SETTINGS
5.3 PROGRAMMING TEMPERATURE
5.4 CONFIGURING AND RANGING 4-20MA OUTPUTS
5.5 SETTING SECURITY CODES
5.6 SECURITY ACCESS
5.7 USING HOLD
5.8 RESETTING FACTORY DEFAULTS – RESET ANALYZER
5.9 PROGRAMMING ALARM RELAYS

5.1 GENERAL

Section 5.0 describes the following programming functions:

- Changing the measurement type, measurement units and temperature units.
- Choose temperature units and manual or automatic temperature compensation mode
- Configure and assign values to the current outputs
- Set a security code for two levels of security access
- Accessing menu functions using a security code
- Enabling and disabling Hold mode for current outputs
- Choosing the frequency of the AC power (needed for optimum noise rejection)
- Resetting all factory defaults, calibration data only, or current output settings only

5.2 CHANGING STARTUP SETTINGS

5.2.1 Purpose

To change the measurement type, measurement units, or temperature units that were initially entered in Quick Start, choose the Reset analyzer function (Sec. 5.9) or access the Program menus for sensor 1 or sensor 2 (Sec. 6.0). The following choices for specific measurement type, measurement units are available for each sensor measurement board.

TABLE 5-1. Measurements and Measurement Units

Signal board	**Available measurements**	**Measurements units**:
pH/ORP (-22, -32)	pH, ORP, Redox, Ammonia, Fluoride, Custom ISE	pH, mV (ORP) %, ppm, mg/L, ppb, µg/L, (ISE)
Contacting conductivity (-20, -30)	Conductivity, Resistivity, TDS, Salinity, NaOH (0-12%), HCl (0-15%), Low H2SO4, High H2SO4, NaCl (0-20%), Custom Curve	µS/cm, mS/cm, S/cm % (concentration)
Toroidal conductivity (-21, -31)	Conductivity, Resistivity, TDS, Salinity, NaOH (0-12%), HCl (0-15%), Low H2SO4, High H2SO4, NaCl (0-20%), Custom Curve	µS/cm, mS/cm, S/cm % (concentration)
Chlorine (-24, -34)	Free Chlorine, pH Independ. Free Cl, Total Chlorine, Monochloramine	ppm, mg/L
Oxygen (-25, -35)	Oxygen (ppm), Trace Oxygen (ppb), Percent Oxygen in gas, Salinity	ppm, mg/L, ppb, µg/L % Sat, Partial Pressure, % Oxygen In Gas, ppm Oxygen In Gas
Ozone (-26, -36)	Ozone	ppm, mg/L, ppb, µg/L
Temperature (all)	Temperature	°C. ºF

5.2.2 Procedure.

Follow the Reset Analyzer procedure (Sec 5.8) to reconfigure the analyzer to display new measurements or measurement units. To change the specific measurement or measurement units for each signal board type, refer to the Program menu for the appropriate measurement (Sec. 6.0).

5.3 CHOOSING TEMPERATURE UNITS AND AUTOMATIC/MANUAL TEMPERATURE COMPENSATION

5.3.1 Purpose

Most liquid analytical measurements (except ORP) require temperature compensation. The Model 1056 performs temperature compensation automatically by applying internal temperature correction algorithms. Temperature correction can also be turned off. If temperature correction is off, the Model 1056 uses the temperature entered by the user in all temperature correction calculations.

5.3.2 Procedure.

Follow the menu screens in Fig. 5.1 to select automatic or manual temp compensation, set the manual reference temperature, and to program temperature units as °C or °F.

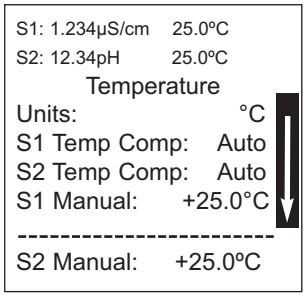

Figure 5-1. Choosing Temp Units and Manual Auto Temp Compensation

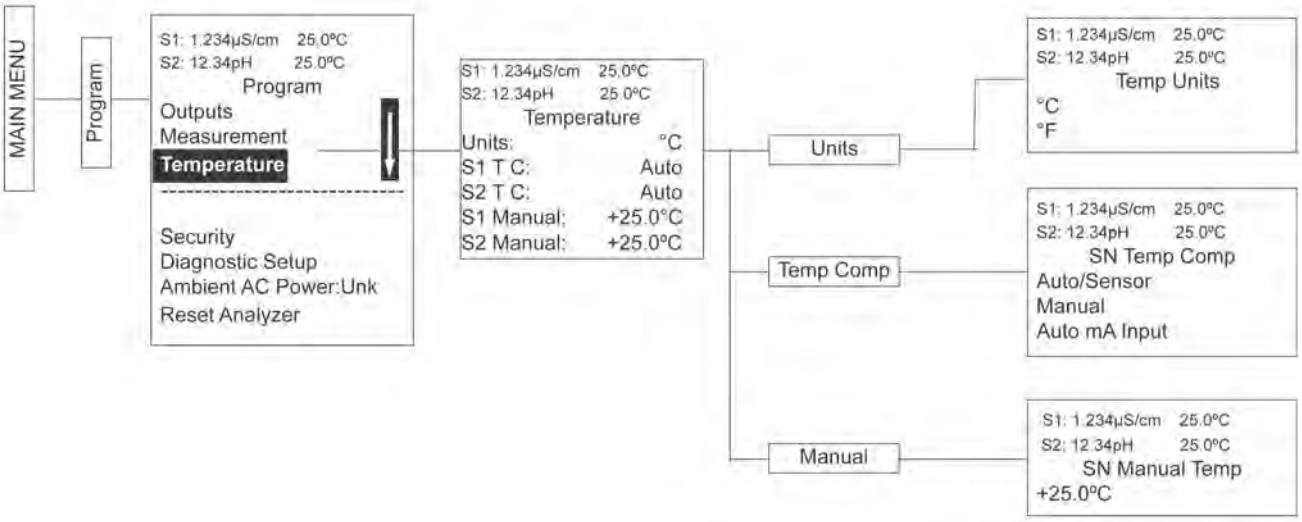

5.4 CONFIGURING AND RANGING THE CURRENT OUTPUTS

5.4.1 Purpose

The Model 1056 accepts inputs from two sensors and has two analog current outputs. Ranging the outputs means assigning values to the low (0 or 4 mA) and high (20 mA) outputs. This section provides a guide for configuring and ranging the outputs. ALWAYS CONFIGURE THE OUTPUTS FIRST.

5.4.2 Definitions

1. CURRENT OUTPUTS. The analyzer provides a continuous output current (4-20 mA or 0-20 mA) directly proportional to the process variable or temperature. The low and high current outputs can be set to any value.
2. ASSIGNING OUTPUTS. Assign a measurement to Output 1 or Output 2.
3. DAMPEN. Output dampening smooths out noisy readings. It also increases the response time of the output. Output dampening does not affect the response time of the display.
4. MODE. The current output can be made directly proportional to the displayed value (linear mode) or directly proportional to the common logarithm of the displayed value (log mode).

5.4.3 Procedure: Configure Outputs.

Under the Program/Outputs menu, the adjacent screen will appear to allow configuration of the outputs. Follow the menu screens in Fig. 5-2 to configure the outputs.

```
S1: 1.234µS/cm    25.0ºC
S2: 12.34pH       25.0ºC
   OutputM Configure
Assign:       S1 Meas
Range:        4-20mA
Scale:        Linear
Dampening:    0sec
-----------------------
Fault Mode: Fixed
Fault Value: 21.00mA
```

5.4.4 Procedure: Assigning Measurements the Low and High Current Outputs

The adjacent screen will appear when entering the Assign function under Program/Output/Configure. These screens allow you to assign a measurement, process value, or temperature input to each output. Follow the menu screens in Fig. 5-2 to assign measurements to the outputs.

```
S1: 1.234µS/cm    25.0ºC
S2: 12.34pH       25.0ºC
   OutputM Assign
S1 Measurement
S1 Temperature
S2 Measurement
S2 Temperature
```

5.4.5 Procedure: Ranging the Current Outputs

The adjacent screen will appear under Program/Output/Range. Enter a value for 4mA and 20mA (or 0mA and 20mA) for each output. Follow the menu screens in Fig. 5-2 to assign values to the outputs.

```
S1: 1.234µS/cm    25.0ºC
S2: 12.34pH       25.0ºC
      Output Range
OM SN 4mA:     0.000µS/cm
OM SN 20mA:    20.00µS/cm
OM SN 4mA:     00.00pH
OM SN 20mA:    14.00pH
```

Figure 5-2. Configuring and Ranging the Current Outputs

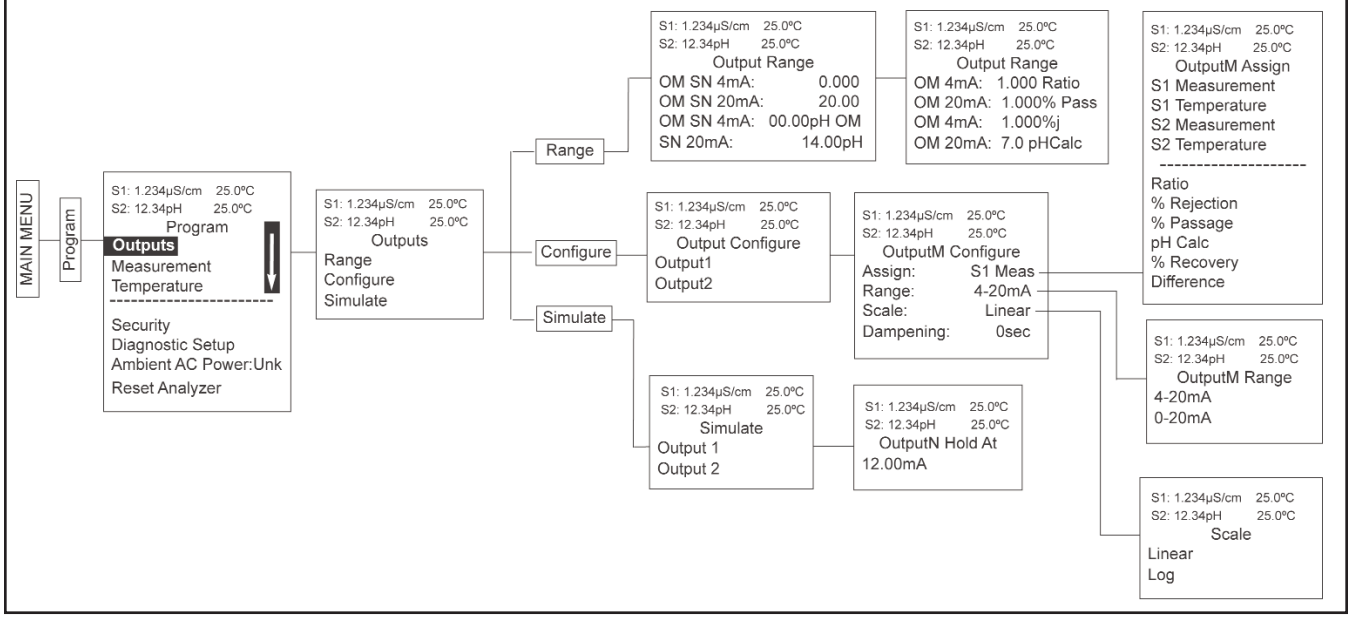

5.5 SETTING A SECURITY CODE

5.5.1 Purpose.

The security codes prevent accidental or unwanted changes to program settings, displays, and calibration. Model 1056 has two levels of security code to control access and use of the instrument to different types of users. The two levels of security are:

- **All:** This is the Supervisory security level. It allows access to all menu functions, including Programming, Calibration, Hold and Display.
- **Calibration/Hold:** This is the operator or technician level menu. It allows access to only calibration and Hold of the current outputs.

5.5.2 Procedure.

1. Press MENU. The main menu screen appears. Choose **Program**.
2. Scroll down to Security. Select **Security**.
3. The security entry screen appears. Enter a three digit security code for each of the desired security levels. The security code takes effect two minutes after the last key stroke. Record the security code(s) for future access and communication to operators or technicians as needed.
4. The display returns to the security menu screen. Press EXIT to return to the previous screen. To return to the main display, press MENU followed by EXIT.

Fig. 5-3 displays the security code screens.

Figure 5-3. Setting a Security Code

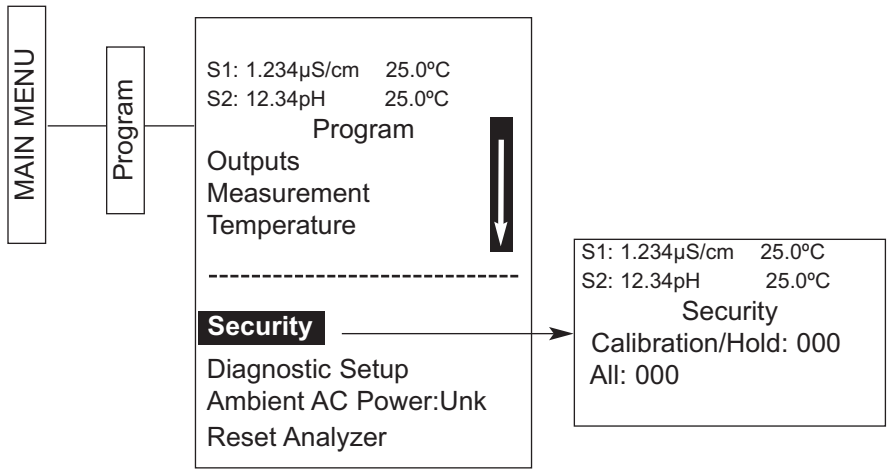

5.6 SECURITY ACCESS

5.6.1 How the Security Code Works

When entering the correct access code for the **Calibration/Hold** security level, the Calibration and Hold menus are accessible. This allows operators or technicians to perform routine maintenance. This security level does not allow access to the Program or Display menus.

When entering the correct access code for **All** security level, the user has access to all menu functions, including Programming, Calibration, Hold and Display.

5.6.2 Procedure.

1. If a security code has been programmed, selecting the Calibrate, Hold, Program or Display top menu items causes the security access screen to appear

2. Enter the three-digit security code for the appropriate security level.

```
S1: 1.234µS/cm    25.0ºC
S2: 12.34pH       25.0ºC
     Security Code
 000
```

3. If the entry is correct, the appropriate menu screen appears. If the entry is incorrect, the **Invalid Code** screen appears. The **Enter Security Code** screen reappears after 2 seconds.

5.7 USING HOLD

5.7.1 Purpose

The analyzer output is always proportional to measured value. To prevent improper operation of systems or pumps that are controlled directly by the current output, place the analyzer in hold before removing the sensor for calibration and maintenance. Be sure to remove the analyzer from hold once calibration is complete. During hold, both outputs remain at the last value. **Once in hold, all current outputs remain on Hold indefinitely.**

5.7.2 Using the Hold Function

To hold the outputs,

1. Press MENU. The main menu screen appears. Choose **Hold.**
2. The **Hold Outputs and Alarms?** screen appears. Choose **Yes** to place the analyzer in hold. Choose **No** to take the analyzer out of hold.
   Note: There are no alarm relays with this con figuration. Current outputs are included with all configurations.
3. The Hold screen will then appear and **Hold will remain on indefinitely until Hold is disabled**.

See figure 5-1 below.

Figure 5-4. Using Hold

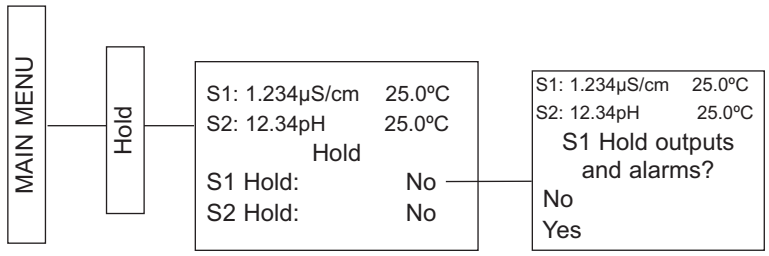

5.8 RESETTING FACTORY DEFAULT SETTINGS

5.8.1 Purpose.
This section describes how to restore factory calibration and default values. The process also clears all fault messages and returns the display to the first Quick Start screen. The Model 1056 offers three options for resetting factory defaults.

a. reset all settings to factory defaults
b. reset sensor calibration data only
c. reset analog output settings only

5.8.2. Procedure.
To reset to factory defaults, reset calibration data only or reset analog outputs only, follow the Reset Analyzer flow diagram.

Figure 5-5. Resetting Factory Default Settings

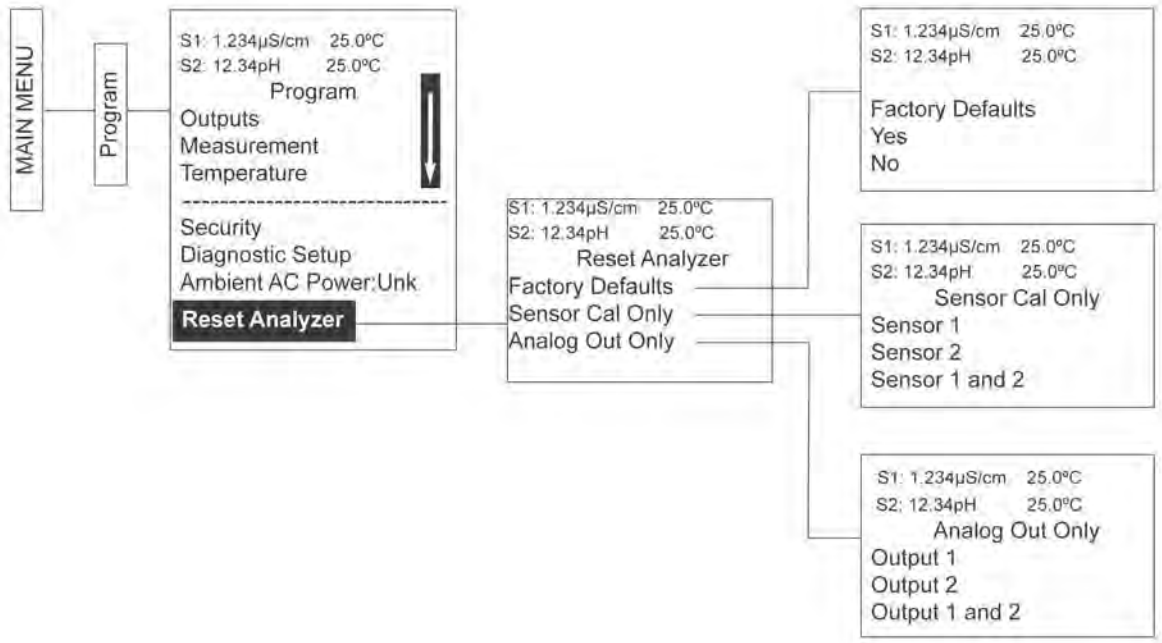

5.9 Programming Alarm Relays

5.9.1 Purpose.

The Model 1056 24VDC (-02 order code) and the AC switching power supply (-03 order code) provide four alarm relays for process measurement or temperature. Each alarm can be configured as a fault alarm instead of a process alarm. Also, each relay can be programmed independently and each can be programmed as an interval timer. This section describes how to configure alarm relays, simulate relay activation, and synchronize timers for the four alarm relays. This section provides details to program the following alarm features:

Sec.	Alarm relay feature:	default	Description
5.9.2	Enter Setpoint	100.0uS/cm	Enter alarm trigger value
5.9.3	Assign measurement	S1 Measure	Select alarm assignment
5.9.4	Set relay logic	High	Program relay to activate at High or Low reading
5.9.5	Deadband:	0.00uS/cm	Program the change in process value after the relay deactivates
5.9.6	USP Safety:	0%↓	Program percentage of the limit to activate the alarm
5.9.7	Normal state:	Open	Program relay default condition as open or closed for failsafe operation
5.9.8	Interval time:	24.0 hr	Time in hours between relay activations
5.9.9	On-Time:	10 min	Enter the time in seconds that the relay is activated.
5.9.10	Recover time:	60 sec	Enter time after the relay deactivation for process recovery
5.9.11	Hold while active:	S1	Holds current outputs during relay activation
5.9.12	Simulate		Manually simulate alarms to confirm relay operation
5.9.13	Synchronize Timers	Yes	Control the timing of two or more relay timers set as Interval timers

Under the **Program/Alarms** menu, this screen will appear to allow configuration of the alarm relays. Follow the menu screens in Fig. XX to configure the outputs.

```
S1: 1.234µS/cm    25.0ºC
S2: 12.34pH       25.0ºC
          Alarms
Configure/Setpoint
Simulate
Synchronize Timers:  Yes
```

This screen will appear to allow selection of a specific alarm relay. Select the desired alarm and press ENTER.

```
S1: 1.234µS/cm    25.0ºC
S2: 12.34pH       25.0ºC
    Configure/Setpoint
Alarm 1
Alarm 2
Alarm 3
Alarm 4
```

This screen will appear next to allow complete programming of each alarm. Factory defaults are displayed as they would appear for an installed contacting conductivity board. USP Safety only appears if alarm logic is set to “USP”. Interval timer, On Time, Recover Time, and Hold While Active only appear if the alarm is configured as an Interval timer.

```
S1: 1.234µS/cm    25.0ºC
S2: 12.34pH       25.0ºC
     AlarmM Settings
Setpoint:      100.0uS/cm
Assign:        S1 Measure
Logic:               High
Deadband:    0.00uS/cm
USP Safety:        0%↓
-------------------------
Interval time:      24.0 hr
On Time:           120 sec
Recover time:       60 sec
Hold while active:  Sens1
```

5.9.2 Procedure – Enter Setpoints

Under the Program/Alarms menu, this screen will appear to allow configuration of the alarm relays. Enter the desired value for the process measurement or temperature at which to activate an alarm event.

```
S1: 1.234µS/cm   25.0ºC
S2: 12.34pH      25.0ºC
 Alarm1  S2 Setpoint
+100.0uS/cm
```

5.9.3 Procedure – Assign Measurement

Under the Alarms Settings menu, this screen will appear to allow assignment of the alarm relays. select an alarm assignment. Additional assignment choices are shown in Figure X-X depending on which measurement board(s) is installed.

```
S1: 1.234µS/cm   25.0ºC
S2: 12.34pH      25.0ºC
     AlarmM Assign:
S1 Measurement
S1 Temperature
S2 Measurement
S2 Temperature
-----------------------
Interval Timer
Fault
Off
```

5.9.4 Procedure – Set Relay Logic

Under the **Alarms Settings** menu, this screen will appear to set the alarm logic. Select the desired relay logic to activate alarms at a High reading or a Low reading. USP Safety only appears if a contacting conductivity board is installed.

```
S1: 1.234µS/cm   25.0ºC
S2: 12.34pH      25.0ºC
     AlarmM Logic:
High
Low
USP
```

5.9.5 Procedure – Deadband

Under the Alarms Settings menu, this screen will appear to program the deadband as a measurement value. Enter the change in the process value needed after the relay deactivates to return to normal (and thereby preventing repeated alarm activation).

```
S1: 1.234µS/cm   25.0ºC
S2: 12.34pH      25.0ºC
   Alarm1 Deadband
+000.5uS/cm
```

5.9.6 Procedure – USP Safety

Under the Alarms Settings menu, this screen will appear to program the USP alarm setting. Enter the percentage below the limit at which to activate the alarm.

```
S1: 1.234µS/cm   25.0ºC
S2: 12.34pH      25.0ºC
  Alarm1 USP Safety
+0%↓
```

5.9.7 Procedure – Normal state

The user can define failsafe condition in software by programming the alarm default state to normally open or normally closed upon power up. To display this alarm configuration item, enter the Expert menus by holding down the EXIT key for 6 seconds while in the main display mode. Select Yes upon seeing the screen prompt: “Enable Expert Menu?”

Under the Alarms Settings menu, this screen will appear to set the normal state of the alarms. Select the alarm condition that is desired each time the analyzer is powering up.

```
S1: 1.234µS/cm   25.0ºC
S2: 12.34pH      25.0ºC
 Alarm2 Normal State
Open
Closed
```

5.9.8 Procedure – Interval time

Under the Alarms Settings menu, this screen will appear to set the interval time. Enter the fixed time in hours between relay activations.

```
S1: 1.234µS/cm    25.0ºC
S2: 12.34pH       25.0ºC
 Alarm1 Interval Time
024.0 hrs
```

5.9.9 Procedure – On time

Under the Alarms Settings menu, this screen will appear to set the relay on time. Enter the time in seconds that the relay is activated.

```
S1: 1.234µS/cm    25.0ºC
S2: 12.34pH       25.0ºC
    Alarm1 On-Time
00.00sec
```

5.9.10 Procedure – Recovery time

Under the Alarms Settings menu, this screen will appear to set the relay recovery time. Enter time after the relay deactivation for process recovery.

```
S1: 1.234µS/cm    25.0ºC
S2: 12.34pH       25.0ºC
   Alarm1  Recovery
060sec
```

5.9.11 Procedure – Hold while active

Under the Alarms Settings menu, this screen will appear to program the feature that Holds the current outputs while alarms are active. Select to hold the current outputs for Sensor 1, Sensor 2 or both sensors while the relay is activated.

```
S1: 1.234µS/cm    25.0ºC
S2: 12.34pH       25.0ºC
 Alarm1 Hold while active
Sensor 1
Sensor 2
Both
None
```

5.9.12 Procedure – Simulate

Alarm relays can be manually set for the purposes of checking devices such as valves or pumps. Under the Alarms Settings menu, this screen will appear to allow manual forced activation of the alarm relays. Select the desired alarm condition to simulate.

```
S1: 1.234µS/cm    25.0ºC
S2: 12.34pH       25.0ºC
      Simulate Alarm M
Don't simulate
De-energize
Energize
```

5.9.13 Procedure – Synchronize

Under the Alarms Settings menu, this screen will appear to allow Synchronization of alarms that are set to interval timers. Select yes or no to Synchronize two or more timers.

```
S1: 1.234µS/cm    25.0ºC
S2: 12.34pH       25.0ºC
  Synchronize Timers
Yes
No
```

This page left blank intentionally

SECTION 6.0
PROGRAMMING - MEASUREMENTS

6.1 CONFIGURING MEASUREMENTS – INTRODUCTION
6.2 pH
6.3 ORP
6.4 CONTACTING CONDUCTIVITY
6.5 TOROIDAL CONDUCTIVITY
6.6 CHLORINE
6.6.1 FREE CHLORINE
6.6.2 TOTAL CHLORINE
6.6.3 MONOCHLORAMINE
6.6.4 pH-INDEPENDENT FREE CHLORINE
6.7 OXYGEN
6.8 OZONE
6.9 TURBIDITY
6.10 FLOW
6.11 CURRENT INPUT

6.1 PROGRAMMING MEASUREMENTS – INTRODUCTION

The Model 1056 automatically recognizes each installed measurement board upon first power-up and each time the analyzer is powered. Completion of Quick Start screens upon first power up enable measurements, but additional steps may be required to program the analyzer for the desired measurement application. This section covers the following programming and configuration functions;

1. Selecting measurement type or sensor type (all sections)
2. Identifying the preamp location (pH-see Sec. 6.2)
3. Enabling manual temperature correction and entering a reference temperature (all sections)
4. Enabling sample temperature correction and entering temperature correction slope (selected sections)
5. Defining measurement display resolution (pH and amperometric)
6. Defining measurement display units (all sections)
7. Adjusting the input filter to control display and output reading variability or noise (all sections)
8. Selecting a measurement range (conductivity – see Sec's 6.4, 6.5)
9. Entering a cell constant for a contacting or toroidal sensor (see Sec's 6.4, 6.5)
10. Entering a temperature element/RTD offset or temperature slope (conductivity-see Sec's 6.4)
11. Creating an application-specific concentration curve (conductivity-see Sec's 6.4, 6.5)
12. Enabling automatic pH correction for free chlorine measurement (Sec. 6.6.1)

To fully configure the analyzer for each installed measurement board, you may use the following:

1. Reset Analyzer function to reset factory defaults and configure the measurement board to the desired measurement. Follow the Reset Analyzer menu (Fig. 5-5) to reconfigure the analyzer to display new measurements or measurement units.
2. Program menus to adjust any of the programmable configuration items. Use the following configuration and programming guidelines for the applicable measurement.

6.2 pH MEASUREMENT PROGRAMMING

6.2.1 Description

This section describes how to configure the Model 1056 analyzer for pH measurements. The following programming and configuration functions are covered.

TABLE 6-1. pH Measurement Programming

Measure	Sec.	Menu function: default setting	Description
pH	6.2.2	Measurement type: pH	Select pH, ORP, Redox, Ammonia, Fluoride, Custom ISE
	6.2.3	Preamp location: Analyzer	Identify preamp location
	6.2.4	Solution temperature correction Off	Select Off, ultra-pure, high pH, custom
	6.2.5	Temp coefficient (custom)	Enter the temp coefficient
	6.2.6	Resolution: 0.01pH	Select 0.01pH or 0.1pH for pH display resolution
	6.2.7	Filter: 4 sec	Override the default input filter, enter 0-999 seconds
	6.2.8	Reference Z: Low	Select low or high reference impedance

A detailed flow diagram for pH programming is provided at the end of Sec. 6 to guide you through all basic programming and configuration functions.

To configure the pH measurement board:

1. Press **MENU**
2. Scroll down to **Program**. Press ENTER.
3. Scroll down to Measurement. Press ENTER.
4. Select **Sensor 1** or **Sensor 2** corresponding to pH. Press ENTER.

The adjacent screen format will appear (factory defaults are shown). To program any function, scroll to the desired item and press ENTER.

```
S1: 1.234µS/cm   25.0ºC
S2: 12.34pH      25.0ºC
     SN Configure
Measure:         pH
Preamp:      Analyzer
Sol'n Temp Corr:  Off
T Coeff:  -0.029pH/°C
------------------------
Resolution:    0.01pH
Filter:          4 sec
Reference Z:     Low
```

The following sub-sections provide you with the initial display screen that appears for each configuration function. Use the **flow diagram for pH programming** at the end of Sec. 6 and the Model 1056 live screen prompts for each function to complete configuration and programming.

6.2.2 Measurement

The display screen for selecting the measurement is shown. The default value is displayed in **bold type**. Refer to the pH/ORP Programming flow diagram to complete this function.

```
S1: 1.234µS/cm   25.0ºC
S2: 12.34pH      25.0ºC
   SN Measurement
pH
ORP
Redox
Ammonia
--------------------
Fluoride
Custom ISE
```

6.2.3 Preamp

The display screen for identifying the Preamp location is shown. The default value is displayed in **bold type**. Refer to the pH/ORP Programming flow diagram to complete this function.

```
S1: 1.234µS/cm   25.0ºC
S2: 12.34pH      25.0ºC
     SN Preamp
Analyzer
Sensor/JBox
```

6.2.4 Solution Temperature Correction

The display screen for selecting the Solution temperature correction algorithm is shown. The default value is displayed in **bold type**. Refer to the pH/ORP Programming flow diagram to complete this function.

```
S1: 1.234µS/cm    25.0ºC
S2: 12.34pH       25.0ºC
  SN Sol'n Temp Corr.
Off
Ultra Pure Water
High pH
Custom
```

6.2.5 Temperature Coefficient

The display screen for entering the custom solution temperature coefficient is shown. The default value is displayed in **bold type.** Refer to the pH/ORP Programming flow diagram to complete this function.

```
S1: 1.234µS/cm    25.0ºC
S2: 12.34pH       25.0ºC
 SN Sol'n Temp Coeff.
- 0.032pH/ºC
```

6.2.6 Resolution

The display screen for selecting 0.01pH or 0.1pH for pH display resolution is shown. The default value is displayed in **bold type**. Refer to the pH/ORP Programming flow diagram to complete this function.

```
S1: 1.234µS/cm    25.0ºC
S2: 12.34pH       25.0ºC
      SN Resolution
0.01pH
0.1pH
```

6.2.7 Filter

The display screen for entering the input filter value in seconds is shown. The default value is displayed in **bold type.** Refer to the pH/ORP Programming flow diagram to complete this function.

```
S1: 1.234µS/cm    25.0ºC
S2: 12.34pH       25.0ºC
      SN Input filter
04 sec
```

6.2.8 Reference Impedence

The display screen for selecting Low or High Reference impedance is shown. The default value is displayed in **bold type**. Refer to the pH/ORP Programming flow diagram to complete this function.

```
S1: 1.234µS/cm    25.0ºC
S2: 12.34pH       25.0ºC
     SN Reference Z
Low
High
```

6.3 ORP MEASUREMENT PROGRAMMING

6.3.1 Description

The section describes how to configure the Model 1056 analyzer for ORP measurements. The following programming and configuration functions are covered:

TABLE 6-2. ORP Measurement Programming

Measure	Sec.	Menu function:	default	Description
ORP	6.3.2	Measurement type:	pH	Select pH, ORP, Redox, Ammonia, Fluoride, Custom ISE
	6.3.3	Preamp location:	Analyzer	Identify preamp location
	6.3.4	Filter:	4 sec	Override the default input filter, enter 0-999 seconds
	6.3.5	Reference Z:	Low	Select low or high reference impedance

A detailed flow diagram for ORP programming is provided at the end of Sec. 6 to guide you through all basic programming and configuration functions.

To configure the ORP measurement board:

1. Press **MENU**
2. Scroll down to **Program**. Press ENTER.
3. Scroll down to **Measurement**. Press ENTER.
4. Select **Sensor 1** or **Sensor 2** corresponding to ORP. Press ENTER.

The adjacent screen format will appear (factory defaults are shown). To program any displayed function, scroll to the desired item and press ENTER.

```
S1: 1.234µS/cm   25.0ºC
S2: 12.34pH      25.0ºC
    SN Configure
Measure:          pH
Preamp: Analyzer
Flter:          4 sec
Reference Z:    Low
```

The following sub-sections provide you with the initial display screen that appears for each configuration function. Use the **flow diagram for ORP programming** at the end of Sec. 6 and the Model 1056 live screen prompts for each function to complete configuration and programming.

6.3.2 Measurement

The display screen for selecting the measurement is shown. The default value is displayed in **bold type**. Refer to the pH/ORP Programming flow diagram to complete this function.

```
S1: 1.234µS/cm   25.0ºC
S2: 12.34pH      25.0ºC
  SN Measurement
pH
ORP
Redox
Ammonia
-----------------------
Fluoride
Custom ISE
```

6.3.3 Preamp

The display screen for identifying the Preamp location is shown. The default value is displayed in **bold type**. Refer to the pH/ORP Programming flow diagram to complete this function.

```
S1: 1.234µS/cm   25.0ºC
S2: 12.34pH      25.0ºC
      SN Preamp
Analyzer
Sensor/JBox
```

6.3.4 Filter

The display screen for entering the input filter value in seconds is shown. The default value is displayed in **bold type**. Refer to the pH/ORP Programming flow diagram to complete this function.

```
S1: 1.234µS/cm   25.0ºC
S2: 12.34pH      25.0ºC
    SN Input filter
04 sec
```

6.3.5 Reference Impedence

The display screen for Selecting Low or high Reference impedance is shown. The default value is displayed in **bold type**. Refer to the pH/ORP Programming flow diagram to complete this function.

```
S1: 1.234µS/cm   25.0ºC
S2: 12.34pH      25.0ºC
    SN Reference Z
Low
High
```

6.4 CONTACTING CONDUCTIVITY MEASUREMENT PROGRAMMING

6.4.1 Description

The section describes how to configure the Model 1056 analyzer for conductivity measurements using contacting conductivity sensors. The following programming and configuration functions are covered.

TABLE 6-3. Contacting Conductivity Measurement Programming

Measure	Sec.	Menu function:	default	Description
Contacting Conductivity	6.4.2	Type:	2-Electrode	Select 2-Electrode or 4-Electrode type sensors
	6.4.3	Measure:	Conductivity	Select Conductivity, Resistivity, TDS. Salinity or % conc
	6.4.4	Range:	Auto	Select measurement Auto-range or specific range
	6.4.5	Cell K:	1.00000/cm	Enter the cell Constant for the sensor
	6.4.6	RTD Offset:	0.00ºC	Enter the RTD Offset
	6.4.7	RTD Slope:	0	Enter the RTD Slope
	6.4.8	Temp Comp:	Slope	Select Temp Comp: Slope, Neutral Salt, Cation or Raw
	6.4.9	Slope:	2.00%/°C	Enter the linear temperature coefficient
	6.4.10	Ref Temp:	25.0°C	Enter the Reference temp
	6.4.11	Filter:	2 sec	Override the default input filter, enter 0-999 seconds
	6.4.12	Custom	Setup	Enter 2-5 data points in ppm and µS/cm for custom curves
	6.4.13	Cal Factor:	0.95000/cm	Enter the Cal Factor for 4-Electrode sensors from the sensor tag

A detailed flow diagram for contacting conductivity programming is provided at the end of Sec. 6 to guide you through all basic programming and configuration functions.

To configure the contacting conductivity measurement board:

1. Press **MENU**
2. Scroll down to **Program**. Press ENTER.
3. Scroll down to **Measurement**. Press ENTER.
4. Select **Sensor 1** or **Sensor 2** corresponding to contacting conductivity. Press ENTER.

The adjacent screen format will appear (factory defaults are shown). To program any displayed function, scroll to the desired item and press ENTER.

```
S1: 1.234µS/cm   25.0ºC
S2: 12.34pH      25.0ºC
     SN Configure
Type:      2-Electrode
Measure:       Cond
Range:         Auto
Cell K:   1.00000/cm
RTD Offset:  0.00ºC
RTD Slope:        0
Temp Comp:   Slope
Slope:     2.00%/°C
Ref Temp:    25.0°C
Filter:        2 sec
Custom Setup
```

The following sub-sections provide you with the initial display screen that appears for each configuration function. Use the **flow diagram for contacting conductivity programming** at the end of Sec. 6 and the Model 1056 live screen prompts for each function to complete configuration and programming.

6.4.2 Sensor Type

The display screen for selecting 2-Electrode or 4-Electrode type sensors is shown. The default value is displayed in **bold type**. Refer to the contacting conductivity Programming flow diagram to complete this function.

```
S1: 1.234µS/cm   25.0ºC
S2: 12.34pH      25.0ºC
     SN Type
 2-Electrode
 4-Electrode
```

6.4.3 Measure

The display screen for selecting the measurement is shown. The default value is displayed in **bold type**. Refer to the contacting conductivity Programming flow diagram to complete this function.

```
S1: 1.234µS/cm   25.0ºC
S2: 12.34pH      25.0ºC
  SN Measurement
 Conductivity
 Resistivity
 TDS
 Salinity
 ----------------------
 NaOH (0-12%)
 HCl (0-15%)
 Low H2SO4
 High H2SO4
 NaCl (0-20%)
 Custom Curve
```

6.4.4 Range

The display screen for Selecting Auto-ranging or a specific range is shown. The default value is displayed in **bold type**. Note: Ranges are shown as conductance, not conductivity. Refer to the contacting conductivity Programming flow diagram to complete this function.

```
S1: 1.234µS/cm   25.0ºC
S2: 12.34pH      25.0ºC
     SN Range
 Auto
 50 µS
 500 µS
 2000 µS
 ----------------------
 20 mS
 200 mS
 600 mS
```

6.4.5 Cell Constant

The display screen for entering a cell Constant for the sensor is shown. The default value is displayed in **bold type**. Refer to the contacting conductivity Programming flow diagram to complete this function.

```
S1: 1.234µS/cm   25.0ºC
S2: 12.34pH      25.0ºC
  SN Cell Constant
1.00000 /cm
```

6.4.6 RTD Offset

The display screen for Entering the RTD Offset for the sensor is shown. The default value is displayed in **bold type**. Refer to the contacting conductivity Programming flow diagram to complete this function.

```
S1: 1.234µS/cm   25.0ºC
S2: 12.34pH      25.0ºC
   SN RTD Offset
 0.00°C
```

6.4.7 RTD Slope

The display screen for entering the RTD slope for the sensor is shown. The default value is displayed in **bold type**. Refer to the contacting conductivity Programming flow diagram to complete this function.

```
S1: 1.234µS/cm   25.0ºC
S2: 12.34pH      25.0ºC
   SN RTD Slope
 2.00%/ºC
```

6.4.8 Temp Comp

The display screen for Selecting Temperature Compensation as Slope, Neutral Salt, Cation or Raw is shown. The default value is displayed in **bold type**. Refer to the contacting conductivity Programming flow diagram to complete this function.

```
S1: 1.234µS/cm   25.0ºC
S2: 12.34pH      25.0ºC
  SN Temp Comp
 Slope
 Neutral Salt
 Cation
 Raw
```

6.4.9 Slope

The display screen for Entering the conductivity/temp Slope is shown. The default value is displayed in **bold type**. Refer to the contacting conductivity Programming flow diagram to complete this function.

```
S1: 1.234µS/cm   25.0ºC
S2: 12.34pH      25.0ºC
     SN Slope
2.00 %/ºC
```

6.4.10 Reference Temp

The display screen for manually entering the Reference temperature is shown. The default value is displayed in **bold type**. Refer to the contacting conductivity Programming flow diagram to complete this function.

```
S1: 1.234µS/cm   25.0ºC
S2: 12.34pH      25.0ºC
   SN Ref Temp
  (25.0ºC normal)
+25.0ºC
```

6.4.11 Filter

The display screen for entering the input filter value in seconds is shown. The default value is displayed in **bold type**. Refer to the contacting conductivity Programming flow diagram to complete this function.

```
S1: 1.234µS/cm   25.0ºC
S2: 12.34pH      25.0ºC
   SN Input filter

02 sec
```

6.4.12 Custom Setup

The display screens for creating a custom curve for converting conductivity to concentration is shown. Refer to the contacting conductivity Programming flow diagram to complete this function.

```
S1: 1.234µS/cm   25.0ºC
S2: 12.34pH      25.0ºC
 SN Custom Curve
Configure
Enter Data Points
Calculate Curve
```

When the custom curve data entry is complete, press ENTER. The display will confirm the determination of a custom curve fit to the entered data by displaying this screen:

```
S1: 1.234µS/cm   25.0ºC
S2: 12.34pH      25.0ºC
 SN Calculate Curve
Custom curve
fit completed.
In Process Cal
recommended.
```

If the custom curve fit is not completed or is unsuccessful, the display will read as follows and the screen will return to the beginning custom curve screen.

```
S1: 1.234µS/cm   25.0ºC
S2: 12.34pH      25.0ºC
 SN Calculate Curve
Failure
```

6.4.13 Cal Factor

Upon initial installation and power up, if **4-electrode** was selected for the sensor type in the **Quick Start** menus, the user enters a Cell Constant and a “Cal Factor” using the instrument keypad. The cell constant is needed to convert measured conductance to conductivity as displayed on the analyzer screen. The “Cal Factor” entry is needed increase the accuracy of the live conductivity readings, especially at low conductivity readings below 20uS/cm. Both the Cell Constant and the “Cal Factor” are printed on the tag attached to the 4-electrode sensor/cable.

The display screen for entering Cal Factor is shown. The default value is displayed in **bold type.** If necessary after initial installation and start-up, enter the “Cal Factor” as printed on the sensor tag.

```
S1: 1.234µS/cm   25.0ºC
S2: 12.34pH      25.0ºC
   SN Cal Factor
0.95000/cm
```

6.5 TOROIDAL CONDUCTIVITY MEASUREMENT PROGRAMMING

6.5.1 Description

The section describes how to configure the Model 1056 analyzer for conductivity measurements using inductive/toroidal sensors. The following programming and configuration functions are covered.

TABLE 6-4. Toroidal Conductivity Measurement Programming

Measure	Sec.	Menu function:	default	Description
Toroidal conductivity	6.5.2	Model:	228	Select sensor type
	6.5.3	Measure:	Conductivity	Select Conductivity, Resistivity, TDS, Salinity or % conc
	6.5.4	Range:	Auto	Select measurement Auto-range or specific range
	6.5.5	Cell K:	3.00000/cm	Enter the cell Constant for the sensor
	6.5.6	Temp Comp:	Slope	Select Temp Comp: Slope, Neutral Salt, or Raw
	6.5.7	Slope:	2.00%/°C	Enter the linear temperature coefficient
	6.5.8	Ref Temp:	25.0°C	Enter the Reference temp
	6.5.9	Filter:	2 sec	Override the default input filter, enter 0-999 seconds
	6.5.10	Custom	Setup	Enter 2-5 data points in ppm and µS/cm for custom curves

A detailed flow diagram for toroidal conductivity programming is provided at the end of Sec. 6 to guide you through all basic programming and configuration functions.

To configure the toroidal conductivity measurement board:

1. Press **MENU**
2. Scroll down to **Program**. Press ENTER.
3. Scroll down to **Measurement**. Press ENTER.
4. Select **Sensor 1** or **Sensor 2** corresponding to toroidal conductivity. Press ENTER.

The adjacent screen format will appear (factory defaults are shown). To program any displayed function, scroll to the desired item and press ENTER.

```
S1: 1.234µS/cm   25.0ºC
S2: 12.34pH      25.0ºC
     SN Configure
Model:          228
Measure:       Cond
Range:         Auto
-----------------------
Cell K:  3.00000/cm
RTD Offset:  0.00ºC
RTD Slope:        0
Temp Comp:  Slope
Slope:     2.00%/°C
Ref Temp:   25.0°C
Filter:         2 sec
Custom Setup
```

The following sub-sections provide you with the initial display screen that appears for each configuration function. Use the **flow diagram for toroidal conductivity programming** at the end of Sec. 6 and the Model 1056 live screen prompts for each function to complete configuration and programming.

6.5.2 Sensor Model

The display screen for selecting the sensor model is shown. The default value is displayed in **bold type**. Refer to the toroidal conductivity Programming flow diagram to complete this function.

```
S1: 1.234µS/cm   25.0ºC
S2: 12.34pH      25.0ºC
     SN Model
228
225
226
247
-----------------------
Other
```

6.5.3 Measure

The display screen for selecting the measurement is shown. The default value is displayed in **bold type**. Refer to the toroidal conductivity Programming flow diagram to complete this function.

```
S1: 1.234µS/cm    25.0ºC
S2: 12.34pH       25.0ºC
  SN Measurement
 Conductivity
 Resistivity
 TDS
 Salinity
 ----------------------
 NaOH (0-12%)
 HCl (0-15%)
 Low H2SO4
 High H2SO4
 NaCl (0-20%)
 Custom Curve
```

6.5.4 Range

The display screen for Selecting Auto-ranging or a specific range is shown. The default value is displayed in bold type. Note: Ranges are shown as conductance, not conductivity. Refer to the toroidal conductivity Programming flow diagram to complete this function.

```
S1: 1.234µS/cm    25.0ºC
S2: 12.34pH       25.0ºC
      SN Range
 Auto
 2000 mS
 50 mS
 2 mS
 ----------------------
 200µS
```

6.5.5 Cell Constant

The display screen for entering a cell Constant for the sensor is shown. The default value is displayed in **bold type.** Refer to the toroidal conductivity Programming flow diagram to complete this function.

```
S1: 1.234µS/cm    25.0ºC
S2: 12.34pH       25.0ºC
  SN Cell Constant
 3.00000 /cm
```

6.5.6 Temp Comp

The display screen for Selecting Temperature Compensation as Slope, Neutral Salt, or Raw is shown. The default value is displayed in **bold type**. Refer to the toroidal conductivity Programming flow diagram to complete this function.

```
S1: 1.234µS/cm    25.0ºC
S2: 12.34pH       25.0ºC
   SN Temp Comp
 Slope
 Neutral Salt
 Raw
```

6.5.7 Slope

The display screen for Entering the conductivity/temp Slope is shown. The default value is displayed in **bold type**. Refer to the toroidal conductivity Programming flow diagram to complete this function.

```
S1: 1.234µS/cm    25.0ºC
S2: 12.34pH       25.0ºC
      SN Slope
 2.00%/ºC
```

6.5.8 Ref Temp

The display screen for manually Entering the Reference temperature is shown. The default value is displayed in **bold type**. Refer to the toroidal conductivity Programming flow diagram to complete this function.

```
S1: 1.234µS/cm    25.0ºC
S2: 12.34pH       25.0ºC
      SN Ref Temp
    (25.0ºC normal)
 +25.0ºC
```

6.5.9 Filter

The display screen for entering the input filter value in seconds is shown. The default value is displayed in **bold type.** Refer to the toroidal conductivity Programming flow diagram to complete this function.

```
S1: 1.234µS/cm    25.0ºC
S2: 12.34pH       25.0ºC
      SN Input filter

 02 sec
```

6.5.10 Custom Setup

The display screens for creating custom curves for converting conductivity to concentration is shown. Refer to the toroidal conductivity Programming flow diagram to complete this function.

```
S1: 1.234µS/cm    25.0ºC
S2: 12.34pH       25.0ºC
   SN Custom Curve
 Configure
 Enter Data Points
 Calculate Curve
```

When the custom curve data entry is complete, press ENTER. The display will confirm the determination of a custom curve fit to the entered data by displaying this screen:

```
S1: 1.234µS/cm    25.0ºC
S2: 12.34pH       25.0ºC
  SN Calculate Curve
 Custom curve
 fit completed.
 In Process Cal
 recommended.
```

If the custom curve fit is not completed or is unsuccessful, the display will read as follows and the screen will return to the beginning custom curve screen.

```
S1: 1.234µS/cm    25.0ºC
S2: 12.34pH       25.0ºC
  SN Calculate Curve
 Failure
```

6.6 CHLORINE MEASUREMENT PROGRAMMING

With a Chlorine measurement board installed, Model 1056 can measure any of four variants of Chlorine:

- Free Chlorine
- Total Chlorine
- Monochloramine
- pH-independent Free Chlorine

The section describes how to configure the Model 1056 analyzer for Chlorine measurements.

6.6.1 FREE CHLORINE MEASUREMENT PROGRAMMING

6.6.1.1 Description

This Chlorine sub-section describes how to configure the Model 1056 analyzer for Free Chlorine measurement using amperometric chlorine sensors. The following programming and configuration functions are covered:

TABLE 6-5. Free Chlorine Measurement Programming

Measure	Sec.	Menu function:	default	Description
Free Chlorine	6.6.1.2	Measure:	Free Chlorine	Select Free Chlorine, pH Ind. Free Cl. Total Cl, Monochloramine
	6.6.1.3	Units:	ppm	Select units ppm or mg/L
	6.6.1.4	Filter:	5sec	Override the default input filter, enter 0-999 seconds
	6.6.1.5	Free Cl Correct:	Live	Select Live/Continuous pH correction or Manual
	6.6.1.6	Manual pH:	7.00 pH	For Manual pH correction, enter the pH value
	6.6.1.7	Resolution:	0.001	Select display resolution 0.01 or 0.001

A detailed flow diagram for programming of all chlorine measurements is provided at the end of Sec. 6 to guide you through all basic programming and configuration functions.

To configure the chlorine measurement board for free chlorine:

1. Press **MENU**
2. Scroll down to **Program**. Press ENTER.
3. Scroll down to **Measurement**. Press ENTER.
4. Select **Sensor 1** or **Sensor 2** corresponding to chlorine. Press ENTER.

The adjacent screen format will appear (factory defaults are shown). To program any displayed function, scroll to the desired item and press ENTER.

```
S1: 1.234µS/cm    25.0ºC
S2: 12.34pH       25.0ºC
      SN Configure
Measure: Free Chlorine
Units:                ppm
-----------------------------
Filter:               5sec
Free Cl Correct:      Live
Manual pH:         7.00 pH
Resolution:         0.001
```

The following sub-sections provide you with the initial display screen that appears for each configuration function. Use the f**low diagram for chlorine programming** at the end of Sec. 6 and the Model 1056 live screen prompts for each function to complete configuration and programming.

6.6.1.2 Measure

The display screen for selecting the measurement is shown. The default value is displayed in **bold type**. Refer to the Chlorine Programming flow diagram to complete this function.

```
S1: 1.234µS/cm    25.0ºC
S2: 12.34pH       25.0ºC
   SN Measurement
Free Chlorine
pH Independ. Free Cl
Total Chlorine
Monochloramine
```

6.6.1.3 Units

The display screen for selecting units as ppm or mg/L is shown. The default value is displayed in **bold type**. Refer to the Chlorine Programming flow diagram to complete this function.

```
S1: 1.234µS/cm    25.0ºC
S2: 12.34pH       25.0ºC
        SN Units
ppm
mg/L
```

6.6.1.4 Filter

The display screen for entering the input filter value in seconds is shown. The default value is displayed in **bold type**. Refer to the Chlorine Programming flow diagram to complete this function.

```
S1: 1.234µS/cm    25.0ºC
S2: 12.34pH       25.0ºC
      SN Input filter

05 sec
```

6.6.1.5 Free Chlorine pH Correction

The display screen for Selecting Live/Continuous pH correction or Manual pH correction is shown. The default value is displayed in **bold type**. Refer to the Chlorine Programming flow diagram to complete this function.

```
S1: 1.234µS/cm    25.0ºC
S2: 12.34pH       25.0ºC
       SN Free Cl
      pH Correction
Live/Continuous
Manual
```

6.6.1.6 Manual pH Correction

The display screen for manually entering the pH value of the measured process liquid is shown. The default value is displayed in **bold type**. Refer to the Chlorine Programming flow diagram to complete this function.

```
S1: 1.234µS/cm    25.0ºC
S2: 12.34pH       25.0ºC
     SN Manual pH
07.00 pH
```

6.6.1.7 Resolution

The display screen for selecting display resolution as 0.001 or 0.01 is shown. The default value is displayed in **bold type**. Refer to the Chlorine Programming flow diagram to complete this function.

```
S1: 1.234µS/cm    25.0ºC
S2: 12.34pH       25.0ºC
    SN Resolution -
0.001
0.01
```

6.6.2 TOTAL CHLORINE MEASUREMENT PROGRAMMING

6.6.2.1 Description

This Chlorine sub-section describes how to configure the Model 1056 analyzer for Total Chlorine measurement using amperometric chlorine sensors. The following programming and configuration functions are covered:

TABLE 6-6. Total Chlorine Measurement Programming

Measure	Sec.	Menu function:	default	Description
Total Chlorine	6.6.2.2	Measure:	Free Chlorine	Select Free Chlorine, pH Ind. Free Cl. Total Cl, Monochloramine
	6.6.2.3	Units:	ppm	Select units ppm or mg/L
	6.6.2.4	Filter:	5sec	Override the default input filter, enter 0-999 seconds
	6.6.2.5	Resolution:	0.001	Select 0.01 or 0.001 display resolution

A detailed flow diagram for programming of all chlorine measurements is provided at the end of Sec. 6 to guide you through all basic programming and configuration functions.

To configure the chlorine measurement board for total chlorine:

1. Press **MENU**
2. Scroll down to **Program**. Press ENTER.
3. Scroll down to **Measurement**. Press ENTER.
4. Select **Sensor 1** or **Sensor 2** corresponding to chlorine. Press ENTER.

The adjacent screen format will appear (factory defaults are shown). To program any displayed function, scroll to the desired item and press ENTER.

```
S1: 1.234µS/cm    25.0ºC
S2: 12.34pH       25.0ºC
      SN Configure
Measure: Free Chlorine
Units:              ppm
Filter:             5sec
Resolution:         0.001
```

The following sub-sections provide you with the initial display screen that appears for each configuration function. Use the flow diagram for chlorine programming at the end of Sec. 6 and the Model 1056 live screen prompts for each function to complete configuration and programming.

6.6.2.2 Measure

The display screen for selecting the measurement is shown. The default value is displayed in **bold type**. Refer to the chlorine Programming flow diagram to complete this function.

```
S1: 1.234µS/cm    25.0ºC
S2: 12.34pH       25.0ºC
   SN Measurement
Free Chlorine
pH Independ. Free Cl
Total Chlorine
Monochloramine
```

6.6.2.3 Units

The display screen for selecting units as ppm or mg/L is shown. The default value is displayed in **bold type**. Refer to the Chlorine Programming flow diagram to complete this function

```
S1: 1.234µS/cm    25.0ºC
S2: 12.34pH       25.0ºC
      SN Units
ppm
mg/L
```

6.6.2.4 Filter
The display screen for entering the input filter value in seconds is shown. The default value is displayed in **bold type**. Refer to the Chlorine Programming flow diagram to complete this function.

```
S1: 1.234µS/cm    25.0ºC
S2: 12.34pH       25.0ºC
     SN Input filter

 05 sec
```

6.6.2.5 Resolution
The display screen for selecting display resolution as 0.001 or 0.01 is shown. The default value is displayed in **bold type**. Refer to the Chlorine Programming flow diagram to complete this function.

```
S1: 1.234µS/cm    25.0ºC
S2: 12.34pH       25.0ºC
    SN Resolution
 0.001
 0.01
```

6.6.3 MONOCHLORAMINE MEASUREMENT PROGRAMMING

6.6.3.1 Description
This Chlorine sub-section describes how to configure the Model 1056 analyzer for Monochloramine measurement using amperometric chlorine sensors. The following programming and configuration functions are covered:

TABLE 6-7. Monochloramine Measurement Programming

Measure	Sec.	Menu function: default	Description
Monochloramine	6.6.3.2	Measure: Free Chlorine	Select Free Chlorine, pH Ind. Free Cl. Total Cl, Monochloramine
	6.6.3.3	Units: ppm	Select units ppm or mg/L
	6.6.3.4	Filter: 5sec	Override the default input filter, enter 0-999 seconds
	6.6.3.5	Resolution: 0.001	Select 0.01pH or 0.1ppm/mg/L for display Resolution

A detailed flow diagram for programming of all chlorine measurements is provided at the end of Sec. 6 to guide you through all basic programming and configuration functions.

To configure the chlorine measurement board for monochloramine:

1. Press **MENU**
2. Scroll down to **Program**. Press ENTER.
3. Scroll down to **Measurement**. Press ENTER.
4. Select **Sensor 1** or **Sensor 2** corresponding to chlorine. Press ENTER.

```
S1: 1.234µS/cm    25.0ºC
S2: 12.34pH       25.0ºC
     SN Configure
Measure: Free Chlorine
Units:              ppm
Filter:            5sec
Resolution:        0.001
```

The following screen format will appear (factory defaults are shown). To program any displayed function, scroll to the desired item and press ENTER.

The following sub-sections provide you with the initial display screen that appears for each configuration function. Use the **flow diagram for chlorine programming** at the end of Sec. 6 and the Model 1056 live screen prompts for each function to complete configuration and programming.

6.6.3.2-Measure: Monochloramine
The display screen for selecting the measurement is shown. The default value is displayed in **bold type**. Refer to the Chlorine Programming flow diagram to complete this function.

```
S1: 1.234µS/cm    25.0ºC
S2: 12.34pH       25.0ºC
    SN Measurement
 Free Chlorine
 pH Independ. Free Cl
 Total Chlorine
 Monochloramine
```

6.6.3.3 Units

The display screen for selecting units as ppm or mg/L is shown. The default value is displayed in **bold type**. Refer to the Chlorine Programming flow diagram to complete this function.

```
S1: 1.234µS/cm   25.0ºC
S2: 12.34pH      25.0ºC
      SN Units
ppm
mg/L
```

6.6.3.4 Filter

The display screen for entering the input filter value in seconds is shown. The default value is displayed in **bold type**. Refer to the Chlorine Programming flow diagram to complete this function.

```
S1: 1.234µS/cm   25.0ºC
S2: 12.34pH      25.0ºC
     SN Input filter

05 sec
```

6.6.3.5 Resolution

The display screen for selecting display resolution as 0.001 or 0.01 is shown. The default value is displayed in **bold type**. Refer to the Chlorine Programming flow diagram to complete this function.

```
S1: 1.234µS/cm   25.0ºC
S2: 12.34pH      25.0ºC
     SN Resolution
0.001
0.01
```

6.6.4 pH-INDEPENDENT FREE CHLORINE MEASUREMENT PROGRAMMING

6.6.4.1 Description

This Chlorine sub-section describes how to configure the Model 1056 analyzer for Free Chlorine measurements using the pH-independent free chlorine sensor, Model 498CL-01, manufactured by Rosemount Analytical. The following programming and configuration functions are covered:

TABLE 6-8. pH-independent Free Chlorine Measurement Programming

Measure	Sec.	Menu function: default	Description
pH-independent Free Chlorine	6.6.4.2	Measure: pH Indep Free Cl	Select Free Chlorine, pH Ind. Free Cl. Total Cl, Monochloramine
	6.6.4.3	Units: ppm	Select units ppm or mg/L
	6.6.4.4	Filter: 5sec	Override the default input filter, enter 0-999 seconds
	6.6.4.5	Resolution: 0.001	Select 0.01pH or 0.1ppm/mg/L for display Resolution

A detailed flow diagram for programming of all chlorine measurements is provided at the end of Sec. 6 to guide you through all basic programming and configuration functions.

To configure the chlorine measurement board for pH-independent free chlorine:

1. Press **MENU**
2. Scroll down to **Program**. Press ENTER.
3. Scroll down to **Measurement**. Press ENTER.
4. Select **Sensor 1** or **Sensor 2** corresponding to chlorine. Press ENTER.

The adjacent screen format will appear (factory defaults are shown). To program any displayed function, scroll to the desired item and press ENTER.

```
S1: 1.234µS/cm   25.0ºC
S2: 12.34pH      25.0ºC
     SN Configure
Measure: Free Chlorine
Units:              ppm
Filter:             5sec
Resolution:       0.001
```

The following sub-sections provide you with the initial display screen that appears for each configuration function. Use the **flow diagram for chlorine programming** at the end of Sec. 6 and the Model 1056 live screen prompts for each function to complete configuration and programming.

6.6.4.2 Measurement: pH-independent Free Chlorine
The display screen for selecting the measurement is shown. The default value is displayed in **bold type**. Refer to the chlorine Programming flow diagram to complete this function.

```
S1: 1.234µS/cm    25.0ºC
S2: 12.34pH       25.0ºC
    SN Measurement
 Free Chlorine
 pH Independ. Free Cl
 Total Chlorine
 Monochloramine
```

6.6.4.3 Units
The display screen for selecting units as ppm or mg/L is shown. The default value is displayed in **bold type**. Refer to the Chlorine Programming flow diagram to complete this function.

```
S1: 1.234µS/cm    25.0ºC
S2: 12.34pH       25.0ºC
        SN Units
 ppm
 mg/L
```

6.6.4.4 Filter
The display screen for entering the input filter value in seconds is shown. The default value is displayed in **bold type**. Refer to the Chlorine Programming flow diagram to complete this function.

```
S1: 1.234µS/cm    25.0ºC
S2: 12.34pH       25.0ºC
      SN Input filter

 05 sec
```

6.6.4.5 Resolution
The display screen for selecting display resolution as 0.001 or 0.01 is shown. The default value is displayed in **bold type**. Refer to the Chlorine Programming flow diagram to complete this function.

```
S1: 1.234µS/cm    25.0ºC
S2: 12.34pH       25.0ºC
      SN Resolution
 0.001
 0.01
```

6.7 OXYGEN MEASUREMENT PROGRAMMING

6.7.1 Description

This section describes how to configure the Model 1056 analyzer for dissolved and gaseous oxygen measurement using amperometric oxygen sensors. The following programming and configuration functions are covered:

TABLE 6-9. Oxygen Measurement Programming

Measure	Sec.	Menu function: default	Description
Oxygen	6.7.2	Type: Water/Waste	Select Water/Waste, Trace. BioRx, BioRx-Other, Brew, %O2 In Gas
	6.7.3	Units: ppm	Select ppm, mg/L, ppb, µg/L, % Sat, %O2-Gas, ppm Oxygen-Gas
	6.7.4	Partial Press: mmHg	Select mm Hg, in Hg. atm, kPa, mbar or bar for Partial pressure
	6.7.5	Salinity: 00.0‰	Enter Salinity as ‰
	6.7.6	Filter: 5sec	Override the default input filter, enter 0-999 seconds
	6.7.7	Pressure Units: bar	Select pressure units: mm Hg, in Hg,. Atm, kPa, mbar, bar
	6.7.8	Use Press: At Air Cal	Select atmospheric pressure source – internal or mA Input

A detailed flow diagram for oxygen programming is provided at the end of Sec. 6 to guide you through all basic programming and configuration functions.

To configure the Oxygen measurement board:

1. Press MENU
2. Scroll down to Program. Press ENTER.
3. Scroll down to Measurement. Press ENTER.
4. Select Sensor 1 or Sensor 2 corresponding to Oxygen. Press ENTER.

The adjacent screen format will appear (factory defaults are shown). To program any displayed function, scroll to the desired item and press ENTER.

```
S1: 1.234µS/cm    25.0ºC
S2: 12.34pH       25.0ºC
      SN Configure
Type:     Water/Waste
Units:            ppm
Partial Press:  mmHg
-----------------------------
Salinity:        00.0‰
Filter:           5sec
Pressure Units:   bar
Use Press: At Air Cal
Custom Setup
```

The following sub-sections show the initial display screen that appears for each configuration function. Use the **flow diagram for oxygen programming** at the end of Sec. 6 and the Model 1056 live screen prompts for each function to complete configuration and programming.

6.7.2 Oxygen Measurement application

The display screen for programming the measurement is shown. The default value is displayed in **bold type.** Refer to the Oxygen Programming flow diagram to complete this function.

```
S1: 1.234µS/cm    25.0ºC
S2: 12.34pH       25.0ºC
      SN Type
Water/Waste
Trace Oxygen
BioRx-Rosemount
BioRx-Other
-----------------------------
Brewing
Oxygen In Gas
```

6.7.3 Units

The display screen for selecting units as ppm , mg/L, ppb, µg/L, % Saturation, %Oxygen in Gas, or ppm Oxygen in Gas is shown. The default value is displayed in **bold type**. Refer to the Oxygen Programming flow diagram to complete this function.

```
S1: 1.234µS/cm    25.0ºC
S2: 12.34pH       25.0ºC
      SN Units
ppm
mg/L
ppb
µg/L
-----------------------------
% Saturation
Partial Pressure
% Oxygen In Gas
ppm Oxygen In Gas
```

6.7.4 Partial Press

The display screen for selecting pressure units for Partial pressure is shown. This selection is needed if the specified measurement is Partial pressure. The default value is displayed in **bold type**. Refer to the Oxygen Programming flow diagram to complete this function.

```
S1: 1.234µS/cm    25.0ºC
S2: 12.34pH       25.0ºC
  SN Partial Press
 mm Hg
 in Hg
 atm
 kPa
-----------------------
 mbar
 bar
```

6.7.5 Salinity

The display screen for Entering the Salinity (as parts per thousand) of the process liquid to be measured is shown. The default value is displayed in **bold type**. Refer to the Oxygen Programming flow diagram to complete this function.
Enter Salinity as ‰

```
S1: 1.234µS/cm    25.0ºC
S2: 12.34pH       25.0ºC
     SN Salinity
00.0 ‰
```

6.7.6 Filter

The display screen for entering the input filter value in seconds is shown. The default value is displayed in **bold type**. Refer to the Oxygen Programming flow diagram to complete this function.

```
S1: 1.234µS/cm    25.0ºC
S2: 12.34pH       25.0ºC
    SN Input filter

05 sec
```

6.7.7 Pressure Units

The display screen for selecting pressure units for atmospheric pressure is shown. This selection is needed for the display of atmospheric pressure measured by the onboard pressure transducer on the Oxygen measurement board. The default value is displayed in **bold type**. Refer to the Oxygen Programming flow diagram to complete this function.

```
S1: 1.234µS/cm    25.0ºC
S2: 12.34pH       25.0ºC
   Pressure Units
 mm Hg
 in Hg
 atm
 kPa
-----------------------
 mbar
 bar
```

6.7.8 Use Pressure

The display screen for selecting atmospheric pressure source. The default value is displayed in **bold type**. Refer to the Oxygen Programming flow diagram to complete this function.

```
S1: 1.234µS/cm    25.0ºC
S2: 12.34pH       25.0ºC
 SN Use Pressure?
At Air Cal
mA Input
```

6.8 OZONE MEASUREMENT PROGRAMMING

6.8.1 Description

This section describes how to configure the Model 1056 analyzer for ozone measurement using amperometric ozone sensors. The following programming and configuration functions are covered:

TABLE 6-10. Ozone Measurement Programming

Measure	Sec.	Menu function:	default	Description
Ozone	6.8.2	Units:	ppm	Select units ppm, mg/L, ppb, µg/L
	6.8.3	Filter:	5sec	Override the default input filter, enter 0-999 seconds
	6.8.4	Resolution:	0.001	Select 0.01or 0.001 for display resolution

A detailed flow diagram for ozone programming is provided at the end of Sec. 6 to guide you through all basic programming and configuration functions.

To configure the Ozone measurement board:

1. Press **MENU**
2. Scroll down to **Program**. Press ENTER.
3. Scroll down to **Measurement**. Press ENTER.
4. Select **Sensor 1** or **Sensor 2** corresponding to Ozone. Press ENTER.

```
S1: 1.234µS/cm   25.0ºC
S2: 12.34pH      25.0ºC
    SN Configure
Units:          ppm
Filter:        5 sec
Resolution:    0.001
```

The adjacent screen format will appear (factory defaults are shown). To program any displayed function, scroll to the desired item and press ENTER.

The following sub-sections show the initial display screen that appears for each configuration function. Use the **flow diagram for ozone programming** at the end of Sec. 6 and the Model 1056 live screen prompts for each function to complete configuration and programming.

Note: Ozone measurement boards are detected automatically by the analyzer. No measurement selection is necessary.

6.8.2 Units

The display screen for selecting measurement units is shown. The default value is displayed in **bold type.** Refer to the Ozone Programming flow diagram to complete this function.

```
S1: 1.234µS/cm   25.0ºC
S2: 12.34pH      25.0ºC
    SN Units
ppm
mg/L
ppb
µg/L
```

6.8.3 Filter

The display screen for entering the input filter value in seconds is shown. The default value is displayed in **bold type**. Refer to the Ozone Programming flow diagram to complete this function.

```
S1: 1.234µS/cm   25.0ºC
S2: 12.34pH      25.0ºC
    SN Input filter

05 sec
```

6.8.4 Resolution

The display screen for selecting display resolution as 0.001 or 0.01 is shown. The default value is displayed in **bold type**. Refer to the Ozone Programming flow diagram to complete this function.

```
S1: 1.234µS/cm   25.0ºC
S2: 12.34pH      25.0ºC
    SN Resolution
0.001
0.01
```

6.9 TURBIDITY MEASUREMENT PROGRAMMING

6.9.1 DESCRIPTION

This section describes how to configure the Model 1056 analyzer for Turbidity measurements. The following programming and configuration functions are covered.

TABLE 6-11 TURBIDITY MEASUREMENT PROGRAMMING

Measure	Sec.	Menu function:	default	Description
Turbidity	6.9.2	Measurement type:	Turbidity	Select Turbidity or TSS calculation (estimated TSS)
	6.9.3	Measurement units:	NTU	NTU, FTU, FNU
	6.9.4	Enter TSS* Data:		Enter TSS and NTU data to calculate TSS based on Turbidity
	6.9.5	Filter:	20 sec	Override the default input filter, enter 0-999 seconds
	6.9.6	Bubble Rejection:	On	Intelligent software algorithm to eliminate erroneous readings caused by bubble accumulation in the sample

*TSS: Total Suspended Solids

A detailed flow diagram for Turbidity programming is provided at the end of Sec. 6 to guide you through all basic programming and configuration functions.

To configure the Turbidity measurement board:

1. Press MENU
2. Scroll down to Program. Press ENTER.
3. Scroll down to Measurement. Press ENTER.
4. Select Sensor 1 or Sensor 2 corresponding to Turbidity. Press ENTER.

The following screen format will appear (factory defaults are shown).

```
S1: 1.234µS/cm    25.0ºC
S2: 12.34pH       25.0ºC
     SN Configure
Measure:      Turbidity
Units:        NTU
Enter TSS Data
Filter:       20sec
----------------------
Bubble Rejection:  On
```

To program Turbidity, scroll to the desired item and press ENTER.

The following sub-sections provide you with the initial display screen that appears for each programming routine. Use the flow diagram for Turbidity programming at the end of Sec. 6 and the live screen prompts to complete programming.

6.9.2 Measurement

The display screen for selecting the measurement is shown. The default measurement is displayed in bold type. Refer to the Turbidity Programming flow diagram to complete this function.

```
S1: 1.234µS/cm    25.0ºC
S2: 12.34pH       25.0ºC
   SN Measurement
 Turbidity
 Calculated TSS
```

6.9.3 Units

The display screen for selecting the measurement units is shown. The default value is displayed in bold type. Refer to the Turbidity Programming flow diagram to complete this function.

```
S1: 1.234µS/cm    25.0ºC
S2: 12.34pH       25.0ºC
        SN Units
 NTU
 FTU
 FNU
```

If TSS data (Total Suspended Solids) calculation is selected, the following screen will be displayed. Refer to the Turbidity programming flow diagram to complete this function.

```
S1: 1.234µS/cm    25.0ºC
S2: 12.34pH       25.0ºC
        SN Units
 ppm
 mg/L
 none
```

6.9.4 Enter TSS Data

The display screen for entering TSS Data is shown. The default values are displayed. Refer to the Turbidity Programming flow diagram to complete this function

```
S1: 1.234µS/cm    25.0ºC
S2: 12.34pH       25.0ºC
        SN TSS Data
 Pt1 TSS:      0.000ppm
 Pt1 Turbid:   0.000NTU
 Pt2 TSS:      100.0ppm
 Pt2 Turbid:   100.0NTU
----------------------
 Calculate
```

Note: Based on user-entered NTU data, calculating TSS as a straight line curve could cause TSS to go below zero. The following screen lets users know that TSS will become zero below a certain NTU value.

```
S1: 1.234µS/cm    25.0ºC
S2: 12.34pH       25.0ºC
        SN TSS Data
 Calculation Complete
 Calculated TSS = 0 below
 xxxx NTU
```

The following illustration shows the potential for calculated TSS to go below zero

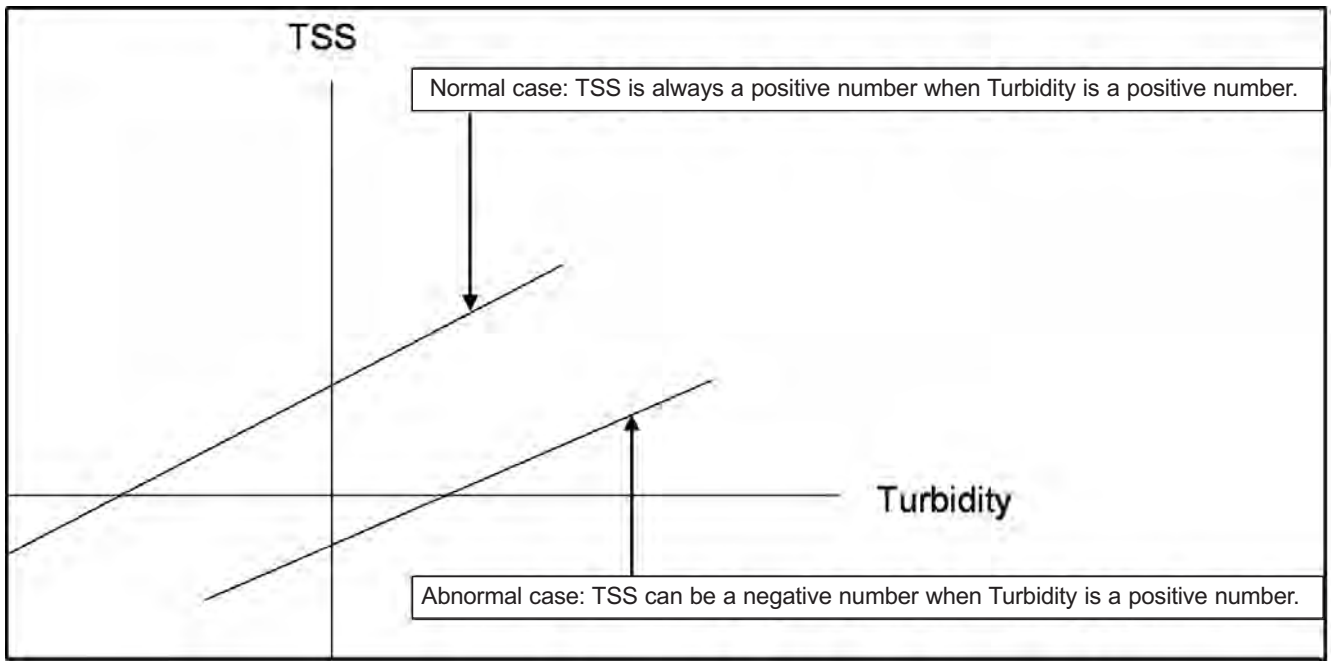

When the TSS data entry is complete, press ENTER. The display will confirm the determination of a TSS straight line curve fit to the entered NTU/turbidity data by displaying this screen:

```
S1: 1.234µS/cm    25.0ºC
S2: 12.34pH       25.0ºC
     SN TSS Data
Calculation
Complete
```

The following screen may appear if TSS calculation is unsuccessful. Re-entry of NTU and TSS data is required.

```
S1: 1.234µS/cm    25.0ºC
S2: 12.34pH       25.0ºC
     SN TSS Data
Data Entry Error

Press EXIT
```

6.9.5 Filter

The display screen for entering the input filter value in seconds is shown. The default value is displayed in bold type. Refer to the Turbidity Programming flow diagram to complete this function.

```
S1: 1.234µS/cm    25.0ºC
S2: 12.34pH       25.0ºC
     SN Input Filter
020sec
```

6.9.6 Bubble Rejection

Bubble rejection is an internal software algorithm that characterizes turbidity readings as bubbles as opposed to true turbidity of the sample. With Bubble rejection enabled, these erroneous readings are eliminated from the live measurements shown on the display and transmitted via the current outputs.

The display screen for selecting bubble rejection algorithm is shown. The default setting is displayed in bold type. Refer to the Turbidity Programming flow diagram to complete this function.

```
S1: 1.234µS/cm    25.0ºC
S2: 12.34pH       25.0ºC
 SN Bubble Rejection
On
Off
```

6.10 FLOW MEASUREMENT PROGRAMMING

6.10.1 DESCRIPTION

This section describes how to configure the Model 1056 analyzer for flow measurement when used with a compatible pulse flow sensor. The following programming and configuration functions are covered.

TABLE 6-12 FLOW MEASUREMENT PROGRAMMING

Measure	Sec.	Menu function:	default	Description
Flow	6.10.2	Measurement type	Pulse Flow	Select Pulse Flow or mA Current Input
	6.10.3	Measurement units:	GPH	Select GPM, GPH, cu ft/min, cu ft/hour, LPM, L/hour, m3/hr
	6.10.4	Enter TSS* Data:	0 Sec	Override the default input filter, enter 0-999 seconds

To configure the flow measurement board:

1. Press **MENU**
2. Scroll down to **Program**. Press ENTER.
3. Scroll down to **Measurement**. Press ENTER.
4. Select **Sensor 1** or **Sensor 2** corresponding to flow. Press ENTER.

```
S1: 1.234µS/cm   25.0ºC
S2: 12.34pH      25.0ºC
     SN Configure
Measure:  Pulse Flow
Units:            GPM
Filter:           5sec
```

The following screen format will appear (factory defaults are shown).

To program pulse flow, scroll to the desired item and press ENTER.

The following sub-sections provide you with the initial display screen that appears for each programming routine. Use the diagram for pulse flow programming at the end of Sec. 6 and the live screen prompts to complete programming.

6.10.2 Measurement

The display screen for selecting the measurement is shown. The default measurement is displayed in bold type. Refer to the pulse flow Programming diagram to complete this function.

```
S1: 1.234µS/cm   25.0ºC
S2: 12.34pH      25.0ºC
   SN Measurement
Pulse Flow
mA Input
```

6.10.3 Units

The display screen for selecting measurement units is shown. The default units are displayed in bold type. Refer to the pulse flow Programming diagram to complete this function.

```
S1: 1.234µS/cm   25.0ºC
S2: 12.34pH      25.0ºC
       SN Units
GPM
GPH
cu ft/min
cu ft/hour
-----------------------
L/min
L/hour
m3/hour
```

6.10.4 Filter

The display screen for entering the input filter value in seconds is shown. The default value is displayed in bold type. Refer to the pulse flow Programming diagram to complete this function.

```
S1: 1.234µS/cm   25.0ºC
S2: 12.34pH      25.0ºC
     SN Input Filter
005sec
```

6.11 CURRENT INPUT PROGRAMMING

6.11.1 DESCRIPTION

This section describes how to configure the Model 1056 analyzer for current input measurement when wired to an external device that transmits 4-20mA or 0-20mA analog current output. The following programming and configuration functions are covered.

TABLE 6-13 CURRENT INPUT PROGRAMMING

Measure	Sec.	Menu function:	default	Description
Current Input	6.11.2	Measurement type	mA input	Override the default (Flow) and select mA current input
	6.11.3	mA Input	Temperature	Select Temperature, Pressure, Flow or Other
	6.11.4	Measurement units:	ºC	Select measurement units based on selected input device type
	6.11.5	Input Range:	4-20mA	Select 4-20mA or 0-20mA
	6.11.6	Low Value:	0.000ºC	Enter the low measurement value to assign to 4mA
	6.11.7	High Value:	100.0ºC	Enter the high measurement value to assign to 20mA
	6.11.8	Filter:	05 sec	Override the default input filter, enter 0-999 seconds

A detailed flow diagram for current input programming is provided at the end of Sec. 6 to guide you through all basic programming and configuration functions.

To configure the current input measurement board:

1. Press **MENU**
2. Scroll down to **Program.** Press ENTER.
3. Scroll down to **Measurement.** Press ENTER.
4. Select **Sensor 1** or **Sensor 2** corresponding to current input. Press ENTER.

Note that factory default is Pulse Flow not mA Input. The user must override the factory default and select mA Input to enable the current input functionality. Upon selecting mA Input, the following menu screen will appear to allow complete programming of mA Current Input.

```
S1: 1.234µS/cm    25.0ºC
S2: 12.34pH       25.0ºC
      SN Configure
Measure:        mA Input
mA Input:    Temperature
Units:                ºC
Input Range:     4-20mA
--------------------------
Low Value:       0.001%
High Value :     100.0%
Filter:             5sec
```

To program current input, scroll to the desired item and press ENTER.

The following sub-sections provide you with the initial display screen that appears for each programming routine. Use the flow diagram for current input programming at the end of Sec. 6 and the live screen prompts to complete programming.

6.11.2 Measurement

The display screen for selecting the signal board functionality is shown. The default value is displayed in bold type. Scroll down to select mA Input to enable the current input functionality. Refer to the current input Programming flow diagram to complete this function.

```
S1: 1.234µS/cm    25.0ºC
S2: 12.34pH       25.0ºC
   SN Measurement
Pulse Flow
mA Input
```

6.11.3 mA Input

The display screen for selecting the type of measurement is shown. The default measurement type for mA Input is displayed in bold type. Refer to the current input Programming flow diagram to complete this function.

```
S1: 1.234µS/cm    25.0ºC
S2: 12.34pH       25.0ºC
      SN mA Input
Temperature
Pressure
Flow
Other
```

6.11.4 Units

The display screen for selecting measurement units is shown. The default value for temperature is displayed in bold type. Refer to the current input Programming flow diagram to complete this function.

```
S1: 1.234µS/cm    25.0ºC
S2: 12.34pH       25.0ºC
      SN Units
°C
ºF
```

If Pressure is selected as the measurement type for mA Input, the following display screen is shown:

```
S1: 1.234µS/cm    25.0ºC
S2: 12.34pH       25.0ºC
      SN Units
mm Hg
in Hg
atm
kPa
-----------------------
mbar
bar
```

The current input board can also be used to accept a 4-20mA current input from a pulse flow sensor. **If Flow is selected** as the measurement type for the 4-20mA current input board, the following display screen is shown:

```
S1: 1.234µS/cm    25.0ºC
S2: 12.34pH       25.0ºC
      SN Units
GPM
GPH
cu ft/min
cu ft/hour
-----------------------
L/min
L/hour
m3/hour
```

Current input can serve as a universal measurement board. 4-20mA current input can be accepted from any device and assigned to represent a wide range of measurements. **If Other is selected** as the measurement type for the 4-20mA current input board, the following display screen is shown:

```
S1: 1.234µS/cm    25.0ºC
S2: 12.34pH       25.0ºC
      SN Units
%
% Saturation
pH
mV
```

Any of the following units can also be selected to represent the 4-20mA current input. Simply scroll down to identify and select the desired measurement units as listed in the table below.

µS/cm	ppm	µg/L	NTU	ft/sec
mS/cm	ppb	mg/L	FTU	m/sec
MΩ-cm		g/L	FNU	
kΩ-cm		‰		none

6.11.5 Input Range

The display screen for selecting the Input Range is shown. The default value for mA Input is displayed in **bold type**. Refer to the current input Programming flow diagram to complete this function.

```
S1: 1.234µS/cm    25.0ºC
S2: 12.34pH       25.0ºC
    SN Input Range
4-20mA
0-20mA
```

6.11.6 Low Value

The display screen for entering the Low Value to be assigned to 4mA (or 0mA) current input is shown. The default value for temperature is displayed in **bold type.** Refer to the current input Programming flow diagram to complete this function.

```
S1: 1.234µS/cm    25.0ºC
S2: 12.34pH       25.0ºC
    SN Low Value
0.000ºC
```

6.11.7 High Value

The display screen for entering the High Value to be assigned to 20mA current input is shown. The default value for temperature is displayed in **bold type.** Refer to the current input Programming flow diagram to complete this function.

```
S1: 1.234µS/cm    25.0ºC
S2: 12.34pH       25.0ºC
    SN High Value
100.0ºC
```

6.11.8 Filter

The display screen for entering the input filter value in seconds is shown. The default value is displayed in **bold type.** Refer to the current input Programming diagram to complete this function. .

```
S1: 1.234µS/cm    25.0ºC
S2: 12.34pH       25.0ºC
    SN Input Filter
005sec
```

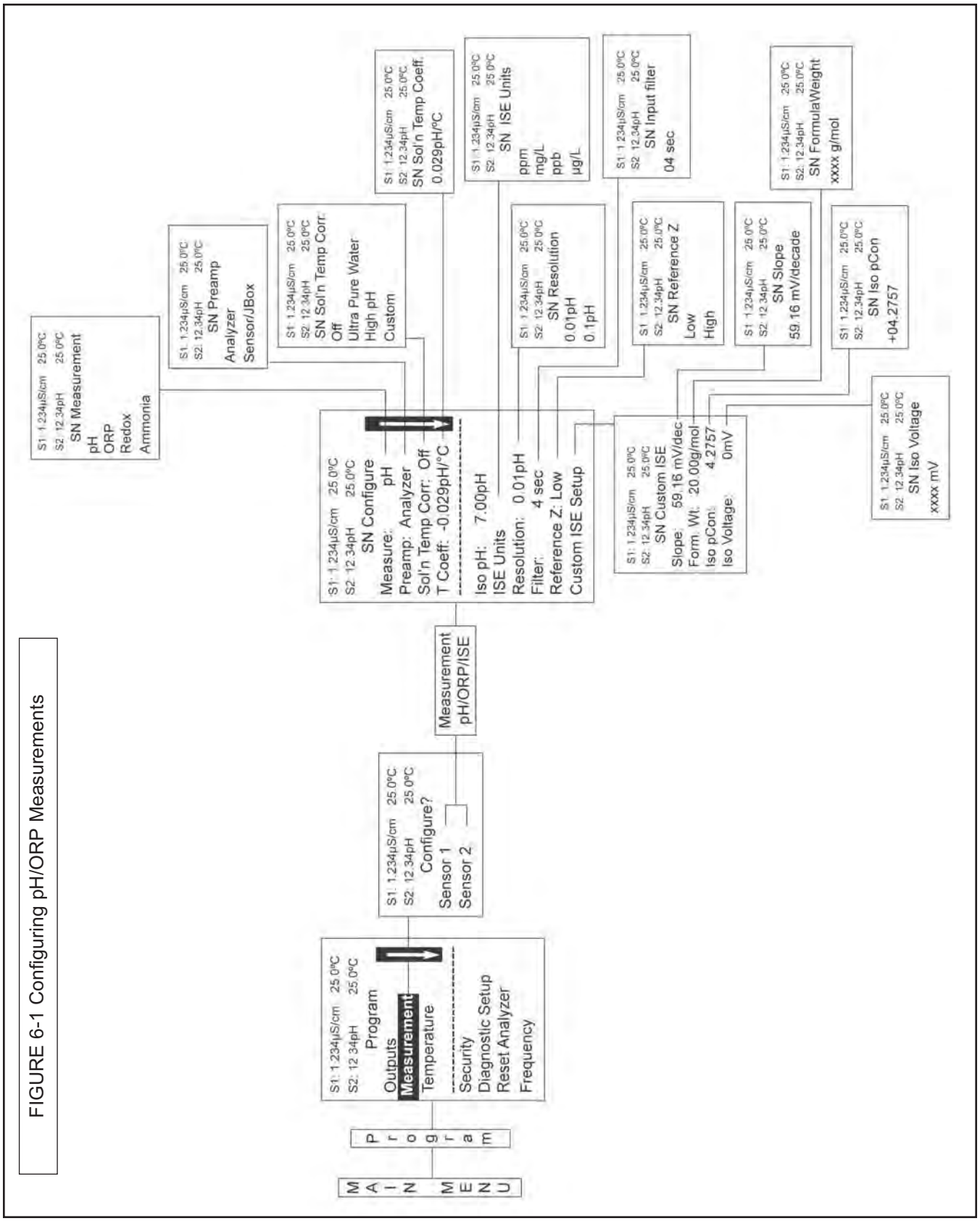

FIGURE 6-1 Configuring pH/ORP Measurements

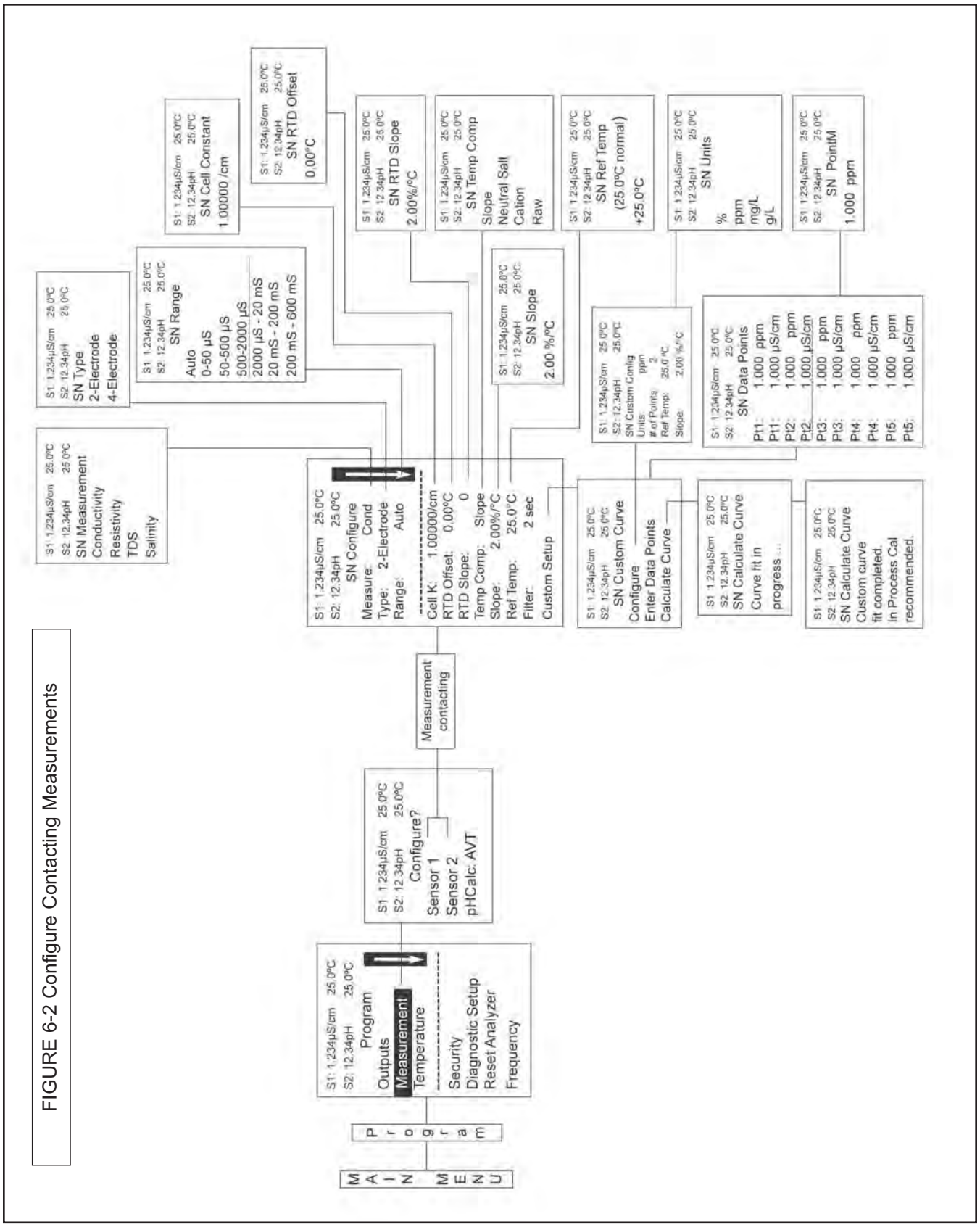

FIGURE 6-2 Configure Contacting Measurements

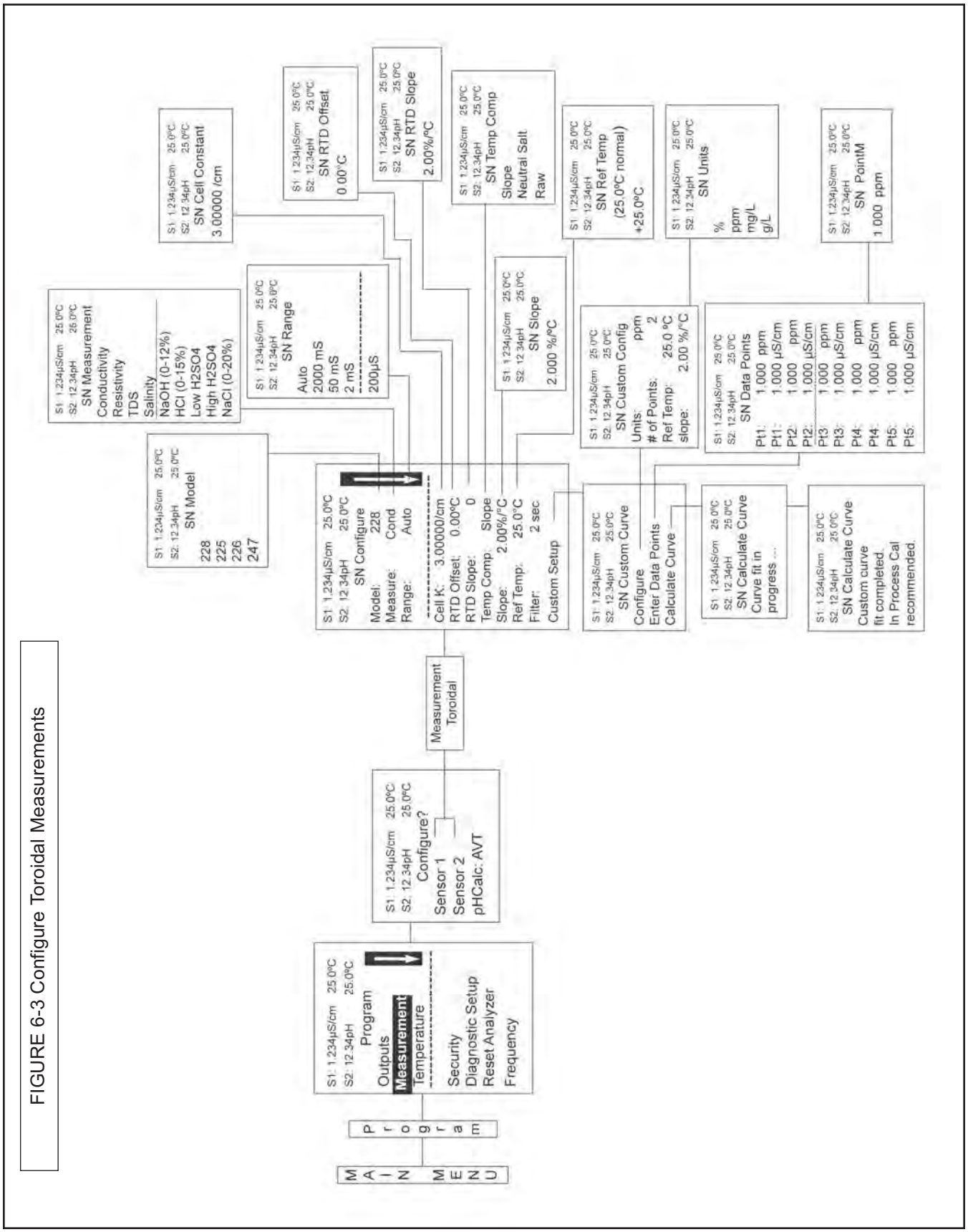

FIGURE 6-3 Configure Toroidal Measurements

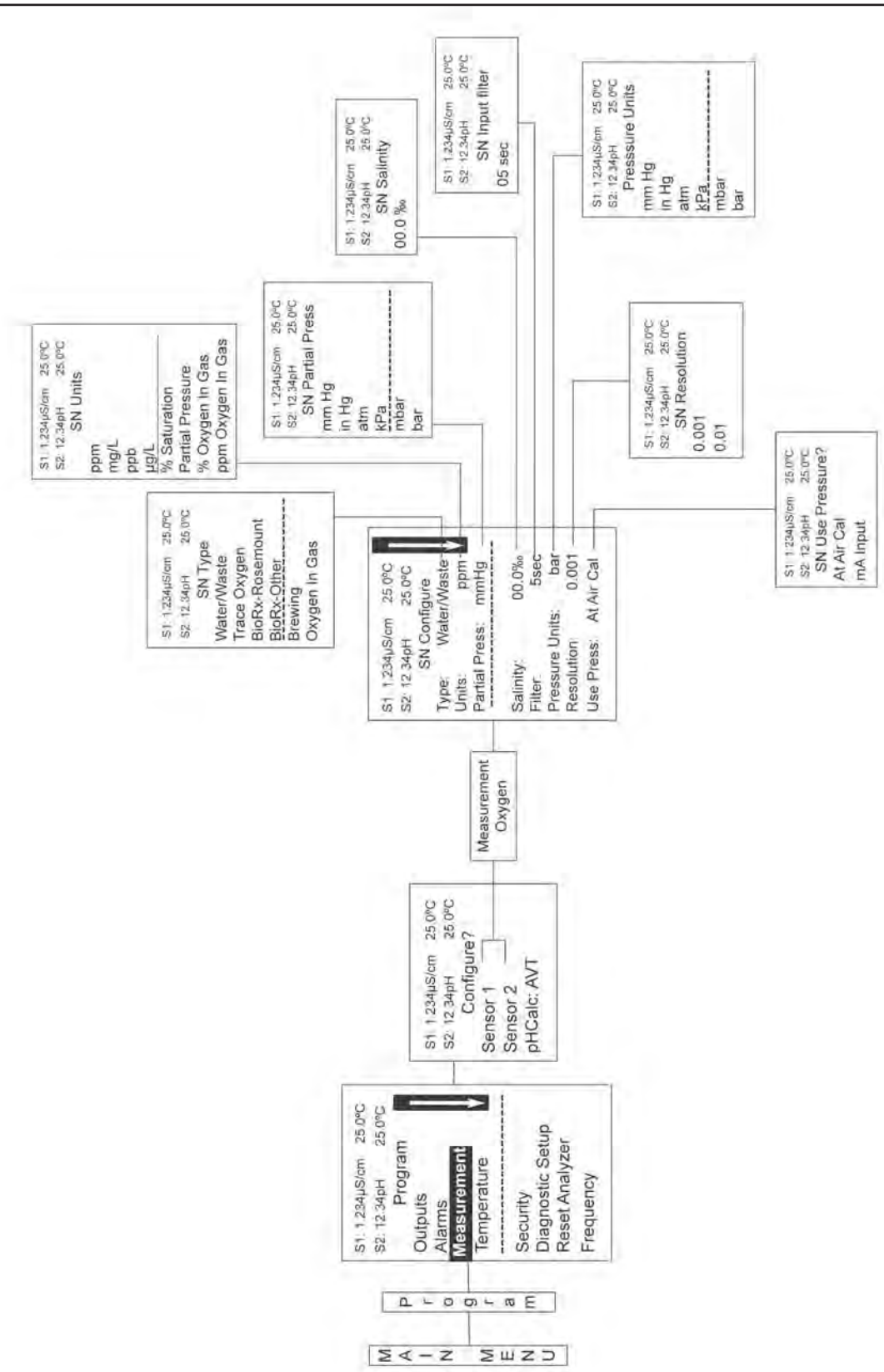

FIGURE 6-5 Configure Oxygen Measurements

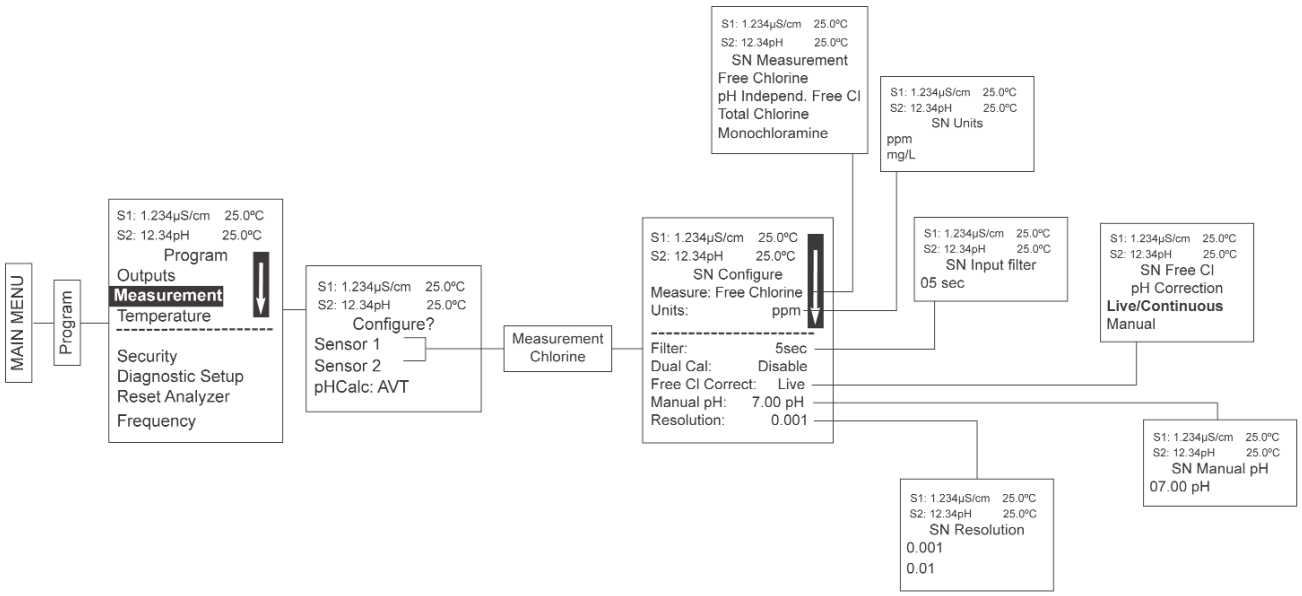

FIGURE 6-4 Configure Chlorine Measurements

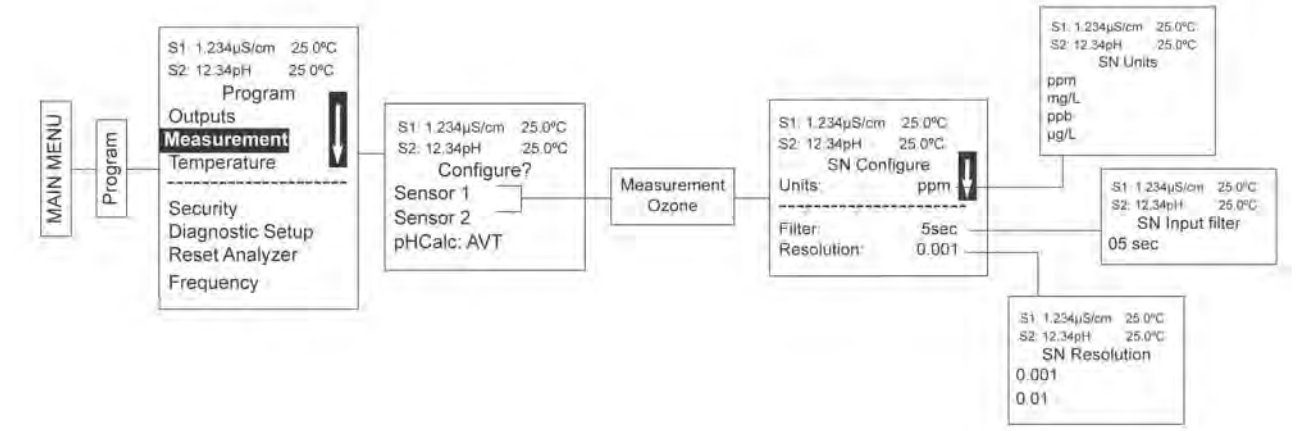

FIGURE 6-6 Configure Ozone Measurements

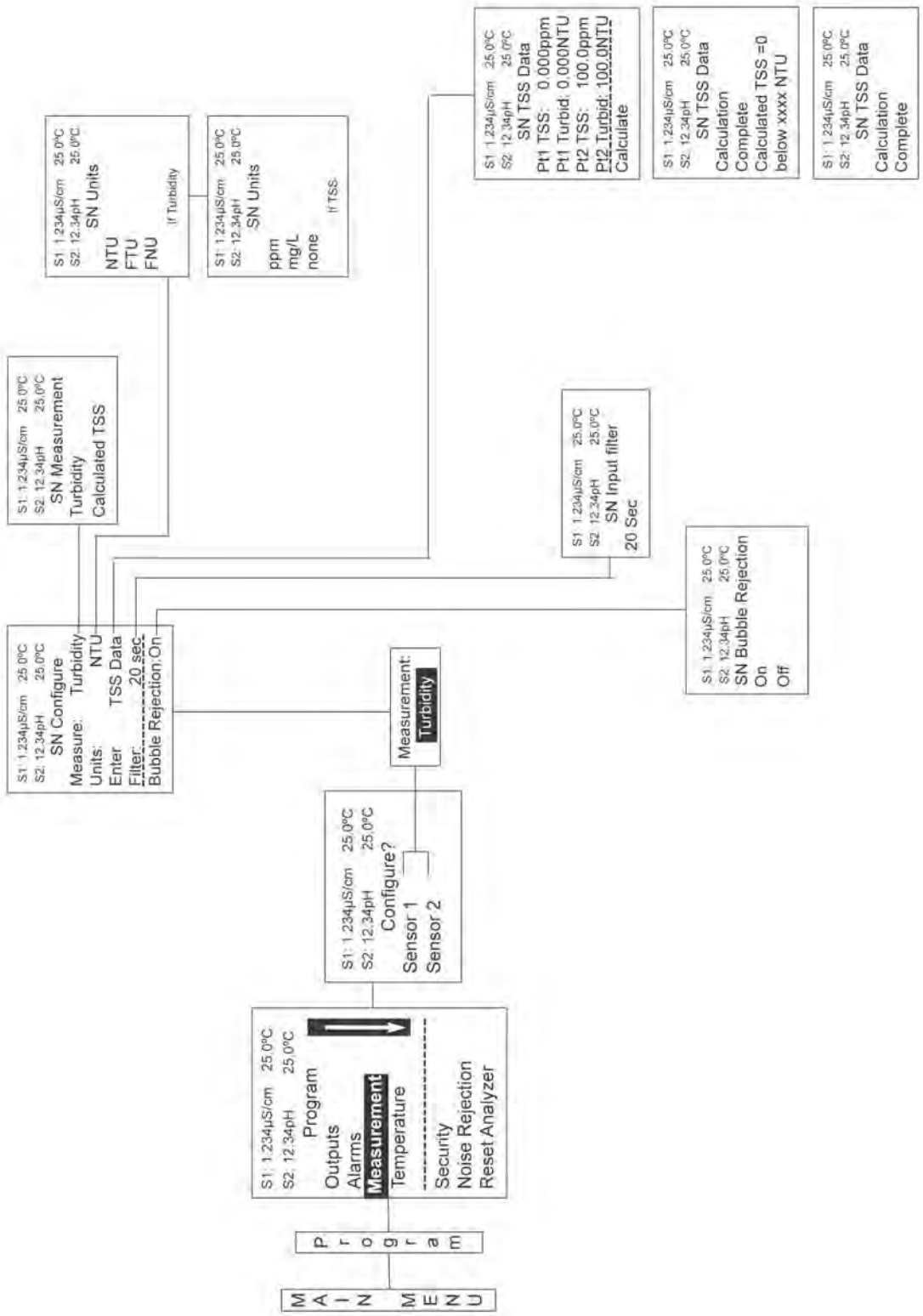

FIGURE 6-7 Configure Turbidity Measurement

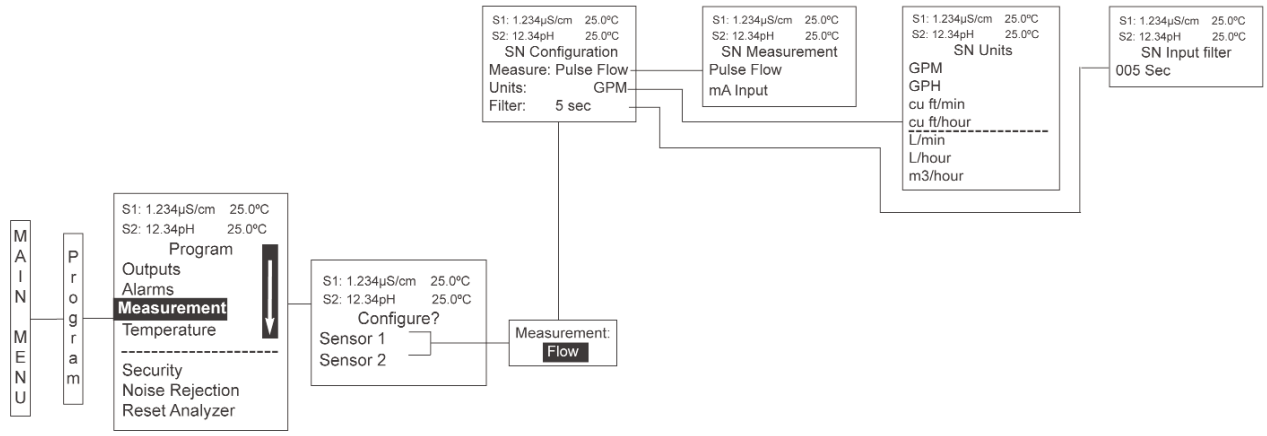

FIGURE 6-8 Configure Flow Measurement

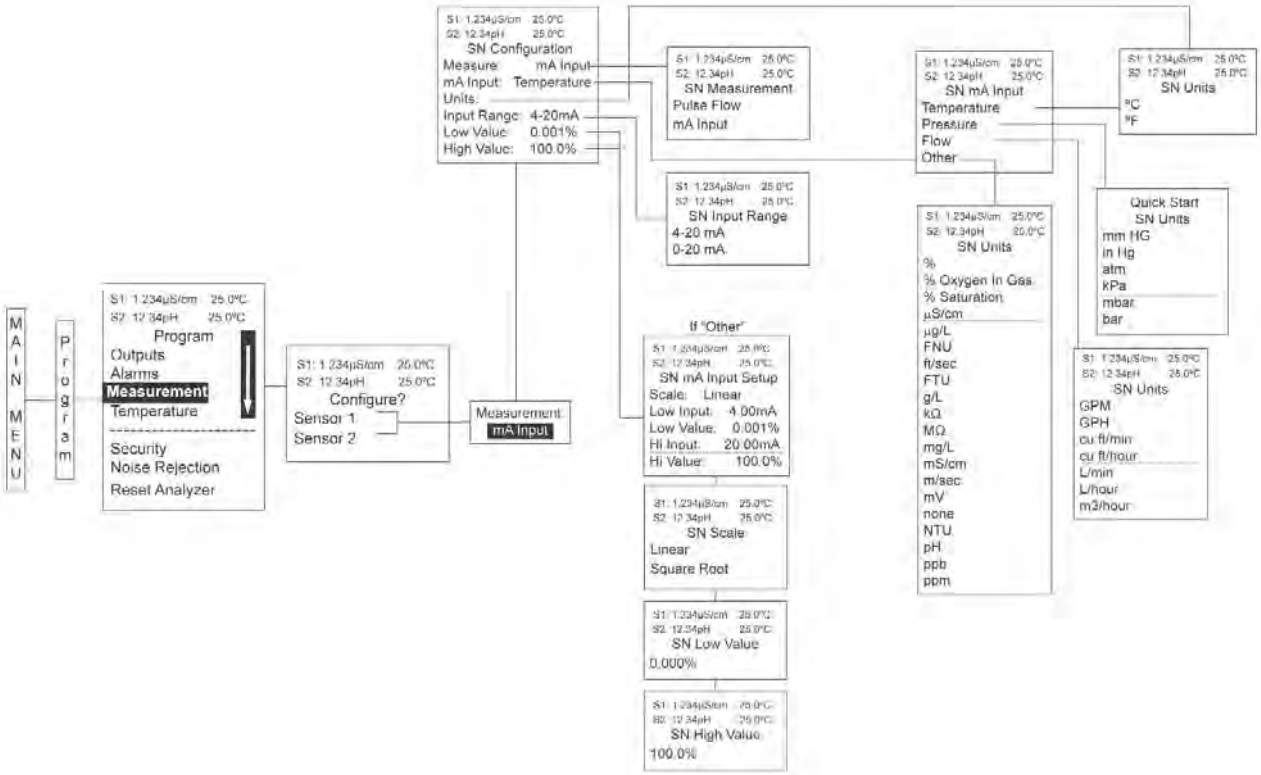

FIGURE 6-9 Configure mA Current Input Measurement

This page left blank intentionally

SECTION 7.0
CALIBRATION

7.1 CALIBRATION – INTRODUCTION
7.2 pH CALIBRATION
7.3 ORP CALIBRATION
7.4 CONTACTING CONDUCTIVITY CALIBRATION
7.5 TOROIDAL CONDUCTIVITY CALIBRATION
7.6 CHLORINE CALIBRATION
7.6.1 FREE CHLORINE
7.6.2 TOTAL CHLORINE
7.6.3 MONOCHLORAMINE
7.6.4 pH-INDEPENDENT FREE CHLORINE
7.7 OXYGEN CALIBRATION
7.8 OZONE CALIBRATION
7.9 TEMPERATURE CALIBRATION
7.10 TURBIDITY CALIBRATION
7.11 FLOW CALIBRATION

7.1 CALIBRATION – INTRODUCTION

Calibration is the process of adjusting or standardizing the analyzer to a lab test or a calibrated laboratory instrument, or standardizing to some known reference (such as a commercial buffer).

The auto-recognition feature of the analyzer will enable the appropriate calibration screens to allow calibration for any single sensor configuration or dual sensor configuration of the analyzer. Completion of Quick Start upon first power up enables live measurements but does not ensure accurate readings in the lab or in process. Calibration should be performed with each attached sensor to ensure accurate, repeatable readings.

This section covers the following programming and configuration functions:

1. Auto buffer cal for pH (pH Cal - Sec.7.2)
2. Manual buffer cal for pH (pH Cal - Sec.7.2)
3. Set calibration stabilization criteria for pH (pH Cal - Sec.7.2)
4. Standardization calibration (1-point) for pH, ORP and Redox (pH Cal - Sec.7.2 and 7.3)
5. Entering the cell constant of a conductivity sensor (Conductivity Cal - Sec. 7.4 and 7.5)
6. Calibrating the sensor in a conductivity standard Conductivity Cal - Sec. 7.4 and 7.5)
7. Calibrating the analyzer to a laboratory instrument (Contacting Conductivity Cal - Sec.7.4)
8. Zeroing an chlorine, oxygen or ozone sensor (Amperometric Cal - Sec's 7.6, 7.7, 7.8)
9. Calibrating an oxygen sensor in air (Oxygen Cal - Sec's 7.6)
10. Calibrating the sensor to a sample of known concentration (Amperometric Cal - Sec's 7.6, 7.7, 7.8)
11. Enter a manual reference temperature for temperature compensation of the process measurement

7.2 pH CALIBRATION

7.2.1 DESCRIPTION

New sensors must be calibrated before use. Regular recalibration is also necessary. Use auto calibration instead of manual calibration. Auto calibration avoids common pitfalls and reduces errors. The analyzer recognizes the buffers and uses temperature-corrected pH values in the calibration. Once the Model 1056 successfully completes the calibration, it calculates and displays the calibration slope and offset. The slope is reported as the slope at 25°C.

THIS SECTION DESCRIBES HOW TO CALIBRATE THE MODEL 1056 WITH A pH SENSOR. THE FOLLOWING CALIBRATION ROUTINES ARE COVERED.

TABLE 7-1 pH Calibration Routines

Measure	Sec.	Menu function:	default	Description
pH	7.2.2	Auto Calibration -	pH	2 point buffer calibration with auto buffer recognition
	7.2.3	Manual Calibration -	pH	2 point buffer calibration with manual buffer value entry
	7.2.4	Entering A Known Slope Value -	pH	Slope calibration with manual entry of known slope value
	7.2.5	Standardization -	pH	1 point buffer calibration with manual buffer value entry

A detailed flow diagram is provided at the end of Sec. 7 to guide you through the calibration routines.

To calibrate pH:

1. Press the **MENU** button
2. Select Calibrate. Press **ENTER**.
3. Select **Sensor 1** or **Sensor 2** corresponding to pH. Press ENTER.
4. Select **pH**. Press ENTER.

The following screen will appear. To calibrate pH or Temperature scroll to the desired item and press ENTER.

```
S1: 1.234µS/cm   25.0ºC
S2: 12.34pH      25.0ºC
   SN Calibrate?
pH
Temperature
```

The following sub-sections show the initial display screen that appears for each calibration routine. Use the **flow diagram for pH calibration** at the end of Sec. 7 and the live screen prompts to complete calibration.

7.2.2 AUTO CALIBRATION — pH

This screen appears after selecting **pH calibration**.

```
S1: 1.234µS/cm   25.0ºC
S2: 12.34pH      25.0ºC
      SN pH Cal
Buffer Cal
Standardize
Slope:      59.16mV/pH
Offset:          600 mV
```

Note that pH auto calibration criteria can be changed. The following criteria can be adjusted:

- Stabilization time (default 10 sec.)
- Stabilization pH value (default 0.02 pH)
- Type of Buffer used for AUTO CALIBRATION (default is Standard, non-commercial buffers).

The following commercial buffer tables are recognized by the analyzer:

- Standard (NIST plus pH7)
- DIN 19267
- Ingold
- Merck

The following screen will appear to allow adjustment of these criteria:

```
S1: 1.234µS/cm   25.0ºC
S2: 12.34pH      25.0ºC
      SN Setup
Stable Time:     10 sec
Stable Delta:   0.02 pH
Buffer:         Standard
```

The following screen will appear if the auto cal is successful. The screen will return to the pH Buffer Cal Menu.

```
S1: 1.234µS/cm   25.0ºC
S2: 12.34pH      25.0ºC
     SN pH Auto Cal
Slope:  59.16 mV/pH
Offset:          60 mV
```

<u>The following screens may appear if the auto cal is unsuccessful.</u>

1. A High Slope Error will generate this screen display:

```
S1: 1.234µS/cm   25.0ºC
S2: 12.34pH      25.0ºC
     SN pH Auto Cal
High Slope Error
Calculated: 62.11 mV/pH
Max: 62.00 mV/pH
Press EXIT
```

2. A Low Slope Error will generate this screen display:

```
S1: 1.234µS/cm   25.0ºC
S2: 12.34pH      25.0ºC
      SN pH Auto Cal
Low Slope Error
Calculated: 39.11mV/pH
Min: 40.00 mV/pH
Press EXIT
```

3. An Offset Error will generate this screen display:

```
S1: 1.234µS/cm   25.0ºC
S2: 12.34pH      25.0ºC
     SN pH Auto Cal
Offset Error
Calculated:    61.22mV
Max:           60.00mV
Press EXIT
```

7.2.3 MANUAL CALIBRATION — pH

New sensors must be calibrated before use. Regular recalibration is also necessary. Use manual calibration if non-standard buffers are being used; otherwise, use auto calibration. Auto calibration avoids common pitfalls and reduces errors.

The adjacent appears after selecting Manual pH calibration.

```
S1: 1.234µS/cm   25.0ºC
S2: 12.34pH      25.0ºC
   SN pH Manual Cal
Buffer 1
Buffer 2
```

7.2.4 ENTERING A KNOWN SLOPE VALUE — pH

If the electrode slope is known from other measurements, it can be entered directly in the Model 1056 analyzer. The slope must be entered as the slope at 25°C.

```
S1: 1.234µS/cm   25.0ºC
S2: 12.34pH      25.0ºC
  SN pH Slope@25ºC
59.16 mV/pH
```

7.2.5 STANDARDIZATION — pH

The pH measured by the Model 1056 analyzer can be changed to match the reading from a second or referee instrument. The process of making the two readings agree is called standardization. During standardization, the difference between the two pH values is converted to the equivalent voltage. The voltage, called the reference offset, is added to all subsequent measured cell voltages before they are converted to pH. If a standardized sensor is placed in a buffer solution, the measured pH will differ from the buffer pH by an amount equivalent to the standardization offset.

```
S1: 1.234µS/cm   25.0ºC
S2: 12.34pH      25.0ºC
     SN Enter Value
07.00pH
```

The following screen may appear if ORP Cal is unsuccessful. An Offset Error will generate this screen display:

```
S1: 1.234µS/cm   25.0ºC
S2: 12.34pH      25.0ºC
   SN Standardize
Offset Error
Calculated:   96mV
Max:          60mV
Press EXIT
```

If the ORP Cal is successful, the screen will return to the Cal sub-menu.

7.3 ORP CALIBRATION

7.3.1 DESCRIPTION

For process control, it is often important to make the measured ORP agree with the ORP of a standard solution. During calibration, the measured ORP is made equal to the ORP of a standard solution at a single point.

THIS SECTION DESCRIBES HOW TO CALIBRATE THE MODEL 1056 WITH AN ORP SENSOR. THE FOLLOWING CALIBRATION ROUTINE IS COVERED.

TABLE 7-2 ORP Calibration Routine

Measure	Sec.	Menu function: default	Description
ORP	7.3.2	Standardization — ORP	1 point buffer calibration with manual buffer value entry

A detailed flow diagram is provided at the end of Sec. 7 to guide you through the calibration routines.

To calibrate ORP:

1. Press the MENU button
2. Select Calibrate. Press ENTER.
3. Select Sensor 1 or Sensor 2 corresponding to ORP. Press ENTER.
4. Select ORP. Press ENTER.

The following screen will appear. To calibrate ORP or Temperature, scroll to the desired item and press ENTER.

```
S1: 1.234µS/cm   25.0ºC
S2: 12.34pH      25.0ºC
   SN Calibrate?
ORP
Temperature
```

The following sub-sections show the initial display screen that appears for each calibration routine. Use the **flow diagram for ORP calibration** at the end of Sec. 7 and the live screen prompts to complete calibration.

7.3.2 STANDARDIZATION — ORP

For process control, it is often important to make the measured ORP agree with the ORP of a standard solution. During calibration, the measured ORP is made equal to the ORP of a standard solution at a single point. This screen appears after selecting ORP calibration:

```
S1: 1.234µS/cm   25.0ºC
S2: 12.34pH      25.0ºC
   SN Enter Value
+0600 mV
```

If the ORP Cal is successful, the screen will return to the Cal sub-menu.

The following screen may appear if ORP Cal is unsuccessful.

```
S1: 1.234µS/cm   25.0ºC
S2: 12.34pH      25.0ºC
   SN Standardize
Offset Error
Calculated:  61.22mV
Max:         60.00mV
Press EXIT
```

7.4 CONTACTING CONDUCTIVITY CALIBRATION

7.4.1 DESCRIPTION

PLACING A NEW CONDUCTIVITY SENSOR IN SERVICE
New conductivity sensors rarely need calibration. The cell constant printed on the label is sufficiently accurate for most applications.
CALIBRATING AN IN-SERVICE CONDUCTIVITY SENSOR
1. After a conductivity sensor has been in service for a period of time, recalibration may be necessary. There are three ways to calibrate a sensor.

a. Use a standard instrument and sensor to measure the conductivity of the process stream. It is not necessary to remove the sensor from the process piping. The temperature correction used by the standard instrument may not exactly match the temperature correction used by the Model 1056. To avoid errors, turn off temperature correction in both the analyzer and the standard instrument.

b. Place the sensor in a solution of known conductivity and make the analyzer reading match the conductivity of the standard solution. Use this method if the sensor can be easily removed from the process piping and a standard is available. Be careful using standard solutions having conductivity less than 100 µS/cm. Low conductivity standards are highly susceptible to atmospheric contamination. Avoid calibrating sensors with 0.01/cm cell constants against conductivity standards having conductivity greater than 100 µS/cm. The resistance of these solutions may be too low for an accurate measurement. Calibrate sensors with 0.01/cm cell constant using method c.

c. To calibrate a 0.01/cm sensor, check it against a standard instrument and 0.01/cm sensor while both sensors are measuring water having a conductivity between 5 and 10 µS/cm. To avoid drift caused by absorption of atmospheric carbon dioxide, saturate the sample with air before making the measurements.
To ensure adequate flow past the sensor during calibration, take the sample downstream from the sensor. For best results, use a flow-through standard cell. If the process temperature is much different from ambient, keep connecting lines short and insulate the flow cell.

THIS SECTION DESCRIBES HOW TO CALIBRATE THE MODEL 1056 WITH AN ATTACHED CONTACTING CONDUCTIVITY SENSOR. THE FOLLOWING CALIBRATION ROUTINES ARE COVERED.

TABLE 7-3 Contacting Conductivity Calibration Routines

Measure	Sec.	Menu function:	default	Description
Contacting Conductivity	7.4.2	Cell K:	1.00000/cm	Enter the cell Constant for the sensor
	7.4.3	Zero Cal		Zero the analyzer with the sensor attached
	7.4.4	In Process Cal		Standardize the sensor to a known conductivity
	7.4.5	Meter Cal		Calibrate the analyzer to a lab conductivity instrument
	7.4.6	Cal Factor:	0.95000/cm	Enter the Cal Factor for 4-Electrode sensors from the sensor tag

A detailed flow diagram is provided at the end of Sec. 7 to guide you through the calibration routines
To calibrate contacting conductivity:

1. Press the MENU button
2. Select Calibrate. Press ENTER.
3. Select Sensor 1 or Sensor 2 corresponding to contacting conductivity. Press ENTER.
4. Select Conductivity. Press ENTER.

The adjacent screen will appear. To calibrate Conductivity or Temperature, scroll to the desired item and press ENTER.

```
S1: 1.234µS/cm   25.0ºC
S2: 12.34pH      25.0ºC
   SN Calibrate?
 Conductivity
 Temperature
```

The following sub-sections show the initial display screen that appears for each calibration routine. Use the **flow diagram for Conductivity calibration** at the end of Sec. 7 and the live screen prompts for each routine to complete calibration.

The adjacent screen appears after selecting **Conductivity calibration:**

```
S1: 1.234µS/cm   25.0ºC
S2: 12.34pH      25.0ºC
   SN Calibration
 Zero Cal
 In Process Cal
 Meter Cal
 Cell K:   1.00000/cm
```

7.4.2 ENTERING THE CELL CONSTANT

New conductivity sensors rarely need calibration. The cell constant printed on the label is sufficiently accurate for most applications. The cell constant should be entered:

- When the unit is installed for the first time
- When the probe is replaced

The display screen for entering a cell Constant for the sensor is shown. The default value is displayed in **bold type.**

```
S1: 1.234µS/cm    25.0ºC
S2: 12.34pH       25.0ºC
  SN Cell Constant
 1.00000 /cm
```

7.4.3 ZEROING THE INSTRUMENT

This procedure is used to compensate for small offsets to the conductivity signal that are present even when there is no conductivity to be measured. This procedure is affected by the length of extension cable and should always be repeated if any changes in extension cable or sensor have been made. **Electrically connect the conductivity probe as it will actually be used and place the measuring portion of the probe in air. Be sure the probe is dry.**

The adjacent screen will appear after selecting **Zero Cal** from the Conductivity Calibration screen:

```
S1: 1.234µS/cm    25.0ºC
S2: 12.34pH       25.0ºC
     SN Zero Cal
 In Air
 In Water
```

The adjacent screen will appear if zero Cal is successful. The screen will return to the conductivity Cal Menu.

```
S1: 1.234µS/cm    25.0ºC
S2: 12.34pH       25.0ºC
     SN Zero Cal
 Sensor Zero Done
```

The adjacent screen may appear if zero Cal is unsuccessful.

```
S1: 1.234µS/cm    25.0ºC
S2: 12.34pH       25.0ºC
     SN Zero Cal
 Sensor Zero Fail
 Offset too high

 Press EXIT
```

7.4.4 CALIBRATING THE SENSOR IN A CONDUCTIVITY STANDARD (IN PROCESS CAL)

This procedure is used to calibrate the sensor and analyzer against a solution of known conductivity. This is done by submerging the probe in the sample of known conductivity, then adjusting the displayed value, if necessary, to correspond to the conductivity value of the sample. Turn temperature correction off and use the conductivity of the standard. Use a calibrated thermometer to measure temperature. The probe must be cleaned before performing this procedure.

The adjacent screen will appear after selecting In **Process Cal** from the Conductivity Calibration screen:

```
S1: 1.234µS/cm    25.0ºC
S2: 12.34pH       25.0ºC
  SN InProcess Cal
 Wait for stable
 reading.
```

The adjacent screen will appear if In Process Cal is successful. The screen will return to the conductivity Cal Menu.

```
S1: 1.234µS/cm   25.0ºC
S2: 12.34pH      25.0ºC
 SN InProcess Cal
Updated   cell
constant:
1.00135/cm
```

The adjacent screen may appear if In Process Cal is unsuccessful. The screen will return to the conductivity Cal Men

```
S1: 1.234µS/cm   25.0ºC
S2: 12.34pH      25.0ºC
 SN InProcess Cal
Calibration
Error

Press EXIT
```

7.4.5 CALIBRATING THE SENSOR TO A LABORATORY INSTRUMENT (METER CAL)

This procedure is used to check and correct the conductivity reading of the Model 1056 using a laboratory conductivity instrument. This is done by submerging the conductivity probe in a bath and measuring the conductivity of a grab sample of the same bath water with a separate laboratory instrument. The Model 1056 reading is then adjusted to match the conductivity reading of the lab instrument.

The adjacent screen will appear after selecting **Meter Cal** from the Conductivity Calibration screen:

```
S1: 1.234µS/cm   25.0ºC
S2: 12.34pH      25.0ºC
   SN Meter Cal
Use precision
resistors only
```

After pressing ENTER, the display shows the live value measured by the sensor

```
S1: 1.234µS/cm   25.0ºC
S2: 12.34pH      25.0ºC
  SN Enter Value
xx.xx kΩ
```

If the meter cal is successful the screen will return to the conductivity Cal Menu.

The adjacent screen will appear if Meter Cal is unsuccessful. The screen will return to the conductivity Cal Menu.

```
S1: 1.234µS/cm   25.0ºC
S2: 12.34pH      25.0ºC
   SN Meter Cal
Calibration
Error

Press EXIT
```

7.4.6 Cal Factor

Upon initial installation and power up, if **4-electrode** was selected for the sensor type in the **Quick Start** menus, the user enters a Cell Constant and a “Cal Factor” using the instrument keypad. The cell constant is needed to convert measured conductance to conductivity as displayed on the analyzer screen. The “Cal Factor” entry is needed increase the accuracy of the live conductivity readings, especially at low conductivity readings below 20uS/cm. Both the Cell Constant and the “Cal Factor” are printed on the tag attached to the 4-electrode sensor/cable.

The display screen for entering Cal Factor is shown. The default value is displayed in **bold type**. If necessary after initial installation and start-up, enter the “Cal Factor” as printed on the sensor tag.

```
S1: 1.234µS/cm   25.0ºC
S2: 12.34pH      25.0ºC
   SN Cal Factor
0.95000 /cm
```

7.5 TOROIDAL CONDUCTIVITY CALIBRATION

7.5.1 DESCRIPTION

Calibration is the process of adjusting or standardizing the analyzer to a lab test or a calibrated laboratory instrument, or standardizing to some known reference (such as a conductivity standard). This section contains procedures for the first time use and for routine calibration of the Model 1056 analyzer.

THIS SECTION DESCRIBES HOW TO CALIBRATE THE MODEL 1056 WITH AN ATTACHED INDUCTIVE/TOROIDAL CONDUCTIVITY SENSOR. THE FOLLOWING CALIBRATION ROUTINES ARE COVERED

TABLE 7-4 Toroidal Conductivity Calibration

Measure	Sec.	Calibration function: default value	Description
Toroidal Conductivity	7.5.2	Cell K: 3.00000/cm	Enter the cell Constant for the sensor
	7.5.3	Zero Cal	Zeroing the analyzer with the sensor attached
	7.5.4	In Process Cal	Standardizing the sensor to a known conductivity

A detailed flow diagram is provided at the end of Sec. 7 to guide you through the calibration routines.

To calibrate toroidal conductivity:

1. Press the **MENU** button
2. Select **Calibrate**. Press ENTER.
3. Select **Sensor 1** or **Sensor 2** corresponding to Toroidal Conductivity. Press ENTER.
4. Select **Conductivity**. Press ENTER.

The adjacent screen will appear. To calibrate Toroidal Conductivity or Temperature, scroll to the desired item and press ENTER

```
S1: 1.234µS/cm    25.0ºC
S2: 12.34pH       25.0ºC
   SN Calibrate?
Conductivity
Temperature
```

The following sub-sections show the initial display screen that appears for each calibration routine. Use the **flow diagram for Conductivity calibration** at the end of Sec. 7 and the live screen prompts to complete calibration.

The adjacent screen appears after selecting **Conductivity calibration:**

```
S1: 1.234µS/cm    25.0ºC
S2: 12.34pH       25.0ºC
   SN Calibration
Zero Cal
In Process Cal
Cell K:      1.00000/cm
```

7.5.2 ENTERING THE CELL CONSTANT

New conductivity sensors rarely need calibration. The cell constant printed on the label is sufficiently accurate for most applications. The cell constant should be entered:

- When the unit is installed for the first time
- When the probe is replaced
- During troubleshooting

This procedure sets up the analyzer for the probe type connected to the analyzer. Each type of probe has a specific cell constant:

```
S1: 1.234µS/cm    25.0ºC
S2: 12.34pH       25.0ºC
    SN Cell Constant
 3.00000 /cm
```

The display screen for entering a cell constant for the sensor is shown. The default value is displayed in **bold type.**

7.5.3 ZEROING THE INSTRUMENT

This procedure is used to compensate for small offsets to the conductivity signal that are present even when there is no conductivity to be measured. This procedure is affected by the length of extension cable and should always be repeated if any changes in extension cable or sensor have been made. Electrically connect the conductivity probe as it will actually be used and place the measuring portion of the probe in air.

```
S1: 1.234µS/cm    25.0ºC
S2: 12.34pH       25.0ºC
       SN Zero Cal
 In Air
 In Water
```

The adjacent screen will appear after selecting **Zero Cal** from the Conductivity Calibration screen:

The adjacent screen will appear if zero Cal is successful. The screen will return to the conductivity Cal Menu.

```
S1: 1.234µS/cm    25.0ºC
S2: 12.34pH       25.0ºC
      SN Zero Cal
 Sensor Zero Done
```

The adjacent screen may appear if zero Cal is unsuccessful.

```
S1: 1.234µS/cm    25.0ºC
S2: 12.34pH       25.0ºC
      SN Zero Cal
 Sensor Zero Fail
 Offset too high

 Press EXIT
```

7.5.4 CALIBRATING THE SENSOR IN A CONDUCTIVITY STANDARD (IN PROCESS CAL)

This procedure is used to check and correct the conductivity reading of the Model 1056 to ensure that the reading is accurate. This is done by submerging the probe in the sample of known conductivity, then adjusting the displayed value, if necessary, to correspond to the conductivity value of the sample. The probe must be cleaned before performing this procedure. The temperature reading must also be checked and standardized if necessary, prior to performing this procedure.

```
S1: 1.234µS/cm    25.0ºC
S2: 12.34pH       25.0ºC
    SN InProcess Cal
 Wait for stable
 reading.
```

The adjacent screen will appear after selecting In Process Cal from the Conductivity Calibration screen:

The following screen will appear if In Process Cal is successful. The screen will return to the conductivity Cal Menu.

```
S1: 1.234µS/cm    25.0ºC
S2: 12.34pH       25.0ºC
  SN InProcess Cal
Updated    cell
constant:
3.01350/cm
```

This screen may appear if In Process Cal is unsuccessful. The screen will return to the conductivity Cal Menu.

```
S1: 1.234µS/cm    25.0ºC
S2: 12.34pH       25.0ºC
  SN InProcess Cal
Calibration
Error

Press EXIT
```

7.6 CALIBRATION —CHLORINE

With a Chlorine measurement board and the appropriate sensor, Model 1056 can measure any of four variants of Chlorine:

- Free Chlorine
- Total Chlorine
- Monochloramine
- pH-independent Free Chlorine

The section describes how to calibrate any compatible amperometric chlorine sensor. The following calibration routines are covered in the family of supported Chlorine sensors:

- **Air Cal**
- **Zero Cal**
- **In Process Cal**

7.6.1 CALIBRATION — FREE CHLORINE

7.6.1.1 DESCRIPTION

A free chlorine sensor generates a current directly proportional to the concentration of free chlorine in the sample. Calibrating the sensor requires exposing it to a solution containing no chlorine (zero standard) and to a solution containing a known amount of chlorine (full-scale standard). The **zero calibration** is necessary because chlorine sensors, even when no chlorine is in the sample, generate a small current called the residual current. The analyzer compensates for the residual current by subtracting it from the measured current before converting the result to a chlorine value. New sensors require zeroing before being placed in service, and sensors should be zeroed whenever the electrolyte solution is replaced. Either of the following makes a good zero standard:

- Deionized water containing about 500 ppm sodium chloride. Dissolve 0.5 grams (1/8 teaspoonful) of table salt in 1 liter of water. DO NOT USE DEIONIZED WATER ALONE FOR ZEROING THE SENSOR. THE CONDUCTIVITY OF THE ZERO WATER MUST BE GREATER THAN 50 µS/cm.
- Tap water known to contain no chlorine. Expose tap water to bright sunlight for at least 24 hours.

The purpose of the In **Process calibration** is to establish the slope of the calibration curve. Because stable chlorine standards do not exist, **the sensor must be calibrated against a test run on a grab sample of the process liquid.** Several manufacturers offer portable test kits for this purpose. Observe the following precautions when taking and testing the grab sample.

- Take the grab sample from a point as close to the sensor as possible. Be sure that taking the sample does not alter the flow of the sample to the sensor. It is best to install the sample tap just downstream from the sensor.
- Chlorine solutions are unstable. Run the test immediately after taking the sample. Try to calibrate the sensor when the chlorine concentration is at the upper end of the normal operating range.

THIS SECTION DESCRIBES HOW TO CALIBRATE THE MODEL 1056 WITH A FREE CHLORINE SENSOR. THE FOLLOWING CALIBRATION ROUTINES ARE COVERED.

TABLE 7-5 Free Chlorine Calibration Routines

Measure	Sec.	Calibration function: default value	Description
Free Chlorine	7.6.1.2	Zero Cal	Zeroing the sensor in solution with zero free chlorine
	7.6.1.3	In Process Cal	Standardizing to a sample of known chlorine concentration

A detailed flow diagram is provided at the end of Sec. 7 to guide you through the calibration routines.

To calibrate free chlorine:

1. Press the **MENU** button
2. Select **Calibrate**. Press ENTER.
3. Select **Sensor 1** or **Sensor 2** corresponding to Free Chlorine. Press ENTER.
4. Select **Free Chlorine**. Press ENTER.

The adjacent screen will appear. To calibrate Free Chlorine or Temperature, scroll to the desired item and press ENTER.

```
S1: 1.234µS/cm   25.0ºC
S2: 12.34pH      25.0ºC
   SN Calibrate?
Free Chlorine
Temperature
```

The following sub-sections show the initial display screen that appears for each calibration routine. Use the **flow diagram for Chlorine calibration** at the end of Sec. 7 and the live screen prompts to complete calibration.

The adjacent screen appears after selecting **Free Chlorine calibration:**

```
S1: 1.234µS/cm   25.0ºC
S2: 12.34pH      25.0ºC
   SN Calibration
Zero Cal
In Process Cal
```

7.6.1.2 ZEROING THE SENSOR.

The adjacent screen will appear during Zero Cal. Be sure sensor has been running in zero solution for at least two hours before starting zero step.

```
S1: 1.234µS/cm   25.0ºC
S2: 12.34pH      25.0ºC
   SN Zero Cal
Zeroing
Wait
```

The adjacent screen will appear if In Zero Cal is successful. The screen will return to the Amperometric Cal Menu.

```
S1: 1.234µS/cm   25.0ºC
S2: 12.34pH      25.0ºC
   SN Zero Cal
Sensor zero done
```

The adjacent screen may appear if In Zero Cal is unsuccessful. The screen will return to the Amperometric Cal Menu.

```
S1: 1.234µS/cm   25.0ºC
S2: 12.34pH      25.0ºC
   SN Zero Cal
Sensor zero failed

Press EXIT
```

7.6.1.3 IN PROCESS CALIBRATION

The adjacent screen will appear prior to In Process Cal

```
S1: 1.234µS/cm   25.0ºC
S2: 12.34pH      25.0ºC
   SN InProcess Cal
Wait for stable
reading.
```

If the In Process Cal is successful, the screen will return to the Cal sub-menu.
The adjacent screen may appear if In Zero Cal is unsuccessful. The screen will return to the Amperometric Cal Menu.

```
S1: 1.234µS/cm    25.0ºC
S2: 12.34pH       25.0ºC
 SN InProcess Cal
Calibration
Error

Press EXIT
```

7.6.2 CALIBRATION — TOTAL CHLORINE

7.6.2.1 DESCRIPTION

Total chlorine is the sum of free and combined chlorine. The continuous determination of total chlorine requires two steps. First, the sample flows into a conditioning system (TCL) where a pump continuously adds acetic acid and potassium iodide to the sample. The acid lowers the pH, which allows total chlorine in the sample to quantitatively oxidize the iodide in the reagent to iodine. In the second step, the treated sample flows to the sensor. The sensor is a membrane-covered amperometric sensor, whose output is proportional to the concentration of iodine. Because the concentration of iodine is proportional to the concentration of total chlorine, the analyzer can be calibrated to read total chlorine. Because the sensor really measures iodine, calibrating the sensor requires exposing it to a solution containing no iodine (zero standard) and to a solution containing a known amount of iodine (full-scale standard). The **Zero calibration** is necessary because the sensor, even when no iodine is present, generates a small current called the residual current. The analyzer compensates for the residual current by subtracting it from the measured current before converting the result to a total chlorine value. New sensors require zeroing before being placed in service, and sensors should be zeroed whenever the electrolyte solution is replaced. The best zero standard is deionized water.

The purpose of the **In Process Calibration** is to establish the slope of the calibration curve.
Because stable total chlorine standards do not exist, **the sensor must be calibrated against a test run on a grab sample of the process liquid**. Several manufacturers offer portable test kits for this purpose. Observe the following
precautions when taking and testing the grab sample:
• Take the grab sample from a point as close as possible to the inlet of the TCL sample conditioning system. Be sure that taking the sample does not alter the flow through the TCL.
• Chlorine solutions are unstable. Run the test immediately after taking the sample. Try to calibrate the sensor when the chlorine concentration is at the upper end of the normal operating range.

Note this measurement must be made using the Model TCL total chlorine sample conditioning system.

THIS SECTION DESCRIBES HOW TO CALIBRATE THE MODEL 1056 WITH AN ATTACHED TOTAL CHLORINE SENSOR. THE FOLLOWING CALIBRATION ROUTINES ARE COVERED.

TABLE 7- 6 Total Chlorine Calibration Routines

Measure	Sec.	Calibration function: default value	Description
Total Chlorine	7.6.2.2	Zero Cal	Zeroing the sensor in solution with zero total chlorine
	7.6.2.3	In Process Cal	Standardizing to a sample of known chlorine concentration

A detailed flow diagram is provided at the end of Sec. 7 to guide you through the calibration routines.

To calibrate total chlorine:
1. Press the **MENU** button
2. Select **Calibrate**. Press ENTER.
3. Select **Sensor 1** or **Sensor 2** corresponding to Total Chlorine. Press ENTER.
4. Select **Tota**l **Chlorine**. Press ENTER.

The adjacent screen will appear. To calibrate Total Chlorine or Temperature, scroll to the desired item and press ENTER

```
S1: 1.234µS/cm    25.0ºC
S2: 12.34pH       25.0ºC
   SN Calibrate?
 Total Chlorine
 Temperature
```

The following sub-sections provide you with the initial display screen that appears for each calibration routine. Use the **flow diagram for Chlorine calibration** at the end of Sec. 7 and the live screen prompts to complete calibration.

```
S1: 1.234µS/cm    25.0ºC
S2: 12.34pH       25.0ºC
    SN Calibration
Zero Cal
In Process Cal
```

This adjacent screen appears after selecting **Total Chlorine calibration:**

7.6.2.2 ZEROING THE SENSOR.

The adjacent screen will appear during Zero Cal. Be sure sensor has been running in zero solution for at least two hours before starting zero step.

```
S1: 1.234µS/cm    25.0ºC
S2: 12.34pH       25.0ºC
    SN Zero Cal
Zeroing
Wait
```

The adjacent screen will appear if In Zero Cal is successful. The screen will return to the Amperometric Cal Menu.

```
S1: 1.234µS/cm    25.0ºC
S2: 12.34pH       25.0ºC
    SN Zero Cal
Sensor zero done
```

The adjacent screen may appear if In Zero Cal is unsuccessful. The screen will return to the Amperometric Cal Menu.

```
S1: 1.234µS/cm    25.0ºC
S2: 12.34pH       25.0ºC
    SN Zero Cal
Sensor zero failed

Press EXIT
```

7.6.2.3 IN PROCESS CALIBRATION

The adjacent screen will appear prior to In Process Cal

```
S1: 1.234µS/cm    25.0ºC
S2: 12.34pH       25.0ºC
  SN InProcess Cal
Wait for stable
reading.
```

If the In Process Cal is successful, the screen will return to the Cal sub-menu.

The adjacent screen may appear if In Process Cal is unsuccessful. The screen will return to the Amperometric Cal Menu.

```
S1: 1.234µS/cm    25.0ºC
S2: 12.34pH       25.0ºC
  SN InProcess Cal
Calibration error

Press EXIT
```

7.6.3 CALIBRATION - MONOCHLORAMINE

7.6.3.1 DESCRIPTION

A monochloramine sensor generates a current directly proportional to the concentration of monochloramine in the sample. Calibrating the sensor requires exposing it to a solution containing no monochloramine (zero standard) and to a solution containing a known amount of monochloramine (full-scale standard). The **Zero calibration** is necessary because monochloramine sensors, even when no monochloramine is in the sample, generate a small current called the residual or zero current. The analyzer compensates for the residual current by subtracting it from the measured current before converting the result to a monochloramine value. New sensors require zeroing before being placed in service, and sensors should be zeroed whenever the electrolyte solution is replaced. The best zero standard is deionized water.

The purpose of the In **Process calibration** is to establish the slope of the calibration curve. Because stable monochloramine standards do not exist, **the sensor must be calibrated against a test run on a grab sample of the process liquid**. Several manufacturers offer portable test kits for this purpose. Observe the following precautions when taking and testing the grab sample.

• Take the grab sample from a point as close to the sensor as possible. Be sure that taking the sample does not alter the flow of the sample to the sensor. It is best to install the sample tap just downstream from the sensor.

• Monochloramine solutions are moderately unstable. Run the test as soon as possible after taking the sample. Try to calibrate the sensor when the monochloramine concentration is at the upper end of the normal operating range.

THIS SECTION DESCRIBES HOW TO CALIBRATE THE MODEL 1056 WITH AN ATTACHED MONOCHLORAMINE SENSOR. THE FOLLOWING CALIBRATION ROUTINES ARE COVERED.

TABLE 7-7 Monochloramine Calibration Routines

Measure	Sec.	Calibration function: default value	Description
Monochloramine	7.6.3.2	Zero Cal	Zeroing the sensor in solution with zero monochloramine
	7.6.3.3	In Process Cal	Standardizing to a sample of known chlorine concentration

A detailed flow diagram is provided at the end of Sec. 7 to guide you through the calibration routines.

To calibrate monochloramine:

1. Press the **MENU** button
2. Select **Calibrate**. Press ENTER.
3. Select **Sensor 1** or **Sensor 2** corresponding to Monochloramine. Press ENTER.
4. Select **Monochloramine**. Press ENTER.

The adjacent screen will appear. To calibrate Monochloramine or Temperature, scroll to the desired item and press ENTER.

```
S1: 1.234µS/cm    25.0ºC
S2: 12.34pH       25.0ºC
    SN Calibrate?
Monochloramine
Temperature
```

The following sub-sections provide you with the initial display screen that appears for each calibration routine. Use the **flow diagram for Chlorine calibration** at the end of Sec. 7 and the live screen prompts to complete calibration.

The adjacent screen appears after selecting Monochloramine calibration:

```
S1: 1.234µS/cm    25.0ºC
S2: 12.34pH       25.0ºC
    SN Calibration
Zero Cal
In Process Cal
```

7.6.3.2 ZEROING THE SENSOR.

The adjacent screen will appear during Zero Cal. Be sure sensor has been running in zero solution for at least two hours before starting zero step.

```
S1: 1.234µS/cm    25.0ºC
S2: 12.34pH       25.0ºC
     SN Zero Cal
 Zeroing
 Wait
```

The adjacent screen will appear if In Zero Cal is successful. The screen will return to the Amperometric Cal Menu.

```
S1: 1.234µS/cm    25.0ºC
S2: 12.34pH       25.0ºC
     SN Zero Cal
 Sensor zero done
```

The adjacent screen may appear if In Zero Cal is unsuccessful. The screen will return to the Amperometric Cal Menu.

```
S1: 1.234µS/cm    25.0ºC
S2: 12.34pH       25.0ºC
     SN Zero Cal
Sensor zero failed

Press EXIT
```

7.6.3.3 IN PROCESS CALIBRATION

The adjacent screen will appear prior to In Process Cal

```
S1: 1.234µS/cm    25.0ºC
S2: 12.34pH       25.0ºC
   SN InProcess Cal
 Wait for stable
 reading.
```

If the In Process Cal is successful, the screen will return to the Cal sub-menu.

The adjacent screen may appear if In Process Cal is unsuccessful. The screen will return to the Amperometric Cal Menu.

```
S1: 1.234µS/cm    25.0ºC
S2: 12.34pH       25.0ºC
   SN InProcess Cal
 Calibration
 Error

 Press EXIT
```

7.6.4 pH-INDEPENDENT FREE CHLORINE MEASUREMENT

7.6.4.1 DESCRIPTION

A free chlorine sensor generates a current directly proportional to the concentration of free chlorine in the sample. Calibrating the sensor requires exposing it to a solution containing no chlorine (zero standard) and to a solution containing a known amount of chlorine (full-scale standard). The zero calibration is necessary because chlorine sensors, even when no chlorine is in the sample, generate a small current called the residual current. The analyzer compensates for the residual current by subtracting it from the measured current before converting the result to a chlorine value. New sensors require zeroing before being placed in service, and sensors should be zeroed whenever the electrolyte solution is replaced. Either of the following makes a good zero standard:

• Deionized water.

• Tap water known to contain no chlorine. Expose tap water to bright sunlight for at least 24 hours.

The purpose of the In **Process calibration** is to establish the slope of the calibration curve. Because stable chlorine standards do not exist, **the sensor must be calibrated against a test run on a grab sample of the process liquid.**

Several manufacturers offer portable test kits for this purpose. Observe the following precautions when taking and testing the grab sample.

• Take the grab sample from a point as close to the sensor as possible. Be sure that taking the sample does not alter the flow of the sample to the sensor. It is best to install the sample tap just downstream from the sensor.

• Chlorine solutions are unstable. Run the test immediately after taking the sample. Try to calibrate the sensor when the chlorine concentration is at the upper end of the normal operating range.

Note: This measurement is made using the model 498CL-01 - pH-independent Free Chlorine sensor manufactured by Rosemount Analytical.

THIS SECTION DESCRIBES HOW TO CALIBRATE THE MODEL 1056 WITH AN ATTACHED PH-INDEPENDENT FREE CHLORINE SENSOR. THE FOLLOWING CALIBRATION ROUTINES ARE COVERED.

TABLE 7- 8 pH-independent Free Chlorine Calibration Routines

Measure	Sec.	Calibration function: default value	Description
pH-independent Free Chlorine	7.6.4.2	Zero Cal	Zeroing the sensor in solution with zero free chlorine
	7.6.4.3	In Process Cal	Standardizing to a sample of known chlorine concentration

A detailed flow diagram is provided at the end of Sec. 7 to guide you through the calibration routines.

To calibrate pH-independent free chlorine:

1. Press the **MENU** button
2. Select **Calibrate**. Press ENTER.
3. Select **Sensor 1** or **Sensor 2** corresponding to pH-independent free chlorine. Press ENTER.
4. Select **pH Ind. Free Cl.** Press ENTER.

The adjacent screen will appear. To calibrate pH-independent Free Chlorine or Temperature, scroll to the desired item and press ENTER.

```
S1: 1.234µS/cm    25.0ºC
S2: 12.34pH       25.0ºC
   SN Calibrate?
pH Ind. Free Cl
Temperature
```

The following sub-sections provide you with the initial display screen that appears for each calibration routine. Use the **flow diagram for Chlorine calibration** at the end of Sec. 7 and the live screen prompts to complete calibration.

The adjacent screen appears after selecting **pH-independent free chlorine calibration:**

```
S1: 1.234µS/cm   25.0ºC
S2: 12.34pH      25.0ºC
   SN Calibration
Zero Cal
In Process Cal
```

7.6.4.2 ZEROING THE SENSOR.

The adjacent screen will appear during Zero Cal

```
S1: 1.234µS/cm   25.0ºC
S2: 12.34pH      25.0ºC
   SN Zero Cal
Zeroing
Wait
```

The adjacent screen will appear if In Zero Cal is successful. The screen will return to the Amperometric Cal Menu.

```
S1: 1.234µS/cm   25.0ºC
S2: 12.34pH      25.0ºC
   SN Zero Cal
Sensor zero done
```

The adjacent screen may appear if In Zero Cal is unsuccessful. The screen will return to the Amperometric Cal Menu.

```
S1: 1.234µS/cm   25.0ºC
S2: 12.34pH      25.0ºC
   SN Zero Cal
Sensor zero failed

Press EXIT
```

7.6.4.3 IN PROCESS CALIBRATION

The following screen will appear prior to In Process Cal

```
S1: 1.234µS/cm   25.0ºC
S2: 12.34pH      25.0ºC
  SN InProcess Cal
Wait for stable
reading.
```

If the In Process Cal is successful, the screen will return to the Cal sub-menu.

The adjacent screen may appear if In Process Cal is unsuccessful. The screen will return to the Amperometric Cal Menu.

```
S1: 1.234µS/cm   25.0ºC
S2: 12.34pH      25.0ºC
  SN InProcess Cal
Calibration
Error

Press EXIT
```

7.7 CALIBRATION — OXYGEN

7.7.1 DESCRIPTION

Oxygen sensors generate a current directly proportional to the concentration of dissolved oxygen in the sample. Calibrating the sensor requires exposing it to a solution containing no oxygen (zero standard) and to a solution containing a known amount of oxygen (full-scale standard). The **Zero Calibration** is necessary because oxygen sensors, even when no oxygen is present in the sample, generate a small current called the residual current. The analyzer compensates for the residual current by subtracting it from the measured current before converting the result to a dissolved oxygen value. New sensors require zeroing before being placed in service, and sensors should be zeroed whenever the electrolyte solution is replaced. The recommended zero standard is 5% sodium sulfite in water, although oxygen-free nitrogen can also be used. **The Model 499A TrDO sensor, used for the determination of trace (ppb) oxygen levels, has very low residual current and does not normally require zeroing.** The residual current in the 499A TrDO sensor is equivalent to less than 0.5 ppb oxygen.

The purpose of the **In Process Calibration** is to establish the slope of the calibration curve. Because the solubility of atmospheric oxygen in water as a function of temperature and barometric pressure is well known, the natural choice for a full-scale standard is air-saturated water. However, air-saturated water is difficult to prepare and use, so the universal practice is to use air for calibration. From the point of view of the oxygen sensor, air and air-saturated water are identical. The equivalence comes about because the sensor really measures the chemical potential of oxygen. Chemical potential is the force that causes oxygen molecules to diffuse from the sample into the sensor where they can be measured. It is also the force that causes oxygen molecules in air to dissolve in water and to continue to dissolve until the water is saturated with oxygen. Once the water is saturated, the chemical potential of oxygen in the two phases (air and water) is the same.

Oxygen sensors generate a current directly proportional to the rate at which oxygen molecules diffuse through a membrane stretched over the end of the sensor. The diffusion rate depends on the difference in chemical potential between oxygen in the sensor and oxygen in the sample. An electrochemical reaction, which destroys any oxygen molecules entering the sensor, keeps the concentration (and the chemical potential) of oxygen inside the sensor equal to zero. Therefore, the chemical potential of oxygen in the sample alone determines the diffusion rate and the sensor current.

When the sensor is calibrated, the chemical potential of oxygen in the standard determines the sensor current. Whether the sensor is calibrated in air or air-saturated water is immaterial. The chemical potential of oxygen is the same in either phase. Normally, to make the calculation of solubility in common units (like ppm DO) simpler, it is convenient to use water-saturated air for calibration. Automatic air calibration is standard. The user simply exposes the sensor to water-saturated air. The analyzer monitors the sensor current. When the current is stable, the analyzer stores the current and measures the temperature using a temperature element inside the oxygen sensor. The user must enter the barometric pressure.

From the temperature the analyzer calculates the saturation vapor pressure of water. Next, it calculates the pressure of dry air by subtracting the vapor pressure from the barometric pressure. Using the fact that dry air always contains 20.95% oxygen, the analyzer calculates the partial pressure of oxygen. Once the analyzer knows the partial pressure of oxygen, it uses the Bunsen coefficient to calculate the equilibrium solubility of atmospheric oxygen in water at the prevailing temperature. At 25°C and 760 mm Hg, the equilibrium solubility is 8.24 ppm. Often it is too difficult or messy to remove the sensor from the process liquid for calibration. In this case, the sensor can be calibrated against a measurement made with a portable laboratory instrument. The laboratory instrument typically uses a membrane-covered amperometric sensor that has been calibrated against water-saturated air.

THIS SECTION DESCRIBES HOW TO CALIBRATE THE MODEL 1056 WITH AN OXYGEN SENSOR. THE FOLLOWING CALIBRATION ROUTINES ARE COVERED.

TABLE 7- 9 Oxygen Calibration Routines

Measure	Sec.	Calibration function: default value	Description
Oxygen	7.7.2	Zero Cal	Zeroing the sensor in a medium with zero oxygen
	7.7.3	Air Cal	Calibrating the sensor in a water-saturated air sample
	7.7.4	In Process Cal	Standardizing to a sample of known oxygen concentration
	7.7.5	Sen@ 25°C:2500nA/ppm	Entering a known slope value for sensor response
	7.7.6	Zero Current: 0nA	Entering a known zero current for a specific sensor

A detailed flow diagram is provided at the end of Sec. 7 to guide you through the calibration routines.

Oxygen sensors generate a current directly proportional to the concentration of dissolved oxygen in the sample. Calibrating the sensor requires exposing it to a solution containing no oxygen (zero standard) and to a solution containing a known amount of oxygen (full-scale standard). Automatic air calibration is standard. The user simply exposes the sensor to water-saturated air.

To calibrate oxygen:

1. Press the **MENU** button
2. Select **Calibrate**. Press ENTER.
3. Select **Sensor 1** or **Sensor 2** corresponding to oxygen. Press ENTER.
4. Select **Oxygen**. Press ENTER.

The adjacent screen will appear. To calibrate Oxygen or Temperature, scroll to the desired item and press ENTER

```
S1: 1.234µS/cm   25.0ºC
S2: 12.34pH      25.0ºC
   SN Calibrate?
Oxygen
Temperature
```

The following sub-sections provide you with the initial display screen that appears for each calibration routine. Use the **flow diagram for Oxygen calibration** at the end of Sec. 7 and the live screen prompts for each routine to complete calibration.

The adjacent screen appears after selecting **Oxygen calibration:**

```
S1: 1.234µS/cm   25.0ºC
S2: 12.34pH      25.0ºC
      SN Calibration
Air Cal
Zero Cal
In Process Cal
Sen@ 25°C:2500nA/ppm
-----------------------------------------
Zero Current:  1234nA
```

Air calibration criteria can be changed. The following criteria can be adjusted:

- Stabilization time (default 10 sec.)
- Stabilization pH value (default 0.05 ppm)
- Salinity of the solution to be measured (default 00.0 parts per thousand)

The adjacent screen will appear to allow adjustment of these criteria”

```
S1: 1.234µS/cm   25.0ºC
S2: 12.34pH      25.0ºC
      SN Setup
Stable Time:  10 sec
Stable Delta:  0.05 ppm
Salinity:    00.0 ‰
```

7.7.2 ZEROING THE SENSOR.

The adjacent screen will appear during Zero Cal

```
S1:          1.234 nA
S2:          1.456 nA
    SN Zero Cal
Zeroing
Wait
```

The adjacent screen will appear if In Zero Cal is successful. The screen will return to the Amperometric Cal Menu.

```
S1:          1.234 nA
S2:          1.456 nA
    SN Zero Cal
Sensor zero done
```

The adjacent screen may appear if In Zero Cal is unsuccessful. The screen will return to the Amperometric Cal Menu.

```
S1:          1.234 nA
S2:          1.456 nA
    SN Zero Cal
Sensor zero failed

Press EXIT
```

7.7.3 CALIBRATING THE SENSOR IN AIR

The adjacent screen will appear prior to Air Cal

```
S1: 1.234µS/cm   25.0ºC
S2: 12.34pH      25.0ºC
    SN Air Cal
Start Calibration
Setup
```

The adjacent screen will appear if In Air Cal is successful. The screen will return to the Amperometric Cal Menu.

```
S1: 1.234µS/cm   25.0ºC
S2: 12.34pH      25.0ºC
    SN Air Cal
Done
```

The adjacent screen will appear if In Air Cal is successful. The screen will return to the Amperometric Cal Menu.

```
S1: 1.234µS/cm   25.0ºC
S2: 12.34pH      25.0ºC
    SN Air Cal
Failure
Check Sensor

Press EXIT
```

7.7.4 CALIBRATING THE SENSOR AGAINST A STANDARD INSTRUMENT (IN PROCESS CAL)

The adjacent screen will appear prior to In Process Cal

```
S1: 1.234µS/cm   25.0ºC
S2: 12.34pH      25.0ºC
  SN InProcess Cal
Wait for stable
reading.
```

If the In Process Cal is successful, the screen will return to the Cal sub-menu.

The adjacent screen may appear if In Zero Cal is unsuccessful. The screen will return to the Amperometric Cal Menu.

```
S1: 1.234µS/cm   25.0ºC
S2: 12.34pH      25.0ºC
  SN InProcess Cal
Calibration
Error

Press EXIT
```

7.8 CALIBRATION — OZONE

7.8.1 DESCRIPTION

An ozone sensor generates a current directly proportional to the concentration of ozone in the sample. Calibrating the sensor requires exposing it to a solution containing no ozone (zero standard) and to a solution containing a known amount of ozone (full-scale standard). The Zero Calibration is necessary because ozone sensors, even when no ozone is in the sample, generate a small current called the residual or zero current. The analyzer compensates for the residual current by subtracting it from the measured current before converting the result to an ozone value. New sensors require zeroing before being placed in service, and sensors should be zeroed whenever the electrolyte solution is replaced. The best zero standard is deionized water.

The purpose of the In Process Calibration is to establish the slope of the calibration curve. Because stable ozone standards do not exist, the sensor must be calibrated against a test run on a grab sample of the process liquid. Several manufacturers offer portable test kits for this purpose. Observe the following precautions when taking and testing the grab sample.

• Take the grab sample from a point as close to the sensor as possible. Be sure that taking the sample does not alter the flow of the sample to the sensor. It is best to install the sample tap just downstream from the sensor.
• Ozone solutions are unstable. Run the test immediately after taking the sample. Try to calibrate the sensor when the ozone concentration is at the upper end of the normal operating range.

THIS SECTION DESCRIBES HOW TO CALIBRATE THE MODEL 1056 WITH AN OZONE SENSOR. THE FOLLOWING CALIBRATION ROUTINES ARE COVERED.

TABLE 7- 10 Ozone Calibration Routines

Measure Ozone	Sec.	Calibration function: default value	Description
	7.8.2	Zero Cal	Zeroing the sensor in solution with zero ozone
	7.8.3	In Process Cal	Standardizing to a sample of known ozone concentration

A detailed flow diagram is provided at the end of Sec. 7 to guide you through the calibration routines.

To calibrate ozone:

1. Press the **MENU** button
2. Select **Calibrate**. Press ENTER.
3. Select **Sensor 1** or **Sensor 2** corresponding to ozone. Press ENTER.
4. Select **Ozone**. Press ENTER.

The adjacent screen will appear. To calibrate Ozone or Temperature, scroll to the desired item and press ENTER.

```
S1: 1.234µS/cm   25.0ºC
S2: 12.34pH      25.0ºC
   SN Calibrate?
Ozone
Temperature
```

The following sub-sections provide you with the initial display screen that appears for each calibration routine. Use the **flow diagram for Ozone calibration** at the end of Sec. 7 and the live screen prompts to complete calibration.

```
S1: 1.234µS/cm    25.0ºC
S2: 12.34pH       25.0ºC
   SN Calibration
Zero Cal
In Process Cal
```

The adjacent screen appears after selecting Ozone calibration:

7.8.2 ZEROING THE SENSOR.

The following screen will appear during Zero Cal

```
S1:            1.234 nA
S2:            1.456 nA
   SN Zero Cal
Zeroing
Wait
```

The following screen will appear if In Zero Cal is successful. The screen will return to the Amperometric Cal Menu.

```
S1:            1.234 nA
S2:            1.456 nA
   SN Zero Cal
Sensor zero done
```

The following screen may appear if In Zero Cal is unsuccessful. The screen will return to the Amperometric Cal Menu.

```
S1:            1.234 nA
S2:            1.456 nA
   SN Zero Cal
Sensor zero failed

Press EXIT
```

7.8.3 IN PROCESS CALIBRATION

The following screen will appear after selecting In Process Cal

```
S1: 1.234µS/cm    25.0ºC
S2: 12.34pH       25.0ºC
  SN InProcess Cal
Wait for stable
reading.
```

If the In Process Cal is successful, the screen will return to the Cal sub-menu.

The following screen may appear if In Zero Cal is unsuccessful. The screen will return to the Amperometric Cal Menu.

```
S1: 1.234µS/cm    25.0ºC
S2: 12.34pH       25.0ºC
  SN InProcess Cal
Calibration
Error

Press EXIT
```

7.9 CALIBRATING TEMPERATURE

7.9.1 DESCRIPTION

Most liquid analytical measurements require temperature compensation (except ORP). The Model 1056 performs temperature compensation automatically by applying internal temperature correction algorithms. Temperature correction can also be turned off. If temperature correction is off, the Model 1056 uses the manual temperature entered by the user in all temperature correction calculations.

THIS SECTION DESCRIBES HOW TO CALIBRATE TEMPERATURE IN THE MODEL 1056 ANALYZER. THE FOLLOWING CALIBRATION ROUTINE IS COVERED.

TABLE 7- 11 Temperature Calibration Routine

Measure	Sec.	Calibration function: default value	Description
Temperature	7.9.2	Calibrate	Enter a manual reference temperature for temperature compensation of the process measurement

A detailed flow diagram is provided at the end of Sec. 7 to guide you through the calibration routines.

To calibrate temperature:

1. Press the **MENU** button
2. Select **Calibrate**. Press ENTER.
3. Select **Sensor 1** or **Sensor 2** corresponding to the desired measurement. Press ENTER.
4. Select Temperature. Press ENTER.

The adjacent screen will appear.

```
S1: 1.234µS/cm    25.0ºC
S2: 12.34pH       25.0ºC
     SN Calibrate
+025.0°C
```

The following sub-section provides you with the initial display screen that appears for temperature calibration. Use the **flow diagram for Temp calibration** at the end of Sec. 7 to complete calibration.

```
S1: 1.234µS/cm    25.0ºC
S2: 12.34pH       25.0ºC
     SN Calibrate
Cal in progress.
Please wait.
```

7.9.2 CALIBRATION

The adjacent screen will appear during Temperature Cal.

If the sensor Temperature offset is greater than 5 ºC from the default value, the following screen will appear:

```
S1: 1.234µS/cm    25.0ºC
S2: 12.34pH       25.0ºC
  SN Temp Offset > 5°C
      Continue?
No
Yes
```

You may continue by selecting Yes or suspend this operation by selecting No.

If the Temp Cal is successful, the screen will return to the Cal Menu.

Note: To select automatic or manual temp compensation or to program temperature units as °C or °F, refer to Sec. 5.3 – Programming Temperature in this manual

7.10 TURBIDITY

7.10.1 DESCRIPTION

This section describes how to calibrate the turbidity sensor against a user-prepared standard as a 2-point calibration with di-ionized water, against a 20 NTU user-prepared standard as a single point calibration, and against a grab sample using a reference turbidimeter.

THIS SECTION DESCRIBES HOW TO CALIBRATE THE MODEL 1056 WITH AN ATTACHED TURBIDITY SENSOR AS PART OF THE COMPLETE CLARITY II TURBIDITY SYSTEM. THE FOLLOWING CALIBRATION ROUTINES ARE COVERED.

TABLE 7-12 TURBIDITY CALIBRATION ROUTINES

Measure	Sec.	Calibration function: default value	Description
Turbidity	7.10.2	Slope Calibration	Slope cal with pure water and a standard of known turbidity
	7.10.3	Standardize Calibration	Standardizing the sensor to a known turbidity
	7.10.4	Grab Calibration	Standardizing the sensor to a known turbidity based on a reference turbidimeter

A detailed flow diagram is provided at the end of Sec. 7 to guide you through the calibration routines.

To calibrate Turbidity:
1. Press the **MENU** button
2. Select **Calibrate**. Press ENTER.
3. Select **Sensor 1** or **Sensor 2** corresponding to Turbidity. Press ENTER.
4. Select **Turbidity.** Press ENTER.

The following screen will appear.

```
S1: 1.234µS/cm    25.0ºC
S2: 12.34pH       25.0ºC
    SN Calibrate?
Turbidity
```

The following sub-sections provide you with the initial display screen that appears for each calibration routine. Use the **flow diagram for Turbidity calibration** at the end of Sec. 7 and the live screen prompts to complete calibration.

```
S1: 1.234µS/cm    25.0ºC
S2: 12.34pH       25.0ºC
    SN Calibrate
Slope
Standard
Grab
```

7.10.2 SLOPE CALIBRATION — Turbidity

This section describes how to conduct a 2-point calibration of the turbidity sensor against a user-prepared 20NTU standard. The calibration requires two steps. First, immerse the sensor in filtered water having very low turbidity and measure the sensor output. Next, increase the turbidity of the filtered water by a known amount, typically 20 NTU, and measure the sensor output again. The analyzer takes the two measurements, applies a linearization correction (if necessary), and calculates the sensitivity. Sensitivity is the sensor output (in mV) divided by turbidity. A typical new sensor has a sensitivity of about 10 mV/NTU. As the sensor ages, the sensitivity decreases. The figure below illustrates how turbidity calibration works. Before beginning the calibration, the analyzer does a dark current measurement. Dark current is the signal generated by the detector when no light is falling on it. The analyzer subtracts the dark current from the raw scattered light signal and converts the result to turbidity. In highly filtered samples, which scatter little light, the dark current can be a substantial amount of the signal generated by the detector.

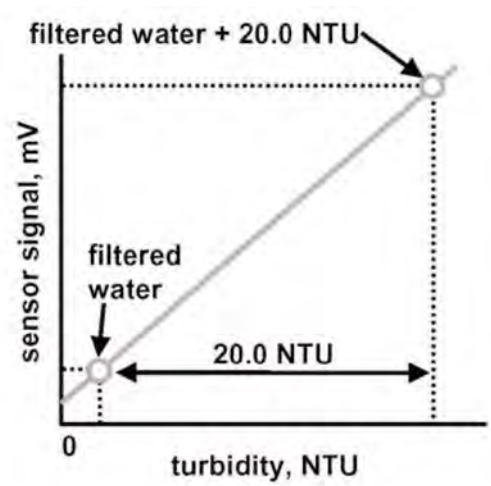

This screen appears after selecting Slope calibration.

```
S1: 1.234µS/cm    25.0ºC
S2: 12.34pH       25.0ºC
      SN Slope Cal
Sensor in pure H2O?
Press ENTER
```

The following screen will appear if Slope Cal is successful. The screen will return to the Turbidity Cal Menu.

```
S1: 1.234µS/cm    25.0ºC
S2: 12.34pH       25.0ºC
      SN Slope Cal
Cal Complete
```

The following screen may appear if Slope Cal is unsuccessful.

```
S1: 1.234µS/cm    25.0ºC
S2: 12.34pH       25.0ºC
      SN Slope Cal
Calibration
Error

Press EXIT
```

7.10.3 STANDARDIZE CALIBRATION - Turbidity
The turbidity sensor can also be calibrated against a commercial standard. Stable 20.0 NTU standards are available from a number of sources. Calibration using a commercial standard is simple. Filtered deionized water is not required. Before beginning the calibration, the analyzer does a dark current measurement. Dark current is the signal generated by the detector even when no light is falling on it. The analyzer subtracts the dark current from the raw scattered light signal and converts the result to turbidity. In highly filtered samples, which scatter little light, the dark current can be a substantial amount of the signal generated by the sensor.

This screen appears after selecting **Standard calibration.**

```
S1: 1.234µS/cm    25.0ºC
S2: 12.34pH       25.0ºC
     SN Standard Cal
Sensor in Standard?
Press ENTER
```

The following screen will appear if Standard Cal is successful. The screen will return to the Turbidity Cal Menu.

```
S1: 1.234µS/cm    25.0ºC
S2: 12.34pH       25.0ºC
     SN Standard Cal
Cal Complete
```

The following screen may appear if Standard Cal is unsuccessful.

```
S1: 1.234µS/cm    25.0ºC
S2: 12.34pH       25.0ºC
     SN Standard Cal
Calibration
Error

Press EXIT
```

7.10.4 GRAB CALIBRATION - Turbidity

If desired, the turbidity sensor can be calibrated against the turbidity reading from another instrument. The analyzer treats the value entered by the user as though it were the true turbidity of the sample. Therefore, grab sample calibration changes the sensitivity, it does not apply an offset to the reading.

This screen appears after selecting **Grab calibration.**

```
S1: 1.234µS/cm   25.0ºC
S2: 12.34pH      25.0ºC
      SN Grab Cal
Wait for stable
reading
```

The following screen will appear if Grab Cal is successful. The screen will return to the Turbidity Cal Menu.

```
S1: 1.234µS/cm   25.0ºC
S2: 12.34pH      25.0ºC
      SN Grab Cal
Cal Complete
```

The following screen may appear if Grab Cal is unsuccessful.

```
S1: 1.234µS/cm   25.0ºC
S2: 12.34pH      25.0ºC
      SN Grab Cal
Calibration
Error

Press EXIT
```

7.11 PULSE FLOW

7.11.1 DESCRIPTION

A variety of pulse flow sensors can be wired to the Flow signal input board to measure flow volume, total volume and flow difference (if 2 Flow signal boards are installed). The Model 1056 Flow signal board will support flow sensors that are self-driven (powered by the rotation of the impeller paddle-wheel).

THIS SECTION DESCRIBES HOW TO CALIBRATE THE MODEL 1056 WITH AN ATTACHED FLOW SENSOR. THE FOLLOWING CALIBRATION ROUTINES ARE COVERED.

TABLE 7-13 FLOW CALIBRATION ROUTINES

Measure	Sec.	Calibration function	Description
Pulse Flow	7.11.2	K Factor	A constant value representing pulses/Gal of flow
	7.11.3	Frequency/Velocity & Pipe	Alternate cal method – requires manual entry of frequency (Hz) per velocity and Pipe diameter used
	7.11.4	In process Calibration	Calibration based on known volume per unit of time
	7.11.5	Totalizer Control	User settings to stop, restart and reset total volume meter

A detailed flow diagram is provided at the end of Sec. 7 to guide you through the calibration routines.

To calibrate Pulse Flow:

1. Press the **MENU** button
2. Select **Calibrate.** Press ENTER.
3. Select **Sensor 1** or **Sensor 2** corresponding to Flow. Press ENTER.
4. Select **Pulse Flow.** Press ENTER.

```
S1: 1.234µS/cm   25.0ºC
S2: 12.34pH      25.0ºC
     SN Calibrate?
Pulse Flow
```

The following screen will appear.

To calibrate Pulse Flow scroll to the desired item and press ENTER.

The following sub-sections provide you with the initial display screen that appears for each calibration routine. Use the **diagram for Pulse Flow calibration** at the end of Sec. 7 and the live screen prompts to complete calibration.

.

```
S1: 1.234µS/cm   25.0ºC
S2: 12.34pH      25.0ºC
     SN Calibration
K Factor: 12.34 p/Gal
Freq/Velocity & Pipe
In Process
Totalizer Control
```

7.11.2 CALIBRATION — K Factor
This screen appears after selecting **K Factor.**

.

```
S1: 1.234µS/cm   25.0ºC
S2: 12.34pH      25.0ºC
     SN K Factor
12.34 p/Gal
```

To calibrate Pulse Flow scroll to the desired item and press ENTER.

The following sub-sections provide you with the initial display screen that appears for each calibration routine. Use the **diagram for Pulse Flow calibration** at the end of Sec. 7 and the live screen prompts to complete calibration.

.

```
S1: 1.234µS/cm   25.0ºC
S2: 12.34pH      25.0ºC
     SN Calibration
K Factor: 12.34 p/Gal
Freq/Velocity & Pipe
In Process
Totalizer Control
```

Simply enter the know K factor provided with the flow sensor specifications. The screen will return to the Pulse Flow Cal Menu and the updated K factor will appear.

7.11.3 CALIBRATION — Freq/Velocity & Pipe
This screen appears after selecting **Freq/Velocity & Pipe calibration.**

```
S1: 1.234µS/cm   25.0ºC
S2: 12.34pH      25.0ºC
    SN Freq/Velocity
12.34 Hz per ft/sec
```

After completing the entry of the Freq/Velocity ratio, the following screen will appear:

```
S1: 1.234µS/cm   25.0ºC
S2: 12.34pH      25.0ºC
   SN Pipe Diameter
10.00 in
```

The following screen will appear if the entries are successful. The screen will return to the Pulse Flow Cal Menu.

```
S1: 1.234µS/cm   25.0ºC
S2: 12.34pH      25.0ºC
SN Freq/Velocity&Pipe
Updated  K Factor
12.34 p/Gal
```

The following screen may appear if the entries are unsuccessful.

```
S1: 1.234µS/cm    25.0ºC
S2: 12.34pH       25.0ºC
SN Freq/Velocity&Pipe
Calibration
Error

Press EXIT
```

7.11.4 CALIBRATION — In Process Cal

This screen appears after selecting **In Process Cal.**

```
S1: 1.234µS/cm    25.0ºC
S2: 12.34pH       25.0ºC
   SN InProcess Cal
Updated  K Factor
12.34 p/Gal
```

The following screen will appear if the entries are successful. The screen will return to the Pulse Flow Cal Menu.

The following screen will appear if the entries are successful.

```
S1: 1.234µS/cm    25.0ºC
S2: 12.34pH       25.0ºC
   SN InProcess Cal
Calibration
Error

Press EXIT
```

7.11.5 CALIBRATION — Totalizer Control

This screen appears after selecting **Totalizer Control.**

```
S1: 1.234µS/cm    25.0ºC
S2: 12.34pH       25.0ºC
  SN Totalizer Control
Stop
Resume
Reset
123456789012.3 G
```

The user can suspend the totalizer by selecting Stop, re-enable the totalizer by selecting Resume and return the totalizer volume count to zero by selecting Reset. The live totalizer volume count is displayed during these menu operations.

FIGURE 7-1 Calibrate pH

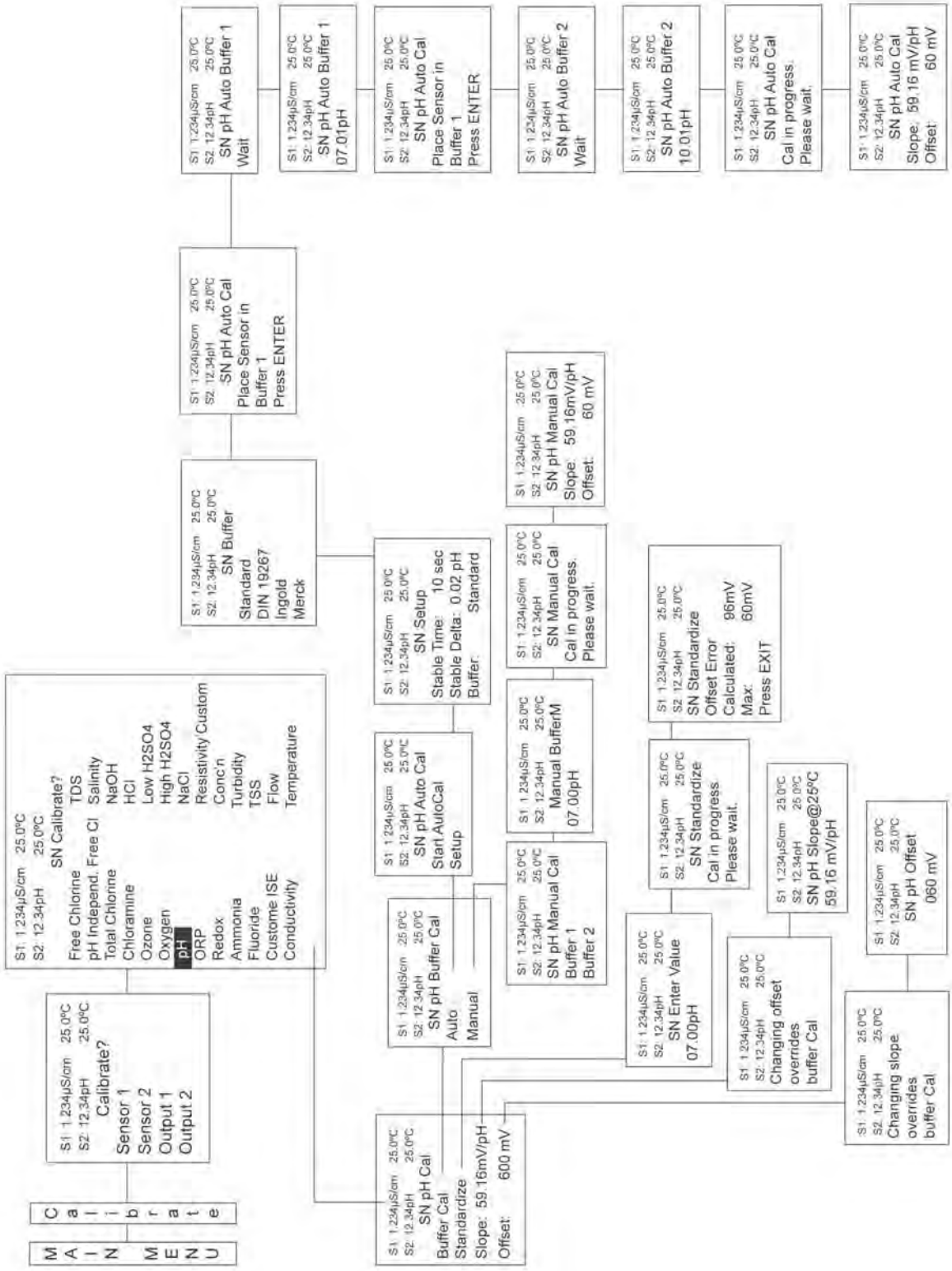

FIGURE 7-2 Calibrate ORP

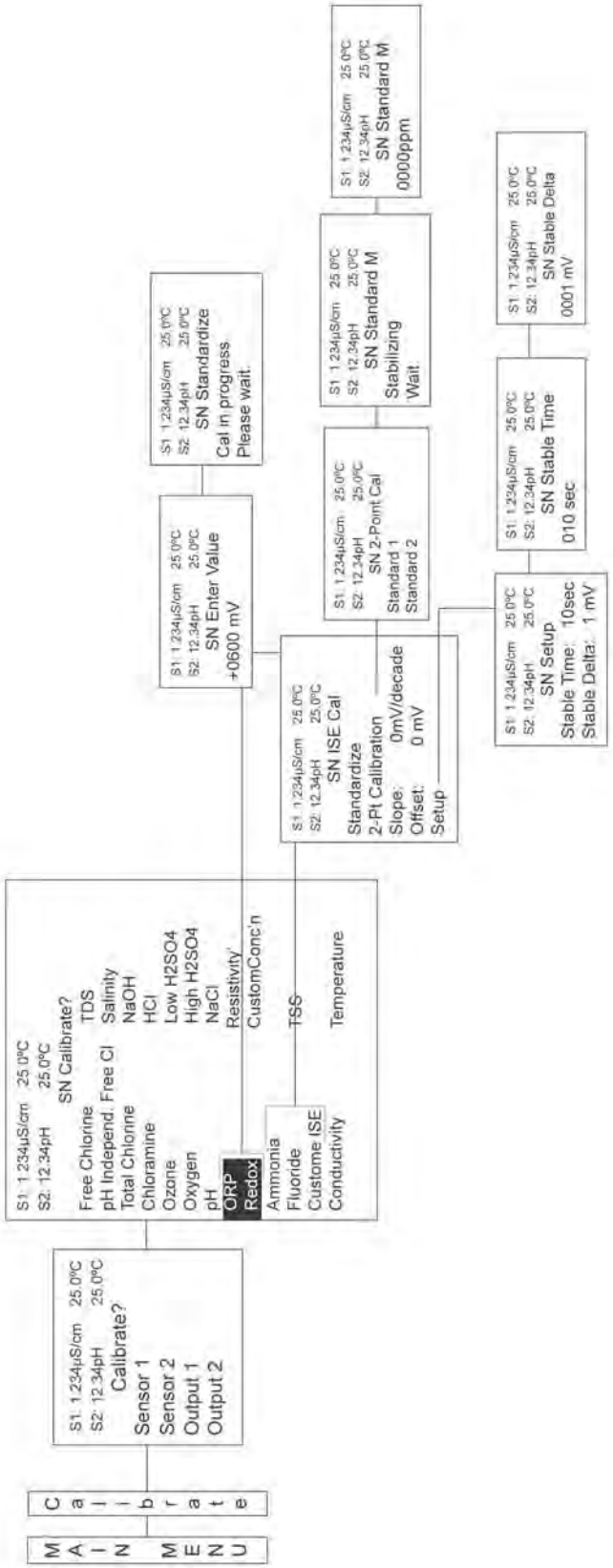

FIGURE 7-3 Calibrate Contacting and Toroidal Conductivity

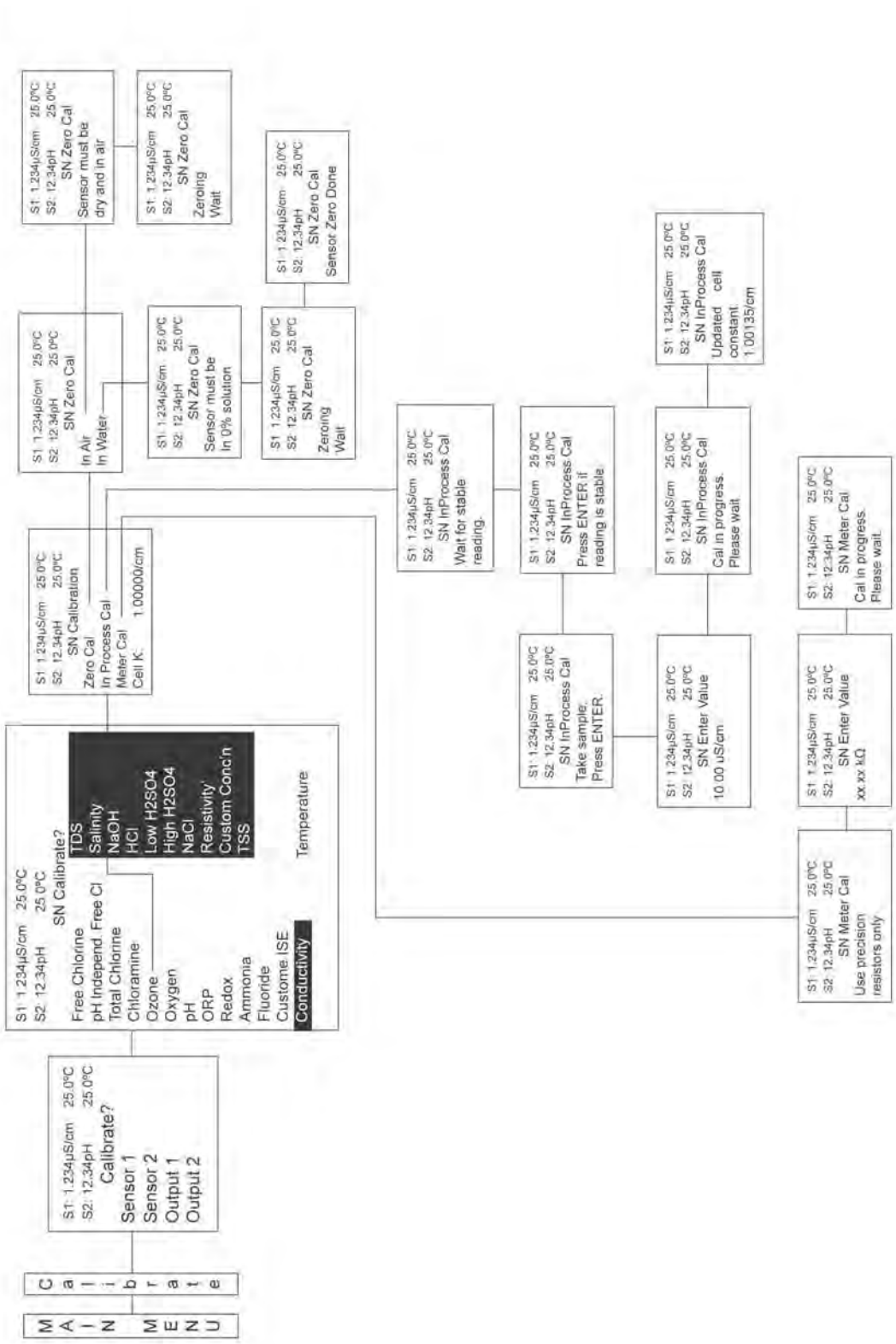

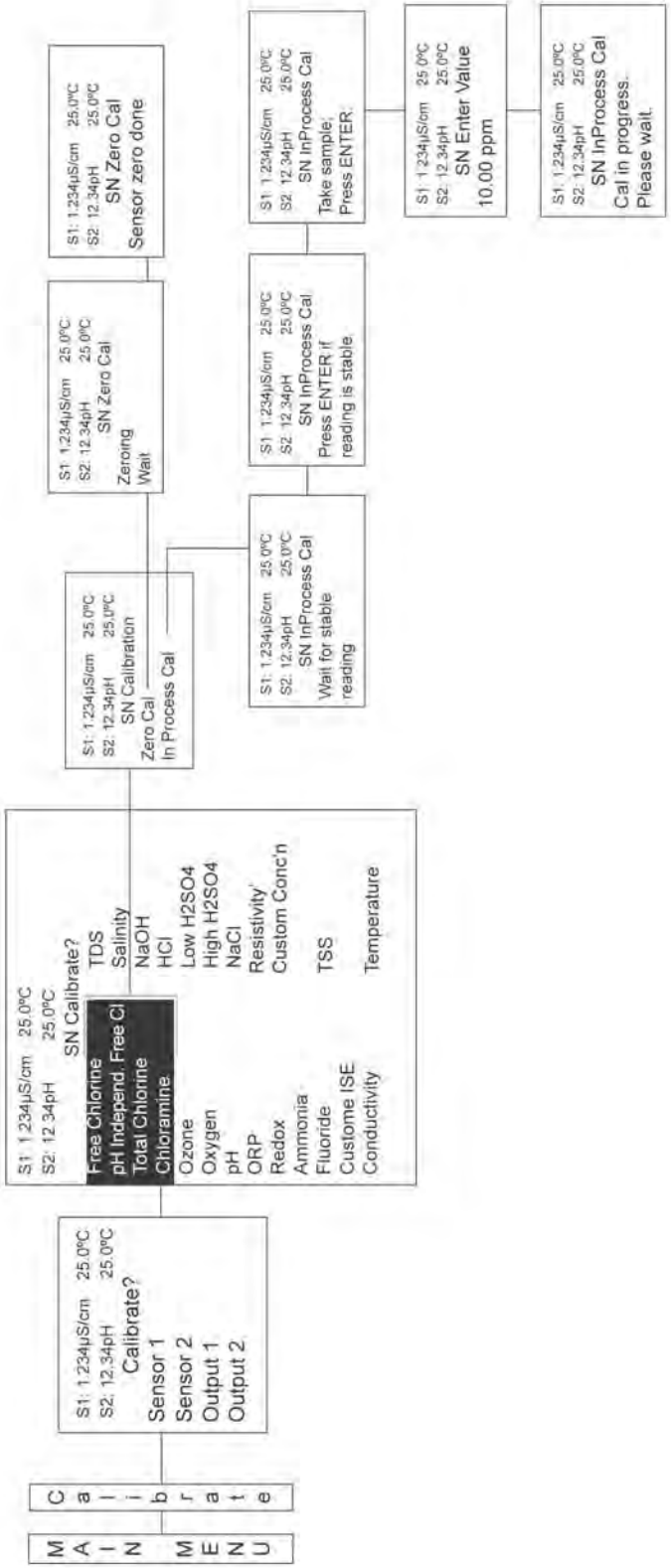

FIGURE 7-4 Calibrate Free Chlorine, Total Chlorine, Monochloramine, and pH-independent Free Chlorine

FIGURE 7-5 Calibrate Oxygen

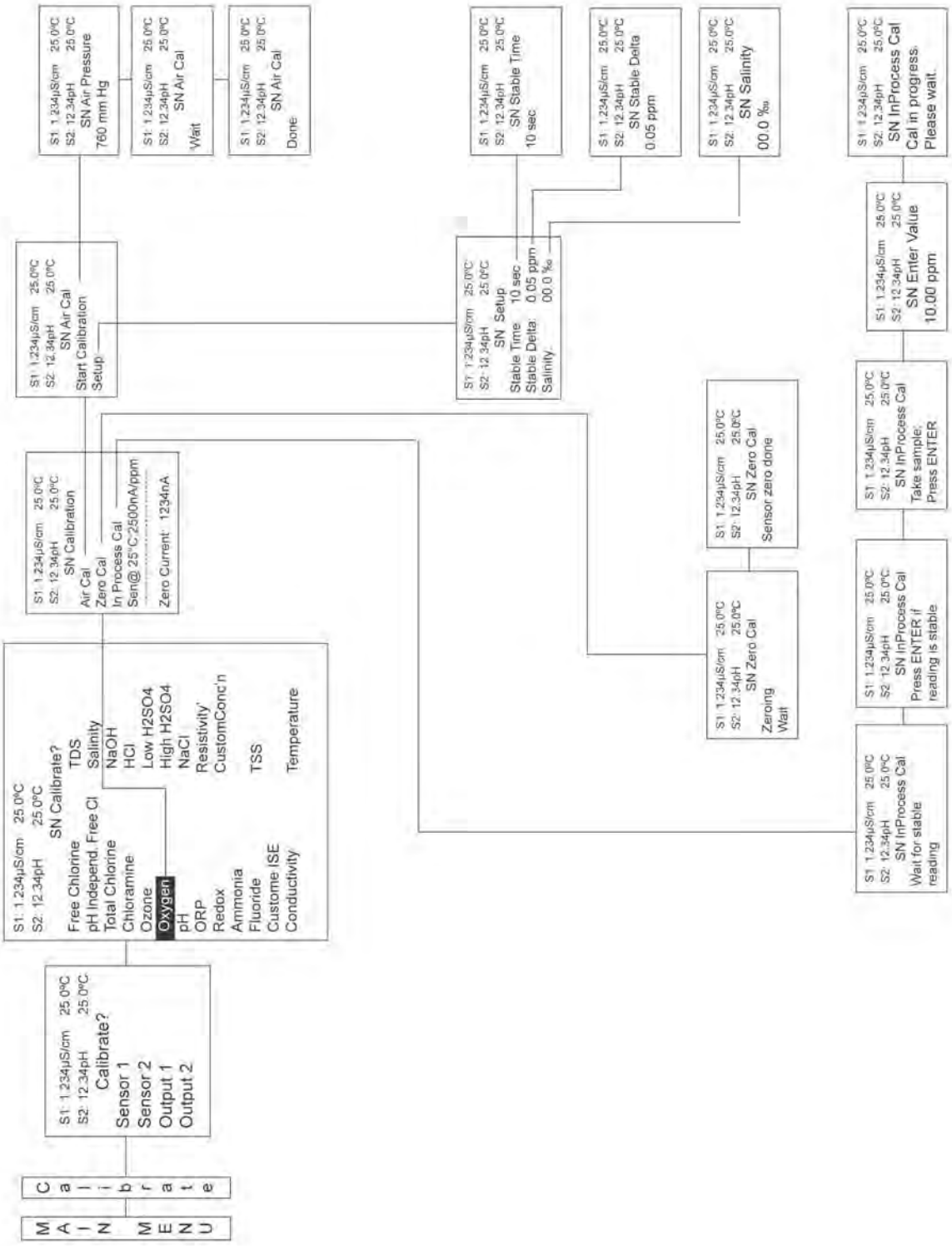

FIGURE 7-6 Calibrate Ozone

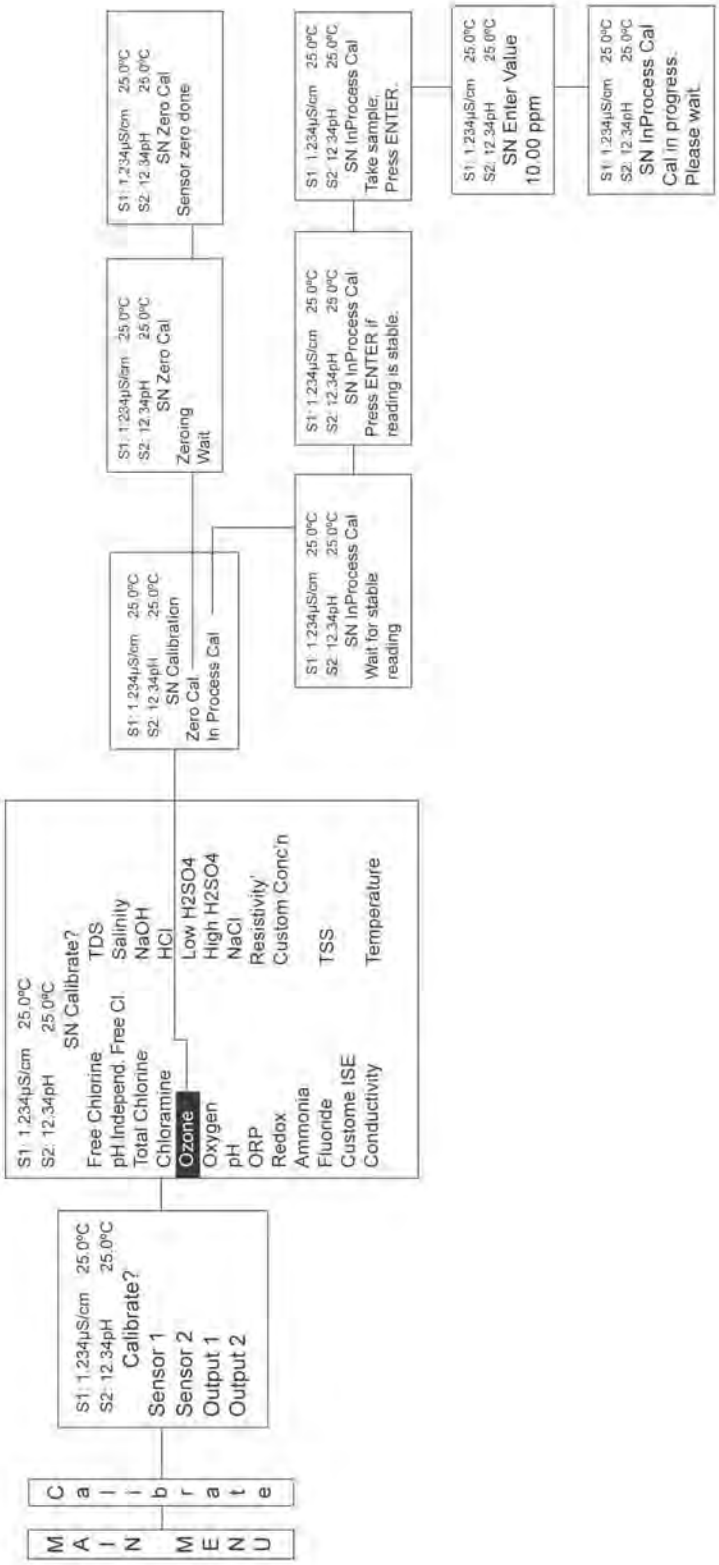

FIGURE 7-7 Calibrate Temperature

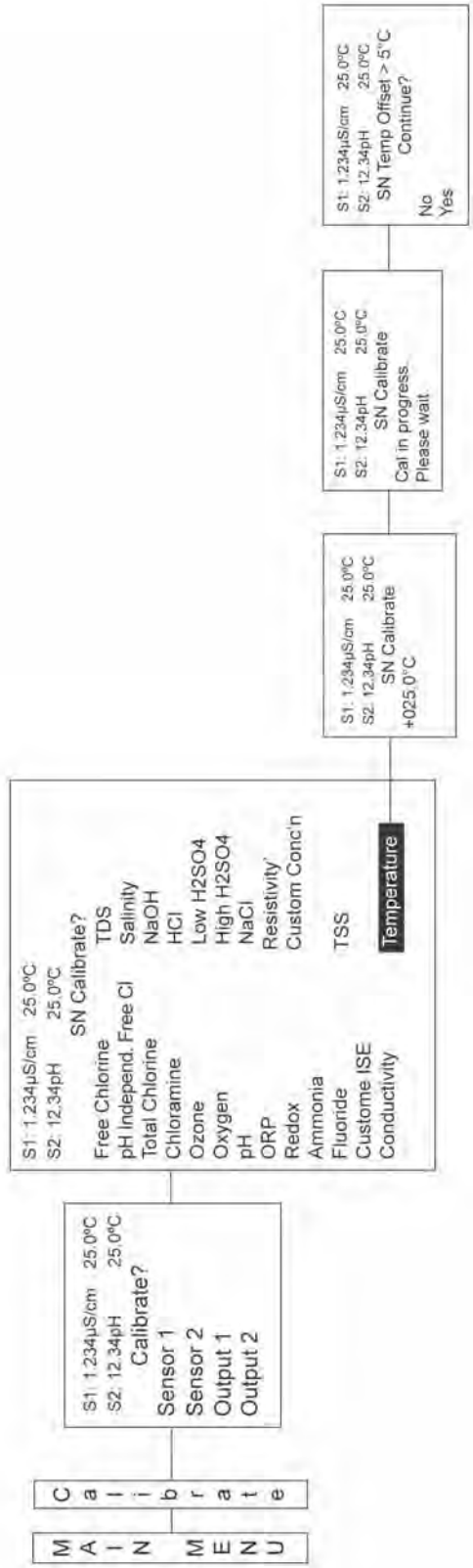

FIGURE 7-8 Calibrate Turbidity

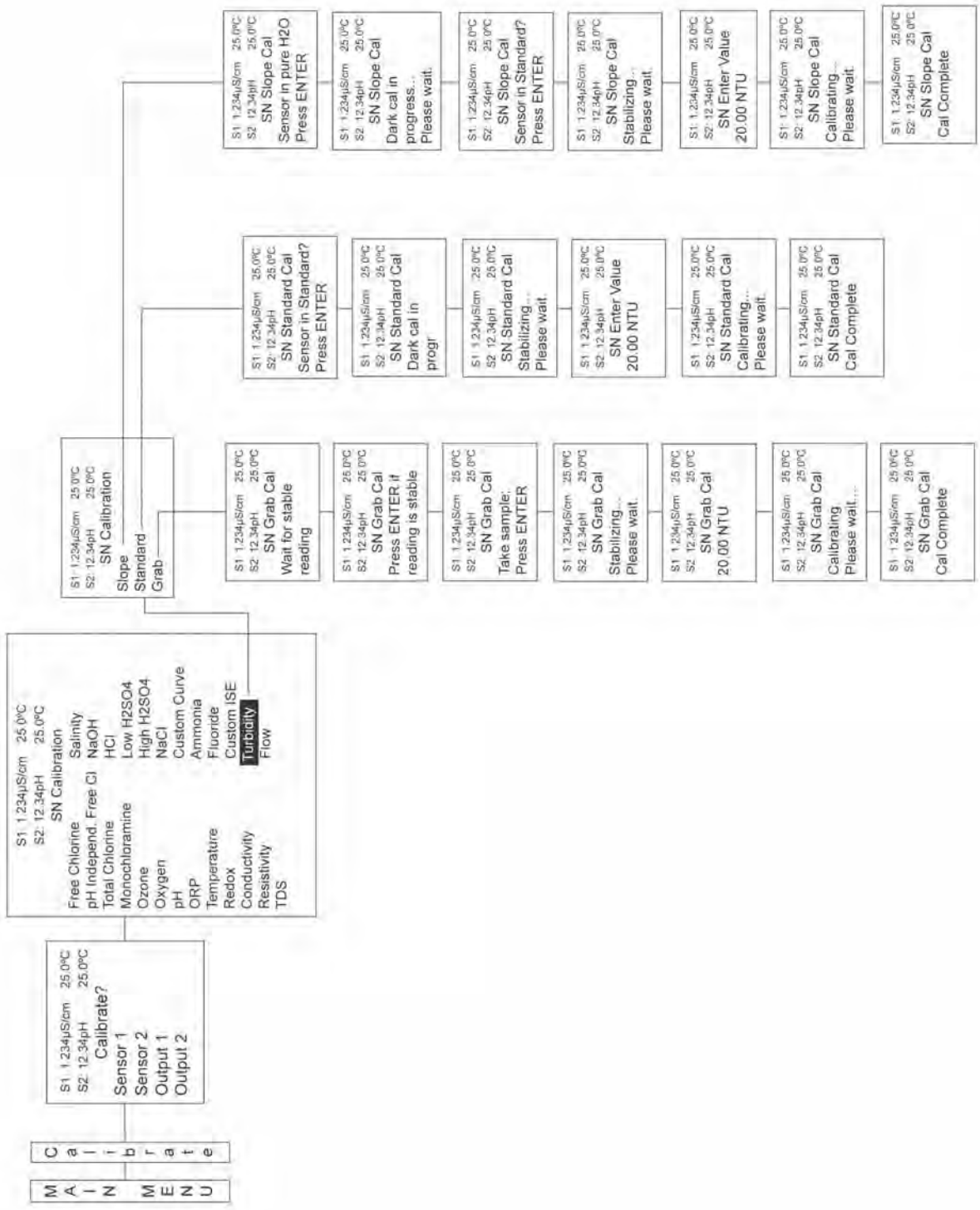

FIGURE 7-9 Calibrate Flow

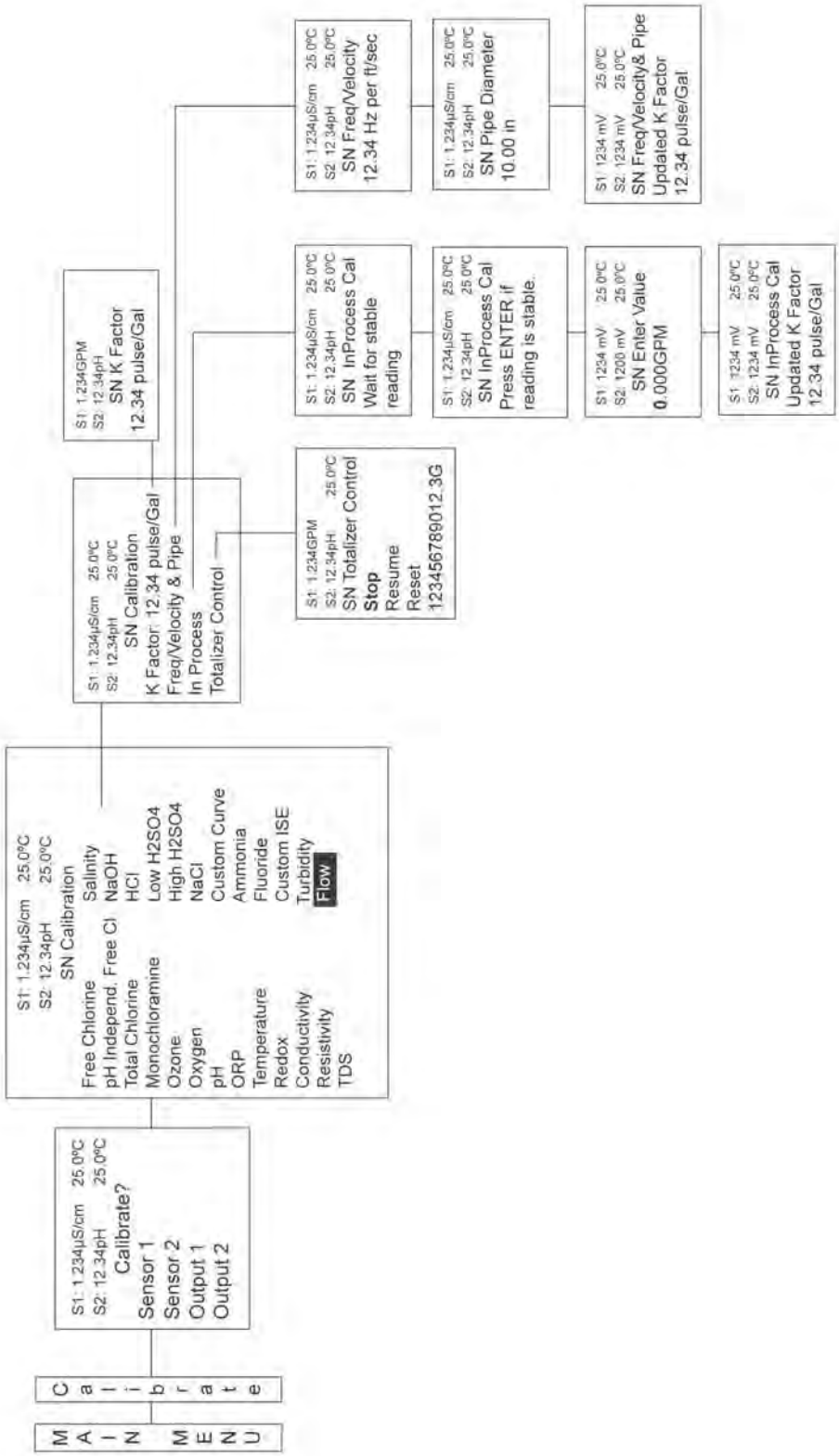

SECTION 8.0
RETURN OF MATERIAL

17.1 GENERAL.

To expedite the repair and return of instruments, proper communication between the customer and the factory is important. Before returning a product for repair, call 1-949-757-8500 for a Return Materials Authorization (RMA) number.

17.2 WARRANTY REPAIR.

The following is the procedure for returning instruments still under warranty:

1. Call Rosemount Analytical for authorization.
2. To verify warranty, supply the factory sales order number or the original purchase order number. In the case of individual parts or sub-assemblies, the serial number on the unit must be supplied.
3. Carefully package the materials and enclose your “Letter of Transmittal” (see Warranty). If possible, pack the materials in the same manner as they were received.
4. Send the package prepaid to:

   Rosemount Analytical
   Liquid Division
   2400 Barranca Parkway
   Irvine, CA 92606

   Attn: Factory Repair

   RMA No. _____

   Mark the package: Returned for Repair

   Model No. ____

IMPORTANT

Please see second section of “Return of Materials Request” form. Compliance with the OSHA requirements is mandatory for the safety of all personnel. MSDS forms and a certification that the instruments have been disinfected or detoxified are required.

17.3 NON-WARRANTY REPAIR.

The following is the procedure for returning for repair instruments that are no longer under warranty:

1. Call Rosemount Analytical for authorization.
2. Supply the purchase order number, and make sure to provide the name and telephone number of the individual to be contacted should additional information be needed.
3. Do Steps 3 and 4 of Section 17.2.

NOTE

Consult the factory for additional information regarding service or repair.

The right people, the right answers, right now.

Immediate, Reliable Analytical Support

Now there's a way to quickly get the right answers for your liquid analytical instrumentation questions: the Analytical Customer Support Center.

Our staff of trained professionals is ready to provide the information you need. If you are placing an order, verifying delivery, requesting application information, or just want to contact a Rosemount Analytical representative, a call to the Customer Support Center will provide you with the right people, the right answers, right now.

A Worldwide Network of Sales and Service

Emerson Process Management's field sales offices are your source for more information on the fill line of Rosemount Analytical products. Field sales personnel will work closely with you to supply technical data and application information.

For more information, please contact your nearest Emerson Process Management sales office.

THE AMERICAS - HEADQUARTERS

Rosemount Analytical Inc.
Liquid Division
2400 Barranca Parkway
Irvine, CA 92606
Phone: 949-757-8500
Toll Free: 800-854-8257
Fax: 949-474-7250

ASIA-PACIFIC

Fisher-Rosemount
Singapore Private Ltd.
1 Pandan Crescent
Singapore 0512
Republic of Singapore
Phone: 65-777-8211
Fax: 65-777-0947

EUROPE, MIDDLE EAST, AND AFRICA

Fisher-Rosemount Ltd.
Heath Place
Bognor Regis
West Sussex PO22 9SH
England
Phone: 44-1243-863121
Fax: 44-1243-845354

ADDITIONAL SALES OFFICES IN:

Argentina	India	Romania
Australia	Indonesia	Russia
Austria	Ireland	Saudi Arabia
Azerbajan	Israel	Singapore
Bahrain	Italy	Slovak Republic
Belgium	Jamaica	South Africa
Bolivia	Japan	Spain
Brazil	Jordan	Sweden
Brunei	Kazakhstan	Switzerland
Bulgaria	Korea	Syria
Canada	Kuwait	Taiwan
Chile	Malaysia	Thailand
China	Mexico	Tobago
Colombia	Netherlands	Trinidad
Costa Rica	New Zealand	Tunisia
Croatia	Nigeria	Turkey
Czech Republic	Norway	Ukraine
Denmark	Oman	United Arab Emirates
Egypt	Pakistan	United Kingdom
Ecuador	Paraguay	Uruguay
Finland	Peru	Uzbekistan
France	Philippines	Venezuela
Germany	Poland	Yemen
Greece	Portugal	
Hong Kong	Puerto Rico	
Hungary	Qatar	

VISIT OUR WEBSITE AT
www.RAIhome.com

EMERSON
Process Management

The right people,
the right answers,
right now.

ROSEMOUNT ANALYTICAL
CUSTOMER SUPPORT CENTER
1-800-854-8257

ON-LINE ORDERING NOW AVAILABLE ON OUR WEB SITE
http://www.raihome.com

Credit Cards for U.S. Purchases Only.

Emerson Process Management

2400 Barranca Parkway
Irvine, CA 92606 USA
Tel: (949) 757-8500
Fax: (949) 474-7250

http://www.raihome.com

© Rosemount Analytical Inc. 2010

EMERSON
Process Management

Temperature Sensors and Accessories (English)

- *Standard Immersion Sensors*
- *Available with Many Standard Process Connections*
- *Calibration Capabilities*

Content

Introduction . . . . . page 2
Threaded Mount Sensors and Assemblies . . . . . page 10
Ordering Tables
Series 68 RTD Sensor Assemblies WITHOUT Thermowell. . . . . page 13
Series 68 RTD Sensor Assemblies WITH Thermowell. . . . . page 17
Series 78 RTD Sensor Assemblies WITHOUT Thermowell. . . . . page 25
Series 78 RTD Sensor Assemblies WITH Thermowell. . . . . page 29
Series 68Q Sanitary Platinum RTD Sensor Assemblies . . . . . page 37
Series 58C Cut-to-Fit RTD Sensors. . . . . page 40
Series 183 Thermocouple Sensor Assemblies WITHOUT Thermowell. . . . . page 42
Series 183 Thermocouple Sensor Assemblies WITH Thermowell . . . . . page 45
Calibration . . . . . page 51
Mounting Accessories . . . . . page 63
Ordering Tables
Connection Head Model Numbers . . . . . page 64
Extension . . . . . page 65
Compression Fittings, 316 SST . . . . . page 66
Series 91 Thermowell . . . . . page 71
Hazardous Area Approvals . . . . . page 82

Introduction

OVERVIEW

Emerson Process Management offers a wide variety of RTD and thermocouple sensors that are available alone or as complete assemblies including connection heads, thermowells, and extension fittings. In addition to complete assemblies, Emerson Process Management offers heads, coupling/nipple and union/nipple extensions, compression fittings, and thermowells.

Using this Product Data Sheet (PDS)

Use this PDS to order complete temperature sensor assemblies, which include sensors, thermowells, extensions, and connection heads. These options can also be ordered separately. For example, you can order a thermowell, extension, or connection head for use with an existing sensor. In each case it is important to know and understand the sections of this PDS when specifying the items.

Threaded Sensors and Assemblies

- Includes descriptions, specifications, and ordering information for Series 58C, 68, 68Q, and 78 RTDs, and the Series 183 thermocouples.
- Includes information for ordering sensors, connection heads, extensions, and thermowells as complete assemblies.

Calibration

- Includes characterization schedules and information for ordering calibrated Series 68, 68Q, and 78 RTD Sensors.
- Includes information regarding the use of Callendar-Van Dusen constants to match specific Series 68, 68Q, and 78 RTDs to Rosemount Smart Temperature Transmitters.

Mounting Accessories

- Includes descriptions, specifications, and ordering information for temperature accessories such as thermowells, extensions, connection heads, mounting adapters, lead wire extensions, connectors, seals, and thermowells.

Hazardous Area Approvals

- Includes descriptions of the FM, CSA, SAA, and ATEX approvals for sensors and connection heads.

Configuration Data Sheet

- Provides a form used for thermowell application calculations.

Series 58C, 68, 68Q, and 78 platinum RTD temperature sensors are primarily used when high accuracy, durability, and long-term stability are required. These sensors conform to international standards: IEC-751, EN 60751, and BS EN 60751.(1)

Series 58C platinum RTD temperature sensors:

- Combine an economical thin-film design with a sheath that can be shortened to any length with tubing cutter.

Series 68Q Quick Response Sanitary RTD sensors:

- Conform to 3–A Sanitary Standards and feature product contact surfaces designed for CIP cleaning.

Series 68 platinum RTD temperature sensors:

- Provide high performance in an economical thin-film design.

Series 78 platinum RTDs temperature sensors:

- Use a wire-wound element which allows for a broader measurement range.

Thermocouples

Series 183 thermocouple temperature sensors conform to ASTM E-230, and are available in types J, K, E, and T.

Series 183 thermocouple temperature sensors are available:

- grounded or ungrounded
- isolated or unisolated
- with immersion lengths from 2 to 48 inches.

(1) 100 ohms at 0 °C, α = 0.00385 ohms/ohm/°C

The Use of 2-, 3-, and 4- wire RTDs

To help you attain the highest possible temperature measurement accuracy, Rosemount provides 4-wire sensors for all single element RTDs. You can use these RTDs in 2-, 3-, or 4-wire configurations by simply securing the unneeded leads with tape. To properly wire the 4-wire RTD for use in a 2-, 3-, or 4-wire configuration, refer to the following wiring diagrams:

2-wire Configuration

2-wire RTDs provide one connection to each end of the sensor. In a 2-wire configuration, lead wires add resistance to the circuit which cannot be compensated. The 2-wire configuration is rarely used because the added lead wire resistance can cause substantial errors in the temperature reading.

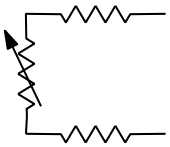

3-wire Configuration

3-wire RTDs provide one connection to one end of the sensor, and two connections to the other end. The 3-wire approach does not eliminate all lead wire effects. However, for sensors with lead wires of the same length, lead wire effects are slight, and the approach provides reasonable accuracy.

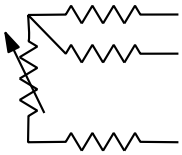

4-wire Configuration

The most effective way to eliminate lead wire effects is with two connections at each end of the sensor. 4-wire RTDs fully compensate for lead wire effects.

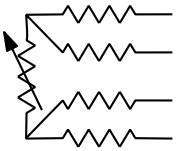

Benefits and Limitations of RTDs when compared to Thermocouples

Benefits:

- Higher accuracy
- Better linearity and long-term stability
- Cold junction compensation not required
- Special extension lead wire not required
- Less susceptible to noise
- Can be “matched” to a Rosemount transmitter with transmitter sensor matching

Limitations

- Lower maximum temperature limit
- Slower response time in applications without a thermowell

HOW TO DECIDE WHAT TO ORDER

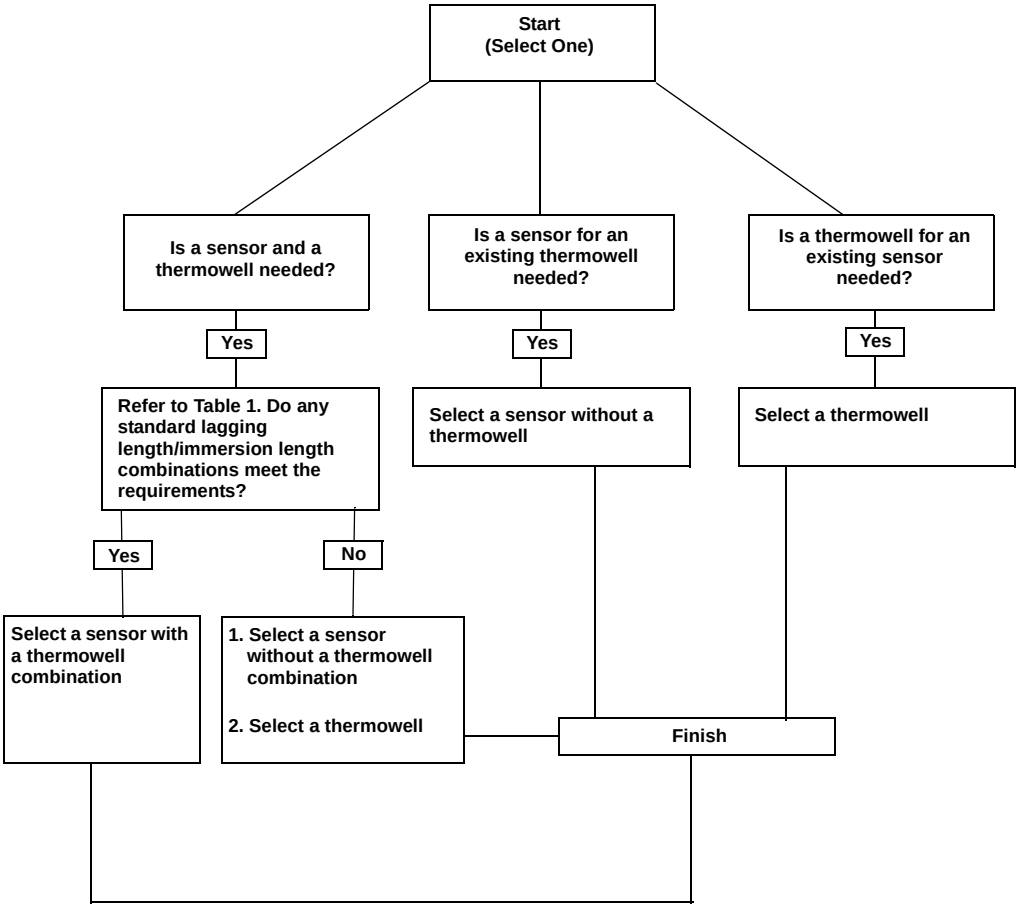

If Rosemount sensor and model code is visible on the Sensor:

1. If the thermowell is ordered separately (0078P23C30**N**060) 11th digit = 'N'
   a. Start with immersion length - digits 12-14; 060 = 6.0 in.
   b. Add extension length - digits 9 & 10; 30 = 3.0 in. (3 + 6 = 9)

Order the replacement sensor for the total length without connection heads (5th digit **N**) and extension (8th digit **N**) 0078N23N00N**090**

2. If the thermowell is ordered integral to sensor (0078P23C**30A060**W40) 11th digit = not 'N'
   a. Immersion length 'U' is defined by the 12-14th digits; 060 = 6.0 in.
   b. Look up 'L' length from the correct order chart for given 'U' length. This will be 4 inches for short sensors, or a whole number divisible by 3 for sensors longer than 4 inches (4, 6, 9, 12, 15, 18... inches);
   'U' 060 = 9 inches 'L'
   c. Add extension length as defined by 9th and 10th digits; 30 = 3.0 in. to the 'L' length found in table.
   (9" + 3" = 12", Length code 120)
   d. This will be the replacement sensor length 'X'.

Order sensor without connection head (5th digit **N**) or extension (8th digit **N**) 0078**N**23**N**00N**120**

If model code is NOT visible on the sensor, follow one of the three instructions below:

1. Measure the inside depth of the thermowell *preferred*
   a. Measure down the inside of the thermowell hole to the top-most face of the extension used, or the thermowell if no extension
   b. This will be the replacement sensor length if depth = 12.0 in., sensor length will be 12 in.

Order sensor without connection heads (5th digit **N**) or extension (8th digit **N**) 0078**N**23**N**00N**120**

2. Measure the overall outside length of the thermowell from end to end.
   a. Measure down the outside of the thermowell from the tip to the end face of the extension if used, or the thermowell if no extension.
   b. Subtract 1/4 in. to account for thickness of the thermowell at the tip.
   c. This will be the replacement sensor length. Overall length = 12.25 in., the replacement will be 12 in.

Order sensor without connection heads (5th digit **N**) or extension (8th digit **N**) 0078**N**23**N**00N**120**

3. Measure the old sensor length from tip to the flat face of the threaded process connection.
   a. Determine if the sensor is spring loaded or general purpose (welded) where the sensor sheath meets the threaded adaptor.
   b. For spring loaded sensors, the measurement of the exposed sheath from tip of the start of the threaded portion will be the same as the replacement sensor length.
      - Normal spring compression for a Rosemount sensor is assumed to be 1/2 in. and the normal thread engagement is also assumed to be 1/2 in.
      - Round to the nearest whole 1/4 in. increment as the spring will make up any small differences
      - Replacement sensor for a spring loaded sensor measuring 6.5 inches will be 6.5 in. length

Order sensor without connection heads (5th digit **N**) or extension (8th digit **N**) 0078N15N00N**065**

   c. For general purpose sensors with the distance from tip to threaded adapter:
      - Add $^1/_4$ in. to allow clearance, preventing bottoming sensor during installation.
      - Add $^1/_2$ in. for the thread engagement of the sensor in the thermowell.
      - The replacement sensor for a general purpose sensor measuring 5.75 in. from the tip to the threaded adaptor is 6.5 in. ($5^3/_4 + {}^1/_4 + {}^1/_2 = 6^1/_2$ in).

Order sensor without connection heads (5th digit **N**) or extension (8th digit **N**) 0078N15N00N**065**

If model code is visible on the thermowell (0091A060W40T015P) follow the instructions below to determine sensor model number:

a. Start with immersion length digits 6-8, 060 = 6.0 in.
b. Add additional lagging length digits 13-15, 015 = 1.5 in.
c. To those lengths add 1.5 in. (this is the additional standard lagging length on all Rosemount thermowells) 1.75 in. minus (0.25 in. thermowell tip thickness) = 1.50 in.
d. 6.0 +1.5 +1.5 = 9 in.

Order replacement sensor 0078N23N00N**090**

SPRING-LOADED SENSOR DIMENSIONS

When a spring-loaded sensor is used properly, the spring should be compressed approximately 1/2-inch. Therefore, all measurements of spring-loaded sensors are made with the spring compressed. If you measure an existing spring-loaded sensor while it is in a relaxed state, you must subtract 1/2-inch to arrive at the installed length (X) that must be ordered. See Figure 1.

FIGURE 1. Spring Loaded Sensors Dimensions

Compressed Spring Loaded Sensor

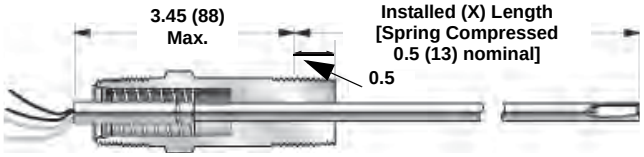

Spring loaded sensor in a compressed state: The actual sensor length is measured when the spring is compressed approximately 1/2-in. shorter than the relaxed sensor.

Relaxed Spring Loaded Sensor

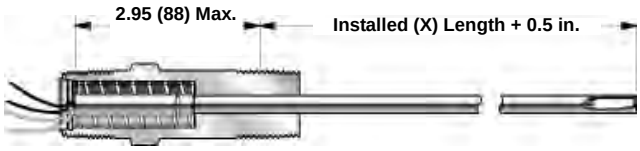

Spring loaded sensor in a relaxed state: Normally, when a spring loaded sensor is measured, it is in a relaxed state. You must subtract 1/2-in. from your measurement to order a replacement sensor. Rosemount Inc. assumes that the sensor length you specify is that of a compressed sensor.

Determining the Length (L) of a spring-loaded sensor to be used with an existing non-Rosemount Thermowell

See Figure 1, Figure 3, and Figure 4.

1. Remove the existing generic sensor from the installed thermowell.
2. Measure the sensor length with the spring in the relaxed state (as shown in Figure 1). Measure from the tip of the sensor to the maximum thread engagement point (0.53 in. into the threads).
3. Subtract 0.5 inches from your measurement. The resulting length is (X).
4. If the sensor is installed with an extension, measure the extension length (E), as shown in Figure 4. If the sensor is not installed with an extension, let (E) = 0.
5. Since (X) = (E) + (L), subtract (E) from (X) to find (L).

Use the resulting length (L) in the Section 2 ordering tables to choose the correct length of sensor.

Length Code Key	
L	Thermowell length minus 0.25 in.
U	Immersion length into process
T	Lagging length
E	Extension fitting length
X	Sensor length

Use the following equations to determine all lengths

L = U + T + 1.5
X = E + L
X = E + U + T + 1.5

FIGURE 2. Thermowell Dimensions (use with Table 1)

Sensor with Thermowell (no extensions)

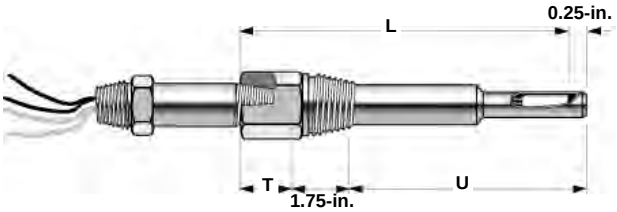

TABLE 1. Dimensions for thermowells when ordered with sensors (U), (L), and (T). Use with Figure 2.

Dimensions (in.)(1)													
Code	**(U)**	**(L)**	**(T)**		**Code**	**(U)**	**(L)**	**(T)**		**Code**	**(U)**	**(L)**	**(T)**
020	2.0	4.0	0.5		090	9.0	12.0	1.5		160	16.0	18.0	0.5
025	2.5	4.0	0.0		095	9.5	12.0	1.0		165	16.5	18.0	0.0
030	3.0	6.0	1.5		100	10.0	12.0	0.5		170	17.0	21.0	2.5
035	3.5	6.0	1.0		105	10.5	12.0	0.0		175	17.5	21.0	2.0
040	4.0	6.0	0.5		110	11.0	15.0	2.5		180	18.0	21.0	1.5
045	4.5	6.0	0.0		115	11.5	15.0	2.0		185	18.5	21.0	1.0
050	5.0	9.0	2.5		120	12.0	15.0	1.5		190	19.0	21.0	0.5
055	5.5	9.0	2.0		125	12.5	15.0	1.0		195	19.5	21.0	0.0
060	6.0	9.0	1.5		130	13.0	15	0.5		200	20.0	24.0	2.5
065	6.5	9.0	1.0		135	13.5	15.0	0.0		205	20.5	24.0	2.0
070	7.0	9.0	0.5		140	14.0	18.0	2.5		210	21.0	24.0	1.5
075	7.5	9.0	0.0		145	14.5	18.0	2.0		215	21.5	24.0	1.0
080	8.0	12.0	2.5		150	15.0	18.0	1.5		220	22.0	24.0	0.5
085	8.5	12.0	2.0		155	15.5	18.0	1.0		225	22.5	24.0	0.0

(1) L = U + T + 1.5

Ordering a Sensor and a Thermowell

See Figure 2 and Table 1 and Figure 3 and Figure 4. Use the following Procedure to determine if a standard lagging length can be use with the sensor and thermowell.

1. Determine the (U), (T), and (E) lengths necessary for your installation.
   If you do not need an extension, (E) = 0 (zero).
   Note: If your existing sensor/thermowell combination is different than Figure 3, refer to the drawings on the following pages.
2. Find your immersion length (U) on Table 1 above and compare the corresponding lagging length (T) to the lagging length that you previously determined.
3. If your lengths match the values on the line that corresponds to your required immersion length, order your sensor and thermowell together.

   If your lengths do not match the values on the line that corresponds to your measured immersion length, order your sensor and thermowell separately. Solve for (L) using the equation (L) = (U) + (T) + 1.5 (since (L) is required when ordering the sensor separately from the thermowell).

Length Code Key

L	Thermowell length minus 0.25 in.
U	Immersion length into process
T	Lagging length
E	Extension fitting length
X	Sensor length

Use the following equations to determine all lengths

L = U + T + 1.5
X = E + L
X = E + U + T + 1.5

FIGURE 3. Series 68, 78, and 183 Sensor Assembly Dimensional Drawings

Capsule Sensor Only

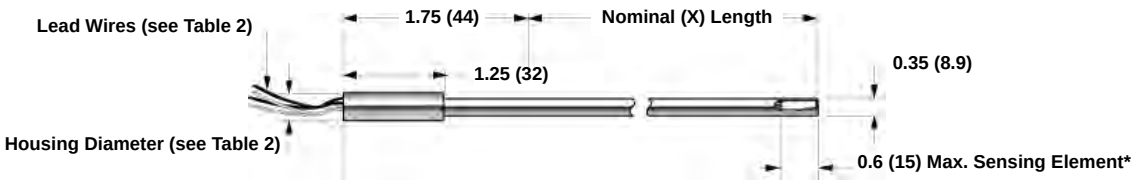

** Maximum sensing element length for Series 78 dual-element = 1-in. (25 mm)*

General Purpose Sensor Assembly

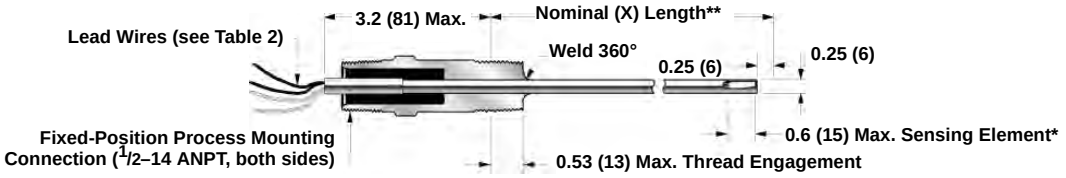

** Maximum sensing element length for Series 78 dual-element = 1-in. (25 mm)*
*** Actual length is 0.25 (6) less to avoid bottoming in thermowell*

Spring Loaded Sensor Assembly

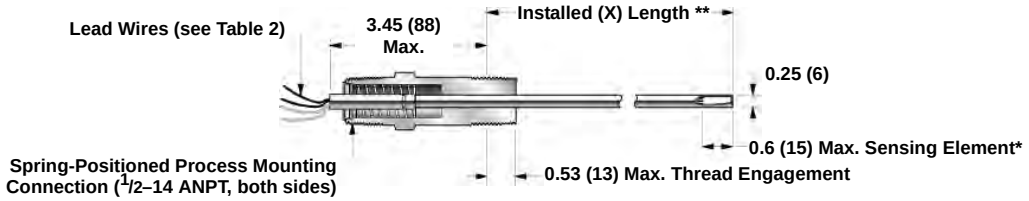

** Maximum sensing element length for Series 78 dual-element = 1-in. (25 mm)*
*** Spring Compressed 0.5 (13)*

Bayonet Spring Loaded Sensor Assembly

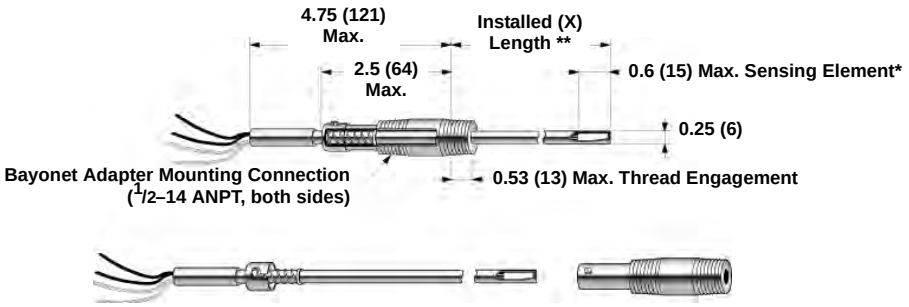

** Spring is shown compressed 0.5 -in.(13 mm.) Do not adjust the equations in Table 2 when calculating X, L, U, and T lengths. The equation already accounts for spring compression.*

Dimensions are in inches (millimeters)

TABLE 2. Sensor Series and Dimensions

Series	Housing Diameter		Lead Wires	Lead Wire Length	
	in	mm		in	mm
68	0.350	8.0	4	6.0	152.4
78 single	0.350	8.0	4	6.0	152.4
78 dual	0.350	8.0	6	6.0	152.4
183 single	0.375	9.53	2	6.0	152.4
183 dual	0.375	9.53	4	12.0	304.8

FIGURE 4. Series 68, 78, and 183 Sensor Assembly Length Code Drawings

Sensor with Thermowell (No Extension)

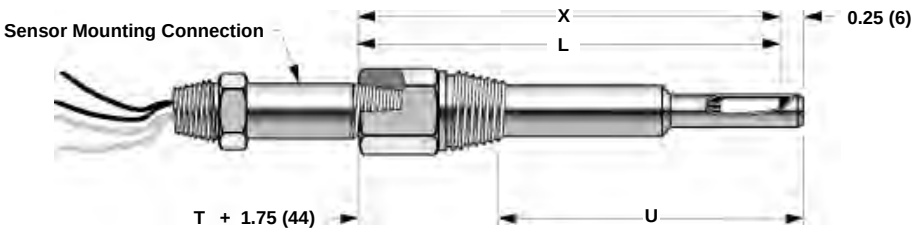

Sensor with Extension (No Thermowell)

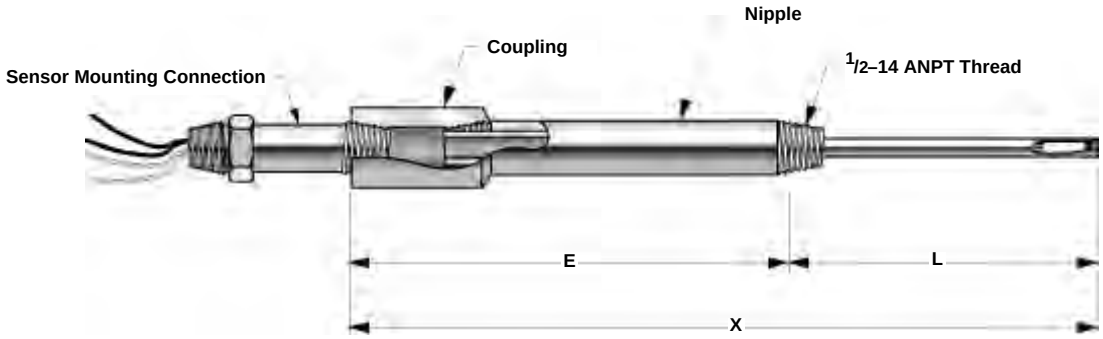

Sensor Installed in Connection Head (Flat Cover) with Union and Nipple Extensions and Thermowell

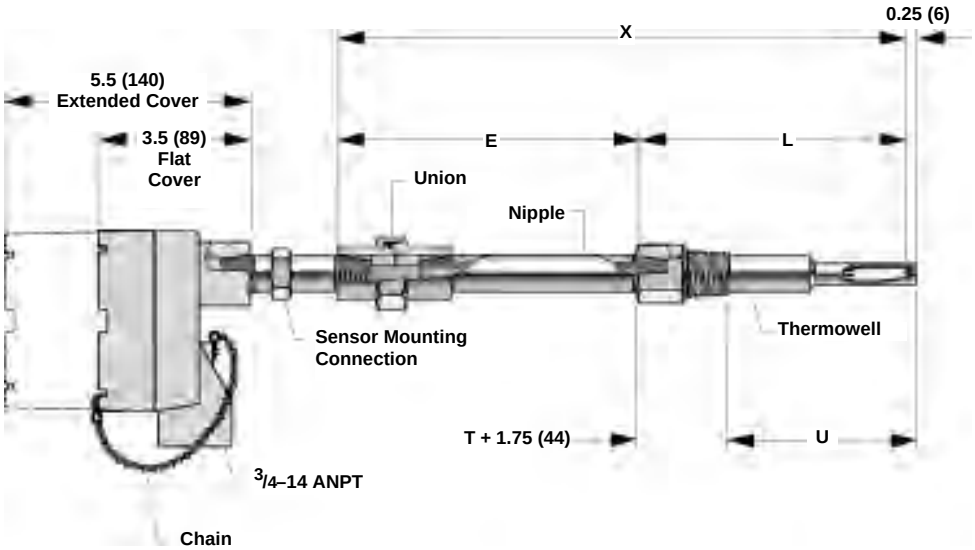

Dimensions are in inches (millimeters)

Threaded Sensors and Assemblies

Series 68, 68Q, and 78 RTD and Series 183 Thermocouple Sensors may be ordered as complete assemblies. These assemblies provide a complete, yet simple means of specifying the proper industrial hardware for most temperature measurements.

One assembly model number, derived from one ordering table, completely defines the type of sensing element, as well as the material, length, and style of both the extension fittings and thermowells. All sensor assemblies are sized and inspected by Rosemount Inc. to ensure complete component compatibility and performance.

FIGURE 5. Individual Components of a Complete Temperature Assembly

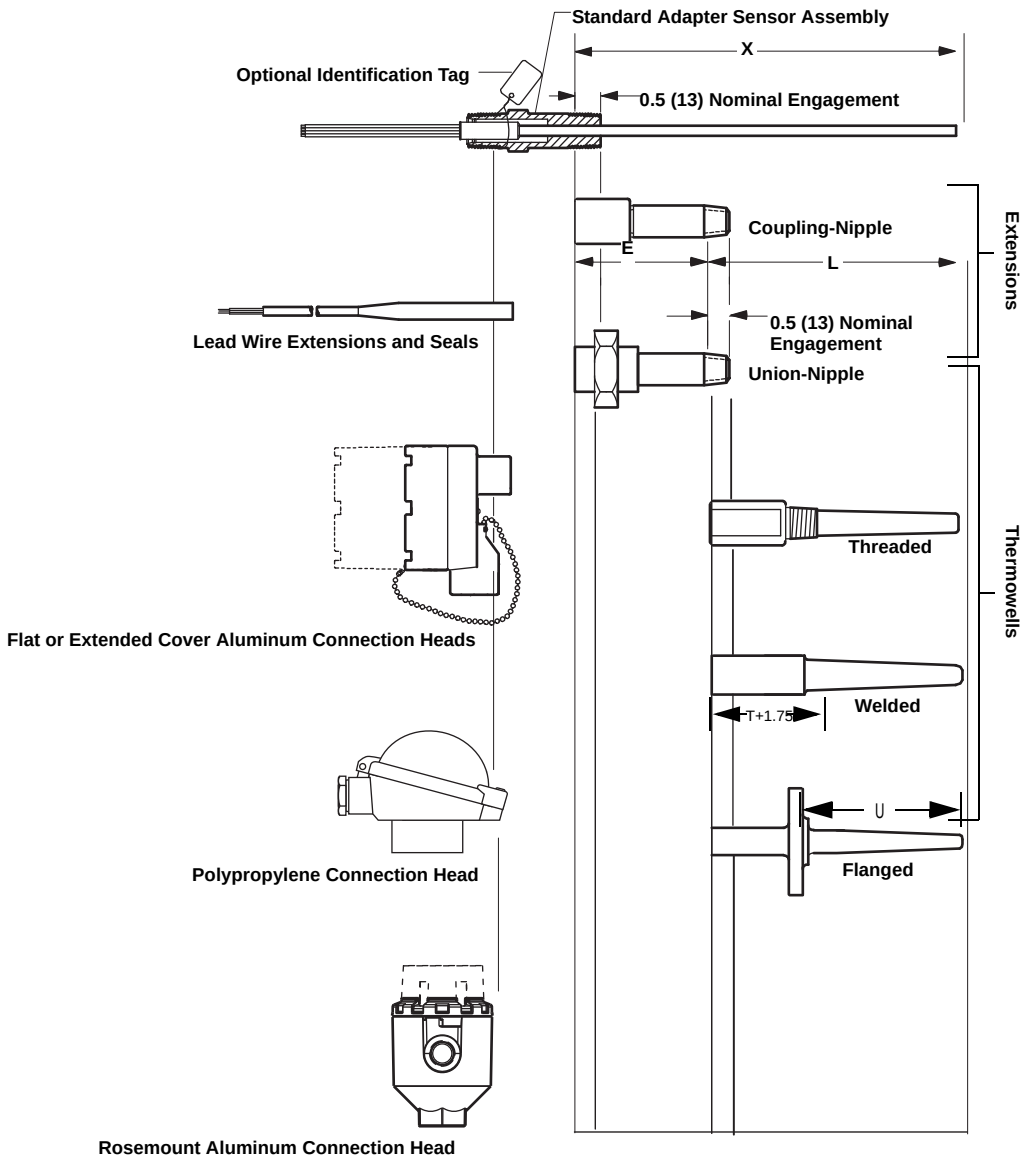

Dimensions are in inches (millimeters)

MOUNTING CONFIGURATIONS

Capsule

Capsules are designed for direct immersion without mounting fittings. Accessory compression fittings are available for adjustable mounting into a thermowell. See Mounting Adapters for Series 58, 68, 78, and 183.

General-Purpose Sensor Assemblies

Designed with a welded, fixed-position 1/2–14 ANPT process connection fitting for direct immersion or thermowell applications, this sensor design provides a moisture-proof and vapor-tight seal. The maximum static working pressure at 20 °C (68 °F) with no vibration or flow condition is 31.59 MPa (3,500 psig). The use of a thermowell is recommended for process pressure containment. Note that standard lengths are 1/4 inch less than nominal dimension to prevent bottoming of the sensor in a thermowell.

Spring-Loaded Sensor Assemblies

Spring-loaded sensors have a spring-positioned, 1/2–14 ANPT process connection fitting that ensures good surface contact in thermowells for faster time response and vibration resistance. Spring-loaded sensors are not intended to provide a process seal. They must be used in conjunction with a thermowell for this purpose.

NOTE
When a spring-loaded sensor is used properly, the spring should be compressed approximately 1/2-inch.

Bayonet Spring-Loaded Sensor Assemblies

Bayonet assemblies have the same advantages as the spring-loaded sensor. However, the bayonet connector permits the sensor to be easily removed from the process without tools.

FIGURE 6. Series 68, 68Q, 78, and 58C Lead Wire Configurations

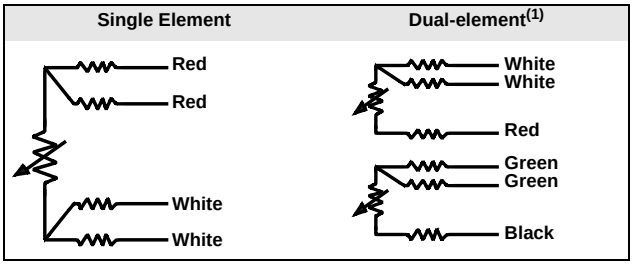

(1) Dual-element sensors are only available on Series 68Q and 78 sensors.

SERIES 68 PLATINUM RTD

Rosemount Series 68 Platinum resistance temperature sensors measure from –50 to 400 °C (–58 to 752 °F). Series 68 Class B, Pt100-385 sensors are available in capsule, general purpose, and spring-loaded designs in sensor lengths from 1 to 48 inches.

Table 3 shows the interchangeability of the Series 68 RTD. As an option, for maximum system accuracy, Rosemount Inc. can provide sensor calibration. See Sensor Characterization (Calibration) Schedules– Option Code V. In addition, Rosemount Inc. offers optional sensor-to-transmitter matching capability obtainable through the use of Callendar-Van Dusen Constants. See Option Code “V” Callendar-van Dusen Constants.

TABLE 3. Series 68 Interchangeability

• ±0.55 °C (±0.99 °F) at -50 °C (-58 °F)
• ±0.30 °C (±0.54 °F) at 0 °C (32 °F)
• ±0.80 °C (±1.44 °F) at 100 °C (212 °F)
• ±1.30 °C (±2.34 °F) at 200 °C (392 °F)
• ±1.60 °C (±2.88 °F) at 260 °C (500 °F)
• ±2.30 °C (±4.14 °F) at 400 °C (752 °F)

Construction

FIGURE 7. Construction of a Platinum Thin Film RTD

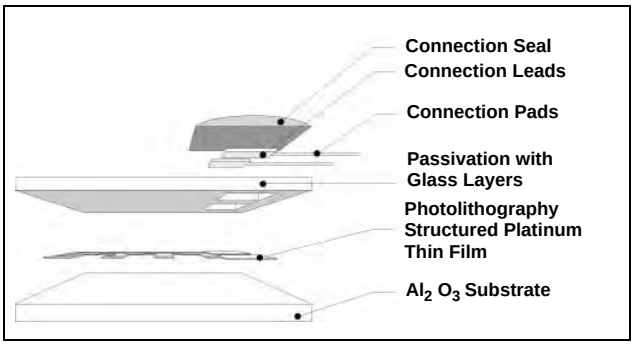

Design and construction of the Series 68 Platinum Sensors provides the optimum combination of accuracy and durability available for temperature measurements. The construction of the sensor allows for direct immersion in non-corrosive fluids at reasonable static pressures. For corrosive environments or many industrial applications, these sensors are widely used with standard thermowell assemblies.

Platinum Element and Lead Wire Configurations

Single-element temperature sensors have four lead wires and may be used in 2-, 3-, and 4-wire signal conditioning systems.

Specifications

Performance

Temperature Range

–50 to 400 °C (–58 to 752 °F)

Effect of Temperature Cycling

±0.05% (0.13 °C or 0.23 °F) maximum ice-point resistance shift following 10 cycles over the specified temperature range.

Stability

±0.11% maximum ice-point resistance shift following 1,000 hours at maximum specified temperature (400 °C).

Maximum Hysteresis

±0.1% of operating temperature range.

Time Constant

12 seconds maximum required to reach 63.2% sensor response in water flowing at 3 ft/s (0.91 m/s).

Nominal R0 100 Ohm

Nominal alpha .00385 C-1

Physical Specifications

Sheath Material

316 SST. / 321 SST.

Lead Wire

PTFE insulated, nickel-coated, 22-gauge stranded copper wire.

Identification Data

The model, serial numbers, and up to six lines of permanent tagging information are etched on each sensor. Stainless steel tags are available upon request.

Weight

- Capsule sensors: 5 oz
- General-purpose and spring-loaded sensors: 9 oz

Environmental

Humidity Limits

- Lead seal can withstanding 100% relative humidity.

Vibration Limits

- ±0.05% maximum ice-point resistance shift due to 30 minutes of 14 g peak vibration from 5 to 350 Hz at 20 °C (68 °F) for unsupported stem length of less than 6 inches.

Quality Assurance

- Each sensor is subjected to a resistance accuracy test at 0 °C and a insulation resistance test.

Enclosure Ratings

- When installed properly, Rosemount Series 68 sensors are suitable for indoor and outdoor NEMA 4X and CSA Enclosure Type 4X installations. See Hazardous Area Approvals for complete installation information.

Insulation Resistance

1000×10^6 ohms minimum insulation resistance when measured at 500 Vdc at room temperature.

ORDERING INFORMATION

TABLE 4. Series 68 RTD Sensor Assemblies WITHOUT Thermowell
★ The Standard offering represents the most common options. The starred options (★) should be selected for best delivery.
The Expanded offering is subject to additional delivery lead time.

Model	Product Description	Available Safety Approvals						
0068	Platinum Temperature Sensor WITHOUT thermowell							
Sensor Lead Wire Termination			**FM**	**ATEX**	**CSA**	**SAA**		
Standard								**Standard**
R	Aluminum Connection Head, Six Terminals, Flat Cover, Unpainted		Y	Y	Y	N		★
T	Aluminum Connection Head, Six Terminals, Extended Cover, Unpainted		Y	Y	Y	N		★
P	Aluminum Connection Head, Six Terminals, Flat Cover, Painted		Y	Y	Y	N		★
L	Aluminum Connection Head, Six Terminals, Extended Cover, Painted		Y	Y	Y	N		★
N	Sensor only with 6-in. Teflon® -insulated, 22-gauge lead wires		Y	Y	Y	N		★
D	Rosemount Aluminum Connection Head with 1/2-in. Entries		Y	Y	Y	Y		★
Expanded								
C	Polypropylene Connection Head		N	N	N	N		
G	Rosemount SST Connection Head with 1/2-in. Entries		Y	Y	Y	Y		
Sensor Type (single element -50 to 400 °C (-58 to 752 °F))								
Standard								**Standard**
01(1)(2)	Capsule Style							★
11(3)	General-purpose style							★
21(4)	Spring-loaded style							★
Expanded								
31(5)	Bayonet spring-loaded style (not available in (X) lengths over 21 inches)							
Extension Type								
Standard								**Standard**
A	Nipple Coupling							★
C	Nipple Union							★
N	None							★
Extension Length (E)								
Standard								**Standard**
00	0.0 in.							★
30	3.0 in.							★
60	6.0 in.							★
Thermowell Material								
Standard								**Standard**
N	No thermowell required							★
Immersion Length (L)								
Standard								**Standard**
010(1)(6)	1.0-in.							★
015	1.5-in.							★
020	2.0-in.							★
025	2.5-in.							★
030	3.0-in.							★
035	3.5-in.							★
040	4.0-in.							★
045	4.5-in.							★
050	5.0-in.							★
055	5.5-in.							★
060	6.0-in.							★
065	6.5-in.							★
070	7.0-in.							★
075	7.5-in.							★
080	8.0-in.							★
085	8.5-in.							★
090	9.0-in.							★

TABLE 4. Series 68 RTD Sensor Assemblies WITHOUT Thermowell
★ The Standard offering represents the most common options. The starred options (★) should be selected for best delivery.
The Expanded offering is subject to additional delivery lead time.

Standard		Standard
095	9.5-in.	★
100	10.0-in.	★
105	10.5-in.	★
110	11.0-in.	★
115	11.5-in.	★
120	12.0-in.	★
125	12.5-in.	★
130	13.0-in.	★
135	13.5-in.	★
140	14.0-in.	★
145	14.5-in.	★
150	15.0-in.	★
155	15.5-in.	★
160	16.0-in.	★
165	16.5-in.	★
170	17.0-in.	★
175	17.5-in.	★
180	18.0-in.	★
185	18.5-in.	★
190	19.0-in.	★
195	19.5-in.	★
200	20.0-in.	★
205	20.5-in.	★
210	21.0-in.	★
210	21.5-in.	★
220	22.0-in.	★
225	22.5-in.	★
230	23.0-in.	★
235	23.5-in.	★
240	24.0-in.	★
245	15.5-in.	★
250	25.0-in.	★
260	26.0-in.	★
270	27.0-in.	★
280	28.0-in.	★
290	29.0-in.	★
300	30.0-in.	★
310	31.0-in.	★
320	32.0-in.	★
330	33.0-in.	★
340	34.0-in.	★
350	35.0-in.	★
360	36.0-in.	★
370	37.0-in.	★
380	38.0-in.	★
390	39.0-in.	★
400	40.0-in.	★
410	41.0-in.	★

TABLE 4. Series 68 RTD Sensor Assemblies WITHOUT Thermowell
★ The Standard offering represents the most common options. The starred options (★) should be selected for best delivery.
The Expanded offering is subject to additional delivery lead time.

Standard		**Standard**
420	42.0-in.	★
430	43.0-in.	★
440	44.0-in.	★
450	45.0-in.	★
460	46.0-in.	★
470	47.0-in.	★
480	48.0-in.	★
OPTIONS		
Approval Options		
Standard		**Standard**
E5	FM Explosion-proof approval (See Figure 26)	★
E6	CSA Explosion-proof approval (See Figure 27)	★
E7(7)	SAA Flameproof approval (See Figure 30)	★
Callendar-Van Dussen Constants		
Standard		**Standard**
V1-V8	V-Callendar-van Dussen Constant (V4 not available with series 68 sensors)	★
Calibration Schedule		
Standard		**Standard**
X8	Customer-Specified Temperature Range Calibration	★
X9	Customer-Specified Single Temperature Point Calibration	★
Calibration Certification		
Standard		**Standard**
Q4	Calibration Certification, Customer-Specified Temperature	★
Mounting Adapters		
Standard		**Standard**
M5-M7	Mounting adapter: Sensor Compression Fitting: M5= 1/8 - 27 NPT, M6 = 1/4 - 18 NPT, M7 = 1/2 - 14 NPT	★
A Leadkit		
Standard		**Standard**
A1-A8	Twisted lead wire extension: A1 = 1.5 ft, A2 = 3.0 ft, A3 = 6.0 ft, A4 = 12 ft, A5 = 24 ft, A6 = 50 ft, A7 = 75 ft, A8 = 100 ft	★
B Leadkit		
Standard		**Standard**
B1-B8(8)	Shielded cable lead wire extension: B1 = 1.5 ft, B2 = 3.0 ft, B3 = 6.0 ft, B4 = 12 ft, B5 = 24 ft, B6 = 50 ft, B7 = 75 ft, B8 = 100 ft	★
C Leadkit		
Standard		**Standard**
C1-C8(8)	Armored cable lead wire extension: C1 = 1.5 ft, C2 = 3.0 ft, C3 = 6.0 ft, C4 = 12 ft, C5 = 24 ft, C6 = 50 ft, C7 = 75 ft, C8 = 100 ft	★
D Leadkit		
Standard		**Standard**
D1-D8(8)	Armored cable lead wire extensions with electrical plug: D1 = 1.5 ft, D2 = 3.0 ft, D3 = 6.0 ft, D4 = 12 ft, D5 = 24 ft, D6 = 50 ft, D7 = 75 ft, D8 = 100 ft	★
L Leadkit		
Standard		**Standard**
L1-L8	Armored cable mating plugs with lead wire extension: L1 = 1.5 ft, L2 = 3.0 ft, L3 = 6.0 ft, L4 = 12 ft, L5 = 24 ft, L6 = 50 ft, L7 = 75 ft, L8 = 100 ft	★
F Leadkit		
Standard		**Standard**
F1	4-pin bayonet connector	★
H Leadkit		
Standard		**Standard**
H1-H8	4-pin connector mating plugs with lead wire extension: H1 = 1.5 ft, H2 = 3.0 ft, H3 = 6.0 ft, H4 = 12 ft, H5 = 24 ft, H6 = 50 ft, H7 = 75 ft, H8 = 100 ft	★
J Leadkit		
Standard		**Standard**
J1	Moisture-proof seal assembly for armored cables	★

TABLE 4. Series 68 RTD Sensor Assemblies WITHOUT Thermowell

★ The Standard offering represents the most common options. The starred options (★) should be selected for best delivery. The Expanded offering is subject to additional delivery lead time.

Assemble to Options		
Standard		**Standard**
XA(9)	Assemble connection head or transmitter to a sensor assembly	★

(1) Capsule style available in 1-in. increments only, starting at 1-in. (i.e. 1, 2, 3-inches, etc.) See "Mounting Adapters for Series 58, 68, 78, and 183" on page 66.

(2) This option must be used with Sensor Lead Wire Termination code N and is not available with assembly code XA or with Approval codes E1, E5, E6, and E7.

(3) General-purpose sensors are only available in (L) lengths of 2.5-in. or greater.

(4) Spring loaded sensors must be installed in a thermowell assembly to meet the requirements of explosion-proof approvals code E6.

(5) Not available with Sensor Lead Wire Termination codes R, P, or C or with approval codes E1, E5, E6, or E7.

(6) 1-in. length without extension is only available in capsule style.

(7) SAA Flame-proof Approval is only applicable if installed with Rosemount 248, 644, or 3144P transmitters.

(8) These options are not available with Sensor Lead Wire Termination codes R, P, or W.

(9) If ordering code XA with a transmitter, specify the same option on the transmitter model code.

Ordering Example

Typical Model Number	Model	Lead Wire Termination	Sensor Type	Extension Type	Extension Length	Thermowell Material	Immersion Length	Additional Options
	0068	N	11	N	00	N	045	E5

ORDERING INFORMATION

TABLE 5. Series 68 RTD Sensor Assemblies WITH Thermowell
★ The Standard offering represents the most common options. The starred options (★) should be selected for best delivery.
The Expanded offering is subject to additional delivery lead time.

Model	Product Description	Available Safety Approvals					
0068	Platinum Temperature Sensors WITH Thermowell						
Sensor Lead Wire Termination			**FM**	**ATEX**	**CSA**	**SAA**	
Standard							**Standard**
R	Aluminum Connection Head, Six Terminals, Flat Cover, Unpainted		Y	Y	Y	N	★
T	Aluminum Connection Head, Six Terminals, Extended Cover, Unpainted		Y	Y	Y	N	★
P	Aluminum Connection Head, Six Terminals, Flat Cover, Painted		Y	Y	Y	N	★
L	Aluminum Connection Head, Six Terminals, extended Cover, Painted		Y	Y	Y	N	★
N	Sensor only with 6-in. Teflon® -insulated, 22-gauge lead wires		Y	Y	Y	N	★
D	Rosemount Aluminum Connection Head with 1/2-in. Entries		Y	Y	Y	Y	★
Expanded							
C	Polypropylene Connection Head		N	N	N	N	
G	Rosemount SST Connection Head with 1/2-in. Entries		Y	Y	Y	Y	
Sensor Type (single element -50 to 400 °C (-58 to 752 °F))							
Standard							**Standard**
11	General-purpose style						★
21	Spring-loaded style						★
Expanded							
31(1)(2)	Bayonet spring-loaded style (available in (X) lengths of 1 to 21-in., increments of 1-in.)						
Extension Type							
Standard							**Standard**
A(3)	Nipple Coupling						★
C(3)	Nipple Union						★
N	None						★
Extension Length (E)							
Standard							**Standard**
00	0.0 in.						★
30	3.0 in.						★
60	6.0 in.						★
Thermowell Material							
Standard							**Standard**
A	Type 316 SST(4)						★
B	Type 304 SST						★
C	Carbon Steel						★
D	316L SST						★
E	304L SST						★
Expanded							
F	Alloy 20						
G	Alloy 400						
H	Alloy 600						
J	Alloy C-276						
L	Alloy B						
M	304 SST with Teflon (PTFE) coating						
P	Chrome Molybdenum F22						
R	Nickel 200						
T	Titanium						
U(5)	316 SST with Tantalum Sheath						
V	310 SST						
W	321 SST						
Z	Chrome Molybdenum F11						
Sensor/Immersion Length (U(6) lenght in inches)		**(L) Lenght in inches**	**(T(7)) Lenght in inches**				
Standard							**Standard**
015	1.5-in.	4.0-in.	1.0-in.				★
020	2.0-in.	4.0-in.	0.5-in.				★
025	2.5-in.	4.0-in.	0.0-in.				★
030	3.0-in.	6.0-in.	1.5-in.				★
035	3.5-in.	6.0-in.	1.0-in.				★
040	4.0-in.	6.0-in.	0.5-in.				★

TABLE 5. Series 68 RTD Sensor Assemblies WITH Thermowell
★ The Standard offering represents the most common options. The starred options (★) should be selected for best delivery.
The Expanded offering is subject to additional delivery lead time.

045	4.5-in.	6.0-in.	0.0-in.	★
050	5.0-in.	9.0-in.	2.5-in.	★
055	5.5-in.	9.0-in.	2.0-in.	★
060	6.0-in.	9.0-in.	1.5-in.	★
065	6.5-in.	9.0-in.	1.0-in.	★
070	7.0-in.	9.0-in.	0.5-in.	★
075	7.5-in.	9.0-in.	0.0-in.	★
080	8.0-in.	12.0-in.	2.5-in.	★
085	8.5-in.	12.0-in.	2.0-in.	★
090	9.0-in.	12.0	1.5-in.	★
095	9.5-in.	12.0-in.	1.0-in.	★
100	10.0-in.	12.0-in.	0.5-in.	★
105	10.5-in.	12.0-in.	0.0-in.	★
110	11.0-in.	15.0-in.	2.5-in.	★
115	11.5-in.	15.0-in.	2.0-in.	★
120	12.0-in.	15.0-in.	1.5-in.	★
125	12.5-in.	15.0-in.	1.0-in.	★
130	13.0-in.	15.0-in.	0.5-in.	★
135	13.5-in.	15.0-in.	0.0-in.	★
140	14.0-in.	18.0-in.	2.5-in.	★
145	14.5-in.	18.0-in.	2.0-in.	★
150	15.0-in.	18.0-in.	1.5-in.	★
155	15.5-in.	18.0-in.	1.0-in.	★
160	16.0-in.	18.0-in.	0.5-in.	★
165	16.5-in.	18.0-in.	0.0-in.	★
170	17.0-in.	21.0-in.	2.5-in.	★
175	17.5-in.	21.0-in.	2.0-in.	★
180	18.0-in.	21.0-in.	1.5-in.	★
185	18.5-in.	21.0-in.	1.0-in.	★
190	19.0-in.	21.0-in.	0.5-in.	★
195	19.5-in.	21.0-in.	0.0-in.	★
200	20.0-in.	24.0-in.	2.5-in.	★
205	20.5-in.	24.0-in.	2.0-in.	★
210	21.0-in.	24.0-in.	1.5-in.	★
215	21.5-in.	24.0-in.	1.0-in.	★
220	22.0-in.	24.0-in.	0.5-in.	★
225	22.5-in.	24.0-in.	0.0-in.	★
230	23.0-in.	27.0-in.	2.5-in.	★
240	24.0-in.	27.0-in.	1.5-in.	★
250	25.0-in.	27.0-in.	0.5-in.	★
260	26.0-in.	30.0-in.	2.5-in.	★
270	27.0-in.	30.0-in.	1.5-in.	★
280	28.0-in.	30.0-in.	0.5-in.	★
290	29.0-in.	33.0-in.	2.5-in.	★
300	30.0-in.	33.0-in.	1.5-in.	★
310	31.0-in.	33.0-in.	0.5-in.	★
320	32.0-in.	36.0-in.	2.5-in.	★
330	33.0-in.	36.0-in.	1.5-in.	★
340	34.0-in.	36.0-in.	0.5-in.	★
350	35.0-in.	39.0-in.	2.5-in.	★
360	36.0-in.	39.0-in.	1.5-in.	★
370	37.0-in.	39.0-in.	0.5-in.	★
380	38.0-in.	42.0-in.	2.5-in.	★
390	39.0-in.	42.0-in.	1.5-in.	★
400	40.0-in.	42.0-in.	0.5-in.	★
410	41.0-in.	45.0-in.	2.5-in.	★
420	42.0-in.	45.0-in.	1.5-in.	★

TABLE 5. Series 68 RTD Sensor Assemblies WITH Thermowell
★ The Standard offering represents the most common options. The starred options (★) should be selected for best delivery.
The Expanded offering is subject to additional delivery lead time.

430	43.0-in.	45.0-in.	0.5-in.	★
440	44.0-in.	48.0-in.	2.5-in.	★
450	45.0-in.	48.0-in.	1.5-in.	★
460	46.0-in.	48.0-in.	0.5-in.	★
470	47.0-in.	51.0-in.	2.5-in.	★
480	48.0-in.	51.0-in.	1.5-in.	★
Thermowell Style		**Mounting**	**Stem**	
Standard				**Standard**
T20(4)	Threaded	1/2-14 ANPT	Stepped	★
T22(4)(10)	Threaded	3/4-14 ANPT	Stepped	★
T24(4)(10)	Threaded	1-11.5 ANPT	Stepped	★
T26(10)	Threaded	3/4-14 ANPT	Tapered	★
T28(10)	Threaded	1-11.5 ANPT	Tapered	★
T30(10)	Threaded	1 1/2-11 ANPT	Tapered	★
T32(10)	Threaded	1/2-14 ANPT	Straight	★
T34(10)(11)	Threaded	3/4-14 ANPT	Straight	★
T36(10)(11)	Threaded	1-11.5 ANPT	Straight	★
T38(10)(11)	Threaded	3/4-14 ANPT	Straight	★
T44(10)	Threaded	1/2-14 ANPT	Tapered	★
W38	Welded	3/4-in. pipe	Stepped	★
W40	Welded	1-in. pipe	Stepped	★
W42	Welded	3/4-in. pipe	Tapered	★
W44	Welded	1-in. pipe	Tapered	★
W46	Welded	1 1/4-in. pipe	Tapered	★
W48(10)	Welded	3/4-in. pipe	Straight	★
W50(10)	Welded	1-in. pipe	Straight	★
F10(10)	Flanged	2-in., Class 150	Straight	★
F12(10)	Flanged	3-in., Class 150	Straight	★
F52	Flanged	1-in., Class 150	Stepped	★
F54	Flanged	1 1/2-in., Class 150	Stepped	★
F56	Flanged	2-in., Class 150	Stepped	★
F58	Flanged	1-in., Class 150	Tapered	★
F60	Flanged	1 1/2-in., Class 150	Tapered	★
F62	Flanged	2-in. Class 150	Tapered	★
F64(10)	Flanged	1-in., Class 150	Straight	★
F66(10)	Flanged	1 1/2-in., Class 150	Straight	★
F70	Flanged	1-in., Class 300	Stepped	★
F72	Flanged	1 1/2-in., Class 300	Stepped	★
F74	Flanged	2-in., Class 300	Stepped	★
F76	Flanged	1-in., Class 300	Tapered	★
F78	Flanged	1 1/2-in., Class 300	Tapered	★
F80	Flanged	2-in., Class 300	Tapered	★
F82(10)	Flanged	1-in., Class 300	Straight	★
F84(10)	Flanged	1 1/2-in., Class 300	Straight	★
F86(10)	Flanged	2-in., Class 300	Straight	★
F88(8)	Flanged	1-in., Class 600	Stepped	★
F90(8)	Flanged	1 1/2-in., Class 600	Stepped	★
F92(8)	Flanged	2-in., Class 600	Stepped	★
F94(8)	Flanged	1-in., Class 600	Tapered	★
F96(8)	Flanged	1 1/2-in., Class 600	Tapered	★
F98(8)	Flanged	2-in., Class 600	Tapered	★
F02(10)(8)	Flanged	1-in., Class 600	Straight	★
F04(10)(8)	Flanged	1 1/2-in., Class 600	Straight	★
F06(10)(8)	Flanged	2-in., Class 600	Straight	★
F16(8)	Flanged	1 1/2-in., Class 900	Tapered	★
F34(8)	Flanged	1 1/2-in., Class 1500	Tapered	★
F24(8)	Flanged	2-in., Class 1500	Tapered	★

TABLE 5. Series 68 RTD Sensor Assemblies WITH Thermowell
★ The Standard offering represents the most common options. The starred options (★) should be selected for best delivery.
The Expanded offering is subject to additional delivery lead time.

F08[8]	Flanged	1 1/2-in., Class 2500	Tapered	★
Q02[9]	Sanitary, Tri-Clamp	1-in., Tri-Clamp	Stepped	★
Q04[9]	Sanitary, Tri-Clamp	1 1/2-in., Tri-Clamp	Stepped	★
Q06[9]	Sanitary, Tri-Clamp	2-in., Tri-Clamp	Stepped	★
Q08[9]	Sanitary, Tri-Clamp	3-in., Tri-Clamp	Stepped	★
Q20[9]	Sanitary, Tri-Clamp	3/4-in., Tri-Clamp	Straight	★
Q22[9]	Sanitary, Tri-Clamp	1-in., Tri-Clamp	Straight	★
Q24[9]	Sanitary, Tri-Clamp	1 1/2-in., Tri-Clamp	Straight	★
Q26[9]	Sanitary, Tri-Clamp	2-in., Tri-Clamp	Straight	★
Q28[9]	Sanitary, Tri-Clamp	3-in., Tri-Clamp	Straight	★

Options (Include with selected model number)		
Product Certifications		
Standard		**Standard**
E5	FM Explosion-proof approval (See Figure 26)	★
E6	CSA Explosion-proof approval (See Figure 27)	★
E7[10]	SAA Flameproof approval (See Figure 30)	★
Callendar-Van Dusen Constants		
Standard		**Standard**
V1-V7	V-Callendar-van Dusen Constants (V4 not available with series 68 sensors)	★
Calibration Schedule		
Standard		**Standard**
X8	Customer-Specified Temperature Calibration	★
X9	Customer-Specified Single Temperature Point Calibration	★
Calibration Certification		
Standard		**Standard**
Q4	Calibration Certification, Customer-Specified Temperature	★
Mounting Adapters		
Standard		**Standard**
M5-M7	Mounting adapter; Sensor Compression Fitting: M5= 1/8-27 NPT, M6 = 1/4-18 NPT, M7 = 1/2-14 NPT	★
A Leadkit		
Standard		**Standard**
A1-A8	Twisted lead wire extension: A1 = 1.5 ft, A2 = 3.0 ft, A3 = 6.0 ft, A4 = 12 ft, A5 = 24 ft, A6 = 50 ft, A7 = 75 ft, A8 = 100 ft	★
B Leadkit		
Standard		**Standard**
B1-B8[1]	Shielded cable lead wire extension: B1 = 1.5 ft, B2 = 3.0 ft, B3 = 6.0 ft, B4 = 12 ft, B5 = 24 ft, B6 = 50 ft, B7 = 75 ft, B8 = 100 ft	★
C Leadkit		
Standard		**Standard**
C1-C8[1]	Armored cable lead wire extension: C1 = 1.5 ft, C2 = 3.0 ft, C3 = 6.0 ft, C4 = 12 ft, C5 = 24 ft, C6 = 50 ft, C7 = 75 ft, C8 = 100 ft	★
D Leadkit		
Standard		**Standard**
D1-D8[1]	Armored cable lead wire extensions with electrical plug: D1 = 1.5 ft, D2 = 3.0 ft, D3 = 6.0 ft, D4 = 12 ft, D5 = 24 ft, D6 = 50 ft, D7 = 75 ft, D8 = 100 ft	★
L Leadkit		
Standard		**Standard**
L1-L8	Armored cable mating plugs with lead wire extension: L1 = 1.5 ft, L2 = 3.0 ft, L3 = 6.0 ft, L4 = 12 ft, L5 = 24 ft, L6 = 50 ft, L7 = 75 ft, L8 = 100 ft	★
F Leadkit		
Standard		**Standard**
F1[1]	4-pin bayonet connector	★
H Leadkit		
Standard		**Standard**
H1-H8	4-pin connector mating plugs with lead wire extension: H1 = 1.5 ft, H2 = 3.0 ft, H3 = 6.0 ft, H4 = 12 ft, H5 = 24 ft, H6 = 50 ft, H7 = 75 ft, H8 = 100 ft	★
J Leadkit		
Standard		**Standard**
J1	Moisture-proof seal assembly for armored cables	★
Special External Pressure Test		
Standard		**Standard**
R01	Special External Pressure Test	★

TABLE 5. Series 68 RTD Sensor Assemblies WITH Thermowell
★ The Standard offering represents the most common options. The starred options (★) should be selected for best delivery.
The Expanded offering is subject to additional delivery lead time.

Material Certification		
Standard		**Standard**
Q8	Material Certification	★
Surface Finish Certification		
Standard		**Standard**
Q16	Surface Finish Certification	★
Dye Penetration Test		
Standard		**Standard**
R03	Dye Penetration Test	★
Thermowell Special Cleaning		
Standard		**Standard**
R04	Thermowell Special Cleaning	★
NACE Approval		
Standard		**Standard**
R05	NACE Approval	★
SST Plug and Chain		
Standard		**Standard**
R06	Stainless steel plug and chain	★
Full Penetration Weld		
Standard		**Standard**
R07(11)	Full penetration weld	★
Thermowell Concentric Serrations		
Standard		**Standard**
R09(11)(12)	Concentric serrations of thermowell flange face	★
Flat Faced Flange		
Standard		**Standard**
R10 (11)(12)	Flat Faced Flange	★
Vent Hole		
Standard		**Standard**
R11	Vent Hole	★
Thermowell Xray		
Standard		**Standard**
R12	Thermowell Xray	★
Special Surface Finish		
Standard		**Standard**
R14	Special Surface Finish (12 Ra Maximum “U” lenght = 22.5-in.)	★
Ring Joint Flange		
Standard		**Standard**
R16(11)(12)	Ring joint flange (Not available with 0-in. (T) length)	★
Electropolish		
Standard		**Standard**
R20	Electropolish	★
Wake Frequency		
Standard		**Standard**
R21	Wake Frequency-Thermowell Strength Calculation	★
Internal Pressure Test		
Standard		**Standard**
R22	Internal pressure test	★
Brass Plug & Chain		
Standard		**Standard**
R23	Brass plug & chain	★
Canadian Registration No.		
Expanded		
R24	CRN Marking for British Columbia	
R25	CRN Marking for Alberta	
R26	CRN Marking for Saskatchewan	
R27	CRN Marking for Manitoba	
R28	CRN Marking for Ontario	
R29	CRN Marking for Quebec	
R30	CRN Marking for New Brunswick	
R31	CRN Marking for Nova Scotia	
R32	CRN Marking for Prince Edward Island	
R33	CRN Marking for Yukon Territory	
R34	CRN Marking for Northwest Territory	

TABLE 5. Series 68 RTD Sensor Assemblies WITH Thermowell

★ The Standard offering represents the most common options. The starred options (★) should be selected for best delivery.
The Expanded offering is subject to additional delivery lead time.

R35	CRN Marking for Nunavut	
R36	CRN Marking for Newfoundland and Labrador	
Twell From Hex Stock		
Expanded		
R37	Thermowell from Hex stock	
Assemble to Options		
Standard		**Standard**
XA(13)	Assemble connection head or transmitter to a sensor assembly	★

(1) Not available with Sensor Lead Wire Termination codes R, P, or W.

(2) Not available with option codes E1, E5, E6, and E7.

(3) Codes A and C must be used with an extension length. Additional non-standard (E) lengths are available in 1/2-in. increments from 2.5 to 9-in.

(4) Standard configuration with best delivery.

(5) Available only with straight stem thermowells.

(6) Thermowells with an overall length ("U" + "T" + 1.75-in.) of 36-in. or less are machined from solid barstock. Thermowells with an overall length larger than 42-in. will be constructed using a welded 3-piece design and are available only with a stepped stem style.

(7) For additional (T) lengths, see Table 28 on page Temperature-71.

(8) F88 to F08 cannot be used with 0-in. (T) length. F08 cannot be used with 0- or 1/2-in. (T) length)

(9) Limited to 24" immersion length and 316 or 304 SST materials only.

(10) SAA flame-proof approval is only applicable if installed with a Rosemount 248, 644, or 3144P transmitter.

(11) Available on flanged thermowells only.

(12) Only one flange face option allowed.

(13) If ordering option code XA with a transmitter, specify the same option on the transmitter model code.

TABLE 6. Ordering Example

Typical Model Number	Model	Lead Wire Termination	Sensor Type	Extension Type	Extension Length	Material Code	Immersion Length	Mounting Style	Additional Options
	0068	N	21	A	30	A	075	T22	E5

SERIES 78 PLATINUM RTD

Series 78 sensors are intended for applications that require high accuracy, dual-elements, and/or are subjected to high temperatures. Rosemount Series 78 Platinum Resistance temperature sensors measure from –200 to 600 °C (–328 to 1112 °F). These sensors are available in capsule, general-purpose, spring-loaded, and bayonet spring-loaded designs in sensor (X) lengths from 1 to 68 inches.

Table 7 shows the interchangeability of the Series 78 Pt100-385 sensors. The performance of the standard Series 78 sensor conforms to the standard set by IEC 751 Class B. Additionally, IEC-751 Class A accuracy is available as an option. For maximum system accuracy, Rosemount Inc. can provide sensor calibration. See Sensor Characterization (Calibration) Schedules– Option Code V. Rosemount Inc. also offers optional sensor-to-transmitter matching capability obtainable through the use of Callendar-Van Dusen Constants. See Option Code “V” Callendar-van Dusen Constantsand Option X8Q4: Sensor Calibrated to a Customer-Specified Temperature Range.

The wire-wound design and construction of the General-Purpose Series 78 sensor allows direct immersion in non-corrosive fluids at reasonable static pressures. For corrosive environments and in many industrial applications, these sensors are commonly used with standard thermowell assemblies.

Platinum Element and Lead Wire Configurations

Single-element high-temperature sensors have four lead wires and may be used in 2-, 3-, and 4-wire signal conditioning systems.

Dual-element sensors have redundant elements to provide separate readout and control signals from a single measurement point. Dual-element sensors have three lead wires for each element and may be used with 2- or 3-wire systems. Dual-element sensors can also be wired to be used as compensation loop sensors (see Figure 8).

FIGURE 8. Wiring Configuration of a Dual-Element Sensor to Function as a Single Element Sensor with a Compensation Loop

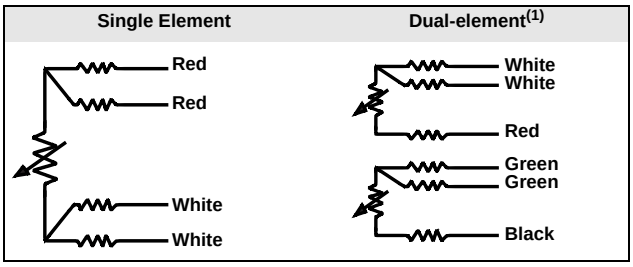

(1) Dual-element sensors are only available on Series 68Q and 78 sensors.

Construction

FIGURE 9. Construction of a Platinum Wire-wound RTD

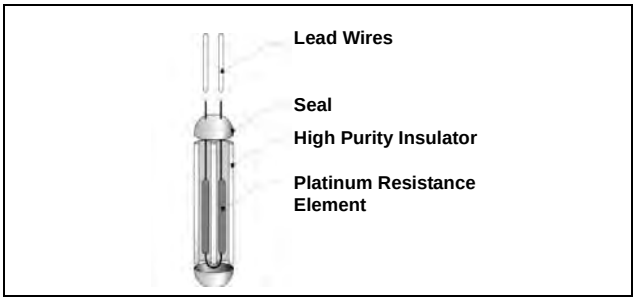

Specifications

Performance

Temperature Range

Series 78 single- and dual-element sensors may be used in temperatures from –200 to 500 °C (–328 to 932 °F). Series 78 single-element high-temperature sensors are provided for high-temperature service over the range of 0 to 600 °C (32 to 1112 °F).

Effect of Temperature Cycling

±0.04% (0.10 °C or 0.18 °F) maximum ice-point resistance shift following 10 cycles between –200 and 500 °C (–328 to 932 °F).

Stability

±0.05% maximum ice-point resistance shift following 1,000 hours at 400 °C (752 °F).

Accuracy

TABLE 7. Series 78 Interchangeability

Standard Series 78 IEC-751 Class B	Temperature
±0.80 °C (±1.44 °F)	-100 °C (-148 °F)
±0.30 °C (±0.54 °F)	0 °C (32 °F)
±0.80 °C (±1.44 °F)	100 °C (212 °F)
±1.80 °C (±3.24 °F)	300 °C (572 °F)
±2.30 °C (±4.14 °F)	400 °C (752 °F)
Series 78 with IEC-751 Class A Option	**Temperature**
±0.35 °C (±0.63 °F)	-100 °C (-148 °F)
±0.15 °C (±0.27 °F)	0 °C (32 °F)
±0.35 °C (±0.63 °F)	100 °C (212 °F)
±0.75 °C (±1.35 °F)	300 °C (572 °F)
±0.95 °C (±1.71 °F)	400 °C (752 °F)

Maximum Hysteresis

- Single- and dual-element, Nominal R0 100 Ohm Nominal alpha .00385 Ω/Ω °C.
- Single-element, high temperature: ±0.1% of range.

Time Constant

4 seconds maximum required to reach 63.2% sensor response in water flowing at 3 ft/s (0.91 m/s), 9.5 seconds for single-element high-temperature sensors.

Self Heating

18 mW minimum power dissipation required to cause a 1 °C (1.8 °F) temperature measurement error in water flowing at 3 ft/s, 25 mW for single-element high temperature sensors.

Insulation Resistance

500×10^6 ohms minimum insulation resistance when measured at 500 V dc at room temperature [20 °C (68 °F)]. Single element high-temperature sensors are measured at 100V dc.

Environmental

Humidity Limits

Lead seal is capable of withstanding 100% relative humidity.

Vibration Limits

Standard single- and dual-element sensors:

- ±0.03% maximum ice-point resistance shift due to 30 minutes of 21 g peak vibration from 5 to 350 Hz continuous sweep at 20 °C (68 °F) for unsupported stem length of less than 5.5 inches (140 mm).

Single-element high-temperature sensors:

- Meet ASTM E 1137-95. Cycling time is 3 hours per longitudinal axis, less the time spent at resonant dwells at the axis, from 5 to 500 Hz. The test level is 1.27 mm (0.05 in.) double amplitude displacement or peak g-level of 3, whichever is less.

Quality Assurance

Each sensor is subjected to a resistance accuracy test at 0 °C and an insulation resistance test.

Enclosure Ratings

When installed properly, Rosemount Series 78 sensors are suitable for indoor and outdoor NEMA 4X and CSA Enclosure Type 4X installations. See Hazardous Area Approvals for complete installation information.

Physical Specifications

Sheath Material

316 SST

Lead Wires

PTFE-insulated, nickel-coated, 22-gauge stranded copper wire.

Identification Data

The model and serial numbers and up to six lines of permanent tagging information are etched on each sensor. Stainless steel tags are available upon request.

Weight

- Capsule sensors: 5 oz
  General purpose and spring-loaded sensors: 9 oz

Ordering Information

TABLE 8. Series 78 RTD Sensor Assemblies WITHOUT Thermowell

★ The Standard offering represents the most common options. The starred options (★) should be selected for best delivery.
The Expanded offering is subject to additional delivery lead time.

Model	Product Description	Available Safety Approvals				
0078	Platinum Temperature Sensor WITHOUT Thermowell					
Sensor Lead Wire Termination			**FM**	**ATEX**	**CSA**	**SAA**
Standard						**Standard**
R	Aluminum Connection Head, Six Terminals, Flat Cover, Unpainted		Y	Y	Y	N ★
T	Aluminum Connection Head, Six Terminals, Extended Cover, Unpainted		Y	Y	Y	N ★
P	Aluminum Connection Head, Six Terminals, Flat Cover, Painted		Y	Y	Y	N ★
L	Aluminum Connection Head, Six Terminals, Extended Cover, Painted		Y	Y	Y	N ★
N	Sensor only with 6-in. PTFE-insulated, 22-gauge lead wires		Y	Y	Y	N ★
D	Rosemount Aluminum Connection head		Y	Y	Y	Y ★
Expanded						
C	Polypropylene Connection Head		N	N	N	N
G	Rosemount SST Connection Head with 1/2 in. Entries		Y	Y	Y	Y
Sensor Type		**Range**				
Single Element Temperature Sensors		**-200 to 500 °C (-328 to 932 °F)**				
Standard						**Standard**
01(1)(2)	Capsule style					★
11	General-purpose style					★
21(3)	Spring-loaded style					★
Expanded						
31(4)	Bayonet spring-loaded style (available in (X) lengths of 1 to 21-in, increments of 1-in.)					
Single Element High Temperature Sensors		**0 to 600 °C (32 to 1112 °F)**				
Standard						**Standard**
03(1)	Capsule style (available in (X) lengths of 3 to 48-in, increments of 1-in.)					★
13	General-purpose style (available in (X) lengths of 3 to 48-in, increments of 1/2-in.)					★
23(3)	Spring-loaded style (available in (X) lengths of 3 to 48-in, increments of 1/2-in.)					★
Expanded						
33(4)	Bayonet spring-loaded style (available in (X) lengths of 3 to 21-in, increments of 1-in.)					
Dual-element Temperature Sensors		**-200 to 500 °C (-328 to 932 °F)**				
Standard						**Standard**
05(1)	Capsule style					★
15	General-purpose style					★
25(3)	Spring-loaded style					★
Expanded						
35(4)	Bayonet spring-loaded style (available in (X) lengths of 1 to 21-in, increments of 1-in.)					
Extension Type		**Material**				
Standard						**Standard**
A(5)	Nipple Coupling	SST				★
C(5)	Nipple Union	SST				★
N	None (Use with extension length option code 00)					★
Extension Length (E)						
Standard						**Standard**
00	0.0 in.					★
30	3.0 in.					★
60	6.0 in.					★
Thermowell Material						
Standard						**Standard**
N	No thermowell required					★
Sensor/ Immersion Length (U length in inches)						
Standard						**Standard**
010	1.0-in.					★
015	1.5-in.					★
020	2.0-in.					★
025	2.5-in.					★
030	3.0-in.					★
035	3.5-in.					★

TABLE 8. Series 78 RTD Sensor Assemblies WITHOUT Thermowell
★ The Standard offering represents the most common options. The starred options (★) should be selected for best delivery.
The Expanded offering is subject to additional delivery lead time.

040	4.0-in.	★
045	4.5-in.	★
050	5.0-in.	★
055	5.5-in.	★
060	6.0-in.	★
065	6.5-in.	★
070	7.0-in.	★
075	7.5-in.	★
080	8.0-in.	★
085	8.5-in.	★
090	9.0-in.	★
095	9.5-in.	★
100	10.0-in.	★
105	10.5-in.	★
110	11.0-in.	★
115	11.5-in.	★
120	12.0-in.	★
125	12.5-in.	★
130	13.0-in.	★
135	13.5-in.	★
140	14.0-in.	★
145	14.5-in.	★
150	15.0-in.	★
155	15.5-in.	★
160	16.0-in.	★
165	16.5-in.	★
170	17.0-in.	★
175	17.5-in.	★
180	18.0-in.	★
185	18.5-in.	★
190	19.0-in.	★
195	19.5-in.	★
200	20.0-in.	★
205	20.5-in.	★
210	21.0-in.	★
215	21.5-in.	★
220	22.0-in.	★
225	22.5-in.	★
230	23.0-in.	★
235	23.5-in.	★
240	24.0-in.	★
245	24.5-in.	★
250	25.0-in.	★
260	26.0-in.	★
270	27.0-in.	★
280	28.0-in.	★
290	29.0-in.	★
300	30.0-in.	★
310	31.0-in.	★
320	32.0-in.	★
330	33.0-in.	★
340	34.0-in.	★
350	35.0-in.	★
360	36.0-in.	★
370	37.0-in.	★
380	38.0-in.	★
390	39.0-in.	★
400	40.0-in.	★

TABLE 8. Series 78 RTD Sensor Assemblies WITHOUT Thermowell
★ The Standard offering represents the most common options. The starred options (★) should be selected for best delivery.
The Expanded offering is subject to additional delivery lead time.

410	41.0-in.	★
420	42.0-in.	★
430	43.0-in.	★
440	44.0-in.	★
450	45.0-in.	★
460	46.0-in.	★
470	47.0-in.	★
480(6)	48.0-in.	★
Options (Include with selected model number)		
Sensor		
Expanded		
A(7)	IEC – 751 Class A Sensor	
Approval Options		
Standard		**Standard**
E5	FM Explosion-proof approval (See Figure 26)	★
E6	CSA Explosion-proof approval (See Figure 27)	★
E7(8)	SAA Flameproof approval (See Figure 30)	★
Callendar-Van Dusen Constants		
Standard		**Standard**
V1-V7	V-Callendar-van Dusen Constants	★
Calibration Schedule		
Standard		**Standard**
X8	Customer-Specified Temperature Range Calibration	★
X9	Customer-Specified Single Temperature Point Calibration	★
Calibration Certification		
Standard		**Standard**
Q4	Calibration Certification, Customer-Specified Temperature	★
Mounting Adapters		
Standard		**Standard**
M5-M7	Mounting adapter; Sensor Compression Fitting: M5= 1/8-27 NPT, M6 = 1/4-18 NPT, M7 = 1/2-14 NPT	★
A Leadkit		
Standard		**Standard**
A1-A8	Twisted lead wire extension: A1 = 1.5 ft, A2 = 3.0 ft, A3 = 6.0 ft, A4 = 12 ft, A5 = 24 ft, A6 = 50 ft, A7 = 75 ft, A8 = 100 ft	★
B Leadkit		
Standard		**Standard**
B1-B8(9)	Shielded cable lead wire extension: B1 = 1.5 ft, B2 = 3.0 ft, B3 = 6.0 ft, B4 = 12 ft, B5 = 24 ft, B6 = 50 ft, B7 = 75 ft, B8 = 100 ft	★
C Leadkit		
Standard		**Standard**
C1-C8(9)	Armored cable lead wire extension: C1 = 1.5 ft, C2 = 3.0 ft, C3 = 6.0 ft, C4 = 12 ft, C5 = 24 ft, C6 = 50 ft, C7 = 75 ft, C8 = 100 ft	★
D Leadkit		
Standard		**Standard**
D1-D8(9)	Armored cable lead wire extensions with electrical plug: D1 = 1.5 ft, D2 = 3.0 ft, D3 = 6.0 ft, D4 = 12 ft, D5 = 24 ft, D6 = 50 ft, D7 = 75 ft, D8 = 100 ft	★
L Leadkit		
Standard		**Standard**
L1-L8	Armored cable mating plugs with lead wire extension: L1 = 1.5 ft, L2 = 3.0 ft, L3 = 6.0 ft, L4 = 12 ft, L5 = 24 ft, L6 = 50 ft, L7 = 75 ft, L8 = 100 ft	★
F Leadkit		
Standard		**Standard**
F1(9)	4-pin bayonet connector	★
H Leadkit		
Standard		**Standard**
H1-H8	4-pin connector mating plugs with lead wire extension: H1 = 1.5 ft, H2 = 3.0 ft, H3 = 6.0 ft, H4 = 12 ft, H5 = 24 ft, H6 = 50 ft, H7 = 75 ft, H8 = 100 ft	★
J Leadkit		
Standard		**Standard**
J1	Moisture-proof seal assembly for armored cables	★
Assemble to Options		
Standard		**Standard**
XA(10)	Assemble connection head or transmitter to a sensor assembly (PTFE paste where appropriate, fully wired.)	★

(1) Capsule style available in 1-in. increments only. See "Mounting Adapters for Series 58, 68, 78, and 183" on page Temperature-66.

(2) Must be used with Sensor Lead Wire Termination code N and is not available with assembly option XA or with approval option codes E1, E5, E6, or E7.

(3) Spring loaded sensors must be installed in a thermowell assembly to meet the requirements of explosion-proof approval option code E6.

(4) This option is not available with Sensor Lead Wire Termination codes R, P or C or approval code E1, E6, and E7.

(5) Codes A and C must be used with an extension length. Additional non-standard (E) lengths are available in 1/2-in. increments from 2.5 to 9-in.

(6) Additional lengths are available up to 68-in., increments of 1-in.

(7) The IEC 751 Class A option is not available with high-temperature sensors.

(8) SAA Flameproof approvals only applicable if installed with a Rosemount 248, 644, or 3144P transmitter.

(9) Requires Sensor lead wire termination code N

(10) If ordering option code XA with a transmitter, specify the same option on the transmitter model code.

TABLE 9. Ordering Example

Typical Model Number	Model	Lead Wire Termination	Sensor Type	Extension Type	Extension Length	Thermowell Material	Immersion Length	Additional Options
	0078	N	21	N	00	N	045	E5

Ordering Information

TABLE 10. Series 78 RTD Sensor Assemblies WITH Thermowell

★ The Standard offering represents the most common options. The starred options (★) should be selected for best delivery. The Expanded offering is subject to additional delivery lead time.

Model	Product Description	Available Safety Approvals					
0078	Platinum Temperature Sensor WITH Thermowell						
Sensor Lead Wire Termination		**FM**	**ATEX**	**CSA**	**SAA**		
Standard							**Standard**
R	Aluminum Connection Head, Six Terminals, Flat Cover, Unpainted	Y	Y	Y	N		★
T	Aluminum Connection Head, Six Terminals, Extended Cover, Unpainted	Y	Y	Y	N		★
P	Aluminum Connection Head, Six Terminals, Flat Cover, Painted	Y	Y	Y	N		★
L	Aluminum Connection Head, Six Terminals, Extended Cover, Painted	Y	Y	Y	N		★
N	Sensor only with 6-in. Teflon®-insulated, 22-gauge lead wires	Y	Y	Y	N		★
D	Rosemount Aluminum Connection head with 1/2- in. Entries	Y	Y	Y	Y		★
Expanded							
C	Polypropylene Connection Head	N	N	N	N		
G	Rosemount SST Connection Head with 1/2- in. Entries	Y	Y	Y	Y		
Sensor Type		**Temperature**					
Single Element Temperature Sensors		**-200 to 500 °C (-328 to 932 °F)**					
Standard							**Standard**
11	General-purpose style						★
21	Spring-loaded style						★
Expanded							
31(1)(2)	Bayonet spring-loaded style (available in (X) lengths over 21-in.)						
Single Element High Temperature Sensors		**0 to 500 °C (32 to 1112 °F)**					
Standard							**Standard**
13	General-purpose style (available in (X) lengths of 3 to 24-in., increments of 1/2-in.)						★
23	Spring-loaded style (available in (X) lengths of 3 to 24-in., increments of 1/2-in.)						★
Expanded							
33(1)(2)	Bayonet spring-loaded style (available in (X) lengths of 3 to 21-in., increments of 1-in.)						
Dual-element Temperature Sensors		**-200 to 500 °C (-328 to 932 °F)**					
Standard							**Standard**
15	General-purpose style						★
25	Spring-loaded style						★
Expanded							
35(1)(2)	Bayonet spring-loaded style (available in (X) lengths of 1 to 21-in., increments of 1-in.)						
Extension Type	**Material**						
Standard							**Standard**
A(3)	Nipple Coupling	SST					★
C(3)	Nipple Union	SST					★
N	None (Use with extension length option code 00)						★
Extension Length (E)							
Standard							**Standard**
00	0.0 in.						★
30	3.0 in.						★
60	6.0 in.						★
Thermowell Material							
Standard							**Standard**
A	Type 316 SST(4)						★
B	Type 304 SST						★
C	Carbon Steel						★
D	316L SST						★
E	304L SST						★
Expanded							
F	Alloy 20						
G	Alloy 400						
H	Alloy 600						
J	Alloy C-276						
L	Alloy B						
M	304 SST with Teflon (PTFE) coating						
P	Chrome Molybdenum F22						
R	Nickel 200						
T	Titanium						
U(5)	316 SST with Tantalum Sheath						

TABLE 10. Series 78 RTD Sensor Assemblies WITH Thermowell
★ The Standard offering represents the most common options. The starred options (★) should be selected for best delivery.
The Expanded offering is subject to additional delivery lead time.

V	310 SST			
W	321 SST			
Z	Chrome Molybdenum F11			
Sensor/Immersion Length (U) length in inches)		**(L) Length in inches**	**(T) Length in inches**	
Standard				**Standard**
015[6]	1.5-in.	4.0-in.	1.0-in.	★
020[6]	2.0-in.	4.0-in.	0.5-in.	★
025[6]	2.5-in.	4.0-in.	0.0-in.	★
030	3.0-in.	6.0-in.	1.5-in.	★
035	3.5-in.	6.0-in.	1.0-in.	★
040	4.0-in.	6.0-in.	0.5-in.	★
045	4.5-in.	6.0-in.	0.0-in.	★
050	5.0-in.	9.0-in.	2.5-in.	★
055	5.5-in.	9.0-in.	2.0-in.	★
060	6.0-in.	9.0-in.	1.5-in.	★
065	6.5-in.	9.0-in.	1.0-in.	★
070	7.0-in.	9.0-in.	0.5-in.	★
075	7.5-in.	9.0-in.	0.0-in.	★
080	8.0-in.	12.0-in.	2.5-in.	★
085	8.5-in.	12.0-in.	2.0-in.	★
090	9.0-in.	12.0-in.	1.5-in.	★
095	9.5-in.	12.0-in.	1.0-in.	★
100	10.0-in.	12.0-in.	0.5-in.	★
105	10.5-in.	12.0-in.	0.0-in.	★
110	11.0-in.	15.0-in.	2.5-in.	★
115	11.5-in.	15.0-in.	2.0-in.	★
120	12.0-in.	15.0-in.	1.5-in.	★
125	12.5-in.	15.0-in.	1.0-in.	★
130	13.0-in.	15.0-in.	0.5-in.	★
135	13.5-in.	15.0-in.	0.0-in.	★
140	14.0-in.	18.0-in.	2.5-in.	★
145	14.5-in.	18.0-in.	2.0-in.	★
150	15.0-in.	18.0-in.	1.5-in.	★
155	15.5-in.	18.0-in.	1.0-in.	★
160	16.0-in.	18.0-in.	0.5-in.	★
165	16.5-in.	18.0-in.	0.0-in.	★
170	17.0-in.	21.0-in.	2.5-in.	★
175	17.5-in.	21.0-in.	2.0-in.	★
180	18.0-in.	21.0-in.	1.5-in.	★
185	18.5-in.	21.0-in.	1.0-in.	★
190	19.0-in.	21.0-in.	0.5-in.	★
195	19.5-in.	21.0-in.	0.0-in.	★
200	20.0-in.	24.0-in.	2.5-in.	★
205	20.5-in.	24.0-in.	2.0-in.	★
210	21.0-in.	24.0-in.	1.5-in.	★
215	21.5-in.	24.0-in.	1.0-in.	★
220	22.0-in.	24.0-in.	0.5-in.	★
225	22.5-in.	24.0-in.	0.0-in.	★
230	23.0-in.	27.0-in.	2.5-in.	★
240	24.0-in.	27.0-in.	1.5-in.	★
250	25.0-in.	27.0-in.	0.5-in.	★
260	26.0-in.	30.0-in.	2.5-in.	★
270	27.0-in.	30.0-in.	1.5-in.	★
280	28.0-in.	30.0-in.	0.5-in.	★
290	29.0-in.	33.0-in.	2.5-in.	★
300	30.0-in.	33.0-in.	1.5-in.	★
310	31.0-in.	33.0-in.	0.5-in.	★
320	32.0-in.	36.0-in.	2.5-in.	★
330	33.0-in.	36.0-in.	1.5-in.	★
340	34.0-in.	36.0-in.	0.5-in.	★

TABLE 10. Series 78 RTD Sensor Assemblies WITH Thermowell
★ The Standard offering represents the most common options. The starred options (★) should be selected for best delivery.
The Expanded offering is subject to additional delivery lead time.

350	35.0-in.	39.0-in.	2.5-in.	★
360	36.0-in.	39.0-in.	1.5-in.	★
370	37.0-in.	39.0-in.	0.5-in.	★
380	38.0-in.	42.0-in.	2.5-in.	★
390	39.0-in.	42.0-in.	1.5-in.	★
400	40.0-in.	42.0-in.	0.5-in.	★
410	41.0-in.	45.0-in.	2.5-in.	★
420	42.0-in.	45.0-in.	1.5-in.	★
430	43.0-in.	45.0-in.	0.5-in.	★
440	44.0-in.	48.0-in.	2.5-in.	★
450	45.0-in.	48.0-in.	1.5-in.	★
460	46.0-in.	48.0-in.	0.5-in.	★
470	47.0-in.	51.0-in.	2.5-in.	★
480	48.0-in.	51.0-in.	1.5-in.	★
Thermowell Style		**Mounting**	**Stem**	
Standard				**Standard**
T20(4)	Threaded	1/2-14 ANPT	Stepped	★
T22(4)	Threaded	3/4-14 ANPT	Stepped	★
T24(4)	Threaded	1-11.5 ANPT	Stepped	★
T26	Threaded	3/4-14 ANPT	Tapered	★
T28	Threaded	1-11.5 ANPT	Tapered	★
T30	Threaded	1 1/2-11 ANPT	Tapered	★
T32	Threaded	1/2-14 ANPT	Straight	★
T34	Threaded	3/4-14 ANPT	Straight	★
T36	Threaded	1-11.5 ANPT	Straight	★
T38	Threaded	3/4-14 ANPT	Straight	★
T44	Threaded	1/2-14 ANPT	Tapered	★
W38	Welded	3/4-in. pipe	Stepped	★
W40	Welded	1-in. pipe	Stepped	★
W42	Welded	3/4-in. pipe	Tapered	★
W44	Welded	1-in. pipe	Tapered	★
W46	Welded	1 1/4-in. pipe	Tapered	★
W48	Welded	3/4-in. pipe	Straight	★
W50	Welded	1-in. pipe	Straight	★
F10	Flanged	2-in., Class 150	Straight	★
F12	Flanged	3-in., Class 150	Straight	★
F52	Flanged	1-in., Class 150	Stepped	★
F54	Flanged	1 1/2-in., Class 150	Stepped	★
F56	Flanged	2-in., Class 150	Stepped	★
F58	Flanged	1-in., Class 150	Tapered	★
F60	Flanged	1 1/2-in., Class 150	Tapered	★
F62	Flanged	2-in. Class 150	Tapered	★
F64	Flanged	1-in., Class 150	Straight	★
F66	Flanged	1 1/2-in., Class 150	Straight	★
F70	Flanged	1-in., Class 300	Stepped	★
F72	Flanged	1 1/2-in., Class 300	Stepped	★
F74	Flanged	2-in., Class 300	Stepped	★
F76	Flanged	1-in., Class 300	Tapered	★
F78	Flanged	1 1/2-in., Class 300	Tapered	★
F80	Flanged	2-in., Class 300	Tapered	★
F82	Flanged	1-in., Class 300	Straight	★
F84	Flanged	1 1/2-in., Class 300	Straight	★
F86	Flanged	2-in., Class 300	Straight	★
F88(7)	Flanged	1-in., Class 600	Stepped	★
F90(7)	Flanged	1 1/2-in., Class 600	Stepped	★
F92(7)	Flanged	2-in., Class 600	Stepped	★
F94(7)	Flanged	1-in., Class 600	Tapered	★
F96(7)	Flanged	1 1/2-in., Class 600	Tapered	★
F98(7)	Flanged	2-in., Class 600	Tapered	★

TABLE 10. Series 78 RTD Sensor Assemblies WITH Thermowell
★ The Standard offering represents the most common options. The starred options (★) should be selected for best delivery.
The Expanded offering is subject to additional delivery lead time.

F02[7]	Flanged	1-in., Class 600	Straight	★
F04[7]	Flanged	1 1/2-in., Class 600	Straight	★
F06[7]	Flanged	2-in., Class 600	Straight	★
F16[7]	Flanged	1 1/2-in., Class 900	Tapered	★
F34[7]	Flanged	1 1/2-in., Class 1500	Tapered	★
F24[7]	Flanged	2-in., Class 1500	Tapered	★
F08[7]	Flanged	1 1/2-in., Class 2500	Tapered	★
Q02[8]	Sanitary, Tri-Clamp	1-in., Tri-Clamp	Stepped	★
Q04[8]	Sanitary, Tri-Clamp	1 1/2-in., Tri-Clamp	Stepped	★
Q06[8]	Sanitary, Tri-Clamp	2-in., Tri-Clamp	Stepped	★
Q08[8]	Sanitary, Tri-Clamp	3-in., Tri-Clamp	Stepped	★
Q20[8]	Sanitary, Tri-Clamp	3/4-in., Tri-Clamp	Straight	★
Q22[8]	Sanitary, Tri-Clamp	1-in., Tri-Clamp	Straight	★
Q24[8]	Sanitary, Tri-Clamp	1 1/2-in., Tri-Clamp	Straight	★
Q26[8]	Sanitary, Tri-Clamp	2-in., Tri-Clamp	Straight	★
Q28[8]	Sanitary, Tri-Clamp	3-in., Tri-Clamp	Straight	★

Options (Include with selected model number)

Sensor		
Expanded		
A[9]	IEC 751 Class A sensor	
Approval Options		
Standard		**Standard**
E5	FM Explosion-proof approval (See Figure 26)	★
E6	CSA Explosion-proof approval (See Figure 27)	★
E7[10]	SAA Flameproof approval (See Figure 30)	★
Callendar-Van Dusen Constant		
Standard		**Standard**
V1-V7	V-Callendar-van Dusen Constants	★
Calibration Schedule		
Standard		**Standard**
X8	Customer-Specified Temperature Range Calibration	★
X9	Customer-Specified Single Temperature Point Calibration	★
Calibration Certification		
Standard		**Standard**
Q4	Calibration Certification, Customer-Specified Temperature	★
Mounting Adapters		
Standard		**Standard**
M5-M7	Mounting adapter; Sensor Compression Fitting: M5= 1/8-27 NPT, M6 = 1/4-18 NPT, M7 = 1/2-14 NPT	★
A Leadkit		
Standard		**Standard**
A1-A8	Twisted lead wire extension: A1 = 1.5 ft, A2 = 3.0 ft, A3 = 6.0 ft, A4 = 12 ft, A5 = 24 ft, A6 = 50 ft, A7 = 75 ft, A8 = 100 ft	★
B Leadkit		
Standard		**Standard**
B1-B8[11]	Shielded cable lead wire extension: B1 = 1.5 ft, B2 = 3.0 ft, B3 = 6.0 ft, B4 = 12 ft, B5 = 24 ft, B6 = 50 ft, B7 = 75 ft, B8 = 100 ft	★
C Leadkit		
Standard		**Standard**
C1-C8[11]	Armored cable lead wire extension: C1 = 1.5 ft, C2 = 3.0 ft, C3 = 6.0 ft, C4 = 12 ft, C5 = 24 ft, C6 = 50 ft, C7 = 75 ft, C8 = 100 ft	★
D Leadkit		
Standard		**Standard**
D1-D8[11]	Armored cable lead wire extensions with electrical plug: D1 = 1.5 ft, D2 = 3.0 ft, D3 = 6.0 ft, D4 = 12 ft, D5 = 24 ft, D6 = 50 ft, D7 = 75 ft, D8 = 100 ft	★
L Leadkit		
Standard		**Standard**
L1-L8	Armored cable mating plugs with lead wire extension: L1 = 1.5 ft, L2 = 3.0 ft, L3 = 6.0 ft, L4 = 12 ft, L5 = 24 ft, L6 = 50 ft, L7 = 75 ft, L8 = 100 ft	★
F Leadkit		
Standard		**Standard**
F1[11]	4-pin bayonet connector	★
H Leadkit		
Standard		**Standard**
H1-H8	4-pin connector mating plugs with lead wire extension: H1 = 1.5 ft, H2 = 3.0 ft, H3 = 6.0 ft, H4 = 12 ft, H5 = 24 ft, H6 = 50 ft,	★

TABLE 10. Series 78 RTD Sensor Assemblies WITH Thermowell
★ The Standard offering represents the most common options. The starred options (★) should be selected for best delivery.
The Expanded offering is subject to additional delivery lead time.

J Leadkit		
Standard		**Standard**
J1	Moisture-proof seal assembly for armored cables	★
Special External Pressure Test		
Standard		**Standard**
R01	Special External Pressure Test	★
Material Certifications		
Standard		**Standard**
Q8	Thermowell material certificate	★
Surface Finish Certification		
Standard		**Standard**
Q16	Surface Finish Certification	★
Dye Penetration Test		
Standard		**Standard**
R03	Dye Penetration Test	★
Thermowell Special Cleaning		
Standard		**Standard**
R04	Thermowell Special Cleaning	★
NACE Approval		
Standard		**Standard**
R05	NACE Approval	★
SST Plug and Chain		
Standard		**Standard**
R06	SST Plug and Chain	★
Full Penetration Weld		
Standard		**Standard**
R07(12)	Full Penetration Weld	★
Themowell Concentric Serrations		
Standard		**Standard**
R09(12)(13)	Concentric Serrations of Thermowell Flange Face	★
Flat Faced Flange		
Standard		**Standard**
R10 (12)(13)	Flat Faced Flange	★
Vent Hole		
Standard		**Standard**
R11	Vent Hole	★
Thermowell Xray		
Standard		**Standard**
R12	Thermowell Xray	★
Special Surface Finish		
Standard		**Standard**
R14	Special Surface Finish (12 RA Maximum “U” length = 22.5-in.)	★
Ring Joint Flange		
Standard		**Standard**
R16(12)(13)	Ring Joint Flange (not available with 0-in. (T) length)	★
Electropolish		
Standard		**Standard**
R20	Electropolish	★
Wake Frequency		
Standard		**Standard**
R21	Wake Frequency - Thermowell Strength Calculation	★
Internal Pressure Test		
Standard		**Standard**
R22	Internal Pressure Test	★
Brass Plug & Chain		
Standard		**Standard**
R23	Brass Plug & Chain	★
Canadian Registration No.		
Expanded		
R24	CRN Marking for British Columbia	
R25	CRN Marking for Alberta	
R26	CRN Marking for Saskatchewan	
R27	CRN Marking for Manitoba	
R28	CRN Marking for Ontario	
R29	CRN Marking for Quebec	

TABLE 10. Series 78 RTD Sensor Assemblies WITH Thermowell

★ The Standard offering represents the most common options. The starred options (★) should be selected for best delivery.
The Expanded offering is subject to additional delivery lead time.

R30	CRN Marking for New Brunswick	
R31	CRN Marking for Nova Scotia	
R32	CRN Marking for Prince Edward Island	
R33	CRN Marking for Yukon Territory	
R34	CRN Marking for Northwest Territory	
R35	CRN Marking for Nunavut	
R36	CRN Marking for Newfoundland and Labrador	
Twell From Hex Stock		
Expanded		
R37	Thermowell From Hex Stock	
Assemble to Option		
Standard		**Standard**
XA(2)(14)	Assemble connection head or transmitter to a sensor assembly (PTFE paste where appropriate, fully wired.)	★

(1) Not available with Sensor Lead Wire Termination codes R, P or W.
(2) Not available with Approval codes E1, E6, or E7.
(3) Codes A and C must be used with an extension length. Additional non-standard (E) lengths are available in 1/2-in. increments from 2.5 to 9-in.
(4) Standard configuration with best delivery.
(5) Available only with straight stem flanged thermowells.
(6) Straight or Tapered stem only.
(7) F88 to F08 cannot be used with 0-in. (T) length. F08 cannot be used with 0- or 1/2-in. (T) length
(8) Limited to 24" immersion length and 316 or 304 SST materials only.
(9) The IEC 751 Class A option is not available with high-temperature sensors.
(10) SAA Flameproof approvals only applicable if installed with a Rosemount 248, 644, or 3144 transmitter.
(11) These options are not available with Sensor Lead Wire Termination codes R, P, or W.
(12) Available on flanged thermowells only.
(13) Only one flange face option allowed.
(14) If ordering option code XA with a transmitter, specify the same option on the transmitter model code.

TABLE 11. Ordering Example

Typical Model Number	Model	Lead Wire Termination	Sensor Type	Extension Type	Extension Length	Material Code	Immersion Length	Mounting Style	Additional Options
	0078	N	21	A	30	A	075	T22	E5

SERIES 68Q SANITARY PLATINUM RTD

Rosemount Series 68Q sanitary RTD temperature sensors measure from –50 to 200 °C (–58 to 392 °F). Series 68Q sensors are available in Tri-Clamp® endcap designs in immersion lengths from 1.0 to 9.5 inches. Table 12 shows the interchangeability of the Series 68Q sensor.

Accuracy

TABLE 12. Series 68Q Interchangeability (IEC 751 Class B)

±0.55 °C (±0.99 °F) at –50 °C (–58 °F)
±0.30 °C (±0.54 °F) at 0 °C (32 °F)
±0.80 °C (±1.44 °F) at 100 °C (212 °F)
±1.30 °C (±2.34 °F) at 200 °C (392 °F)

Construction

Series 68Q sensors conform to 3-A Sanitary Standards and feature product contact surfaces designed for CIP cleaning. The response times of Series 68Q sensors meet the Grade A Pasteurized Milk Ordinance (PMO) specification for thermometric response of an indicating thermometer on a pipeline.

Series 68Q sensors are offered in a Tri-Clamp sanitary endcap configuration. The sensor capsule is welded into the 316 SST sanitary endcap/stem assembly. The product contact of this assembly is polished to a finish that exceeds No. 4 minimum finish as required by the 3–A Sanitary Council Standard #74-02.

Platinum Element and Lead Wire Configurations

Single-element temperature sensors have four lead wires and may be used in 2-, 3-, and 4-wire signal conditioning systems. Dual-element sensors have six lead wires and may be used in 2- and 3-wire signal conditioning systems.

SPECIFICATIONS

Performance

Temperature Range

–50 to 200 °C (–58 to 392 °F)

Maximum Hysteresis

±0.09% of operating temperature range

Stability

Tri-clamp O.D. Tube Size 1-in. and greater:

±0.04% maximum ice-point resistance shift following 1,000 hours at maximum specified temperature 392 °F (200 °C).

Tri-clamp O.D. Tube Size $^1/_2$ - $^3/_4$-in.:

±0.08% maximum ice-point resistance shift following 1,000 hours at maximum specified temperature 392 °F (200 °C).

Response Time

Tri-clamp O.D. Tube Size 1-in. and greater

Less than 3.5 seconds required to reach 63.2% sensor response in water flowing at 3 ft/s (0.91 m/s). Meets PMO specification

Tri-clamp O.D. Tube Size $^1/_2$ - $^3/_4$-in.:

Less than 1.5 seconds required to reach 63.2% sensor response in water flowing at 3 ft/s (0.91 m/s).

Insulation Resistance

500×10^6 ohms minimum insulation resistance when measured at 100 V dc at room temperature

Surface Finish

$32R_A$ standard finish on product contact surfaces. Meets 3-A requirements

$15R_A$ high mechanical polish available with option code HP.

Environmental

Humidity Limits

Lead seal is capable of withstanding 100% relative humidity

Quality Assurance

Each sensor is subjected to a resistance accuracy test at 0 °C

Physical Specifications

Sheath Material

316 SST

Lead Wire

PTFE-insulated, nickel-coated, 24-gauge stranded copper wire

Identification Data

The model and serial numbers and up to six lines of permanent tagging information are etched on each sensor. Stainless steel tags are available upon request

Weight

0.6 to 2.0 lb (0.3 to 0.9 kg)

Dimensional Drawings

FIGURE 10. 68Q Sanitary Sensor and Polypropylene Connection Head Dimensional Drawings

68Q Sanitary Sensor with Tri-Clamp® Endcap

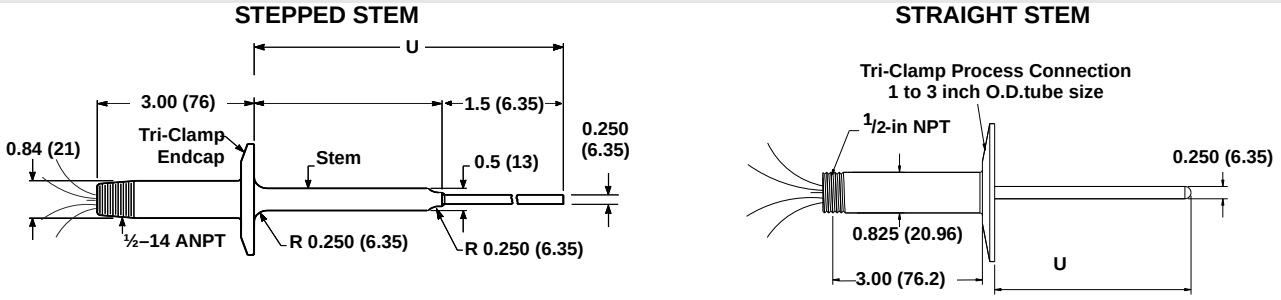

68Q Mini General Purpose Sensor with Cable and Strain Relief

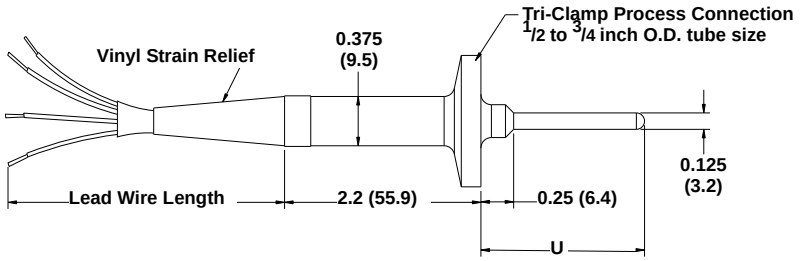

68Q Mini General Purpose Sensor with 1/2-in. NPT Threaded Adapter

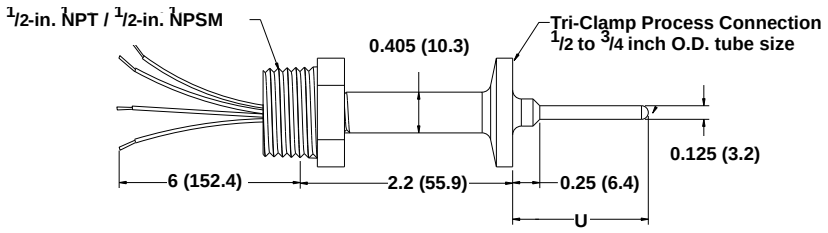

68Q Mini Spring Loaded Sensor with Thermowell and Replaceable Sensor

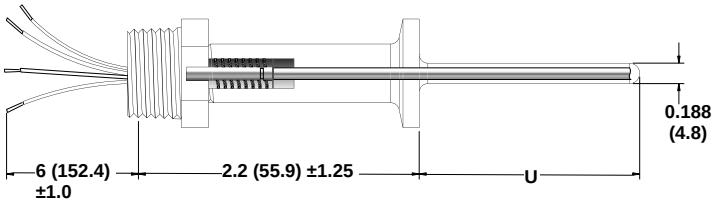

Dimensions are in inches (millimeters)

TABLE 13. Series 68Q Spare Parts List

Mini Spring-Loaded Sanitary Replacement Sensors and Thermowells		
Immersion Length (U)	**Replacement Sensor Part Number**	**Replacement Thermowell Part Number**
2.0	00068-4035-0020	00068-4035-1020
2.5	00068-4035-0025	00068-4035-1025
3.0	00068-4035-0030	00068-4035-1030

Ordering Information

TABLE 14. Series 68Q Sanitary Platinum RTD Sensor Assemblies

★ The Standard offering represents the most common options. The starred options (★) should be selected for best delivery. The Expanded offering is subject to additional delivery lead time.

Model	Product Description		
0068Q	Sanitary Platinum RTD Sensor Assembly		
Sensor Lead Wire Termination			
Standard			**Standard**
P	Aluminum Connection Head, Six Terminals, Flat Cover, Painted		★
L	Aluminum Connection Head, Six Terminals, Extended Cover, Painted		★
N	Sensor only		★
D	Rosemount Aluminum Connection Head with 1/2-in. Entries		★
Expanded			
C	Polypropylene Connection Head		
G	Rosemount SST Connection Head with 1/2-in. Entries		
Sensor Type		**Temperature**	
Standard			**Standard**
11	Single Stepped Stem	-50 to 200 °C (-58 to 392 °F)	★
15	Dual Stepped Stem	-50 to 200 °C (-58 to 392 °F)	★
21	Single Straight Stem	-50 to 200 °C (-58 to 392 °F)	★
25	Dual Straight Stem	-50 to 200 °C (-58 to 392 °F)	★
30(1) (2)	Mini General Purpose 6-in. lead with 1/2-in. NPT Threaded Adapter	-50 to 200 °C (-58 to 392 °F)	★
31(1)(2)(3)	Mini General Purpose 6-in. lead with 1/2-in. NPSM Threaded Adapter	-50 to 200 °C (-58 to 392 °F)	★
32(1)(2)(3)	Mini General Purpose 180-in. cable with strain relief	-50 to 200 °C (-58 to 392 °F)	★
33(1)(2)(3)	Mini General Purpose 300-in. cable with strain relief	-50 to 200 °C (-58 to 392 °F)	★
41(4)	Mini Spring Loaded with thermowell replacement sensor	-50 to 200 °C (-58 to 392 °F)	★
Sensor Immersion Length (L) (inches			
Standard			**Standard**
U010	1.00 in.		★
U011	1.10 in.		★
U012	1.20 in.		★
U013	1.25 in.		★
U014	1.40 in.		★
U015	1.50 in.		★
U016	1.60 in.		★
U017	1.70 in.		★
U018	1.80 in.		★
U019	1.90 in.		★
U020	2.00 in.		★
U025	2.50 in.		★
U030	3.00 in.		★
U035	3.50 in.		★
U040(5)	4.00 in.		★
U045	4.50 in.		★
U050(5)	5.00 in.		★
U055	5.50 in.		★
U060	6.00 in.		★
U065	6.50 in.		★
U070	7.00 in.		★
U075	7.50 in.		★
U080	8.00 in.		★
U085	8.50 in.		★
U090	9.00 in.		★
U095	9.50 in.		★
Endcap Type		**O.D. Tube Size (inches)**	
Standard			**Standard**
L050(6)	Tri-Clamp	1/2 to 3/4 in.	★
L100	Tri-Clamp	1.00 in.	★
L150(5)	Tri-Clamp	1.50 in.	★

TABLE 14. Series 68Q Sanitary Platinum RTD Sensor Assemblies
★ The Standard offering represents the most common options. The starred options (★) should be selected for best delivery.
The Expanded offering is subject to additional delivery lead time.

L200(5)	Tri-Clamp	2.00 in.	★
L250	Tri-Clamp	2.50 in.	★
L300	Tri-Clamp	3.00 in.	★
Options (Include with selected model number)			
Callendar-Van Dusen Constants			
Standard			**Standard**
V1-V7	V-Callendar-van Dusen Constants (V3, V4, V6 not available with 68Q)		★
Calibration Schedule			
Standard			**Standard**
X8	Customer-Specified Temperature Range Calibration		★
X9	Customer-Specified Single Temperature Point Calibration		★
Calibration Certification			
Standard			**Standard**
Q4	Calibration Certification, Customer-Specified Temperature		★
Special Surface Finish Electro Polish			
Standard			**Standard**
R20(7)	Electropolishing of wetted surfaces		★
Special Surface Finish High Mechanical Polish			
Standard			**Standard**
HP	High Mechanical Polish, $15R_a$ or better		★
Thermowell Material Certification			
Standard			**Standard**
Q8	Material Certification		★
Surface Finish Certification			
Standard			**Standard**
Q16	Surface Finish Certification		★
Assemble to Options			
Standard			**Standard**
XA(8)	Assemble connection head or transmitter to a sensor assembly (PTFE paste where appropriate, fully wired.)		★

(1) Only available in immersion lengths between 1-in. and 2-in.

(2) Only available with Tri-Clamp O.D. tube size 1/2 to 3/4-in. (Endcap type code L050).

(3) Only available with Sensor lead Wire Termination code N (sensor only).

(4) Only available in U lengths of 2.0, 2.5, or 3.0 inches.

(5) Standard configuration with best delivery.

(6) Only available in sensor type code 30, 31, 32, 33

(7) If ordering a Mini General Purpose or Mini Spring Loaded Sensor (Sensor Type codes 30, 31, 32, 33, or 41) with Electropolishing, High Mechanical Polish (Option code HP) is also required.

(8) If ordering option code XA with a transmitter, specify the same option on the transmitter model code.

Ordering Example

	Model	Lead Wire Termination	Sensor Type	Immersion Length	Endcap Type, Tube Size	Additional Options
Typical Model Number	0068Q	N	11	U050	L150	V2

SERIES 58C PLATINUM RTD

Rosemount Series 58C sensors are available in 12-, 24-, 36-, and 48-inch (X) lengths and may be shortened to any desired length with an ordinary tubing cutter. This cut-to-fit feature eliminates the need to stock a large selection of sensors in many specific lengths. Table 15 shows the interchangeability of the Series 58C Sensor.

TABLE 15. Series 58C Interchangeability (IEC 751 Class B)

±0.55 °C (±0.99 °F) at –50 °C (–58 °F)
±0.30 °C (±0.54 °F) at 0 °C (32 °F)
±0.80 °C (±1.44 °F) at 100 °C (212 °F)
±1.30 °C (±2.34 °F) at 200 °C (392 °F)

Specifications

Performance Specifications

Temperature Range

–50 to 200 °C (–58 to 392 °F)

Maximum Hysteresis

±0.09% of operating temperature range.

Stability

±0.035% maximum ice-point resistance shift following 1,000 hours at maximum specified temperature (200 °C).

Insulation Resistance

500×10^6 ohms minimum insulation resistance when measured at 50 V dc at room temperature.

Environmental Specifications

Humidity Limits

No permanent rear seal is installed

Quality Assurance

Each sensor is subjected to a resistance accuracy test at 0 °C and an insulation resistance test

Physical Specifications

Sheath Material

316 SST

Lead Wires

PTFE-insulated, nickel-coated, 24-gauge stranded copper wire

Dimensional Drawings

Series 58C Sensor

Do not cut all the way through the sensor sheath when cutting the sensor to length. Damage to the sensor wires could result. To prevent damage to the sensor wires, score the sheath considerably with a tubing cutter and gently break off the excess.

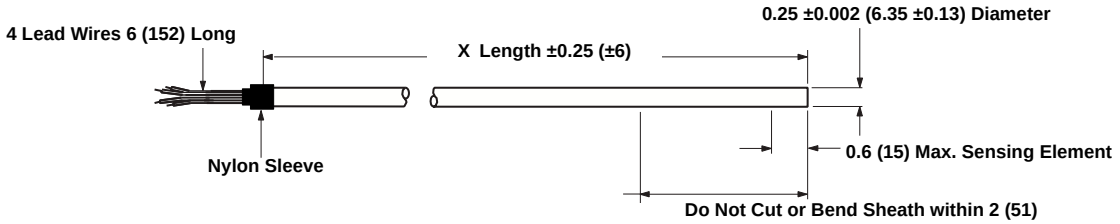

Option Code SNN Spring-Loaded Fitting 303 SST. 1/2–14 ANPT

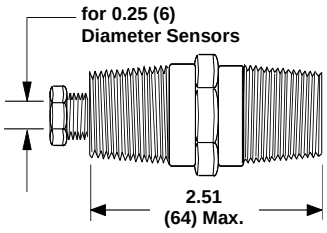

Option Codes C01, C02, Swagelok Compression Fitting 316 SST. 1/2–14 ANPT

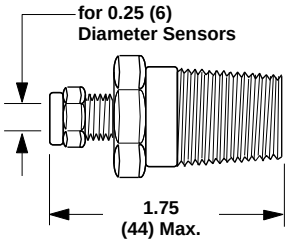

Dimensions are in inches (millimeters)

Ordering Information

TABLE 16. Series 58C Cut-to-Fit RTD Sensors
★ The Standard offering represents the most common options. The starred options (★) should be selected for best delivery.
The Expanded offering is subject to additional delivery lead time.

Model	Product Description	
0058C	Platinum Resistance Temperature Sensor	
Sensor Lead Wire Termination		
Standard		**Standard**
D	Rosemount Aluminum Connection Head with 1/2-in. Entries	★
R	Aluminum Connection Head, Six Terminals, Flat Cover, Unpainted	★
T	Aluminum Connection Head, Six Terminals, Extended Cover, Unpainted	★
P	Aluminum Connection Head, Six Terminals, Flat Cover, Painted	★
L	Aluminum Connection Head, Six Terminals, Extended Cover, Painted	★
N	Sensor only with 6-in. Teflon® -insulated, 22-gauge lead wires	★
Expanded		
C	Polypropylene Connection Head	
G	Rosemount SST Connection with 1/2-in. Entries	
Sensor Immersion Length		
Standard		**Standard**
1200	12 in.	★
2400	24 in.	★
3600	36 in.	★
4800	48 in.	★
Mounting Adapter		
Standard		**Standard**
NNN	None	★
C01(1)	One-compression fitting 1/2–14 ANPT	★
C02(1)	Two-compression fittings 1/2–14 ANPT	★
SNN	Spring-loaded fitting 1/2–14 ANPT	★

(1) The only difference between C01 and C02 is that the C01 includes one fitting while the C02 option includes two fittings.

Ordering Example

Typical Model Number

Model	Lead Wire Termination	Sensor Length	Mounting Adapter
0058C	R	1200	SNN

TABLE 17. Series 58C Spare Parts List

(specify spare part number separately when ordering mounting adapters)

Mounting Adapters	Option Code	Spare Part Number
Compression fitting 1/2–14 ANPT	C01 and C02	C07961-0008
Spring loaded fitting 1/2–14 ANPT	SNN	00058-0010-0001

SERIES 183 THERMOCOUPLE

Rosemount Series 183 Thermocouple sensors measure from –180 to 1150 °C (–292 to 2102 °F).

Construction

The Series 183 Thermocouples are manufactured using ISA Type J, K, E, or T wire with “special limits of error” accuracy. The junction of these wires is fusion-welded to form a pure joint, to maintain the integrity of the circuit, and to ensure the highest accuracy. Grounded junctions are available for improved response time and good thermal contact with protection from the environment. The ungrounded and isolated junctions provide electrical isolation from the sensor sheath (see Figure 11).

Rosemount thermocouples are encased in a protective metal sheath. The sheath material is 304 SST for types J, E, and T, used at temperatures up to 871 °C and Inconel for type K, used at temperatures up to 1150 °C. Metallic oxide insulation is compacted into the sheath to mechanically support and electrically insulate the thermocouple wire. See Table 22 for more information on the different types of thermocouples.

FIGURE 11. Series 183 Junction Configurations

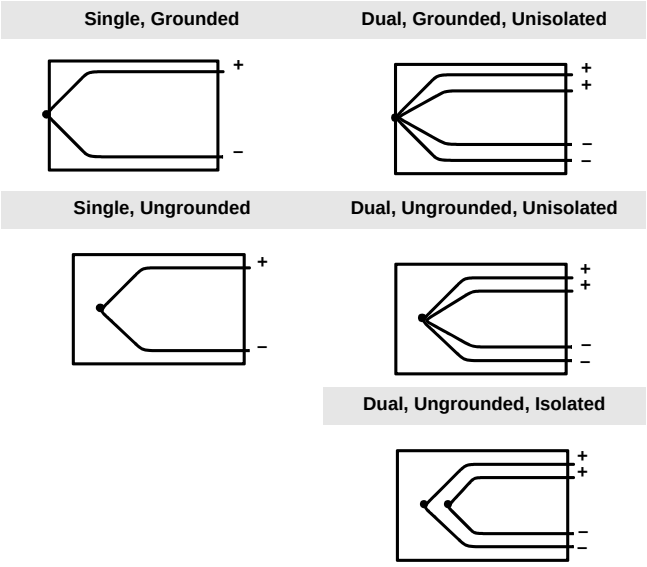

FIGURE 12. Series 183 Lead Wire Configurations

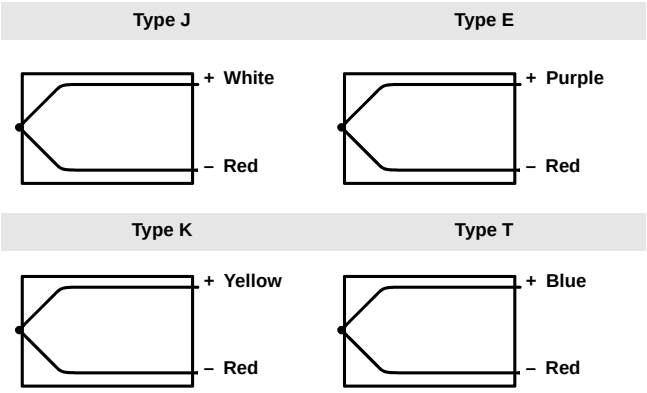

Specifications

Performance Specifications

The thermoelectric current relationship in a thermocouple is standardized and defined by ASTM E-230. All Series 183 Thermocouples conform to these standards with “special limits of error” accuracy. The particular characteristics of each ISA type thermocouple are outlined in Table 22.

Physical

Sheath Material

304 SST for types J, E, and T (used at temperatures up to 871 °C). Inconel for type K (used at temperatures up to 1150 °C).

Lead Wires

Thermocouple, internal—16 AWG solid wire (max), 18 AWG solid wire (min.). External lead wires—20 AWG wire, PTFE-insulated. Color coded per lead wire configuration schematic shown in Figure 12.

Identification Data

The model and serial numbers and up to six lines of permanent tagging information are etched on each sensor. Stainless steel tags are available upon request.

Weight

Capsule sensors: 5 ounces. General-purpose and spring-loaded sensors: 9 ounces.

Insulation Resistance

100×10^6 ohms minimum insulation resistance when measured at 100 V dc at room temperature.

Enclosure Ratings

When installed properly, Rosemount Series 183 sensors are suitable for indoor and outdoor
NEMA 4X and CSA Enclosure Type 4X installations. See Hazardous Area Approvals for complete installation information.

Ordering Information

TABLE 18. Series 183 Thermocouple Sensor Assemblies WITHOUT Thermowell
★ The Standard offering represents the most common options. The starred options (★) should be selected for best delivery.
The Expanded offering is subject to additional delivery lead time.

Model	Product Description	Available Safety Approvals				
0183	Thermocouple Sensor WITHOUT Thermowell					
Sensor Lead Wire Termination		**FM**	**ATEX**	**CSA**	**SAA**	
Standard						**Standard**
R	Aluminum Connection Head, Six Terminals, Flat Cover, Unpainted	Y	Y	Y	N	★
T	Aluminum Connection Head, Six Terminals, Extended Cover, Unpainted	Y	Y	Y	N	★
P	Aluminum Connection Head, Six Terminals, Flat Cover, Painted	Y	Y	Y	N	★
L	Aluminum Connection Head, Six Terminals, Extended Cover, Painted	Y	Y	Y	N	★
N	Sensor only with 6-in. Teflon®-insulated, 20-gauge lead wires	Y	Y	Y	N	★
D	Rosemount Aluminum Connection Head with 1/2-in. Entries	Y	Y	Y	Y	★
Expanded						
C	Polypropylene Connection Head	N	N	N	N	
G	Rosemount SST Connection Head with 1/2-in. Entries	N	N	N	N	

Sensor Type		**Junction**	
Capsule Sensor(1)(2)			
Standard			**Standard**
01(1)	Single	Grounded	★
02	Dual	Grounded	★
03	Single	Ungrounded	★
04	Dual, Unisolated	Ungrounded	★
05	Dual, Isolated	Ungrounded	★
General Purpose Sensors			
Standard			**Standard**
11	Single	Grounded	★
12	Dual	Grounded	★
13	Single	Ungrounded	★
14	Dual, Unisolated	Ungrounded	★
15	Dual, Isolated	Ungrounded	★
Spring-Loaded Sensors(3)			
Standard			**Standard**
21	Single	Grounded	★
22	Dual	Grounded	★
23	Single	Ungrounded	★
24	Dual, Unisolated	Ungrounded	★
25	Dual, Isolated	Ungrounded	★
Bayonet Spring-Loaded Sensors(4)(5)			★
Expanded			
31	Single	Grounded	
32	Dual	Grounded	
33	Single	Ungrounded	
34	Dual, Unisolated	Ungrounded	
35	Dual, Isolated	Ungrounded	
Thermocouple Type		**Temperature Range**	
Standard			**Standard**
J2	J	0 to 760 °C (32 to 1400 °F)	★
K2	K	0 to 1150 °C (32 to 2102 °F)	★
E2	E	0 to 871 °C (32 to 1600°F)	★
T2	T	–180 to 371 °C (–292 to 700 °F)	★
Extension Type		**Material**	
Standard			**Standard**
A(6)	Nipple Coupling	SST	★
C(6)	Nipple Union	SST	★
N	None (Use with extension length option code 00)		★

TABLE 18. Series 183 Thermocouple Sensor Assemblies WITHOUT Thermowell
★ The Standard offering represents the most common options. The starred options (★) should be selected for best delivery.
The Expanded offering is subject to additional delivery lead time.

Extension Length (E)			
Standard			**Standard**
00	0.0 in.		★
30	3.0 in.	(X) sensor length = (E) extension length + (L) thermowell length minus 0.25 in. (see Figure 4.)	★
60	6.0 in.		★
Thermowell Material			
Standard			**Standard**
N	No thermowell required		★
Code	**Sensor/Immersion Length (U length in inches)**		
Standard			**Standard**
020	2.0-in.		★
025	2.5-in.		★
030	3.0-in.		★
035	3.5-in.		★
040	4.0-in.		★
045	4.5-in.		★
050	5.0-in.		★
055	5.5-in.		★
060	6.0-in.		★
065	6.5-in.		★
070	7.0-in.		★
075	7.5-in.		★
080	8.0-in.		★
085	8.5-in.		★
090	9.0-in.		★
095	9.5-in.		★
100	10.0-in.		★
105	10.5-in.		★
110	11.0-in.		★
115	11.5-in.		★
120	12.0-in.		★
125	12.5-in.		★
130	13.0-in.		★
135	13.5-in.		★
140	14.0-in.		★
145	14.5-in.		★
150	15.0-in.		★
155	15.5-in.		★
160	16.0-in.		★
165	16.5-in.		★
170	17.0-in.		★
175	17.5-in.		★
180	18.0-in.		★
185	18.5-in.		★
190	19.0-in.		★
195	19.5-in.		★
200	20.0-in.		★
205	20.5-in.		★
210	21.0-in.		★
215	21.5-in.		★
220	22.0-in.		★
225	22.5-in.		★
230	23.0-in.		★
235	23.5-in.		★

TABLE 18. Series 183 Thermocouple Sensor Assemblies WITHOUT Thermowell
★ The Standard offering represents the most common options. The starred options (★) should be selected for best delivery.
The Expanded offering is subject to additional delivery lead time.

240	24.0-in.	★
245	24.5-in.	★
250	25.0-in.	★
260	26.0-in.	★
270	27.0-in.	★
280	28.0-in.	★
290	29.0-in.	★
300	30.0-in.	★
310	31.0-in.	★
320	32.0-in.	★
330	33.0-in.	★
340	34.0-in.	★
350	35.0-in.	★
360	36.0-in.	★
370	37.0-in.	★
380	38.0-in.	★
390	39.0-in.	★
400	40.0-in.	★
410	41.0-in.	★
420	42.0-in.	★
430	43.0-in.	★
440	44.0-in.	★
450	45.0-in.	★
460	46.0-in.	★
470	47.0-in.	★
480	48.0-in.	★

Options (Include with selected model number)

Product Certifications		
Standard		**Standard**
E5	FM Explosion-proof approval (See Figure 26)	★
E6	CSA Explosion-proof approval (See Figure 27)	★
E7(7)	SAA Flameproof approval (See Figure 30)	★
E1(8)	ATEX Flameproof approval (See Figure 29)	★
Mounting Adapters, Lead Wire Extensions, Connectors, and Seals		
Standard		**Standard**
M5-M7	Mounting adapters	★
Assembly Options		
Standard		**Standard**
XA(9)	Assemble connection head or transmitter to a sensor assembly	★

(1) This option must be used with Sensor Lead Wire Termination code N and is not available with assembly options XA.

(2) Cannot be used with approval option codes E1, E5, E6, or E7. See "Mounting Adapters for Series 58, 68, 78, and 183" on page Temperature-66.

(3) Spring-loaded sensors must be installed in a thermowell assembly to meet the requirement option code E6.

(4) This option is not available with explosion-proof approval option code E6.

(5) Bayonet spring-loaded style is available to 45-inches but is not available with Sensor Lead Wire Termination codes R, P, or W.

(6) Codes A and C must be used with an extension length. Additional non-standard (E) lengths are available in 1/2-in. increments from 2.5 to 9-in.

(7) SAA Flameproof approvals only applicable if installed with a Rosemount 248, 644, or 3144 transmitter.

(8) ATEX Flameproof approval is only applicable if ordered with Sensor Lead Wire Terminator code D, R, P. T. or L (Rosemount connection head) or installed with Rosemount 248, 644, or 3144P transmitters.

(9) If ordering option code XA with a transmitter, specify the same option on the transmitter model code.

TABLE 19. Ordering Example

Typical Model Number	Model	Lead Wire Termination	Sensor Type	ISA Type	Extension Type	Extension Length	Thermowell Code	Immersion Length	Additional Options
	0183	N	11	J2	N	00	N	045	E5

Ordering Information

TABLE 20. Series 183 Thermocouple Sensor Assemblies WITH Thermowell

★ The Standard offering represents the most common options. The starred options (★) should be selected for best delivery. The Expanded offering is subject to additional delivery lead time.

Model	Product Description	Available Safety Approvals					
0183	Thermocouple Sensor WITH Thermowell						
Sensor Lead Wire Termination		**FM**	**ATEX**	**CSA**	**SAA**		
Standard							**Standard**
R	Aluminum Connection Head, Six Terminals, Flat Cover, Unpainted	Y	Y	Y	N		★
T	Aluminum Connection Head, Six Terminals, Extended Cover, Unpainted	Y	Y	Y	N		★
P	Aluminum Connection Head, Six Terminals, Flat Cover, Painted	Y	Y	Y	N		★
L	Aluminum Connection Head, Six Terminals, Extended Cover, Painted	Y	Y	Y	N		★
N	Sensor only with 6-in. Teflon®-insulated, 22-gauge lead wires	Y	Y	Y	N		★
D	Rosemount Aluminum Connection Head with 1/2-in. Entries	Y	Y	Y	Y		★
Expanded							
C	Polypropylene Connection Head	N	N	N	N		
G	Rosemount SST Connection Head with 1/2-in. Entries	N	N	N	N		
Sensor Type		**Junction**					
General-Purpose Sensors							
Standard							**Standard**
11	Single	Grounded					★
12	Dual	Grounded					★
13	Single	Ungrounded					★
14	Dual, Unisolated	Ungrounded					★
15	Dual, Isolated						★
Spring-Loaded Sensors							
Standard							**Standard**
21	Single	Grounded					★
22	Dual	Grounded					★
23	Single	Ungrounded					★
24	Dual, Unisolated	Ungrounded					★
25	Dual, Isolated	Ungrounded					★
Bayonet Spring-Loaded Sensors(1)(2)							
Expanded							
31	Single	Grounded					
32	Dual	Grounded					
33	Single	Ungrounded					
34	Dual, Unisolated	Ungrounded					
35	Dual, Isolated	Ungrounded					
Thermocouple Type		**Temperature Range**					
Standard							**Standard**
J2	J	0 to 760 °C (32 to 1400 °F)					★
K2	K	0 to 1150 °C (32 to 2102 °F)					★
E2	E	0 to 871 °C (32 to 1600°F)					★
T2	T	–180 to 371 °C (–292 to 700 °F)					★
Extension Type		**Material**					
Standard							**Standard**
A(3)	Nipple Coupling	SST					★
C(3)	Nipple Union	SST					★
N	None	(Use with extension length option code 00)					★
Extension Length (E)							
Standard							**Standard**
00	0.0 in.						★
30	3.0 in.						★
60	6.0 in.						★
Thermowell Material							
Standard							**Standard**
A	Type 316 SST(4)						★
B	Type 304 SST						★
C	Carbon Steel						★

TABLE 20. Series 183 Thermocouple Sensor Assemblies WITH Thermowell
★ The Standard offering represents the most common options. The starred options (★) should be selected for best delivery.
The Expanded offering is subject to additional delivery lead time.

D	316L SST			★
E	304L SST			
Expanded				
F	Alloy 20			
G	Alloy 400			
H	Alloy 600			
J	Alloy C-276			
L	Alloy B			
M	304 SST with Teflon (PTFE) coating			
P	Chrome Molybdenum F22			
R	Nickel 200			
T	Titanium			
U[5]	316 SST with Tantalum Sheath			
V	310 SST			
W	321 SST			
Z	Chrome Molybdenum F11			
Sensor/Immersion Length (U[6] length in inches)		**(L) Length in Inches**	**T[7] Length in Inches**	
Standard				**Standard**
015[8]	1.5-in.	4.0-in.	1.0-in.	★
020[6]	2.0-in.	4.0-in.	0.5-in.	★
025[6]	2.5-in.	4.0-in.	0.0-in.	★
030	3.0-in.	6.0-in.	1.5-in.	★
035	3.5-in.	6.0-in.	1.0-in.	★
040	4.0-in.	6.0-in.	0.5-in.	★
045	4.5-in.	6.0-in.	0.0-in.	★
050	5.0-in.	9.0-in.	2.5-in.	★
055	5.5-in.	9.0-in.	2.0-in.	★
060	6.0-in.	9.0-in.	1.5-in.	★
065	6.5-in.	9.0-in.	1.0-in.	★
070	7.0-in.	9.0-in.	0.5-in.	★
075	7.5-in.	9.0-in.	0.0-in.	★
080	8.0-in.	12.0-in.	2.5-in.	★
085	8.5-in.	12.0-in.	2.0-in.	★
090	9.0-in.	12.0-in.	1.5-in.	★
095	9.5-in.	12.0-in.	1.0-in.	★
100	10.0-in.	12.0-in.	0.5-in.	★
105	10.5-in.	12.0-in.	0.0-in.	★
110	11.0-in.	15.0-in.	2.5-in.	★
115	11.5-in.	15.0-in.	2.0-in.	★
120	12.0-in.	15.0-in.	1.5-in.	★
125	12.5-in.	15.0-in.	1.0-in.	★
130	13.0-in.	15.0-in.	0.5-in.	★
135	13.5-in.	15.0-in.	0.0-in.	★
140	14.0-in.	18.0-in.	2.5-in.	★
145	14.5-in.	18.0-in.	2.0-in.	★
150	15.0-in.	18.0-in.	1.5-in.	★
155	15.5-in.	18.0-in.	1.0-in.	★
160	16.0-in.	18.0-in.	0.5-in.	★
165	16.5-in.	18.0-in.	0.0-in.	★
170	17.0-in.	21.0-in.	2.5-in.	★
175	17.5-in.	21.0-in.	2.0-in.	★
180	18.0-in.	21.0-in.	1.5-in.	★
185	18.5-in.	21.0-in.	1.0-in.	★
190	19.0-in.	21.0-in.	0.5-in.	★
195	19.5-in.	21.0-in.	0.0-in.	★
200	20.0-in.	24.0-in.	2.5-in.	★
205	20.5-in.	24.0-in.	2.0-in.	★
210	21.0-in.	24.0-in.	1.5-in.	★
215	21.5-in.	24.0-in.	1.0-in.	★

TABLE 20. Series 183 Thermocouple Sensor Assemblies WITH Thermowell
★ The Standard offering represents the most common options. The starred options (★) should be selected for best delivery.
The Expanded offering is subject to additional delivery lead time.

220	22.0-in.	24.0-in.	0.5-in.	★
225	22.5-in.	24.0-in.	0.0-in.	★
Thermowell Style		**Mounting**	**Stem**	
Standard				**Standard**
T20(4)	Threaded	1/2-14 ANPT	Stepped	★
T22(4)	Threaded	3/4-14 ANPT	Stepped	★
T24(4)	Threaded	1-11.5 ANPT	Stepped	★
T26	Threaded	3/4-14 ANPT	Tapered	★
T28	Threaded	1-11.5 ANPT	Tapered	★
T30	Threaded	1 1/2-11 ANPT	Tapered	★
T32	Threaded	1/2-14 ANPT	Straight	★
T34	Threaded	3/4-14 ANPT	Straight	★
T36	Threaded	1-11.5 ANPT	Straight	★
T38	Threaded	3/4-14 ANPT	Straight	★
T44	Threaded	1/2-14 ANPT	Tapered	★
W38	Welded	3/4-in. pipe	Stepped	★
W40	Welded	1-in. pipe	Stepped	★
W42	Welded	3/4-in. pipe	Tapered	★
W44	Welded	1-in. pipe	Tapered	★
W46	Welded	1 1/4-in. pipe	Tapered	★
W48	Welded	3/4-in. pipe	Straight	★
W50	Welded	1-in. pipe	Straight	★
F10	Flanged	2-in., Class 150	Straight	★
F12	Flanged	3-in., Class 150	Straight	★
F52	Flanged	1-in., Class 150	Stepped	★
F54	Flanged	1 1/2-in., Class 150	Stepped	★
F56	Flanged	2-in., Class 150	Stepped	★
F58	Flanged	1-in., Class 150	Tapered	★
F60	Flanged	1 1/2-in., Class 150	Tapered	★
F62	Flanged	2-in. Class 150	Tapered	★
F64	Flanged	1-in., Class 150	Straight	★
F66	Flanged	1 1/2-in., Class 150	Straight	★
F70	Flanged	1-in., Class 300	Stepped	★
F72	Flanged	1 1/2-in., Class 300	Stepped	★
F74	Flanged	2-in., Class 300	Stepped	★
F76	Flanged	1-in., Class 300	Tapered	★
F78	Flanged	1 1/2-in., Class 300	Tapered	★
F80	Flanged	2-in., Class 300	Tapered	★
F82	Flanged	1-in., Class 300	Straight	★
F84	Flanged	1 1/2-in., Class 300	Straight	★
F86	Flanged	2-in., Class 300	Straight	★
F88(9)	Flanged	1-in., Class 600	Stepped	★
F90(9)	Flanged	1 1/2-in., Class 600	Stepped	★
F92(9)	Flanged	2-in., Class 600	Stepped	★
F94(9)	Flanged	1-in., Class 600	Tapered	★
F96(9)	Flanged	1 1/2-in., Class 600	Tapered	★
F98(9)	Flanged	2-in., Class 600	Tapered	★
F02(9)	Flanged	1-in., Class 600	Straight	★
F04(9)	Flanged	1 1/2-in., Class 600	Straight	★
F06(9)	Flanged	2-in., Class 600	Straight	★
F16(9)	Flanged	1 1/2-in., Class 900	Tapered	★
F34(9)	Flanged	1 1/2-in., Class 1500	Tapered	★
F24(9)	Flanged	2-in., Class 1500	Tapered	★
F08(9)	Flanged	1 1/2-in., Class 2500	Tapered	★
Q02(10)	Sanitary, Tri-Clamp	1-in., Tri-Clamp	Stepped	★
Q04c	Sanitary, Tri-Clamp	1 1/2-in., Tri-Clamp	Stepped	★
Q06(9)	Sanitary, Tri-Clamp	2-in., Tri-Clamp	Stepped	★
Q08(9)	Sanitary, Tri-Clamp	3-in., Tri-Clamp	Stepped	★

TABLE 20. Series 183 Thermocouple Sensor Assemblies WITH Thermowell
★ The Standard offering represents the most common options. The starred options (★) should be selected for best delivery.
The Expanded offering is subject to additional delivery lead time.

Q20(9)	Sanitary, Tri-Clamp	3/4-in., Tri-Clamp	Straight	★
Q22(9)	Sanitary, Tri-Clamp	1-in., Tri-Clamp	Straight	★
Q24(9)	Sanitary, Tri-Clamp	1 1/2-in., Tri-Clamp	Straight	★
Q26(9)	Sanitary, Tri-Clamp	2-in., Tri-Clamp	Straight	★
Q28(9)	Sanitary, Tri-Clamp	3-in., Tri-Clamp	Straight	★

Options (Include with selected model number)

Product Certifications		
Standard		**Standard**
E5	FM Explosion-proof approval (See Figure 26)	★
E6	CSA Explosion-proof approval (See Figure 27)	★
E7(11)	SAA Flameproof approval (See Figure 30)	★
Mounting Adapters		
Standard		**Standard**
M5-M7	Mounting adapter: Sensor Compression Fitting: M5 = 1/8-27 NPT, M6 = 1/4-18 NPT, M7 = 1/2-14 NPT	★
Special External Pressure Test		
Standard		**Standard**
R01	Special External Pressure Test	★
Material Certification		
Standard		**Standard**
Q8	Material Certification	★
Dye Penetration Test		
Standard		**Standard**
R03	Dye Penetration Test	★
Thermowell Special Cleaning		
Standard		**Standard**
R04	Thermowell Special Cleaning	★
NACE Approval		
Standard		**Standard**
R05	NACE Approval	★
SST Plug and Chain		
Standard		**Standard**
R06	SST Plug and Chain	★
Full Penetration Weld		
Standard		**Standard**
R07(12)	Full Penetration Weld	★
Thermowell Concentric Serrations		
Standard		**Standard**
R09(12)(13)	Concentric Serrations of Thermowell Flange Face	★
Flat Faced Flange		
Standard		**Standard**
R10 (11)(12)	Flat Faced Flange	★
Vent Hole		
Standard		**Standard**
R11	Vent Hole	★
Thermowell Xray		
Standard		**Standard**
R12	Thermowell Xray	★
Special Surface Finish		
Standard		**Standard**
R14	Special Surface Finish (12 Ra Maximum “U” length = 22.5-in.)	★
Ring Joint Flange		
Standard		**Standard**
R16(11)(12)	Ring joint flange (Not available with 0-in. (T) length)	★
Electropolish		
Standard		**Standard**
R20	Electropolish	★
Wake Frequency		
Standard		**Standard**
R21	Wake Frequency-Thermowell Strength Calculation	★

TABLE 20. Series 183 Thermocouple Sensor Assemblies WITH Thermowell
★ The Standard offering represents the most common options. The starred options (★) should be selected for best delivery.
The Expanded offering is subject to additional delivery lead time.

Internal Pressure Test		
Standard		**Standard**
R22	Internal Pressure Test	★
Brass Plug & Chain		
Standard		**Standard**
R23	Brass Plug & Chain	★
Canadian Registration No.		
Expanded		
R24	CRN Marking for British Columbia	
R25	CRN Marking for Alberta	
R26	CRN Marking for Saskatchewan	
R27	CRN Marking for Manitoba	
R28	CRN Marking for Ontario	
R29	CRN Marking for Quebec	
R30	CRN Marking for New Brunswick	
R31	CRN Marking for Nova Scotia	
R32	CRN Marking for Prince Edward Island	
R33	CRN Marking for Yukon Territory	
R34	CRN Marking for Northwest Territory	
R35	CRN Marking for Nunavut	
R36	CRN Marking for Newfoundland and Labrador	
Twell From Hex Stock		
Expanded		
R37	Thermowell from Hex stock	
Assemble to Options		
Standard		**Standard**
XA(14)	Assemble connection head or transmitter to a sensor assembly	★

(1) This option is not available with explosion-proof approval option codes E1, E5, E6, or E7.
(2) Bayonet spring-loaded style available to 45 inches. Codes 31 - 35 are not available with Sensor Lead Wire Termination codes R or P.
(3) Codes A and C must be used with an extension length. Additional non-standard (E) lengths are available in 1/2-in. increments from 2.5 to 9-in.
(4) Standard configuration with best delivery.
(5) Available only with straight stem thermowells.
(6) Thermowells with an overall length ("U" + "T" + 1.75-in.) of 36-in. or less are machined from solid barstock. Thermowells with an overall length larger than 42-in. will be constructed using a welded 3-piece design and are available only with a stepped stem style.
(7) For additional (T) lengths, see Table 28 on page Temperature-71.
(8) Straight or Tapered stem thermowells only.
(9) Cannot be used with 0-in. (T) length. F08 cannot be used with 0- or 1/2-in. (T) length
(10) Limited to 24" immersion length and 316 or 304 SST materials only.
(11) SAA Flameproof approvals only applicable if installed with a Rosemount 248, 644, or 3144P transmitter.
(12) Available on flanged thermowells only.
(13) Only one flange face option allowed.
(14) If ordering option code XA with a transmitter, specify the same option on the transmitter model code.

TABLE 21. Ordering Example

Typical Model Number	Model	Lead Wire Termination	Sensor Type	ISA Type	Extension Type	Extension Length	Material Code	Immersion Length	Mounting Style	Additional Options
	0183	N	21	J2	A	30	A	075	T22	E5

Comparison of Thermocouples

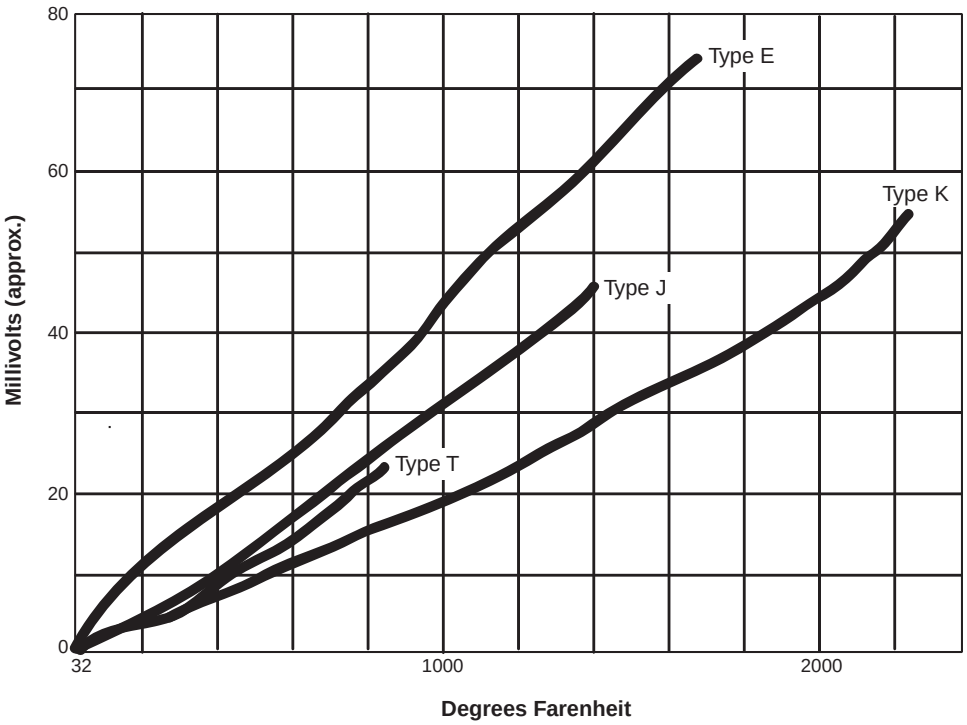

Thermocouple	Conditions for Use
Type J Iron / Constantan	Maximum operating temperature of 760 °C (1400 °F). Used with or without protective tubing where deficiency of free oxygen exists. Protective tube not essential, but desirable for cleanliness and longer service.
Type K Chromel / Alumel	Suitable for extended use in temperature reaching 1150 °C (2102 °F). Use of metal or ceramic protective tube desirable, especially in reducing atmospheres. in oxidizing atmospheres, protective tubing necessary only to promote cleanliness and longer service.
Type E Chromel / Constantan	Suitable for use at temperature p to 900 °C (1652 °F) in vacuum r inert, mildly oxidizing or reducing atmosphere. Not subject to corrosion at cryogenic temperatures. Has highest EMF output per degree of all commonly used thermocouples.
Type T Copper /Constantan	Operating temperature range of –180 to 371 °C (–292 to 700 °F). Use in either oxidizing or reducing atmospheres. Protective tubing necessary only to promote cleanliness and longer service. Stable at lower temperature. Superior for a wide variety of uses in cryogenic temperatures.

TABLE 22. Characteristics of Series 183 Thermocouple Types

ISA Thermocouple Types	Thermocouple Wire Alloys	Temperature Range		Limits of Error (Interchangeability)
		°C	°F	
J	Iron/Constantan	0 to 760	32 to 1400	±1.1 °C or ±0.4% of measured temperature, whichever is greater
K	Chromel/Alumel	0 to 1150	32 to 2102	±1.1 °C or ±0.4% of measured temperature, whichever is greater
E	Chromel/Constantan	0 to 871	32 to 1600	±1.0 °C or ±0.4% of measured temperature, whichever is greater
T	Copper/Constantan	–180 to 0	–292 to 32	±1.0 °C or ±1.5% of measured temperature, whichever is greater
		0 to 371	32 to 700	±0.5 °C or ±0.4% of measured temperature, whichever is greater

Calibration

CALIBRATION OPTIONS

Sensor calibration may be required for input to quality systems, or for control system enhancement. More frequently, it is used to improve the overall temperature measurement performance by matching the sensor to a temperature transmitter.
Transmitter-Sensor matching is available for RTD sensors used with Rosemount 644, 3144P, and 3244MV temperature transmitters where the inherent stability and repeatability of the RTD technology is well established.

Transmitter-Sensor Matching Using Callendar-Van Dusen Constants

Significant temperature measurement accuracy improvement can be attained using a temperature sensor that is matched to a temperature transmitter. This matching process entails *teaching* the temperature transmitter the relationship between resistance and temperature for a specific RTD sensor. This relationship, approximated by the Callendar-Van Dusen equation, described as:

$R_t = R_o + R_o\alpha[t - \delta(0.01t - 1)(0.01t) - \beta(0.01t - 1)(0.01t)^3]$, where:

R_t = Resistance (ohms) at Temperature t (°C)
R_o = Sensor-Specific Constant (Resistance at t = 0 °C)
α =Sensor-Specific Constant
δ =Sensor-Specific Constant
β =Sensor-Specific Constant (0 at t > 0 °C, 0.11 at t < 0°C)

The exact values for R_0, α, δ, β, – known as Callendar-Van Dusen (CVD) constants – are specific to each RTD sensor, and are established by testing each individual sensor at various temperatures.

The calibration temperature values using the CVD equation are divided into two major temperature areas: above 0 °C and below 0 °C. The calibration for the temperature range between 0 and 660 °C is obtained from the following formula:

$$R_t = R_0\left\{1 + \alpha\left[t - \delta\left(\frac{t}{100}\right)\left(\frac{t}{100} - 1\right)\right]\right\}$$

Note that this is a modification of the fourth-order CVD equation where $\beta = 0$ for temperatures greater than 0 °C. Since this modified equation is a second-order degree equation, at least three distinct temperature values are needed in order to curve fit the behavior of the RTD. For the temperature range from 0 to 100 °C only these two end points are used, and an approximation is made to render the constants.

Once the sensor-specific constants are entered, the transmitter uses them to generate a custom curve to best describe the relationship between resistance and temperature for the particular sensor and transmitter system. Matching a Series 68 or 78 RTD sensor to a 644, 3144P, and 3244MV transmitter typically results in a 3- or 4-fold improvement in temperature measurement accuracy for the total system. This substantial system accuracy improvement is realized as a result of the transmitter's ability to use the sensor's *actual* resistance-vs.-temperature curve instead of an *ideal* curve.

An example of the benefits of using the sensor matching capability of a Rosemount 3144P Temperature transmitter along with a matched Series 68 RTD sensor are shown in Typical Transmitter-Sensor Matching Uncertainty Improvements.

Calibration Uncertainty

Calibration uncertainties of the lab are equal to or better than $^1/_{10}$ IEC 751 Class B interchangeability:

$$\textbf{Uncertainty} = 0.03 + 0.0005 \times |t|$$

$|t|$ = *absolute value of temperature in °C*

TYPICAL TRANSMITTER-SENSOR MATCHING UNCERTAINTY IMPROVEMENTS

Transmitter: 3144 (has built-in sensor matching capabilities), span of 1 to 200 °C, accuracy = 0.1 °C)

Sensor: Series 68 RTD

Callendar van Dusen Option: V2
Process Temperature: 150 °C

Temperature		Sensor Interchangeability Error		Total Calibrated Sensor Uncertainty(1)	
°C	°F	°C	°F	°C	°F
0	32	±0.30	±0.54	±0.10	±0.18
50	122	±0.55	±0.99	±0.17	±0.31
100	212	±0.80	±1.44	±0.22	±0.40
150	302	±1.05	±1.89	±0.18	±0.32
200	392	±1.30	±2.34	±0.16	±0.29

(1) Includes calibration uncertainties of the lab, hysteresis, and repeatability.

System Uncertainty Comparison at 150 °C:

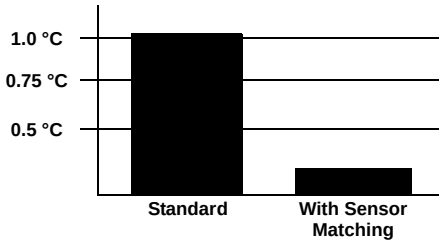

Standard 68 Sensor	
Rosemount 3144:	± 0.10 °C
Standard Series 68 RTD:	± 1.05 °C
Total System(1):	± 1.05 °C
68 Sensor with V2 Option	
Rosemount 3144:	± 0.10 °C
Standard Series 68 RTD:	± 0.18 °C
Total System(1):	± 0.21 °C

(1) Calculated using RSS statistical method:

$$SystemAccuracy = \sqrt{(TransmitterAccuracy)^2 + (SensorAccuracy)^2}$$

ORDERING INFORMATION

Sensor Characterization (Calibration) Schedules– Option Code V

Series 68, 68Q, and 78 RTD sensors can be ordered with an option (V1, V2,...V7, see Option Code “V” Callendar-van Dusen Constants), that provides Callendar-Van Dusen constants that are shipped with the sensor. When you order this option, the values of all four sensor-specific constants are physically attached to each sensor with a wire-on tag. Rosemount 644, 3144P, and 3244MV have a unique, built-in sensor matching capability. To use this capability, the four sensor-specific constants are programmed into the 644, 3144P, and 3244MV at the factory by ordering a C2 option on the transmitter, or easily entered and changed in the field using a HART Communicator or AMS. When these values are entered into a Rosemount 644, 3144P, and 3244MV, the sensor and transmitter become *matched.*

Each “V” option is specific to a particular temperature range for a given sensor type (see Option Code “V” Callendar-van Dusen Constants). As with option code X8Q4, the accuracies associated with each option code represent worst-case conditions when the sensor is used over the entire temperature range.

For applications requiring the increased accuracy obtainable through a matched sensor and transmitter, order the appropriate “V” option (seeOption Code “V” Callendar-van Dusen Constants). To ensure optimal performance, select a “V” option such that the sensor’s range of actual operation is between the minimum and maximum calibration points.

The accuracy (uncertainty) of different calibration points varies because each calibration schedule has specific hysteresis and repeatability characteristics. For example, the accuracy of calibration points at 100 °C for options V1 and V2 differs because of the two different temperature ranges.

NOTE
An RTD ordered with the V option is shipped with CVD constants only; it does not include calibration tables.

OPTION CODE “V” CALLENDAR-VAN DUSEN CONSTANTS

Option Code	Temperature Range		Calibration Points		Uncertainty(1) of Calibration Lab		Total Uncertainty(2) of Calibrated Sensor					
							Series 68		Series 78 Standard		Series 78 High Temperature	
	°C	°F	°C	°F	°C	°F	°C	°F	°C	°F	°C	°F
V1(3)	0 to 100	32 to 212	0	32	±0.03	±0.05	±0.06	±0.11	±0.06	±0.11	±0.06	±0.11
			100	212	±0.08	±0.14	±0.10	±0.18	±0.10	±0.18	±0.10	±0.18
V2(3)	0 to 200	32 to 392	0	32	±0.03	±0.05	±0.10	±0.18	±0.09	±0.16	±0.10	±0.18
			100	212	±0.08	±0.14	±0.22	±0.40	±0.15	±0.27	±0.23	±0.41
			200	392	±0.13	±0.23	±0.16	±0.29	±0.15	±0.27	±0.16	±0.29
V3(3)	0 to 400	32 to 752	0	32	±0.03	±0.05	±0.20	±0.29	±0.16	±0.29	±0.20	±0.29
			200	392	±0.13	±0.23	±0.42	±0.76	±0.29	±0.52	±0.44	±0.79
			400	752	±0.23	±0.41	±0.30	±0.54	±0.28	±0.50	±0.30	±0.54
V4(3)(4)	0 to 600	32 to 1112	0	32	±0.03	±0.05	NA	±NA	NA	NA	NA	NA
			200	392	±0.13	±0.23	NA	±NA	NA	NA	NA	NA
			400	752	±0.23	±0.41	NA	±NA	NA	NA	NA	NA
V5(3)	–50 to 100	–58 to 212	0	32	±0.03	±0.05	±0.08	±0.14	±0.06	±0.11	±0.09	±0.16
			100	212	±0.08	±0.14	±0.10	±0.18	±0.10	±0.18	±0.10	±0.18
V6(3)	–50 to 200	–58 to 392	–50	–58	±0.06	±0.10	±0.14	±0.25	±0.11	±0.20	±0.14	±0.25
			0	32	±0.03	±0.05	±0.20	±0.36	±0.14	v0.25	±0.21	±0.38
			100	212	±0.08	±0.14	±0.26	±0.47	±0.18	±0.32	±0.27	±0.49
			200	392	±0.13	±0.23	±0.18	±0.32	±0.16	±0.29	±0.17	±0.3
V7(3)	–50 to 400	–58 to 752	–50	–58	±0.06	±0.10	±0.23	±0.41	±0.19	±0.34	±0.23	±0.41
			0	32	±0.03	±0.05	±0.31	±0.56	±0.22	±0.40	±0.32	±0.58
			200	392	±0.13	±0.23	±0.46	±0.83	±0.31	±0.56	±0.48	±0.86
			400	752	±0.23	±0.41	±0.32	±0.58	±0.29	±0.52	±0.32	±0.58

(1) Includes only the uncertainly of the lab.

(2) Includes the uncertainty of the lab, hysteresis, and repeatability.

(3) Uncertainties are valid for option code X8Q4 when ordered with the corresponding temperature range. The largest error shown in each temperature range is the worst case error for all points not shown in that range.

(4) Only available with Series 78 High Temperature Sensors 10-in. or longer.

Ordering Information

Specify Sensor Model Number with “V” Option Example								
Sensor Model	0068	N	11	N	00	N	120	V2

FIGURE 13. Typical Sensor Ordered with Option Code V

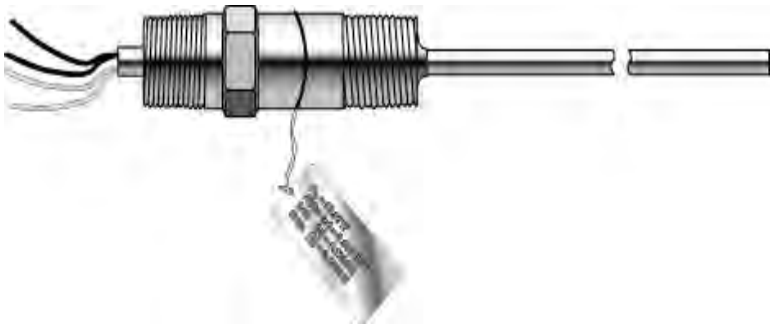

Option Code X8Q4

The X8Q4 option calibrates the sensor to a customer-specified temperature range. The X8Q4 report includes the Callendar-Van Dusen (CVD) constants (R_o, α, δ, β), a resistance-versus-temperature table in one-degree increments, and a graph which includes the maximum errors due to the uncertainty of the calibration equipment, hysteresis, and repeatability. The values in the tables are calculated using Callendar-Van Dusen methodology. Two of the values on this table could be used to perform a two-point trim. The X8Q4 option also provides the CVD constants on a stainless steel tag attached to the sensor.

See Figure 16.

FIGURE 14. Graph of a Typical Two-point Trim

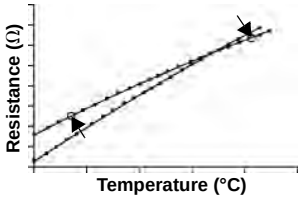

A two-point trim shifts the ideal curve up or down, and changes the slop based on the two characterized points.

Option X8Q4: Sensor Calibrated to a Customer-Specified Temperature Range

When you order an RTD with the X8Q4 option, you must specify a temperature range over which the sensor is to be calibrated. Before specifying the range, take careful note of the sensor temperature limits.

Ordering Example:

Typical Model Number	Model	Lead Wire Termination	Sensor Type	Extension Type	Extension Length	Thermowell Material	Immersion Length	Additional Options
	0068	N	11	N	00	N	045	X8Q4 X8X9Q4

If X8Q4 and X9Q4 are both required, do not repeat the “Q4” code in the model string. Include the following instead:

Calibrate from –10 to 120 °C

Option Code X9Q4

The X9Q4 option calibrates the sensor at a single customer-specified point. A calibration certificate with the resistance value at this point is supplied. This value could be used to perform a one-point trim on the transmitter.All characterizations are traceable to the National Institute of Standards and Technology (NIST). The calibration table is dated and marked with the sensor series and serial number.

See Figure 17.

NOTE
The X9Q4 option can be ordered and used in conjunction with the X8Q4 option.

FIGURE 15. Graph of a Typical One-point Trim

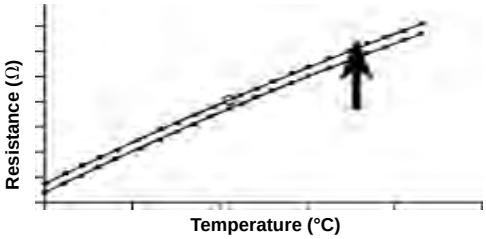

A one-point trim shifts the ideal curve up or down based on the single characterized point.

Option X9Q4: Sensor Calibrated to a Customer-Specified Single Point

When you order an RTD with theX9Q4 option, you must specify a single temperature point at which the sensor is to be calibrated. Before specifying the point, take careful note of the sensor temperature limits.

Ordering Example:

Typical Model Number	Model	Lead Wire Termination	Sensor Type	Extension Type	Extension Length	Thermowell Material	Immersion Length	Additional Options
	0068	N	11	N	00	N	045	X9Q4

If X8Q4 and X9Q4 are both required, do not repeat the “Q4” code in the model string. Include the following instead: X8X9Q4

Calibrate at 50 °C

FIGURE 16. Example of Report Provided with X8Q4 Option

Date Report Printed: 8/15/03

ROSEMOUNT INC.

REPORT OF CALIBRATION
Model Option Code X8Q4

Industrial Platinum Resistance Thermometer (IPRT)
Calibration Schedule 20C

Sensor Serial Number:	915117
Sensor Model:	78
Sales Order Number:	1220333 2

Rosemount Inc.
Customer Central
8200 Market Blvd.
Chanhassen, MN, USA 55317-9687
1-800-999-9307

Page 1 of 5

ROSEMOUNT INC.
Report of Calibration
Industrial Platinum Resistance Thermometer (IPRT)

Callendar – Van Dusen Method Of Temperature Interpolation

$$R_t = R_0\left\{1+\alpha\left[t-\delta\left(\frac{t}{100}\right)\left(\frac{t}{100}-1\right)-\beta\left(\frac{t}{100}-1\right)\left(\frac{t}{100}\right)^3\right]\right\}$$

Where:

R_t = Resistance at temperature t, Ω
R_0 = Resistance at temperature 0°C
t = Temperature, °C
α, β, and δ = Calibration Constants
$\beta = 0$ for $t > 0°C$

Alternate Form Of The Callendar – Van Dusen Interpolation Equation

$$R_t = R_0\left[1+At+Bt^2+Ct^3(t-100)\right]$$

Where:

R_t = Resistance at temperature t, Ω
R_0 = Resistance at temperature 0°C
t = Temperature, °C
A, B, and C = Calibration Constants
$C = 0$ for $t > 0°C$

The Callendar – Van Dusen method of temperature interpolation is the method utilized by the Rosemount Inc. 3144 and 3244 Temperature Transmitters.

Page 2 of 5

ROSEMOUNT INC.

Report of Calibration

Industrial Platinum Resistance Thermometer (IPRT)

Calibration Schedule:	20C	**Sensor Model:**	78
Interpolation Method:	Callendar-Van Dusen	**Sensor Serial Number:**	915117

Calibration Test Points

Temperature (°C)	Resistance (ohms)
0.008	99.981
99.976	138.437

Calibration Constants

Ro= 99.9776	
Alpha= 0.00384767	**A**= 0.00390542
Beta= 0.1110	**B**= -5.7750E-07
Delta= 1.5009	**C**= -4.27092E-12

The graph below displays the uncertainty for the supplied R vs T interpolation method for calibration schedule 20C

CALIBRATION ERROR CURVE 20C: 0°C TO 100°C

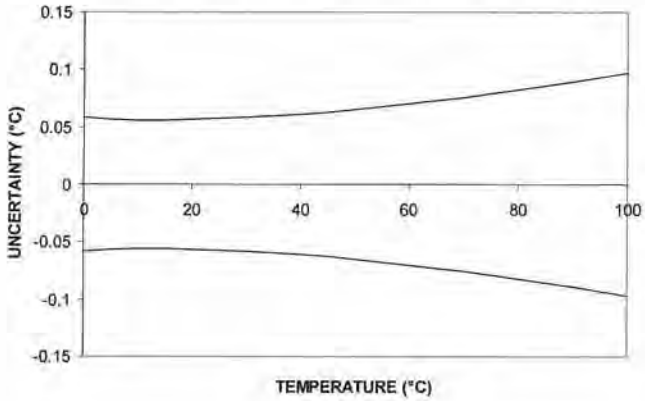

Page 3 of 5

ROSEMOUNT INC.

Report of Calibration

Industrial Platinum Resistance Thermometer (IPRT)

Calibration Schedule: 20C
Interpolation Method: Callendar-Van Dusen

Sensor Model: 78
Sensor Serial Number: 915117

Temp. (°C)	Resistance (Ohms)	Temp. (°C)	Resistance (Ohms)	Temp. (°C)	Resistance (Ohms)	Temp. (°C)	Resistance (Ohms)	Temp. (°C)	Resistance (Ohms)
0	99.978	48	118.586	96	136.929				
1	100.368	49	118.971	97	137.308				
2	100.758	50	119.356	98	137.688				
3	101.148	51	119.741	99	138.067				
4	101.538	52	120.125	100	138.446				
5	101.928	53	120.509						
6	102.318	54	120.894						
7	102.708	55	121.278						
8	103.098	56	121.662						
9	103.487	57	122.046						
10	103.876	58	122.430						
11	104.266	59	122.813						
12	104.655	60	123.197						
13	105.044	61	123.580						
14	105.433	62	123.964						
15	105.821	63	124.347						
16	106.210	64	124.730						
17	106.599	65	125.113						
18	106.987	66	125.496						
19	107.375	67	125.879						
20	107.764	68	126.262						
21	108.152	69	126.644						
22	108.540	70	127.026						
23	108.927	71	127.409						
24	109.315	72	127.791						
25	109.703	73	128.173						
26	110.090	74	128.555						
27	110.478	75	128.937						
28	110.865	76	129.319						
29	111.252	77	129.700						
30	111.639	78	130.082						
31	112.026	79	130.463						
32	112.413	80	130.844						
33	112.800	81	131.226						
34	113.186	82	131.607						
35	113.573	83	131.988						
36	113.959	84	132.368						
37	114.345	85	132.749						
38	114.731	86	133.130						
39	115.117	87	133.510						
40	115.503	88	133.890						
41	115.889	89	134.271						
42	116.275	90	134.651						
43	116.660	91	135.031						
44	117.046	92	135.411						
45	117.431	93	135.790						
46	117.816	94	136.170						
47	118.201	95	136.550						

Page 4 of 5

ROSEMOUNT INC.

Report of Calibration

Industrial Platinum Resistance Thermometer (IPRT)

Calibration Schedule: 20C
Interpolation Method: Callendar-Van Dusen
Sensor Model: 78
Sensor Serial Number: 915117

NIST TRACEABILITY

	Calibration Bath:			
Sensor:	**0°C Bath**	**100°C Bath**		
Primary Standard				
Manufacturer:	Rosemount Aerospace	Rosemount Aerospace		
Model Number:	162CE	162CE		
Serial Number:	4746	4004		
NIST Test Report Number:	836/264032-00	836/262003-99		
Calibration Date:	9-13-00	7/9/99		
Where Calibrated:	NIST	NIST		
Secondary Standard				
Manufacturer:	Rosemount Aerospace	Rosemount Aerospace		
Model Number:	162CE	162CE		
Serial Number:	4155	4173		
Calibration Date:	4/25/01	3/23/00		
Where Calibrated:	Rosemount Aerospace	Rosemount Aerospace		
Industrial PRT				
Manufacturer:	**Rosemount Inc.**			
Sensor Model:	78		**IPRT Calibrated By:**	
Serial Number:	915117		Employee Number: 11411	
Calibration Date:	7/24/03		Blong Lee	
Where Calibrated:	Rosemount Inc., Chanhassen, MN			

ITS-90 Temperature Scale values are utilized in this calibration process and report.

Definitions:

NIST - National Institute of Standards and Technology

ITS-90 - International Temperature Scale, 1990 revision.

Primary Standard - Standard PRT (SPRT) calibrated at NIST.

Secondary Standard - Rosemount Inc.'s Standard PRT (Secondary SPRT), calibrated against the primary standard.

Industrial PRT (IPRT) - The Rosemount model 58, 68, or 78 sensor that is the topic of this report, calibrated against the secondary standard(s) by comparison methodology.

Page 5 of 5

FIGURE 17. Example of Report Provided with X9Q4 Option

Date Report Printed: 8/15/03

ROSEMOUNT INC.

REPORT OF CALIBRATION
Model Option Code X9Q4

Industrial Platinum Resistance Thermometer (IPRT)
Calibration Schedule 212°F

Sensor Serial Number:	912631
Sensor Model:	78
Sales Order Number:	1214169 1

Rosemount Inc.
Customer Central
8200 Market Blvd.
Chanhassen, MN, USA 55317-9687
1-800-999-9307

Page 1 of 2

ROSEMOUNT INC.

Report of Calibration (X9Q4)

Industrial Platinum Resistance Thermometer (IPRT)

Calibration Schedule: 212°F
Sensor Serial Number: 912631

Calibration Test Points

Temperature (°F)	Resistance (ohms)
212.034	138.519

Corrected Results

Temperature	Resistance (ohms)
212.000°F (100.000 °C)	138.512

NIST* TRACEABILITY

Primary Standard		***Industrial PRT***	
Manufacturer:	Rosemount Aerospace	**Manufacturer:**	**Rosemount Inc.**
Model Number:	162CE	**Sensor Model:**	78
Serial Number:	4004	**Serial Number:**	912631
NIST Test Report Number:	836/262003-99	**Calibration Date:**	7/8/03
Calibration Date:	7/9/99	**Where Calibrated:**	Rosemount Inc., Chanhassen, MN
Where Calibrated:	NIST		
Secondary Standard			
Manufacturer:	Rosemount Aerospace	**IPRT Calibrated By:**	
Model Number:	162CE	Employee Number: 11262	
Serial Number:	4173	Jonathon Vought	
Calibration Date:	3/23/00		
Where Calibrated:	Rosemount Aerospace		

ITS-90** Temperature Scale values are utilized in this calibration process and report.

* ***NIST*** - National Institute of Standards and Technology
** ***ITS-90*** - International Temperature Scale, 1990 revision.

Page 2 of 2

TABLE 23. Option Code X9Q4 Calibration Uncertainties for the Series 68 and 78 Standard and High Temperature

Temperature		Uncertainty of Calibration Lab(1)		Total Uncertainty of Calibrated Sensor(2)	
°C	°F	°C	°F	°C	°F
–50	–58	0.06	0.10	0.07	0.13
0	32	0.03	0.05	0.06	0.11
100	212	0.08	0.14	0.09	0.16
200	392	0.13	0.23	0.14	0.25
400	752	0.23	0.41	0.24	0.43

(1) Includes only the uncertainty of the lab.

(2) Includes uncertainty of the lab and repeatability.

TABLE 24. Resistance vs. Temperature

IEC 751 Platinum 100, α = 0.00385 RTD																
°F	Ohms		°F	Ohms		°F	Ohms		°C	Ohms		°C	Ohms		°C	Ohms
–330	18.04		210	138.08		690	235.15		–200	18.52		90	134.71		380	240.18
–320	20.44		220	140.19		700	237.09		–190	22.83		100	138.51		390	243.64
–310	22.83		230	142.29		710	239.02		–180	27.10		110	142.29		400	247.09
–300	25.20		240	144.39		720	240.95		–170	31.34		120	146.07		410	250.53
–290	27.57		250	146.49		730	242.87		–160	35.54		130	149.83		420	253.96
–280	29.93		260	148.58		740	244.79		–150	39.72		140	153.58		430	257.38
–270	32.27		270	150.67		750	246.71		–140	43.88		150	157.33		440	260.78
–260	34.61		280	152.75		760	248.62		–130	48.00		160	161.05		450	264.18
–250	36.94		290	154.83		770	250.53		–120	52.11		170	164.77		460	267.56
–240	39.26		300	156.91		780	252.44		–110	56.19		180	168.48		470	270.93
–230	41.57		310	158.98		790	254.34		–100	60.26		190	172.17		480	274.29
–220	43.88		320	161.05		800	256.24		–90	64.30		200	175.86		490	277.64
–210	46.17		330	163.12		810	258.14		–80	68.33		210	179.53		500	280.98
–200	48.46		340	165.18		820	260.03		–70	72.33		220	183.17		510	284.30
–190	50.74		350	167.24		840	263.80		–60	76.33		230	186.84		520	287.62
–180	53.02		360	169.30		850	265.68		–50	80.31		240	190.47		530	290.92
–170	55.29		370	171.35		860	267.56		–40	84.27		250	194.10		540	294.21
–160	57.55		380	173.40		870	269.44		–30	88.22		260	197.71		550	297.49
–150	59.81		390	175.45		880	271.31		–20	92.16		270	201.31		560	300.74
–140	62.06		400	177.49		890	273.17		–10	96.09		280	204.90		570	304.01
–130	64.30		410	179.53		900	275.04		0	100.00		290	208.48		580	307.25
–120	66.54		420	181.56		910	276.90		10	103.90		300	212.05		590	310.49
–110	68.77		430	183.59		920	278.75		20	107.79		310	215.61		600	313.71
–100	71.00		380	173.40		930	280.61		30	111.67		320	219.15		610	316.92
–90	73.22		390	175.45		940	282.46		40	115.54		330	222.68		620	320.12
–80	75.44		400	177.49		950	284.30		50	119.40		340	226.21		630	323.30
–70	77.66		410	179.53		960	286.14		60	123.24		350	229.72		640	326.48
–60	79.86		420	181.56		970	287.98		70	127.08		360	233.21		650	329.64
–50	82.07		430	183.59		980	289.82		80	130.90		370	236.70		660	332.79
–40	84.27		450	187.65		990	291.65									
–30	86.47		460	189.67		1000	293.48									
–20	88.66		470	191.68		1010	295.30									
–10	90.85		480	193.70		1020	297.12									
0	93.03		490	195.71		1030	298.94									
10	95.21		500	197.71		1040	300.75									
20	97.39		510	199.71		1050	302.56									
30	99.57		520	201.71		1060	304.37									
40	101.74		530	203.71		1070	306.17									
50	103.90		540	205.70		1080	307.97									
60	106.07		550	207.69		1090	309.77									
70	108.23		560	209.67		1100	311.56									
80	110.38		570	211.66		1110	313.35									
90	112.53		580	213.63		1120	315.14									
100	114.68		590	215.61		1130	316.92									
110	116.83		600	217.58		1140	318.70									
120	118.97		610	219.55		1150	320.47									
130	121.11		620	221.51		1160	322.24									
140	123.24		630	223.47		1170	324.01									
150	125.37		640	225.42		1180	325.77									
160	127.50		650	227.38		1190	327.53									
170	129.62		660	229.33		1200	329.29									
180	131.74		670	231.27		1210	331.04									
190	133.86		680	233.21												
200	135.97															

Note

To covert from °C to °F: {1.8 X (°C)] + 32 = °F
Example: (1.8 X 100) + 32 = 212 °F

To convert from °F to °C: 0.556 [(°F) – 32] = 100 °F
Example: 0.556 (212 – 32) = 100 °C

Mounting Accessories

ROSEMOUNT CONNECTION HEAD

The Rosemount Connection head is for general-purpose and spring-loaded sensors. The terminal block has six terminals for either single or dual element sensors. If the sensor assembly is ordered assembled to a Rosemount 248 or 644H head mount transmitter then the terminal block is replaced by the transmitters.

Specifications

Sensor Connection

- 1/2–14 NPT mounting thread. Screw terminals for lead wire connections.

Electrical Connection

- 1/2–14 NPT conduit

Materials of Construction

- Housing: Low copper aluminum
- Paint: Polyurethane
- Cover O-ring: Buna-N

Weight

- 18.5 oz (524 g)

Enclosure Rating

- NEMA 4X, IP66, and IP68

POLYPROPYLENE CONNECTION HEAD

The polypropylene connection head (part number 00644-4198-0011) is designed for use with sanitary sensors. It is FDA-compliant, and is resistant to attack by acids, alkalies, and organic solvents.

Specifications

Sensor Connection

- 1/2–14 NPT mounting thread. Screw terminals for lead wire connections

Electrical Connection

- 1/2–14 NPT conduit

Materials of Construction

- Housing: White polypropylene polymer
- O-Ring Seal: Silicone rubber
- Terminals: Nickel-plated brass

Temperature Limits

- –73 to 104 °C (–100 to 220 °F)

Weight

- 0.5 lb

CONNECTION HEAD

The Extended Cover Connection Head (P/N 00079-0324-xxxx) provides the additional space required by sensors that have bayonet connectors. This model can also be used with general-purpose and spring-loaded sensors. The terminal block has six terminals for either single- or dual-element sensors.

The Flat Cover Connection Head (P/N 00079-0325-xxxx) is for general-purpose and spring-loaded sensors. The terminal block has six terminals for either single- or dual-element sensors.

Specifications

Sensor Connection

- 1/2–14 ANPT mounting thread. Screw terminals for lead wire connections

Electrical Connection

- 3/4–14 ANPT conduit

Materials of Construction

- Housing: Low-copper aluminum alloy
- O-Ring Seal: Silicone rubber
- Terminals: Nickel-plated brass

Temperature Limits

Head Type	Unapproved	E5 option	E6 option	E1 option
Painted	–100 to 100 °C –148 to 212 °F	–50 to 85 °C –58 to 185 °F	–50 to 85 °C –58 to 185 °F	–40 to 65 °C –40 to 149 °F
Unpainted	–100 to 200 °C –148 to 392 °F	–50 to 85 °C –58 to 185 °F	–50 to 200 °C –58 to 392 °	–40 to 65 °C –40 to 149 °F

Enclosure Ratings

- When installed properly, painted connection heads are suitable for indoor and outdoor NEMA 4X and CSA Enclosure Type 4X installations. When installed properly, unpainted connection heads are suitable for NEMA 4 and CSA Enclosure Type 4 installations. See Hazardous Area Approvals for complete installation information

Weight

- 2 lb 8 oz (extended cover)
- 1 lb 9 oz (flat cover)

Connection Head Model Numbers

Model	Description
00644-4410-0011	Rosemount Connection Head, painted aluminum
007903252003	Six Terminals with Flat Cover, Unapproved, Unpainted
007903242003	Six Terminals with Extended Cover, Unapproved, Unpainted
007903250002	Six Terminals with Flat Cover, FM Approved, Unpainted
007903240002	Six Terminals with Extended Cover, FM Approved, Unpainted
007903250003	Six Terminals with Flat Cover, CSA Approved, Unpainted
007903240003	Six Terminals with Extended Cover, CSA Approved, Unpainted
007903252005	Six Terminals with Flat Cover, Unapproved, Painted
007903242005	Six Terminals with Extended Cover, Unapproved, Painted
007903250004	Six Terminals with Flat Cover, FM Approved, Painted
007903240004	Six Terminals with Extended Cover, FM Approved, Painted
007903250005	Six Terminals with Flat Cover, CSA Approved, Painted
007903240005	Six Terminals with Extended Cover, CSA Approved, Painted
00644-4198-0011	No Approval Options, White Polypropylene
00065-0305-0001	Round Terminal Block for Rosemount and Polypropylene heads
006444-4431-0001	External ground Screw Assembly for Rosemount Connection Head
00644-4435-0011	Polypropelyne Connection Head with Terminal Block 1/2 in. NPT entries
00079-0329-0001	Kit of 12 Silicone Rubber O-rings for Flat/Extended Heads

Connection Head Dimensional Drawing

Rosemount Connection Head

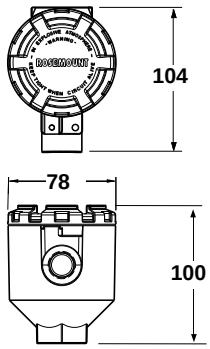

Polypropylene

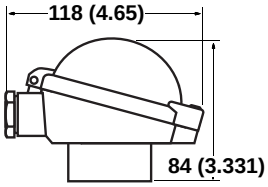

Flat Cover **Extended Cover** **Terminal View**

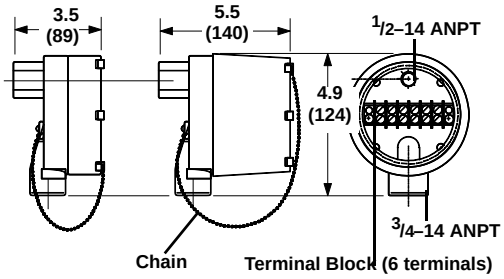

Dimensions are in inches (millimeters)

EXTENSION FITTING ASSEMBLIES

Extension fitting assemblies are available in

- a coupling and nipple assembly
- a union and nipple assembly

FIGURE 18. Extension Fitting

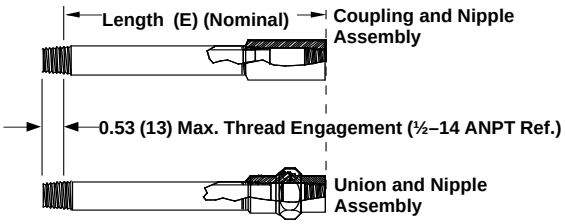

Dimensions are in inches (millimeters)

TABLE 25. Extension

Coupling and Nipple, SST		Union and Nipple, SST	
Model Number	**Length (E)**	**Model Number**	**Length (E)**
007903540250	2.5-in.	007903550250	2.5-in.
007903540300	3.0-in.(1)	007903550300	3.0-in.(1)
007903540350	3.5-in.	007903550350	3.5-in.
007903540400	4.0-in.	007903550400	4.0-in.
007903540450	4.5-in.	007903550450	4.5-in.
007903540500	5.0-in.	007903550500	5.0-in.
007903540550	5.5-in.	007903550550	5.5-in.
007903540600	6.0-in.(1)	007903550600	6.0-in.(1)
007903540650	6.5-in.	007903550650	6.5-in.
007903540700	7.0-in.	007903550700	7.0-in.
007903540750	7.5-in.	007903550750	7.5-in.
007903540800	8.0-in.	007903550800	8.0-in.
007903540850	8.5-in.	007903550850	8.5-in.
007903540900	9.0-in.	007903550900	9.0-in.

(1) Standard configuration with best delivery. Also available for emergency requirements. Consult factory for information.

Choosing an Extension

Aside from ambient temperature variations, the heat from the process is transferred from the thermowell to the transmitter housing. If the process temperature is near or beyond specification limits, consider the use of additional thermowell lagging, an extension nipple, or a remote mounting configuration to isolate the transmitter from the excessive temperatures. Use Figure 19 and the example below to determine an adequate thermowell extension length.

FIGURE 19. 3144 Transmitter Housing Temperature Rise versus Extension Length for a Test Installation

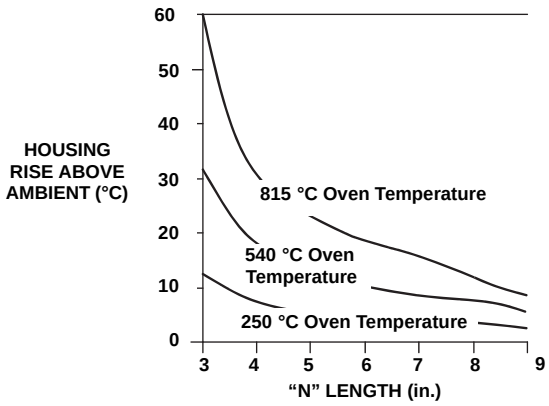

Example

The rated ambient temperature specification is 85 °C. If the maximum ambient temperature is 40 °C and the process temperature to be measured is 540 °C, the maximum allowable housing temperature rise is the rated temperature specification limit minus the existing ambient temperature (85 – 40), or 45 °C.

As shown in Figure 19, an extension (E) dimension of 3.0-in (76 mm) will result in a housing temperature rise of 30 °C. An "E" dimension of 3-in. would therefore be the minimum recommended length, and would provide a safety factor of about 15 °C. A longer "E" dimension, such as 6-in. (152 mm), would be desirable in order to reduce errors caused by transmitter temperature effect, although in that case the transmitter would probably require extra support. If a thermowell with lagging is used, the "E" dimension may be reduced by the length of the lagging.

MOUNTING ADAPTERS FOR SERIES 58, 68, 78, AND 183

M5–M7, Sensor Compression Fittings, 316 SST

- For adjustable sensor length.
- For low pressure applications (100 psig maximum).
- Fits ¼-inch diameter sensors.
- Available with 1/8–27 (M5), ¼–18 (M6), and ½–14 (M7) ANPT process threads.
- Not available on spring-loaded sensors.

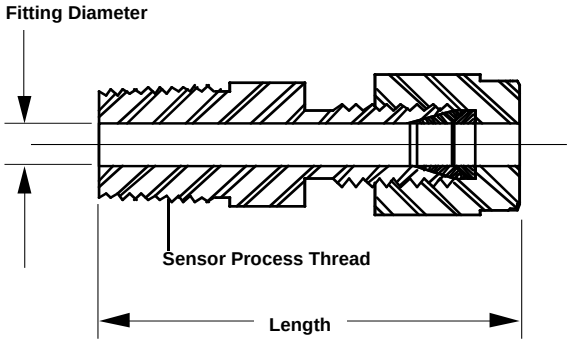

TABLE 26. Compression Fittings, 316 SST
(for attachment to the stem of the capsule)

Model Number	Option Code	Sensor Process Thread	Fitting Diameter		Length	
			in.	mm	in.	mm
C07961-0005	M5	1/8–27 ANPT	0.25	6.35	1.31	33.27
C07961-0006	M6	1/4–18 ANPT	0.25	6.35	1.5	38.1
C07961-0008	M7	1/2–14 ANPT	0.25	6.35	1.75	44.45

LEAD WIRE EXTENSIONS, CONNECTORS, AND SEALS

The following options are available on most Series 68 and 78 sensors. They are not available for use on Series 58C, 68Q, and 183 sensors or with SAA or ATEX/ISSeP Flameproof approval (Option Codes E7 or E1).

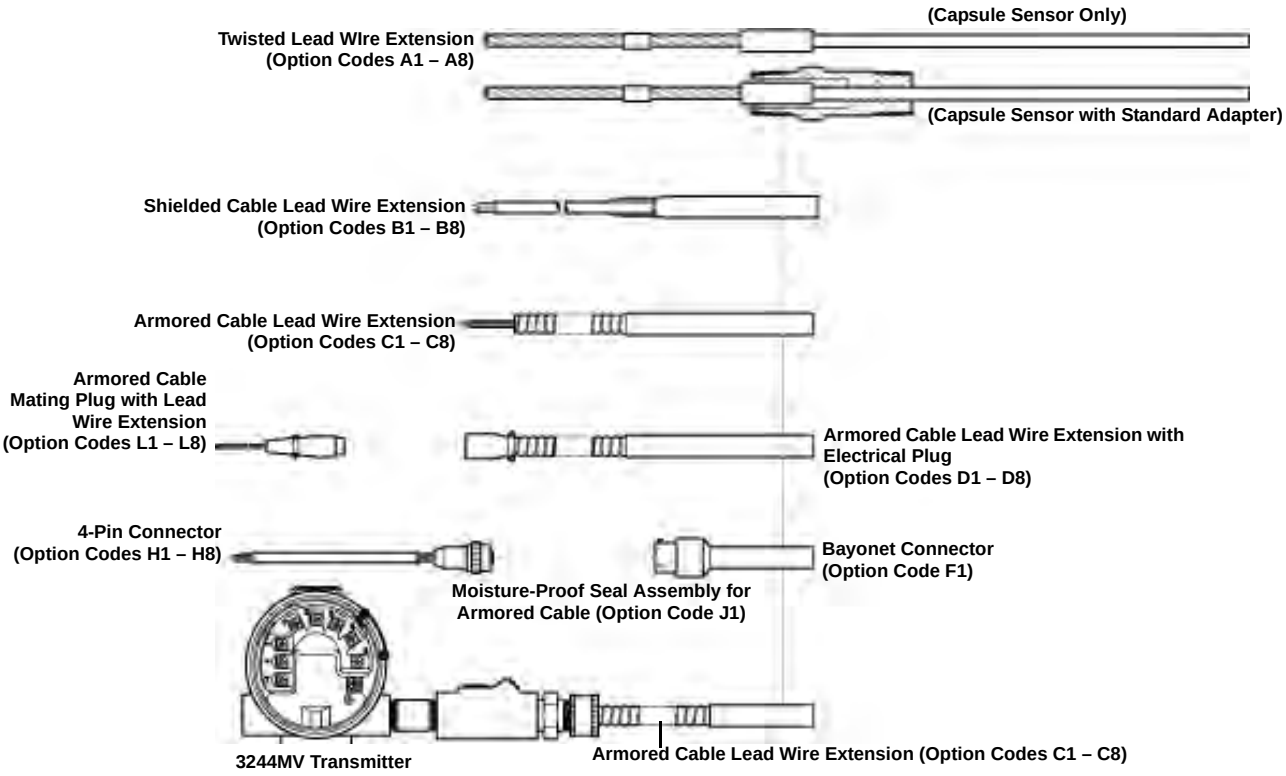

A1–A8, Twisted Lead Wire Extension

- Lead wire connections are silver brazed and individually insulated by shrinkable PTFE tubes
- Withstands 95 percent relative humidity
- 200° C (392° F) maximum temperature
- Available with single or dual-element sensors

Option Code	Y Length (ft)
A1	1 1/2
A2	3
A3	6
A4	12

Option Code	Y Length (ft)
A5	24
A6	50
A7	75
A8	100

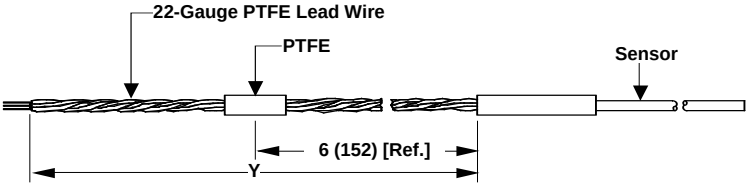

Not available for use with Series 68Q Sanitary RTDs and 183 thermocouples or with SAA or ATEX/ISSeP flameproof approval (option codes E7 or E1)

Dimensions are in inches (millimeters)

B1–B8, Shielded Cable Lead Wire Extension

- Copper shielded cable prevents electrical noise distortions to sensor signal output
- Withstands 95 percent relative humidity
- 200° C (392° F) maximum temperature

Option Code	Y Length (ft)
B1	1 1/2
B2	3
B3	6
B4	12

Option Code	Y Length (ft)
B5	24
B6	50
B7	75
B8	100

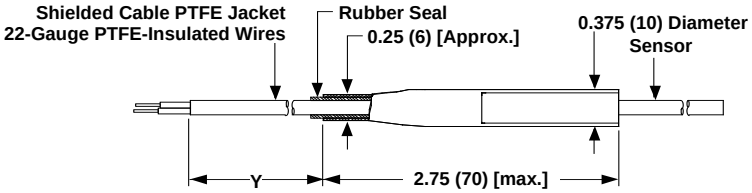

Not available for 58C, 68Q, and 183 sensors or with SAA or ATEX/ISSeP flameproof approval (option codes E7 or E1)

Dimensions are in inches (millimeters)

C1–C8, Armored Cable Lead Wire Extension

- Provides lead wire protection in heavy duty environments.
- Withstands 95 percent relative humidity
- 200° C (392° F) maximum temperature
- Available with single or dual-element sensors

Option Code	Y Length (ft)
C1	1 1/2
C2	3
C3	6
C4	12

Option Code	Y Length (ft)
C5	24
C6	50
C7	75
C8	100

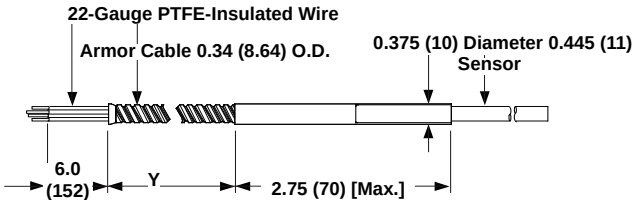

Not available for 58C, 68Q, and 183 sensors or with SAA or ATEX/ISSeP flameproof approval (option codes E7 or E1)

Dimensions are in inches (millimeters)

D1–D8, ARMORED CABLE LEAD WIRE EXTENSION WITH ELECTRICAL PLUG

- Provides lead wire protection in heavy-duty environments
- Provides quick-disconnect capability
- Withstands 95 percent relative humidity

Option Code	Y Length (ft)
D1	1 1/2
D2	3
D3	6
D4	12

Option Code	Y Length (ft)
D5	24
D6	50
D7	75
D8	100

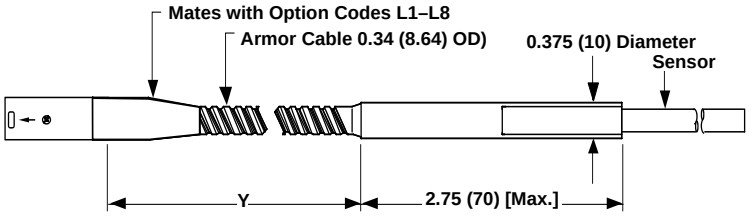

Not available for 58C, 68Q, and 183 sensors or with SAA or ATEX/ISSeP flameproof approval (option codes E7 or E1)

Dimensions are in inches (millimeters)

L1–L8, ARMORED CABLE MATING PLUG WITH LEAD WIRE EXTENSION

- Completes quick-disconnect capability for armored cable
- Withstands 95 percent relative humidity
- Twisted lead wire extension for lowest cost installation

Option Code	Y Length (ft)
L1	1 1/2
L2	3
L3	6
L4	12

Option Code	Y Length (ft)
L5	24
L6	50
L7	75
L8	100

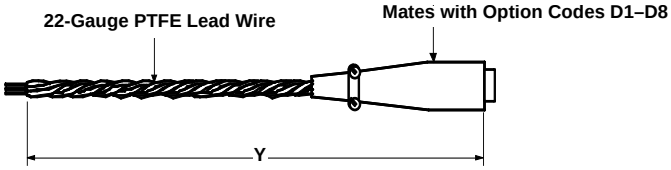

Not available for 58C, 68Q, and 183 sensors or with SAA or ATEX/ISSeP flameproof approval (option codes E7 or E1)

Dimensions are in inches (millimeters)

F1, 4-PIN BAYONET CONNECTOR

- Provides quick-disconnect capability
- Withstands 100 percent relative humidity with connector mate
- Available for capsule and general purpose with 4-wire lead wire configuration only

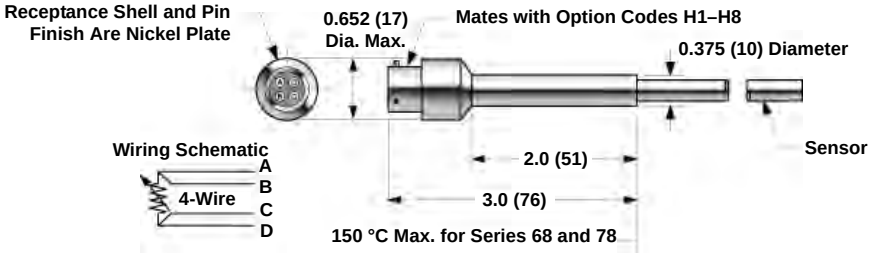

Not available for 58C, 68Q, and 183 sensors, or with FM or CSA explosion-proof, or with SAA or ATEX/ISSeP flameproof approval (option codes E5, E6, E7, or E1)

Dimensions are in inches (millimeters)

H1–H8, 4-PIN CONNECTOR MATING PLUG WITH LEAD WIRE EXTENSION

- Completes the quick-disconnect capability of connector
- Provides twisted lead wire extension for remote installations
- Withstands 100 percent relative humidity with connector mate
- F1 connector is required if H1–H8 lead wire extension is used

Option Code	Y Length (ft)
H1	1 1/2
H2	3
H3	6
H4	12

Option Code	Y Length (ft)
H5	24
H6	50
H7	75
H8	100

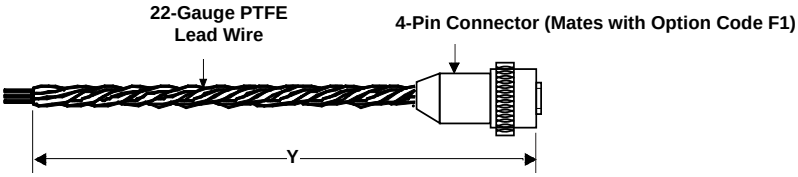

Not available for 58C, 68Q, and 183 sensors, or with FM or CSA explosion-proof, or with SAA or ATEX/ISSeP flameproof approval (option codes E5, E6, E7, or E1)

Dimensions are in inches (millimeters)

J1, MOISTURE-PROOF SEAL ASSEMBLY FOR ARMORED CABLE

- Prevents moisture migration through armored cable
- For use in humid environments but not for direct liquid immersion
- Non-disconnectable type assembly with armored cable and sensor

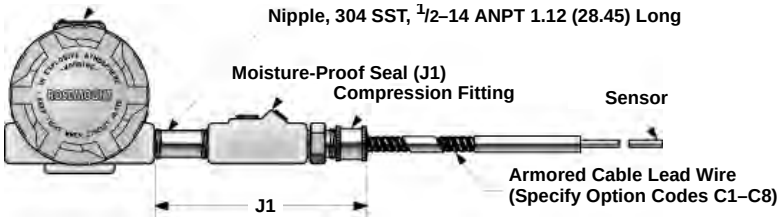

Not available for 58C, 68Q, and 183 sensors, or with FM or CSA explosion-proof, or with SAA or ATEX/ISSeP flameproof approval (option codes E5, E6, E7, or E1).
Moisture-proof seal assembly must be ordered with armored cable lead wire extension (option codes C1 – C8)

Dimensions are in inches (millimeters)

THERMOWELLS

To simplify ordering, the previous Series 79, 80, and 81 thermowell offerings are all included in the new Series 91 thermowell option.

Materials

Rosemount Thermowells are supplied in most materials required for industrial applications. Standard materials are 316 SST, 304 SST, and C1018 carbon steel. For corrosive environments, special materials such as Monel®, Hastelloy®, and Inconel 600 are available. Consult factory for other material availability.

Strength (Pressure and Flow Vibration)

The strength of a thermowell depends on several parameters that relate thermowell construction to the installation environment. For most industrial applications, standard Rosemount thermowells provide the necessary strength if the material, style, and length are correct for the application. The proper selection of a thermowell depends on fluid type, temperature, pressure, and fluid velocity. It is important to note that most thermowell failures are caused by vibration that is induced by fluid flow. If static pressure strength is a major consideration, refer to Table 27 for standard material ratings for a 1/2-inch tip. Tapered thermowells are offered for additional strength.

Strength Calculation

Rosemount Inc. has the ability to perform thermowell frequency calculations to verify that the thermowell dimensions you provide are appropriate for your specific application. To take advantage of this calculation, fill out and return the Configuration Data Sheet.

Construction

All thermowell bodies with an overall length less than 42-in. are machined from solid bar stock to ensure water-tightness. Flange mounts are welded to the thermowell body. Standard construction provides immersion lengths (U) from 2½ to 48 inches with overall lengths (L) from 4 to 59 inches respectively. Thermowells with overall lengths larger than 42-in. will be a 3-piece welded construction. Consult the factory for more information on welded 3-piece construction thermowells.

Identification Data

The part number is etched on each thermowell. Additional tagging for specific customer requirements is available.

Installation

For dimensional drawings of Thread Mounted, Weld Mounted, and Flange Mounted Thermowells, refer to Figure 20, 22, and 24.

TABLE 27. Thermowell Material Rating

		Process Rating(1) (psi) at Temperature (°F)						
Material	**Recommended Usage**	**0 °F**	**300 °F**	**500 °F**	**700 °F**	**900 °F**	**1100 °F**	**1300 °F**
304 SST	Good resistance to oxidation	5600	4800	4700	4600	3400	2400	780
316 SST	Good resistance to corrosion. Better resistance to chemical attack than 304 SST	5600	5400	5300	5200	4400	3200	1250
Carbon Steel	For non-corrosive service	3700	3700	3700	3650	2000	—	—

(1) In case of an explosion, the integrity of the thermowell is maintained to the specified pressures.

ORDERING INFORMATION

TABLE 28. Series 91 Thermowells
★ The Standard offering represents the most common options. The starred options (★) should be selected for best delivery.
The Expanded offering is subject to additional delivery lead time.

Model	Description	
0091	Thermowells	
Thermowell Material		
Standard		**Standard**
A	Type 316 SST	★
B	Type 304 SST	★
C	Carbon Steel	★
D	316L SST	★
E	304L SST	★
Expanded		
F	Alloy 20	
G	Alloy 400	
H	Alloy 600	
J	Alloy C-276	
L	Alloy B	
M	304 SST with Teflon (PTFE) coating	
P	Chrome Molybdenum F22	
R	Nickel 200	
T	Titanium	
U(2)	316 SST with tantalum sheath	
V	310 SST	
W	321 SST	
X	Special Material	
Y	316Ti SST	
Z	Chrome Molybdenum F11	
Sensor/Immersion Length (U) in inches(1)		
Standard		**Standard**
015(2)	1.5 in.	★
020	2.0 in.	★
025	2.5 in.	★
030	3.0 in.	★
035	3.5 in.	★
040	4.0 in.	★
045	4.5 in.	★
050	5.0 in.	★
055	5.5 in.	★
060	6.0 in.	★
065	6.5 in.	★
070	7.0 in.	★
075	7.5 in.	★
080	8.0 in.	★
085	8.5 in.	★
090	9.0 in.	★
095	9.5 in.	★
100	10.0 in.	★
105	10.5 in.	★
110	11.0 in.	★
115	11.5 in.	★
120	12.0 in.	★
125	12.5 in.	★
130	13.0 in.	★
135	13.5 in.	★

TABLE 28. Series 91 Thermowells
★ The Standard offering represents the most common options. The starred options (★) should be selected for best delivery.
The Expanded offering is subject to additional delivery lead time.

140	14.0 in.				★
145	14.5 in.				★
150	15.0 in.				★
155	15.5 in.				★
160	16.0 in.				★
165	16.5 in.				★
170	17.0 in.				★
175	17.5 in.				★
180	18.0 in.				★
185	18.5 in.				★
190	19.0 in.				★
195	19.5 in.				★
200	20.0 in.				★
205	20.5 in.				★
210	21.0 in.				★
215	21.5 in.				★
220	22.0 in.				★
225	22.5 in.				★
230	23.0 in.				★
240	24.0 in.				★
250	25.0 in.				★
260	26.0 in.				★
270	27.0 in.				★
280	28.0 in.				★
290	29.0 in.				★
300	30.0 in.				★
310	31.0 in.				★
320	32.0 in.				★
330	33.0 in.				★
340	34.0 in.				★
350	35.0 in.				★
360	36.0 in.				★
370	37.0 in.				★
380	38.0 in.				★
390	39.0 in.				★
400	40.0 in.				★
410	41.0 in.				★
420	42.0 in.				★
430	43.0 in.				★
440	44.0 in.				★
450	45.0 in.				★
460	46.0 in.				★
470	47.0 in.				★
480	48.0 in.				★
Thermowell Mounting Style		**Stem Style**	**Tip A (in.)**	**Root B (in.)**	
Standard					**Standard**
T20	Thread, 1/2–14 ANPT	Stepped	0.50	0.63	★
T22	Thread, 3/4–14 ANPT	Stepped	0.50	0.75	★
T24	Thread, 1–11.5 ANPT	Stepped	0.50	0.88	★
T26	Thread, 3/4–14 ANPT	Tapered	0.63	0.88	★
T28	Thread, 1–11.5 ANPT	Tapered	0.63	1.06	★
T30	Thread, 1 1/2–11.5 ANPT	Tapered	0.75	1.50	★
T32	Thread, 1/2–14 ANPT	Straight	0.50	0.50	★

TABLE 28. Series 91 Thermowells
★ The Standard offering represents the most common options. The starred options (★) should be selected for best delivery.
The Expanded offering is subject to additional delivery lead time.

T34	Thread, 3/4–14 ANPT	Straight	0.75	0.75	★
T36	Thread, 1–11.5 ANPT	Straight	0.75	0.75	★
T38	Thread, 3/4–14 ANPT	Straight	0.50	0.50	★
T44	Thread, 1/2–14 ANPT	Tapered	0.50	0.63	★
W38	Weld, 3/4-in. pipe	Stepped	0.50	0.75	★
W40	Weld, 1-in. pipe	Stepped	0.50	0.88	★
W42	Weld, 3/4-in. pipe	Tapered	0.63	0.88	★
W44	Weld, 1-inch Pipe,	Tapered	0.75	1.00	★
W46	Weld, 1 1/4-inch Pipe	Tapered	0.75	1.25	★
W48	Weld, 3/4-inch Pipe	Straight	0.75	0.75	★
W50	Weld, 1-inch Pipe	Straight	0.75	0.75	★
F10	Flange, F = 2-inch, Class 150	Straight	0.75	0.75	★
F12	Flange, F = 3-inch, Class 150	Straight	0.75	0.75	★
F52	Flange, F = 1-inch, Class 150	Stepped	0.50	0.75	★
F54	Flange, F = 1½-inch, Class 150	Stepped	0.50	0.75	★
F56	Flange, F = 2-inch, Class 150	Stepped	0.50	0.75	★
F58	Flange, F = 1-inch, Class 150	Tapered	0.75	1.00	★
F60	Flange, F = 1½-inch, Class 150	Tapered	0.75	1.00	★
F62	Flange, F = 2-inch, Class 150	Tapered	0.75	1.25	★
F64	Flange, F = 1-inch, Class 150	Straight	0.75	0.75	★
F66	Flange, F = 1½-inch, Class 150	Straight	0.75	0.75	★
F70	Flange, F = 1-inch, Class 300	Stepped	0.50	0.75	★
F72	Flange, F = 1½-inch, Class 300	Stepped	0.50	0.75	★
F74	Flange, F = 2-inch, Class 300	Stepped	0.50	0.75	★
F76	Flange, F = 1-inch, Class 300	Tapered	0.75	1.00	★
F78	Flange, F = 1½-inch, Class 300	Tapered	0.75	1.00	★
F80	Flange, F = 2-inch, Class 300	Tapered	0.75	1.25	★
F82	Flange, F = 1-inch, Class 300	Straight	0.75	0.75	★
F84	Flange, F = 1½-inch, Class 300	Straight	0.75	0.75	★
F86	Flange, F = 2-inch, Class 300	Straight	0.75	0.75	★
F88(3)	Flange, F = 1-inch, Class 600	Stepped	0.50	0.75	★
F90(3)	Flange, F = 1½-inch, Class 600	Stepped	0.50	0.75	★
F92(3)	Flange, F = 2-inch, Class 600	Stepped	0.50	0.75	★
F94(3)	Flange, F = 1-inch, Class 600	Tapered	0.75	1.00	★
F96(3)	Flange, F = 1½-inch, Class 600	Tapered	0.75	1.00	★
F98(3)	Flange, F = 2-inch, Class 600	Tapered	0.75	1.25	★
F02(3)	Flange, F = 1-inch, Class 600	Straight	0.75	0.75	★
F04(3)	Flange, F = 1½-inch, Class 600	Straight	0.75	0.75	★
F06(3)	Flange, F = 2-inch, Class 600	Straight	0.75	0.75	★
F16(3)	Flange, F = 1½-inch, Class 900	Tapered	0.75	1.00	★
F34(3)	Flange, F = 1½-inch, Class 1500	Tapered	0.75	1.00	★
F24(3)	Flange, F = 2-inch, Class 1500	Tapered	0.75	1.25	★
F08(4)	Flange, F = 1½-inch, Class 2500	Tapered	0.75	1.00	★
Q02(5)	Sanitary, 1-in.,Tri-Clamp	Stepped	0.50	0.75	★
Q04(6)	Sanitary, 1 1/2-in., Tri-Clamp	Stepped	0.50	0.75	★
Q06(6)	Sanitary, 2-in., Tri-Clamp	Stepped	0.50	0.75	★
Q08(6)	Sanitary, 3-in.,Tri-Clamp	Stepped	0.50	0.75	★
Q20(6)	Sanitary, 3/4-in., Tri-Clamp	Straight	0.44	0.44	★
Q22(6)	Sanitary, 1-in.,Tri-Clamp	Straight	0.50	0.50	★
Q24(6)	Sanitary, 1 1/2-in., Tri-Clamp	Straight	0.50	0.50	★
Q26(6)	Sanitary, 2-in., Tri-Clamp	Straight	0.50	0.50	★
Q28(6)	Sanitary, 3-in.,Tri-Clamp	Straight	0.50	0.50	★

TABLE 28. Series 91 Thermowells
★ The Standard offering represents the most common options. The starred options (★) should be selected for best delivery.
The Expanded offering is subject to additional delivery lead time.

Thermowell Lagging Length (T) in.		
Standard		**Standard**
T000	0.0 in.	★
T005	0.5 in.	★
T010	1.0 in.	★
T015	1.5 in.	★
T020	2.0 in.	★
T025	2.5 in.	★
T030	3.0 in.	★
T035	3.5 in.	★
T040	4.0 in.	★
T045	4.5 in.	★
T050	5.0 in.	★
T055	5.5 in.	★
T060	6.0 in.	★
T065	6.5 in.	★
T070	7.0 in.	★
T075	7.5 in.	★
T080	8.0 in.	★
T085	8.5 in.	★
T090	9.0 in.	★
T095	9.5 in.	★
Instrument Connection Thread		
Standard		**Standard**
P	1/2–14 NPSM	★
D	1/2–14 ANPT for CSA	★
Options (Include with selected model number)		
Special External Pressure Test		
Standard		**Standard**
R01(6)	Special External Pressure Test	★
Material Certification		
Standard		**Standard**
Q8	Material Certification	★
Dye Penetration Test		
Standard		**Standard**
R03	Dye Penetration Test	★
Thermowell Special Cleaning		
Standard		**Standard**
R04	Thermowell Special Cleaning	★
NACE Approval		
Standard		**Standard**
R05	NACE Approval	★
SST Plug and Chain		
Standard		**Standard**
R06	SST Plug and Chain	★
Full Penetration Weld		
Standard		**Standard**
R07(7)	Full Penetration Weld	★
Thermowell Concentric Serrations		
Standard		**Standard**
R09(7)(8)	Concentric Serration of Thermowell Flange Face	★

TABLE 28. Series 91 Thermowells
★ The Standard offering represents the most common options. The starred options (★) should be selected for best delivery.
The Expanded offering is subject to additional delivery lead time.

Flat Faced Flange		
Standard		**Standard**
R10 (7)(8)	Flat Face Flange	★
Vent Hole		
Standard		**Standard**
R11	Vent Hole	★
Special Surface Finish		
Standard		**Standard**
R14(9)	Thermowell Special Surface Finish (12 R_a Max) (Maximum (U) length = 22.5 in.)	★
Ring Joint Flange		
Standard		**Standard**
R16(3)(7)(8)	Ring Joint Flange (Not available with 0-in. (T) length)	★
Electropolish		
Standard		**Standard**
R20(10)	Electropolish	★
Wake Frequency		
Standard		**Standard**
R21	Wake Frequency-Thermowell Strength Calculation	★
Internal Pressure Test		
Standard		**Standard**
R22	Internal Pressure Test	★
Brass Plug & Chain		
Standard		**Standard**
R23	Brass Plug & Chain	★
Canadian Registration No.		
Expanded		
R24	CRN Marking for British Columbia	
R25	CRN Marking for Alberta	
R26	CRN Marking for Saskatchewan	
R27	CRN Marking for Manitoba	
R28	CRN Marking for Ontario	
R29	CRN Marking for Quebec	
R30	CRN Marking for New Brunswick	
R31	CRN Marking for Nova Scotia	
R32	CRN Marking for Prince Edward Island	
R33	CRN Marking for Yukon Territory	
R34	CRN Marking for Northwest Territory	
R35	CRN Marking for Nunavut	
R36	CRN Marking for Newfoundland and Labrador	
Twell From Hex Stock		
Expanded		
R37	Thermowell From Hex stock	

(1) Thermowells with an overall lengths ("U" + "T" + 1.75-in.) of 36-in. or less are machined from solid bar stock. Thermowells with an overall length larger than 42-in. will be constructed using a welded 3-piece design and are available only with a stepped stem style.

(2) Available in straight stem only

(3) Not available with 0-in. (T) length.

(4) Not available with 0- or 1/2-in. (T) length.

(5) Limited to 24" immersion length and 316 or 304 SST materials only.

(6) Maximum (U) length = 42.0-in.

(7) Available on flanged thermowells only.

(8) Only one flange face option allowed.

(9) Maximum (U) length = 22.5 inches.

(10) Not available on flanged thermowells and L lengths longer than 24".

Ordering Example

Typical Model Number

Model	Material	Immersion Length	Mounting Style	Lagging Length	Connection Thread	Additional Options
0091	A	030	F52	T040	P	R01 R05 R07

FIGURE 20. Thread Mounted Thermowells

Straight

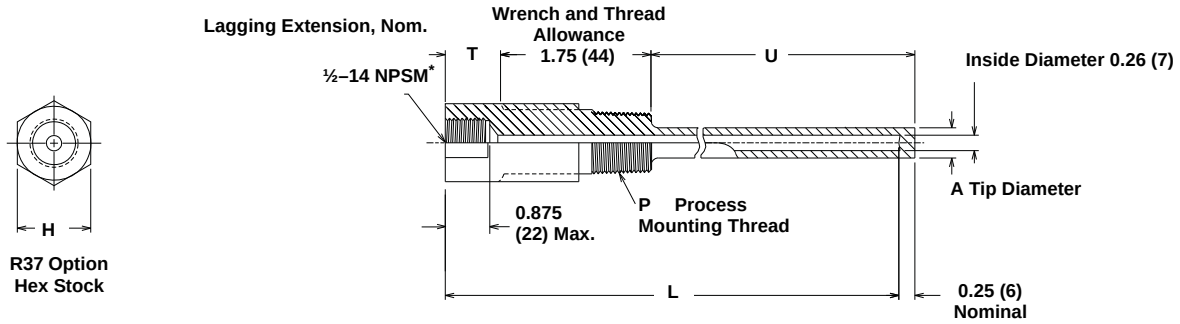

Thread (P)	Hex Size Inches (H)
0.5 – 0.75 ANPT	1.125
1–11.5 ANPT	1.375

Tapered

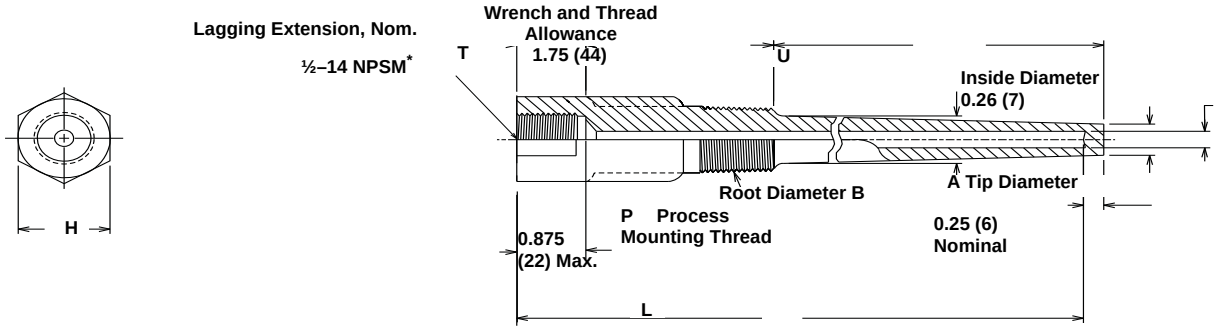

Thread (P)	Hex Size Inches (H)
0.5 – 0.75 ANPT	1.125
1–11.5 ANPT	1.375

** 1/2–14 ANPT threads are available*

Dimensions are in inches (millimeters)

FIGURE 21. Thread Mounted Thermowells (continued)

Stepped

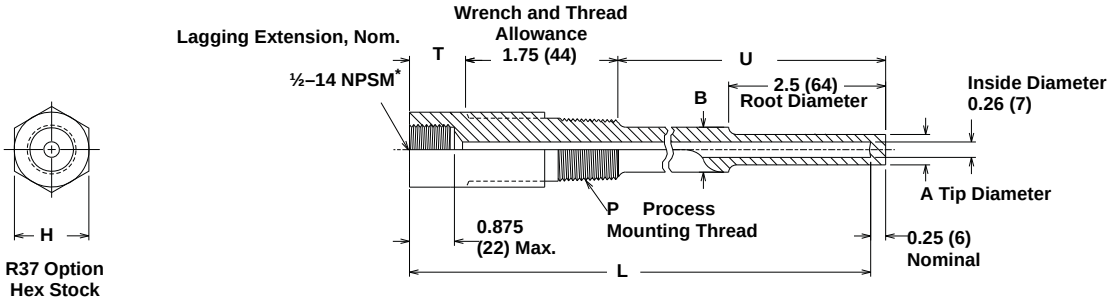

Stepped, For Thermowells with Overall Length Greater than 42-in. (3-Piece Construction)

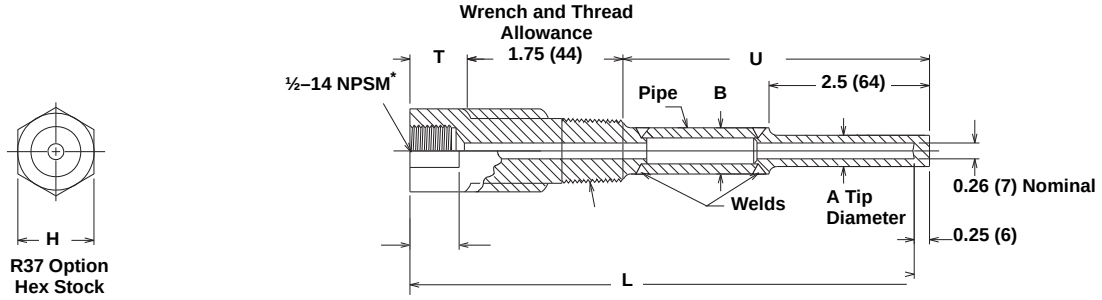

Thread (P)	Hex Size Inches (H)
0.5 – 0.75 ANPT	1.125
1–11.5 ANPT	1.375

** 1/2–14 ANPT threads are available*

Dimensions are in inches (millimeters)

FIGURE 22. Weld Mounted Thermowells

Straight

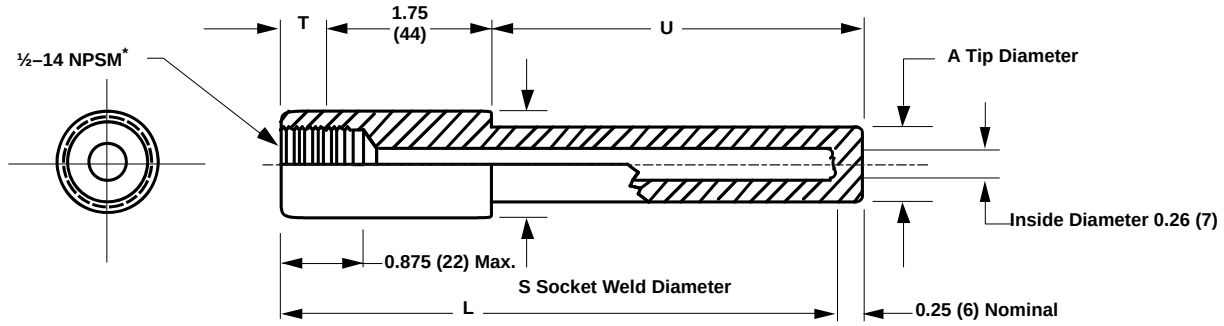

Pipe Size	Socket Size (S) Diameter
0.75-in.	1.050 ±0.010
1-in.	1.315 ±0.010

Tapered

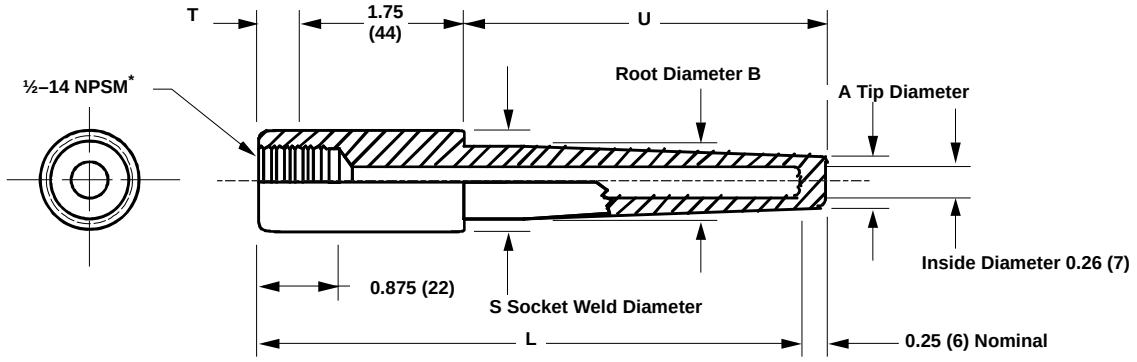

Pipe Size	Socket Size (S) Diameter
0.75-in.	1.050 ±0.010
1-in.	1.315 ±0.010

** 1/2–14 ANPT threads are available*

Dimensions are in inches (millimeters)

FIGURE 23. Weld Mounted Thermowells (continued)

Stepped

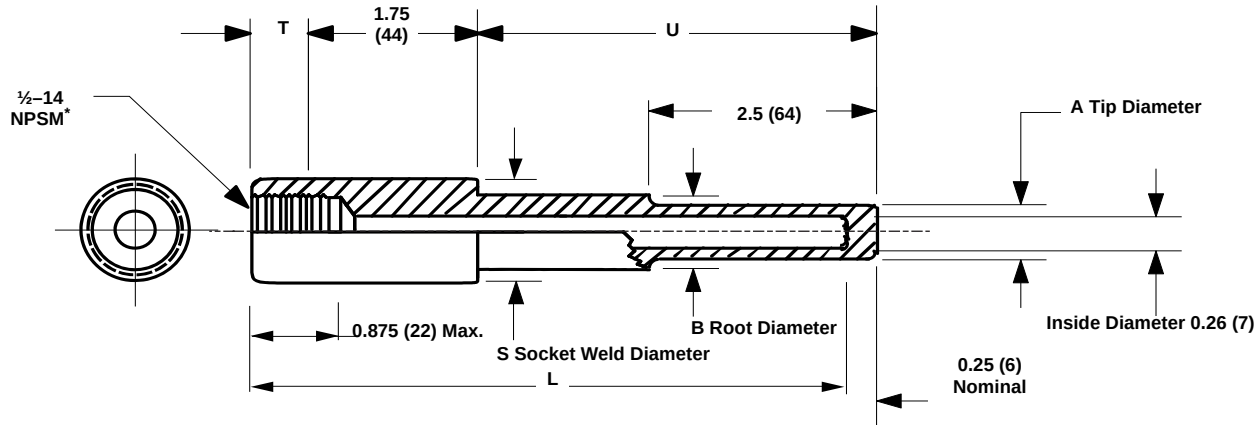

Stepped, For Thermowells with Overall Length Greater than 42-in. (3-Piece Construction)

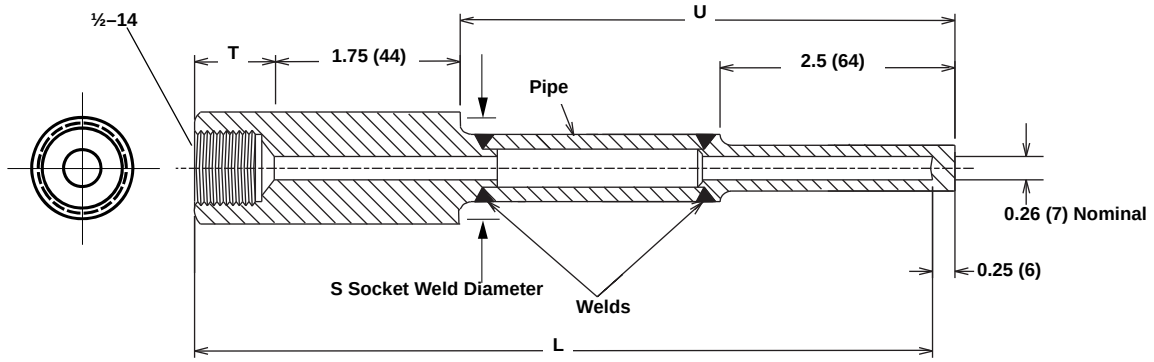

Pipe Size	Socket Size (S) Diameter
0.75-in.	1.050 ±0.010
1-in.	1.315 ±0.010

** 1/2–14 ANPT threads are available*

Dimensions are in inches (millimeters)

FIGURE 24. Flange Mounted Thermowells

Straight

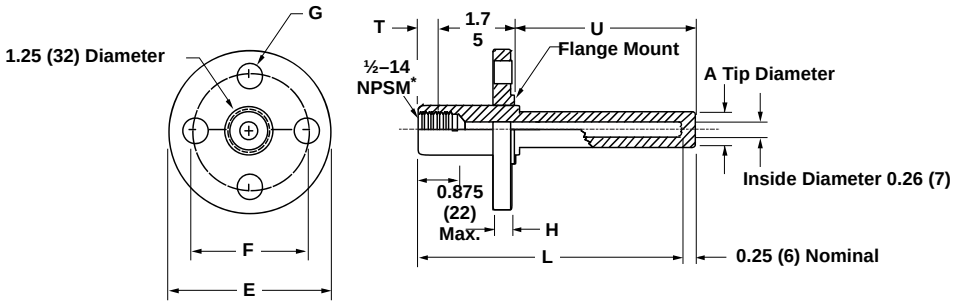

Tapered

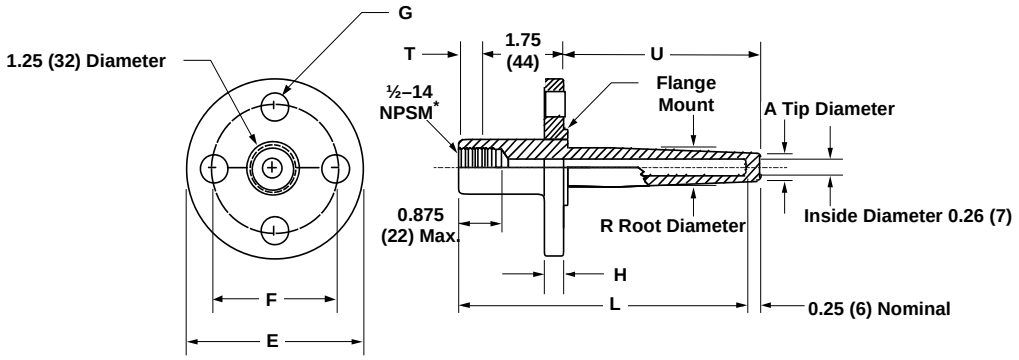

Size (in.)	O.D. (E)	Circle (F)	# of holes and dia. (G)	thickness (in.) (H)
Class 150				
1.0	4.25	3.12	four-0.625	0.5625
1.5	5.0	3.88	four-0.625	0.6875
2.0	6.0	4.75	four-0.75	0.75
3.0	7.5	6.00	four-0.75	0.94
Class 300				
1.0	4.88	3.5	four-0.75	0.69
1.5	6.12	4.5	four-0.88	0.81
2.0	6.5	5.0	eight-0.75	0.88

Size (in.)	O.D. (E)	Circle (F)	# of holes and dia. (G)	thickness (in.) (H)
Class 600				
1.0	4.88	3.5	four-0.75	0.94
1.5	6.12	4.5	four-0.88	1.13
2.0	6.5	5.0	eight-0.75	1.25
Class 900 and 1500				
1.5	7.0	4.88	four-1.12	1.5
Class 2500				
1.5	8.0	5.75	four-1.25	2.0

** 1/2–14 ANPT threads are available*

Dimensions are in inches (millimeters)

FIGURE 25. Flange Mounted Thermowells (continued)

Stepped

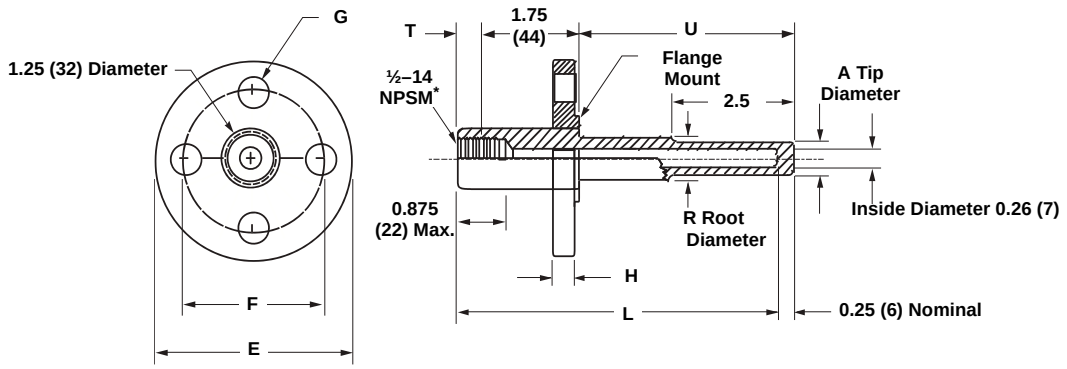

Stepped, For Thermowells with Overall Length Greater than 42-in. (3-Piece Construction)

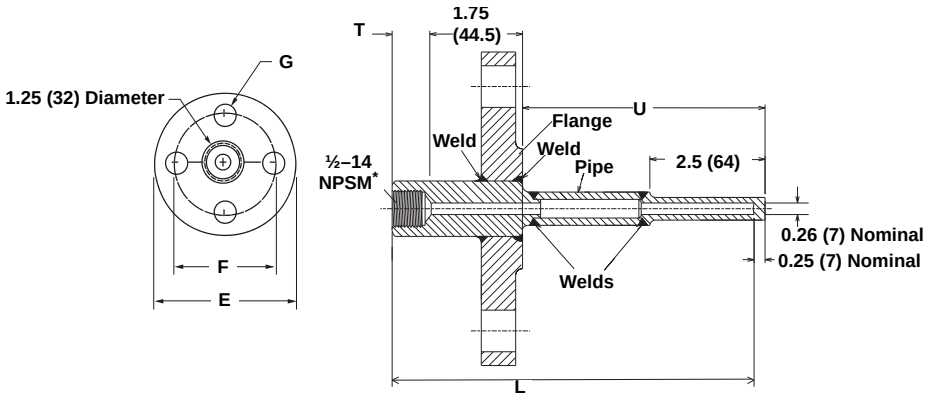

Size (in.)	O.D. (E)	Circle (F)	# of holes and dia. (G)	thickness (in.) (H)
Class 150				
1.0	4.25	3.12	four-0.625	0.5625
1.5	5.0	3.88	four-0.625	0.6875
2.0	6.0	4.75	four-0.75	0.75
3.0	7.5	6.00	four-0.75	0.94
Class 300				
1.0	4.88	3.5	four-0.75	0.69
1.5	6.12	4.5	four-0.88	0.81
2.0	6.5	5.0	eight-0.75	0.88

Size (in.)	O.D. (E)	Circle (F)	# of holes and dia. (G)	thickness (in.) (H)
Class 600				
1.0	4.88	3.5	four-0.75	0.94
1.5	6.12	4.5	four-0.88	1.13
2.0	6.5	5.0	eight-0.75	1.25
Class 900 and 1500				
1.5	7.0	4.88	four-1.12	1.5
Class 2500				
1.5	8.0	5.75	four-1.25	2.0

** 1/2–14 ANPT threads are available*

Dimensions are in inches (millimeters)

Hazardous Area Approvals

SENSORS

Factory Mutual (FM) Approval

E5 Explosion Proof for Class I, Division 1, Groups B, C, and D. Dust-Ignition Proof for Class II/III, Division 1, Groups E, F, and G. Suitable for indoor and outdoor (NEMA 4X) hazardous locations. Install in accordance with Rosemount drawing 00068-0013.

Canadian Standards Association (CSA) Approval

E6 Explosion Proof for Class I, Division 1, Groups B, C, and D. Dust-Ignition Proof for Class II/III, Division 1, Groups E, F, and G. Suitable for Class I, Division 2, Groups A, B, C, and D. Suitable for indoor and outdoor (CSA Enclosure Type 4X) hazardous locations. Install in accordance with Rosemount drawing 00068-0033.

To ensure approval compliance install sensors in exact accordance with the specified installation drawings (see Figure 27).

CONNECTION HEADS

Factory Mutual (FM) Approval

E5 Explosion Proof for Class I, Division 1, Groups B, C, and D. Dust-Ignition Proof for Class II/III, Division 1, Groups E, F, and G. Painted models are suitable for indoor and outdoor (NEMA 4X) hazardous locations. Unpainted models are suitable for indoor and outdoor (NEMA 4) hazardous locations. When used with temperature sensors, connection heads must be installed in accordance with Rosemount drawing 00068-0013.

Canadian Standards Association (CSA) Approval

E6 Explosion Proof for Class I, Division 1, Groups C, and D. Dust-Ignition Proof for Class
II/III, Division 1, Groups E, F, and G. Suitable for Class I, Division 2, Groups A, B, C, and D.
Painted models are suitable for indoor and outdoor (CSA Enclosure Type 4X) hazardous locations. Unpainted models are suitable for indoor and outdoor (CSA Enclosure Type 4) hazardous locations. When used with temperature sensors, connection heads must be installed in accordance with Rosemount drawing 00068-0033.

To ensure approval compliance, install connection heads in exact accordance with the specified installation drawings (see Figure 27).

SENSOR AND TRANSMITTER ASSEMBLIES

ATEX Approval

E1 ATEX Explosion- proof
Certificate Number: KEMA99ATEX8715
ATEX Marking: Ⓔx II 2 G
EEx d IIC T6 (– 40°C ≤ T_{amb} ≤ +65°C)

Rosemount Series 68 and 78 RTD and Series 183 thermocouple temperature sensors with spring-loaded or general purpose style sensors are approved only for direct mount to the Rosemount 3144P, 3244MV, 644, 244E, 144H, and 248 or mounted to the Rosemount Connection Head.

To ensure approval compliance, specify the E1 option on both the sensor and the transmitter at the time of ordering.

NOTE
Rosemount series 68 and 78 RTD and Series 183 Thermocouple Temperature Sensors can be supplied as a replacement part with the E1 option for installation in an existing temperature measurement assembly.

Standard Association of Australia (SAA) Flameproof Approval

E7 Ex d IIC T6 (T_{amb} = –20 to 60 °C)
Rosemount Series 68 and 78 RTD and Series 183 thermocouple temperature sensors with spring-loaded or general purpose style sensor adapters are approved for direct mount to the Rosemount 144, 244E, 644, 3144 and 3244MV Smart Temperature Transmitters or mounted to the Rosemount Connection Head.

To ensure approval compliance, specify the E7 option on both the sensor and the transmitter at the time of ordering, and install in exact accordance with Rosemount drawing 03144-0225 (see Figure 30).

Factory Mutual (FM) Explosion-Proof

FIGURE 26. Installation Drawing 00068-0013, Rev. AD

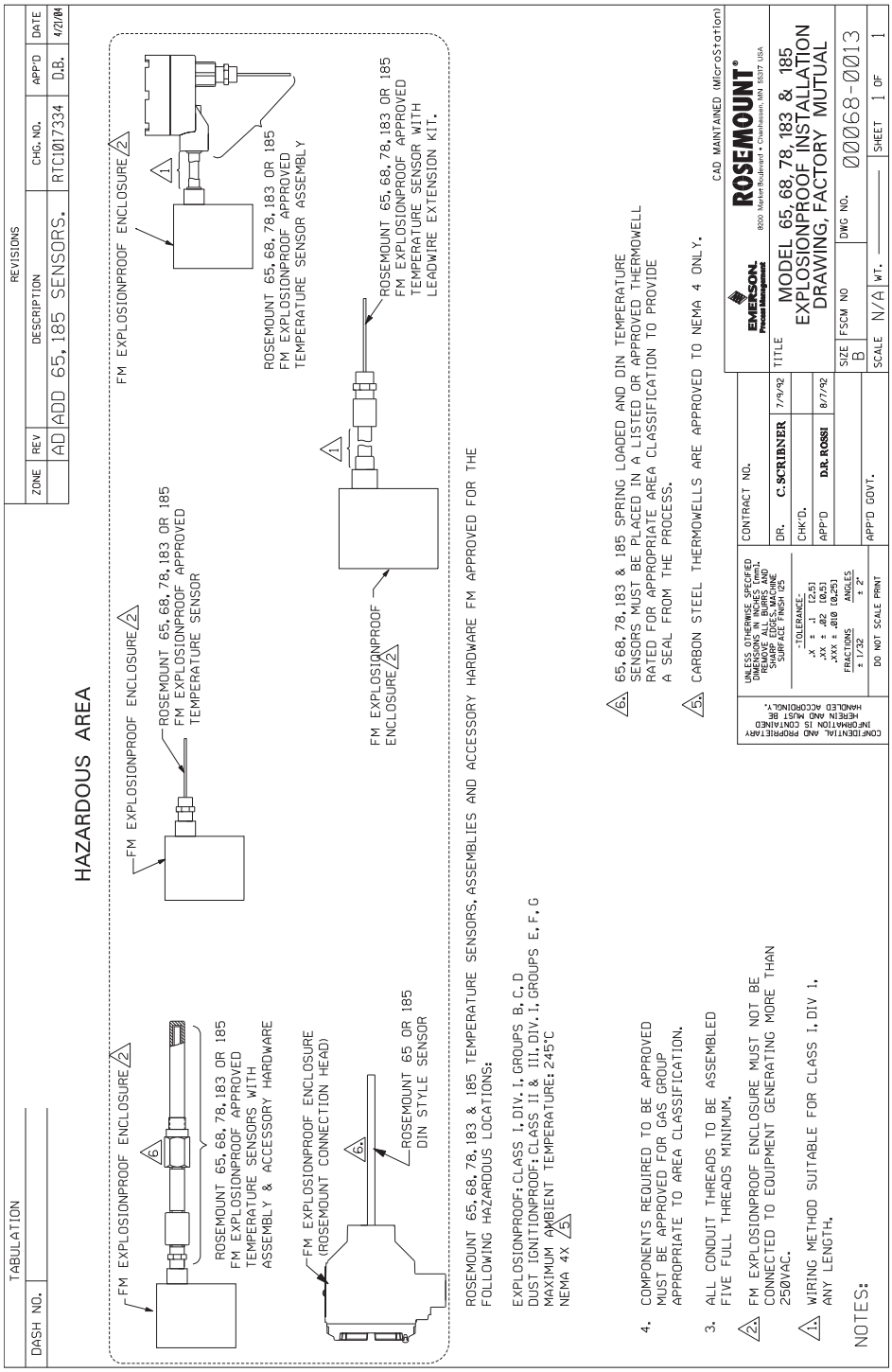

NOTE
For Hand-Tight Assembly Option XA: End-User (installer) must unscrew threaded joints, then reassemble and tighten all joints per installation drawing 00068-0013.

Canadian Standards Association (CSA) Explosion-Proof

FIGURE 27. Installation Drawing 00068-0033, Rev. AB Page 1 of 2

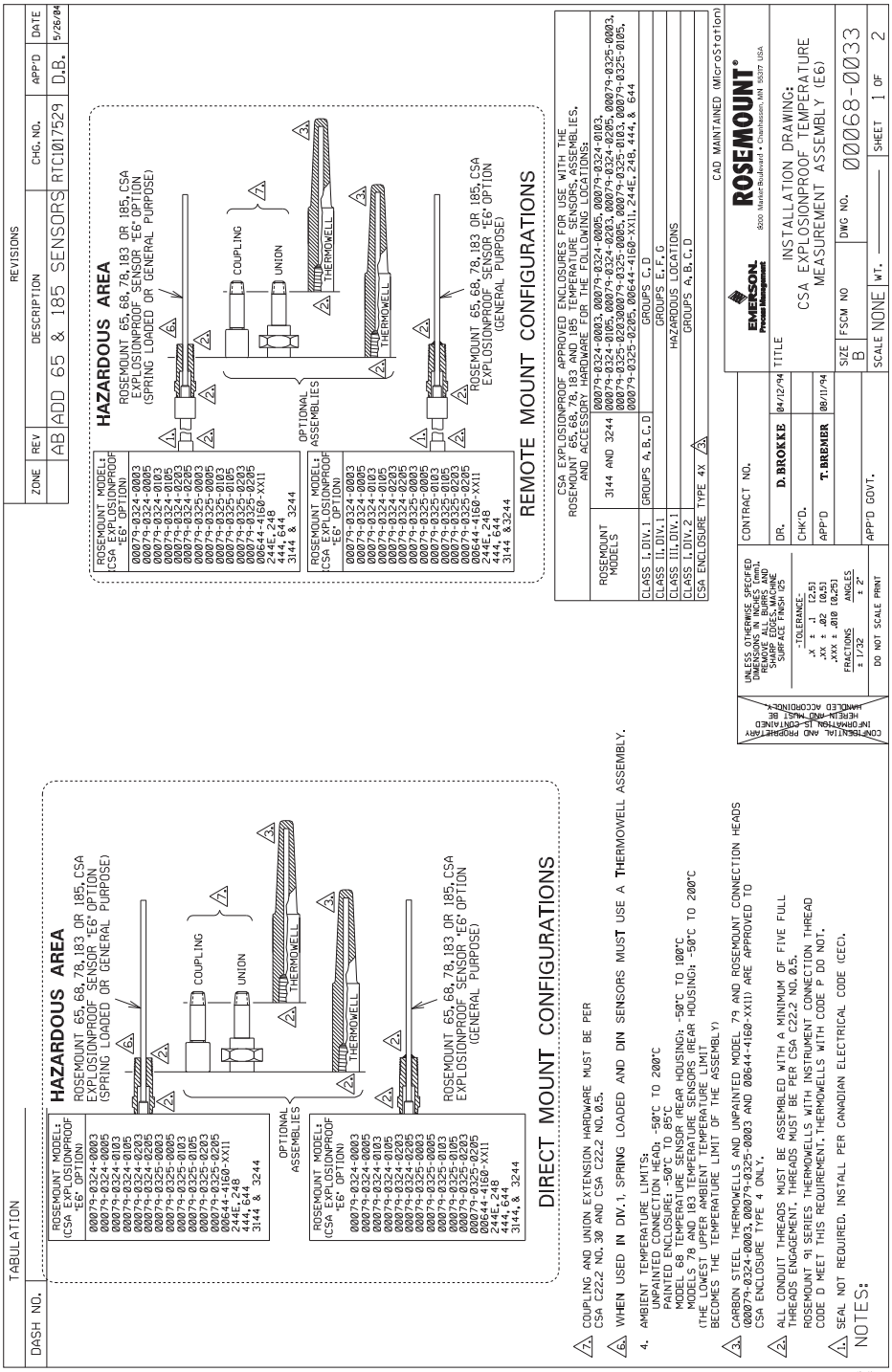

NOTE

For Hand-Tight Assembly Option XA: End-User (installer) must unscrew threaded joints, then reassemble and tighten all joints per installation drawing 00068-0033.

FIGURE 28. Installation Drawing 00068-0033, Rev. AB Page 2 of 2

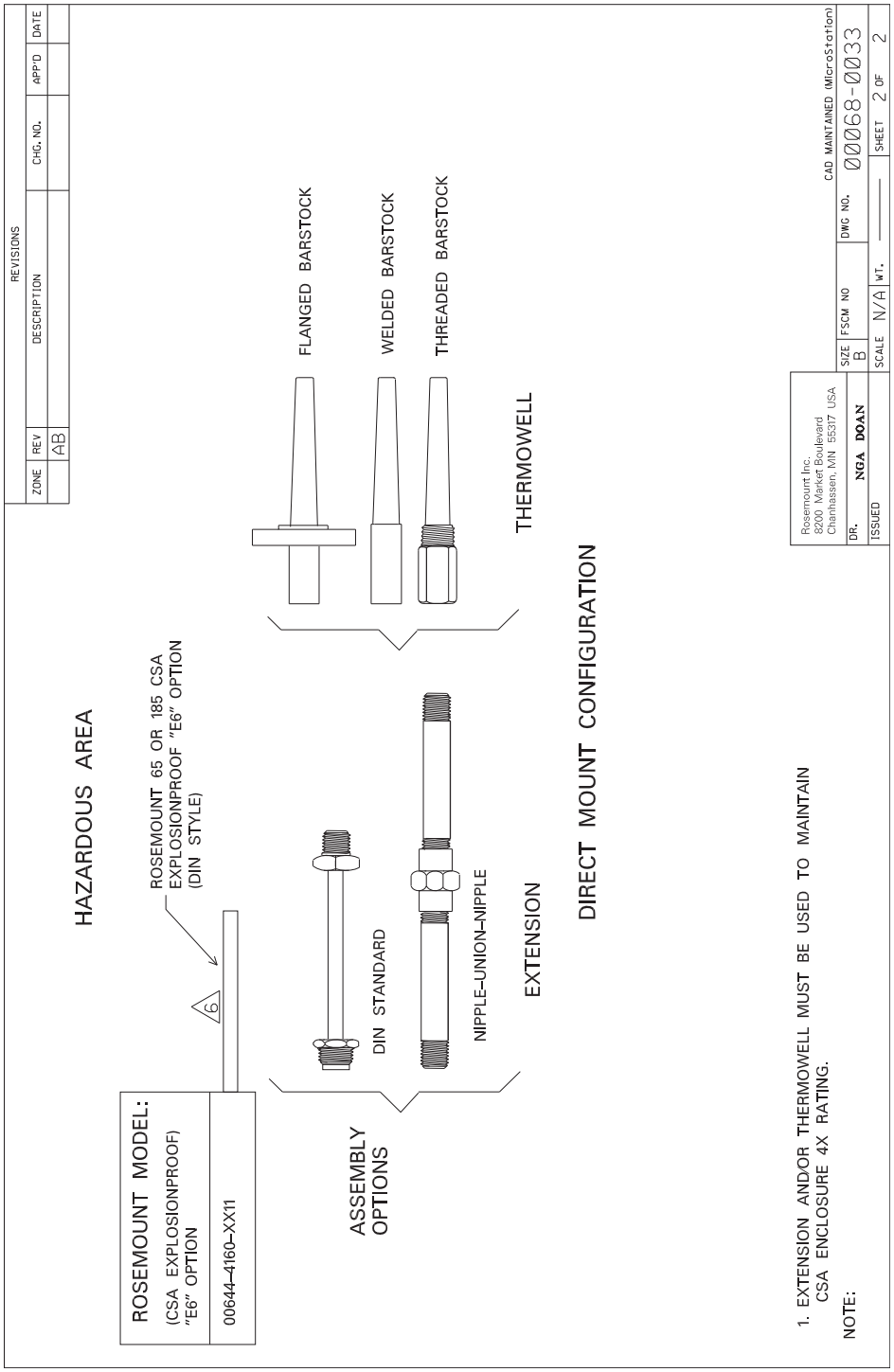

ATEX Flameproof

FIGURE 29. Installation Drawing 03144-0324, Rev. AB

CONFIDENTIAL AND PROPRIETARY INFORMATION IS CONTAINED HEREIN AND MUST BE HANDLED ACCORDINGLY

REVISIONS

REV	DESCRIPTION	CHG. NO.	APP'D	DATE
AA	NEW RELEASE	RTC1011243	D.B.	7/17/01
AB	CHANGE ISSEP REFERENCES TO KEMA	RTC1011874	D.B.	11/26/01

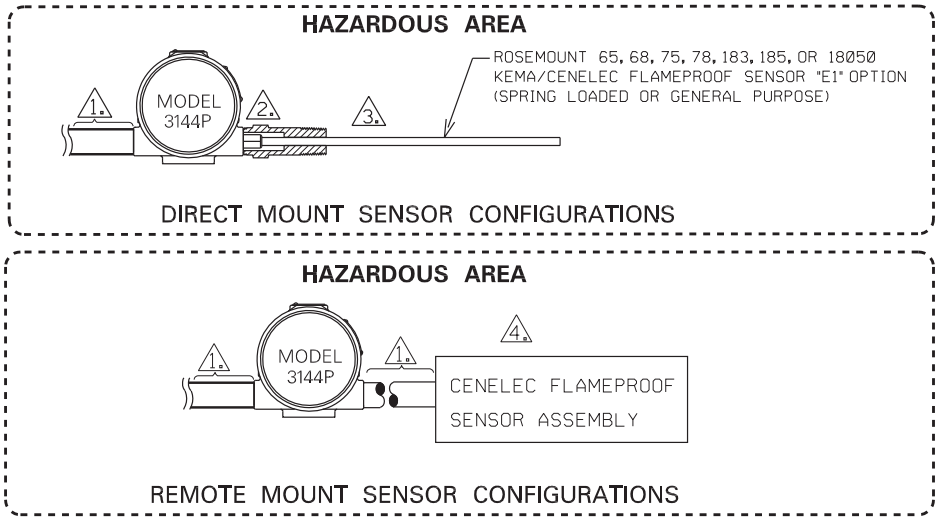

7. WAIT 10 SECONDS AFTER DISCONNECTING POWER BEFORE REMOVING COVER.
6. A CONDUIT PLUG MUST BE INSTALLED INTO ANY UNUSED CONDUIT ENTRIES.
5. ROSEMOUNT MODELS 3144P KEMA/CENELEC FLAMEPROOF APPROVAL Ex II 2 G
   DESCRIPTION: EEx d IIC T6 (Tamb= -40°C TO +70°C) T5 (-40°C TO +80°C).
   IP66

4. TEMPERATURE SENSOR ASSEMBLY MUST BE CENELEC APPROVED FOR APPROPRIATE AREA CLASSIFICATION.
3. SPRING LOADED SENSORS MUST USE A THERMOWELL ASSEMBLY.
2. THREADS MUST BE ASSEMBLED WITH LOCTITE THREAD SEALANT AND HAVE A MINIMUM OF FIVE FULL THREADS ENGAGEMENT AND 8 mm AXIAL LENGTH ENGAGEMENT.
1. INSTALL PER LOCAL INSTALLATION CODES.
   CENELEC APPROVED CABLE ENTRY OR STOPPING BOX REQUIRED.

CAD MAINTAINED (MicroStation)

UNLESS OTHERWISE SPECIFIED DIMENSIONS IN INCHES [mm]. REMOVE ALL BURRS AND SHARP EDGES. MACHINE SURFACE FINISH 125

-TOLERANCE-
.X ± .1 [2,5]
.XX ± .02 [0,5]
.XXX ± .010 [0,25]
FRACTIONS ± 1/32
ANGLES ± 2°

DO NOT SCALE PRINT

CONTRACT NO.
DR. NGA DOAN 6/29/01
CHK'D
APP'D. DIRK BAUSCHKE 7/17/01
APP'D. GOVT.

EMERSON. Process Management
ROSEMOUNT®
8200 Market Boulevard • Chanhassen, MN 55317 USA

TITLE INSTALLATION DRAWING: KEMA/CENELEC FLAMEPROOF TEMPERATURE MEASUREMENT ASSEMBLY (EI)

SIZE A | FSCM NO | DWG NO. 03144-0324
SCALE NONE | WT. ——— | SHEET 1 OF 1

Standard Association of Australia (SAA) Flameproof

FIGURE 30. Drawing 03144-0325, Rev. AD

CONFIDENTIAL AND PROPRIETARY INFORMATION IS CONTAINED HEREIN AND MUST BE HANDLED ACCORDINGLY

REVISIONS

REV	DESCRIPTION	CHG. NO.	APP'D	DATE
AC	ADD NOTES 8 & 9. CHANGE AMBIENT TEMPS IN NOTE 5. ADD TEFLON TAPE TO NOTE 2.	RTC1013713	D.B.	9/4/02
AD	CHANGE IP RATING IN NOTE 5	RTC1013808	D.B.	9/23/02

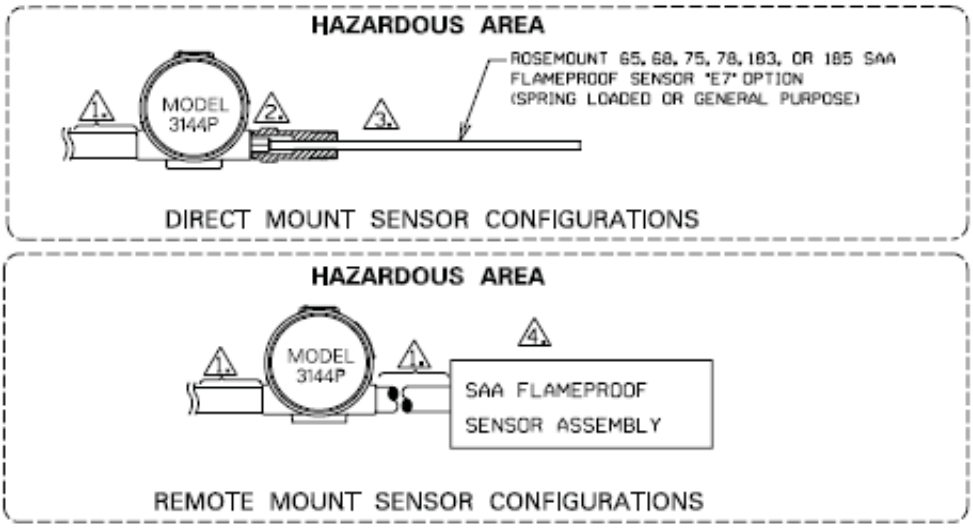

9. FOR A CERTIFICATION LABEL WITH MORE THAN ONE TYPE OF CERTIFICATION MARKING ON IT, ON COMPLETION OF COMMISSIONING THE APPARATUS, THE IRRELEVANT MARKING CODE(S) SHALL BE PERMANENTLY SCRIBED OFF.
8. COVERS ARE TIGHTENED TO METAL-TO-METAL SEAL WITH A TOOL.
7. WAIT 10 SECONDS AFTER DISCONNECTING POWER BEFORE REMOVING COVER.
6. A CONDUIT PLUG MUST BE INSTALLED INTO ANY UNUSED CONDUIT ENTRIES.
5. ROSEMOUNT MODELS 3144P SAA FLAMEPROOF
   APPROVAL DESCRIPTION: Ex d IIC T6 (Tamb= -20°C TO +60°C)
   IP66

4. TEMPERATURE SENSOR ASSEMBLY MUST BE SAA APPROVED FOR APPROPRIATE AREA CLASSIFICATION.

3. SPRING LOADED SENSORS MUST USE A THERMOWELL ASSEMBLY.

2. THREADS MUST BE ASSEMBLED WITH LOCTITE THREAD SEALANT OR TEFLON TAPE (PTFE) AND HAVE A MINIMUM OF FIVE FULL THREADS ENGAGEMENT AND 8 mm AXIAL LENGTH ENGAGEMENT.

1. INSTALL PER LOCAL INSTALLATION CODES.
   SAA APPROVED CABLE ENTRY OR STOPPING BOX REQUIRED.

CAD MAINTAINED (MicroStation)

UNLESS OTHERWISE SPECIFIED DIMENSIONS IN INCHES [mm]. REMOVE ALL BURRS AND SHARP EDGES. MACHINE SURFACE FINISH 125

-TOLERANCE-
.X ± .1 [2.5]
.XX ± .02 [0.5]
.XXX ± .010 [0.25]
FRACTIONS ± 1/32
ANGLES ± 2°

DO NOT SCALE PRINT

CONTRACT NO.
DR. NGA DOAN 8/7/01
CHK'D
APP'D DIRK BAUSCHE 8/17/01
APP'D. GOVT.

EMERSON Process Management
ROSEMOUNT®
8200 Market Boulevard • Chanhassen, MN 55317 USA

TITLE INSTALLATION DRAWING: SAA FLAMEPROOF TEMPERATURE MEASUREMENT ASSEMBLY (E7)

SIZE A | FSCM NO | DWG NO. 03144-0325
SCALE N/A | WT. ——— | SHEET 1 OF 1

Rosemount and the Rosemount logotype are registered trademarks of Rosemount Inc.
Teflon is a registered trademark of E.I. du Pont de Nemours & Co.
Hastelloy is a registered trademark of Haynes International.
Monel and Inconel is a registered trademark of International Nickel Co.
All other marks are the property of their respective owners.

Standard Terms and Conditions of Sale can be found at www.rosemount.com\terms_of_sale

Emerson Process Management

Rosemount Inc.
8200 Market Boulevard
Chanhassen, MN 55317 USA
T (U.S.) 1-800-999-9307
T (International) (952) 906-8888
F (952) 949-7001

www.rosemount.com

Emerson Process Management
Heath Place
Bognor Regis
West Sussex PO22 9SH
England
T 44 (1243) 863 121
F 44 (1243) 867 554

Emerson Process Management Asia Pacific Private Limited
1 Pandan Crescent
Singapore 128461
T (65) 6777 8211
F (65) 6777 0947
Enquiries@AP.EmersonProcess.com

EMERSON
Process Management

TERMS AND CONDITIONS OF SALE

These terms and conditions, the attendant quotation or acknowledgment, and all documents incorporated by reference therein, binds seller (i.e. Fisher Controls International LLC, Rosemount Inc., Fisher-Rosemount Systems Inc., or other Emerson Process Management Group Company) hereinafter the Seller, and the buyer, hereinafter Buyer, and constitutes the entire agreement (Agreement) between Buyer and Seller for the provision of services (Services) and/or the sale of goods (Goods) including (except as provided in Section 11) firmware incorporated therein.

1. PRICES: Unless otherwise specified by Seller, Seller's price for the Goods and/or Services shall remain in effect for thirty (30) days after the date of Seller's quotation or acceptance of the order for the Goods/Services, whichever is delivered first, provided an unconditional, complete authorization for the immediate manufacture and shipment of the Goods and/or provision of Services pursuant to Seller's standard order processing procedures is received and accepted by Seller within such time period. If such authorization is not received by Seller within such thirty (30) day period, Seller shall have the right to change the price for the Goods/Services to Seller's price in effect for the Goods/Services at the time the order is released to final manufacture. Prices for Goods do not cover storing, installing, starting up or maintaining Goods unless expressly stated in Seller's quotation. Notwithstanding the foregoing, the price for Goods/Services sold by Seller, but manufactured by others, shall be Seller's price in effect at the time of shipment to Buyer.

2. DELIVERY, ORDER ACCEPTANCE AND DOCUMENTATION: All shipping dates are approximate and are based upon Seller's prompt receipt of all necessary information from Buyer to properly process the order. Notwithstanding any provisions to the contrary in this or other documents related to this transaction, and regardless of how price was quoted, whether FOB, FAS, CIF or otherwise, legal title to the Goods and risk of loss thereto shall transfer to Buyer as follows: for sales in which the end destination of the Goods is within the United States, upon delivery to the freight carrier at the shipping point; for sales in which the end destination of the Goods is outside of the United States, immediately after the Goods have passed beyond the territorial limits of the United States. Acceptance of all orders placed by Buyer pursuant to this Agreement shall take place exclusively in Austin, Texas. Seller shall provide Buyer with that data/documentation which is specifically identified in the quotation. If additional copies of data/documentation or non-standard data/documentation are to be provided by Seller, they shall be provided to Buyer at Seller's price then in effect. Data/documentation marked as confidential or proprietary may not be reproduced or used for any purpose other than the purpose for which it was provided and may not be disclosed to third parties without the prior written permission of Seller.

3. EXCUSE OF PERFORMANCE: Seller shall not be liable for delays in performance or for non-performance due to failure or interruption of computer or telecommunication systems, acts of God, war, riot, fire, terrorism, labor trouble, unavailability of materials or components, explosion, accident, compliance with governmental requests, laws, regulations, orders or actions, or other unforeseen circumstances or causes beyond Seller's reasonable control. In the event of such delay, the time for performance or delivery shall be extended by a period of time reasonably necessary to overcome the effect of the delay.

4. TERMINATION AND SUSPENSION BY BUYER: Buyer may terminate or suspend its order for any or all of the Goods/Services covered by the Agreement only upon Seller's written consent or pursuant to Seller's applicable policy or practices covering such termination or suspension.

5. LIMITED WARRANTY: Subject to the limitations contained in Section 6 herein, Seller warrants that the licensed firmware embodied in the Goods will execute the programming instructions provided by Seller, and that the Goods manufactured by Seller will be free from defects in materials or workmanship under normal use and care and Services will be performed by trained personnel using proper equipment and instrumentation for the particular Service provided. The foregoing warranties will apply until the expiration of the applicable warranty period. Goods are warranted for twelve (12) months from the date of initial installation or eighteen (18) months from the date of shipment by Seller, whichever period expires first. Consumables and Services are warranted for a period of 90 days from the date of shipment or completion of the Services. Products purchased by Seller from a third party for resale to Buyer ("Resale Products") shall carry only the warranty extended by the original manufacturer. Buyer agrees that Seller has no liability for Resale Products beyond making a reasonable commercial effort to arrange for procurement and shipping of the Resale Products. If Buyer discovers any warranty defects and notifies Seller thereof in writing during the applicable warranty period, Seller shall, at its option, correct any errors that are found by Seller in the firmware or Services or repair or replace F.O.B. point of manufacture that portion of the Goods or firmware found by Seller to be defective, or refund the purchase price of the defective portion of the Goods/Services. All replacements or repairs necessitated by inadequate maintenance, normal wear and usage, unsuitable power sources or environmental conditions, accident, misuse, improper installation, modification, repair, use of unauthorized replacement parts, storage or handling, or any other cause not the fault of Seller are not covered by this limited warranty, and shall be at Buyer's expense. Seller shall not be obligated to pay any costs or charges incurred by Buyer or any other party except as may be agreed upon in writing in advance by Seller. All costs of dismantling, reinstallation and freight and the time and expenses of Seller's personnel and representatives for site travel and diagnosis under this warranty clause shall be borne by Buyer unless accepted in writing by Seller. Goods repaired and parts replaced by Seller during the warranty period shall be in warranty for the remainder of the original warranty period or ninety (90) days, whichever is longer. This limited warranty is the only warranty made by Seller and can be amended only in a writing signed by Seller. THE WARRANTIES AND REMEDIES SET FORTH ABOVE ARE EXCLUSIVE. THERE ARE NO REPRESENTATIONS OR WARRANTIES OF ANY KIND, EXPRESS OR IMPLIED, AS TO MERCHANTABILITY, FITNESS FOR PARTICULAR PURPOSE OR ANY OTHER MATTER WITH RESPECT TO ANY OF THE GOODS OR SERVICES.

6. LIMITATION OF REMEDY AND LIABILITY: SELLER SHALL NOT BE LIABLE FOR DAMAGES CAUSED BY DELAY IN PERFORMANCE. THE REMEDIES OF BUYER SET FORTH IN THIS AGREEMENT ARE EXCLUSIVE. IN NO EVENT, REGARDLESS OF THE FORM OF THE CLAIM OR CAUSE OF ACTION (WHETHER BASED IN CONTRACT, INFRINGEMENT, NEGLIGENCE, STRICT LIABILITY, OTHER TORT OR OTHERWISE), SHALL SELLER'S LIABILITY TO BUYER AND/OR ITS CUSTOMERS EXCEED THE PRICE TO BUYER OF THE SPECIFIC GOODS MANUFACTURED OR SERVICES PROVIDED BY SELLER GIVING RISE TO THE CLAIM OR CAUSE OF ACTION. BUYER AGREES THAT IN NO EVENT SHALL SELLER'S LIABILITY TO BUYER AND/OR ITS CUSTOMERS EXTEND TO INCLUDE INCIDENTAL, CONSEQUENTIAL OR PUNITIVE DAMAGES. THE TERM "CONSEQUENTIAL DAMAGES" SHALL INCLUDE, BUT NOT BE LIMITED TO, LOSS OF ANTICIPATED PROFITS, REVENUE OR USE AND COSTS INCURRED INCLUDING WITHOUT LIMITATION FOR CAPITAL, FUEL AND POWER, AND CLAIMS OF BUYER'S CUSTOMERS.

7. PATENTS: Subject to the limitations contained in Section 6, Seller shall defend any suits brought against Buyer based on a claim that use of the Goods manufactured by Seller constitutes an infringement of a valid patent of the United States, and shall pay any damages awarded therein against Buyer, provided that Buyer: promptly notifies Seller in writing of the filing of such suit or the threat thereof; permits Seller to control completely the defense or compromise of such claim of infringement; and provides all reasonable assistance and cooperation requested by Seller for the defense of such suit. In the event that only the Goods manufactured by Seller are held to be infringing in such suit and their use is enjoined, Seller shall, at its sole option and expense, provide a commercially reasonable alternative, including, but not limited to, procuring for Buyer the right to continue using the Goods, replacing them with a non-infringing product or modifying them so they become non-infringing. Buyer agrees that Seller shall not be liable for infringement, and that Buyer shall fully indemnify Seller therefore, if infringement is based upon the use of Goods in connection with goods not manufactured by Seller or in a manner for which the Goods were not designed by the Seller or if the Goods were not designed by the Seller or if the Goods were designed by the Buyer or were modified by or for the Buyer in a manner to cause them to become infringing.

8. TAXES: Any tax or governmental charge payable by the Seller because of the manufacture, sale or delivery of the Goods, or provision of Services, may at Seller's option be added to the price herein specified. The foregoing shall not apply to taxes based upon Seller's net income.

9. TERMS OF PAYMENT: Unless otherwise agreed by Seller, and subject to the approval of Seller's Credit Department, terms are F.O.B. shipping point, net 30 days from date of Seller's invoice in U.S. currency, except for applicable milestone payments or export shipments for which Seller may require other arrangements. Freight charges may include shipping and handling charges, and Buyer shall pay all such charges. If any payment owed to Seller hereunder is not paid when due, it shall bear interest, at a rate to be determined by Seller which shall not exceed the maximum rate permitted by law, from the date on which it is due until it is received. Seller shall have the right, among other remedies, either to terminate the Agreement or to suspend further deliveries under this and/or other agreements with Buyer in the event Buyer fails to make any payment hereunder when due. Buyer shall be liable for all expenses attendant to collection of past due amounts, including attorneys' fees.

10. SOFTWARE AND FIRMWARE: Notwithstanding any other provision herein to the contrary, Seller or applicable third party owner shall retain all rights of ownership and title in its respective firmware and software, including all copyrights relating to such firmware and software and all copies of such firmware and software. Except as otherwise provided herein, Buyer is hereby granted a nonexclusive, royalty free license to use firmware and software, and copies of firmware and software, incorporated into the Goods only in conjunction with such Goods and only at the Buyer's plant site where the Goods are first used. Buyer's use of certain firmware (as specified by Seller) and all other software shall be governed exclusively by Seller's and/or third party owner's applicable license terms.

11. BUYER SUPPLIED DATA: To the extent that Seller has relied upon any data or information supplied by Buyer to Seller ("Data") in the selection or design of the Goods and/or provision of the Services and the preparation of Seller's quotation, and the Data is inadequate or inaccurate, any warranties or other provisions contained herein which are affected by such conditions shall be null and void.

12. EXPORT/IMPORT: Buyer agrees to comply with all applicable import and export control laws, regulations, orders and requirements, including without limitation those of the United States and the European Union, and the jurisdictions in which the Seller and Buyer are established or from which items may be supplied.

13. GENERAL PROVISIONS: (a) Buyer shall not assign its rights or obligations under the Agreement without Seller's prior written consent. (b) There are no understandings, agreements or representations, express or implied, not specified in the Agreement. (c) No action, regardless of form, arising out of transactions under the Agreement, may be brought by either party more than two [2] years after the cause of action has accrued. (d) Any modification of these terms and conditions must be set forth in a written instrument signed by a duly authorized representative of Seller. (e) The Agreement is formed and shall be construed, performed and enforced under the laws of the State of Missouri. However, Buyer and Seller agree that the proper venue for all actions arising under the Agreement shall be only in the USA and in the State where the Goods involved in such actions were manufactured. (f) UNLESS OTHERWISE SPECIFICALLY PROVIDED IN SELLER'S QUOTATION, GOODS AND SERVICES HEREUNDER ARE NOT INTENDED FOR USE IN ANY NUCLEAR OR NUCLEAR RELATED APPLICATIONS. Buyer (i) accepts Goods and Services in accordance with the restriction set forth in the immediately preceding sentence, (ii) agrees to communicate such restriction in writing to any and all subsequent purchasers or users and (iii) agrees to defend, indemnify and hold harmless Seller from any and all claims, losses, liabilities, suits, judgments and damages, including incidental and consequential damages, arising from use of Goods and Services in any nuclear or nuclear related applications, whether the cause of action be based in tort, contract or otherwise, including allegations that the Seller's liability is based on negligence or strict liability. (g) The 1980 United Nations Convention on Contracts for the International Sale of Goods does not apply to this Agreement. (h) If any provision of the Agreement is invalid under any statute or rule of law, such provision, to that extent only, shall be deemed to be omitted without affecting the validity of the remainder of the Agreement (i) Seller specifically objects to the application of any Federal Acquisition Regulation ("FAR") provision or clause to the Agreement.

Leader in
Level Measurement

For Assistance Call 1-800-527-6297
Outside North America + 215-674-1234

Installation and Operating Instructions

Model 751 Slim-Line™
Submersible Level Transmitter

U.S. and Canada:	1-800-553-9092
24-Hour Service:	1-800-527-6297
International:	+1 215-674-1234
Fax:	+1 215-674-2731
E-mail:	drexelbrook.service@ametek.com
Website:	www.drexelbrook.com

AMETEK Drexelbrook makes no warranty of any kind with regard to the material contained in this manual, including, but not limited to, implied warranties or fitness for a particular purpose. Drexelbrook shall not be liable for errors contained herein or for incidental or consequential damages in connection with the performance or use of material.

Copyright © AMETEK Drexelbrook

EDO# 03-08-115
751-LM
Issue# 1

Model 751 Slim-Line™ Submersible Level Transmitter

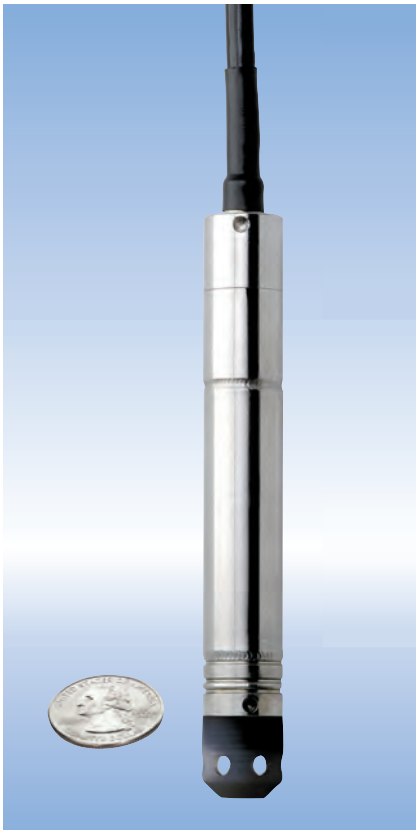

AMETEK®
DREXELBROOK
An ISO 9001 Certified Company

205 Keith Valley Road, Horsham, PA 19044
U.S. and Canada: 1-800-553-9092
24-Hour Service: 1-800-527-6297
International: +1 215-674-1234
Fax: +1 215-674-2731
E-mail: drexelbrook.info@ametek.com
Website: www.drexelbrook.com

Contents

Contents

Section 1: Introduction 1
1.1 System Description 1
1.2 Model Number 1

Section 2: Installation 3
2.1 Safety Information 3
2.2 Unpacking & Inspection 3
2.3 Operational Checkout 3
2.4 Mounting 4
2.4.1 Dimensions 4
2.4.2 Placement 4
2.4.3 Model 751 Slim-Line Transmitter 5
2.4.4 Provide Signal Noise Isolation 5
2.5 Wiring 6
2.5.1 Surge Protection 6
2.5.2 Lightning Protection Wiring 7
2.5.3 Lightning Protection Installation Concept 8

Section 3: Accessories 9
3.1 Parts & Accessories 9
3.2 Ordering Parts & Accessories 9

Section 4: Troubleshooting 11
4.1 Problem/Cause/Checks 11
4.2 Factory Assistance 11
4.3 Field Service 12
4.4 Equipment Return 13

Section 5: Specifications 15
5.1 Model 751 Slim-Line Transmitter 15
5.1.1 Functional Specifications 15
5.1.2 Performance Specifications 15
5.1.3 Physical Specifications 15

Section 1

Section 1: Introduction

1.1 System Description

The Model 751 Slim-Line Submersible Level Transmitter is a solid state instrument designed for direct submergence in liquid for quick, accurate and reliable level measurements. The 0.69 inch diameter housing allows the unit to fit into small bore applications. The transmitter indicates the level of liquid by continuously measuring hydrostatic pressure via its sensing element, an ion implanted silicon chip consisting of a full Wheatstone bridge circuit used with a 316L stainless steel diaphragm to seal the element from corrosive fluids. It then transmits the level via a 4-20 mA output signal. All the electronics are mounted in a submersible 316 stainless steel housing protected by a removable snubnose threaded sensing port.

The electrical connection is a 3 wire, 20 gauge shielded waterproof cable which is vented at the surface end to reference atmospheric pressure. The cable support provides extra stability for longer lengths of cable or for use with agitated liquids.

1.2 Model Number

Technology
- **751** Slim-Line Level Transmitter

Sensing Port
- **S** 9/16-18 thread with Delrin snubnose

Input/Output
- **B** 11 to 30 VDC/4 to 20 mA

Pressure Range*
- **XXXX** Pressure range in psig
- **BXXX** Pressure range in barg
- **0015** 0 to 15 psi/0 to 1 bar (0 to 34.6 ft./0 to 10.5 m water)
- **0030** 0 to 30 psi/0 to 2 bar(0 to 69 ft./0 to 21.1 m water)
- **0060** 0 to 60 psi/0 to 4 bar(0 to 138 ft./0 to 42.2 m water)
- **0100** 0 to 100 psi/0 to 7 bar(0 to 230 ft./0 to 70.3 m water)
- **0150** 0 to 150 psi/0 to 10 bar(0 to 345 ft./0 to 105.4 m water)

Electrical Connection**
- **N** Nut (Standard)

Diaphragm Material
- **L** 316L stainless steel (Standard)

Fill Fluid
- **S** Silicone oil (Standard)

Grommet Material
- **V** Viton (Standard)

Cable Length
- **XXX** (Specify length in feet)

751	S	B		N	L	S	V	

* *Contact factory for other ranges*

** *Contact factory for electrical connection options*

Section 2

Section 2: Installation

2.1 Safety Information

NOTICE

The 751 Slim-Line Transmitter is designed for use within installation Category II Environments as defined in IEC664: 1980/PD6499: -1981 and UL 873. The overall system is designed to prevent accidental shock to the operator when properly used. No design, however, can insure the safety of an instrument improperly installed or used negligently. Read this manual carefully and completely before operating the instrument. Failure to read this manual in its entirety could result in damage to the instrument or injury to the operator.

To avoid possible shock hazard install in a grounded enclosure, prevent live parts being touched and ground the sensor sheath and housing. Follow wiring diagrams and local regulations. Installations where failure of this equipment may cause personal injury, property loss, equipment damage or financial loss, backup failsafe protection must be used.

2.2 Unpacking & Inspection

Carefully remove the contents of the shipping carton and check each item against the packing list before destroying any packing material. If there is any shortage or damage, report it to the factory immediately.

When this transmitter is used with the AMETEK Drexelbrook CDM Controller, the transmitter Model Number is identified on the nameplate of the CDM in the section labeled "USED WITH." This is because the CDM is calibrated with, and should be used only with a specific Submersible Transmitter. Look for a correlation between the two instruments.

2.3 Operational Checkout

Before installing the 751 Slim-Line Transmitter, make sure the system is operating by doing a bench check.

WARNING:
Do not connect any wires while AC Power input is applied.

For temporary connections, refer to diagrams in Wiring Section 2.3 of this manual. Connect AC power to the controller and/or with which it is to be used. Apply power and allow a five-minute warm-up.

With no pressure applied to the transmitter, the meter should display zero (or for "drawdown" the reading corresponding to the depth below ground level that the transmitter will be when installed.)

2.3 Operational Checkout (continued)

CAUTION: Do not simulate an increase in pressure by applying mechanical force to the sensing diaphragm of the transmitter. Excessive force will result in damage to or destruction of the transmitter.

When pressure is applied to the transmitter, the display should increase, and then return to the original reading when pressure is removed. The Transmitter can be pressurized by lowering it into water or by applying air pressure from a calibration device. To apply air pressure unscrew the snubnose and replace it with a 1/2 " NPT pressure fitting.

2.4 Mounting

2.4.1 Dimensions

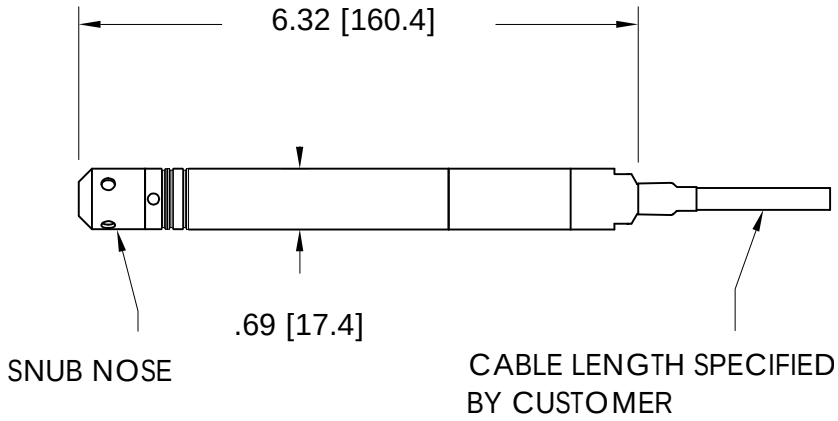

Figure 2-1
Mounting Dimensions

2.4.2 Placement

The Well WatcherTM Model 751 Slim-Line Transmitter can be suspended in a well or tank supported only by its attached shielded electrical cable. Ensure that the opening in the well or tank cover is large enough for possible future removal of the transmitter.

Additional support can be provided when the transmitter is being used under circumstances of excess stress, such as when submerged in agitated water or when suspended with electrical cable longer than 300 ft. The cable support feature on the transmitter provides this extra strain relief.

CAUTION: Do not allow transmitter to remain in liquid when it freezes solid. This will apply mechanical force to the sensing diaphragm of the transmitter. Excessive force will result in transmitter damage or destruction.

2.4.3 Model 751 Slim-Line Transmitter

CAUTION: The cable grommet is specially installed by factory-trained personnel to assure that it remains watertight. Any adjustment or removal of the grommet may destroy the watertight feature thus exposing the transmitter to water seepage, causing an electrical short and transmitter failure. Any adjustment or removal of the cable grommet voids the warranty.

CAUTION: The waterproof cable should not be kinked or nicked, which will allow water to seep into the cable and short out the transmitter.

CAUTION: The surface end of the cable should NOT be sealed since it references the transmitter to atmospheric pressure.

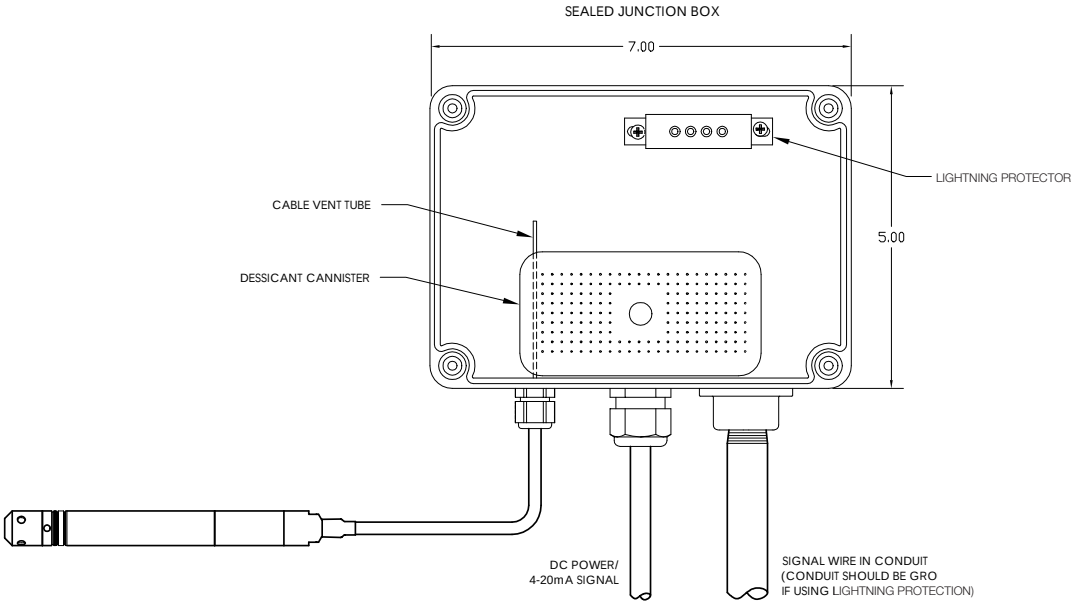

Figure 2-2
Transmitter Installation Considerations

2.4.4 Provide Signal Noise Isolation

The transmitter should not be mounted close to high current switching relays or in an enclosure containing such relays. Low voltage wiring (transmitter signal wires and analog output wires) should be separated from high voltage wiring (115, 230 & 440 Vac) and should be shielded.

2.5 Wiring

WARNING:
Do not connect any wires while AC Power input is applied.

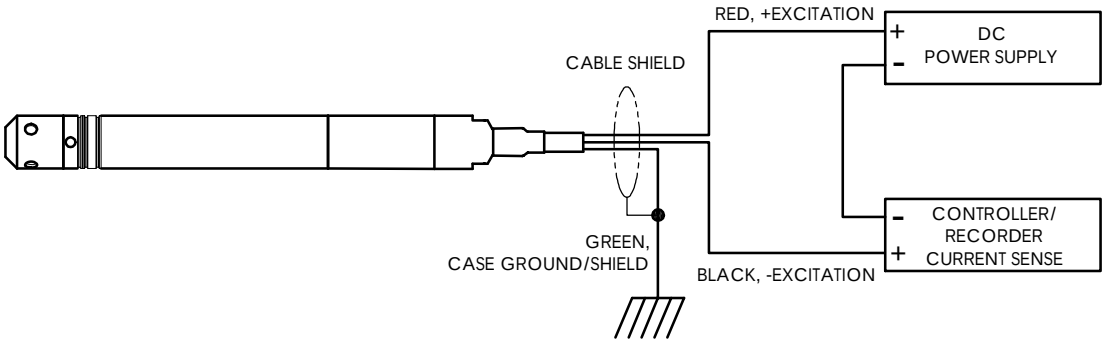

Figure 2-3
Transmitter Wiring Identification

2.5.1 Surge Protection

Surge protectors are available as an option item (see Parts & Accessories in Section 3 of this manual). It is strongly recommended to protect from secondary surges and lightning on outdoor installations. Install in accordance with the applicable drawing that is supplied with the surge protector and the following instructions:

1. Lightning protection devices should be placed as close to the meter or transmitter as possible and wired in accordance with Local Electrical Codes in an approved watertight enclosure.
2. If the distance between the meter and transmitter, or meter and recorder is less than 100 ft., only one protector per line is needed.
3. Use No. 8 AWG ground wire or better from protector.

NOTICE

4. Keep ground wire less than one foot long and tie to a suitable ground rod or metal frame ground. Surge capability is only as good as the grounding method. **All ground connections must be installed**.
5. Install protectors in weather-tight enclosures.
6. Run signal lines shielded and away from power lines.
7. Mount the fused switch panel as close to the meter as possible. Wire according to the Local Electrical Code.
8. Lead lines for 110 Vac and 220 Vdc protectors should be cut as short as practical.

2.5.1 Surge Protection (Continued)

CAUTION: This or any installation can not protect against a direct lightning strike, or secondary strikes of sufficient magnitude. AMETEK cannot accept liability for damage due to lightning or secondary surges.

2.5.2 Lightning Protection Wiring

Here is a typical wiring arrangement to a controller/ meter. Shown here are connectors to the AMETEK Drexelbrook CDM Controller.

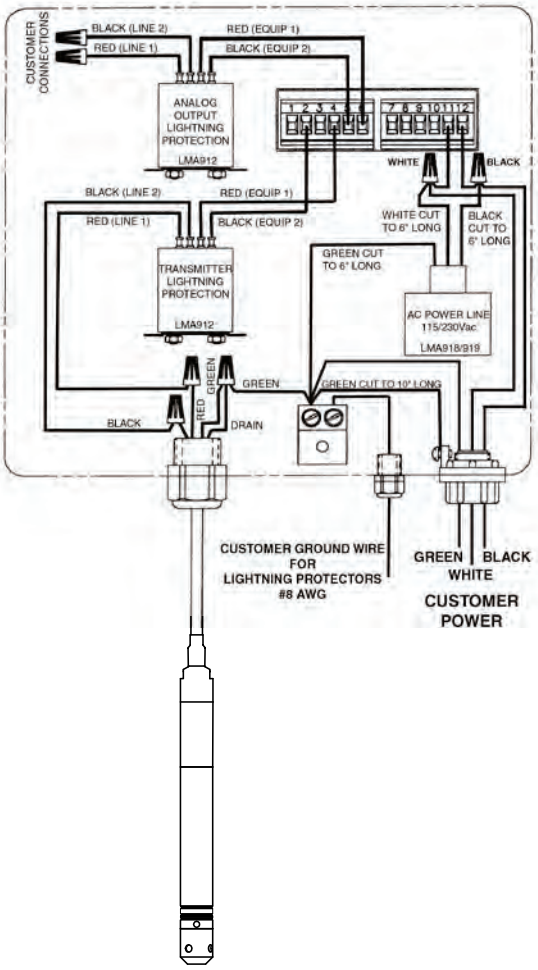

Figure 2-4
Wiring with Lightning Protection Options

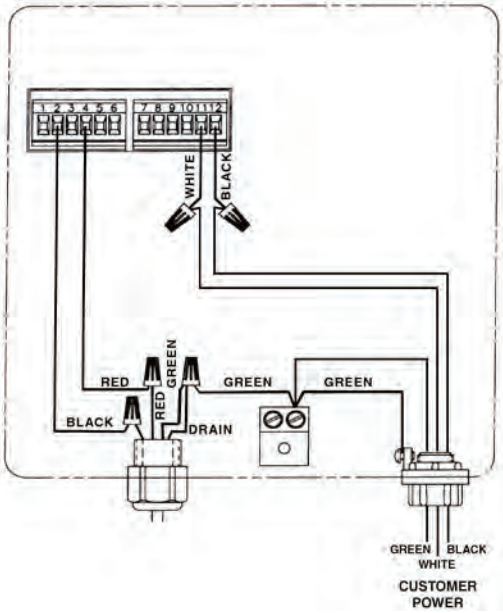

Figure 2-5
Wiring with NO lightning Protection Options

2.5.3 Lightning Protection Installation Concept

1. Lightning protection devices should be placed as close to the instrument as possible.

2. If the distance between the meter and transmitter, or the meter and recorder is less than 100 ft., only 1 protector per line may be used.

3. This or any installation cannot protect against a direct lightning strike, or secondary strikes of sufficient magnitude. AMETEK Drexelbrook cannot accept responsibility for damage due to lightning or secondary surges.

4. Proper installation including grounding require detailed installation drawing. Consult factory.

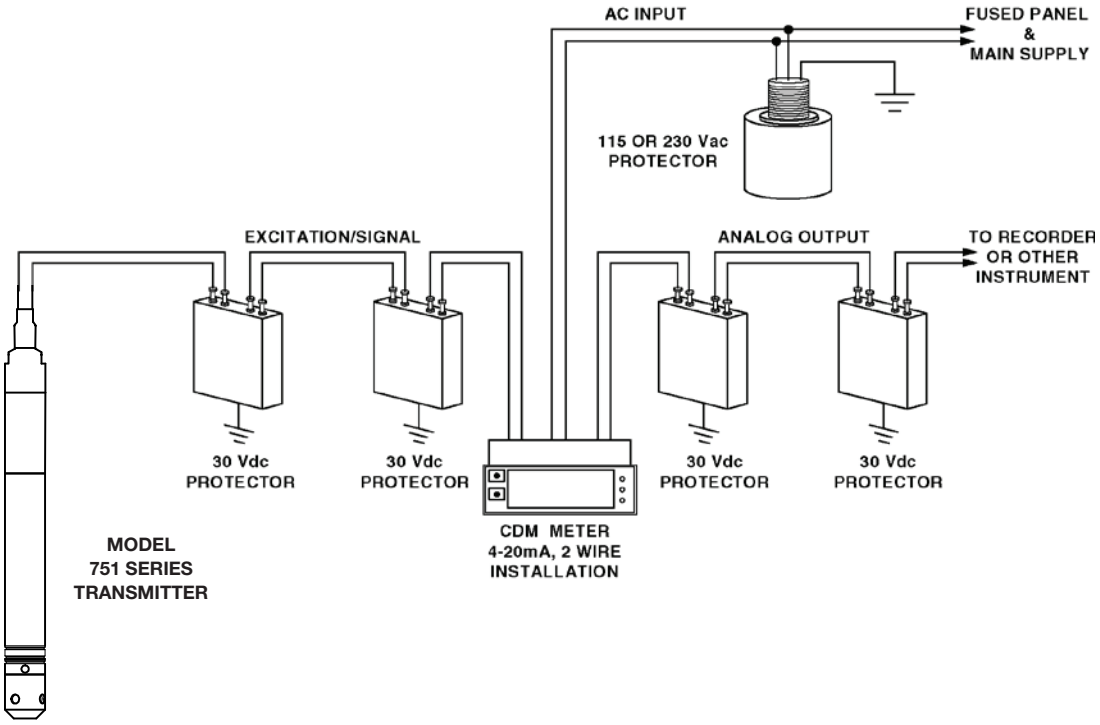

Figure 2-6
Lightning Protection Concept

Section 3: Accessories

3.1 Parts & Accessories

LMA912

30Vdc Lightning and surge protector for excitation and signal lines to the milliampere transmitter or meter analog output lines to other instruments

LMA918

Lightning & surge protector for 115Vac input line to a controller /meter

LMA919

Lightning & surge protector for 230Vac input line to a controller/meter

3.2 Ordering Parts & Accessories

When ordering replacement parts, supply the following information:

1. Part description and part number.
2. Quantity of each item required.
3. Shipping instructions and address.

Contact your local AMETEK Drexelbrook representative,
or Mail, Telephone or Fax Orders to:
AMETEK DrexelbrooK
205 Keith Valley Road
Horsham, PA 19044-1499
215-674-1234; FAX: (215) 674-2731

Section 4

Section 4: Troubleshooting

WARNING:
If the Level Measurement System is located in a hazardous environment, do not open the enclosure cover or make/break any electrical connections without first disconnecting electrical power at the source. Ensure that the wiring, electrical fittings and conduit connections conform to the electrical codes for the specific location and hazard level.

4.1 Problem/Cause/Checks

Controller/meter Display Drifting:
May be water in cable causing short circuit; look for kink or damaged cable; check for broken wires, loose or corroded connections, or obvious short circuits;

NOTICE

With transmitter wires disconnected, resistance between red or black lead and shield should not exceed 15 megohms.

Controller/meter Display Incorrect:
May be wrong transmitter connections; check wiring.
May be defective transmitter; check as above, replace transmitter.
May also be controller/meter problems, such as calibration.

4.2 Factory Assistance

AMETEK Drexelbrook can answer any questions about this, or any Drexelbrook instrument. Call Customer Service at:
1-800-553-9092 (US and Canada) or
+1 215 674-1234 (International).

If you require assistance and attempts to locate the problem have failed:

Contact your local Drexelbrook representative,

Telephone the Service department toll-free:
- 1-800-527-6297 (US and Canada)
- +1 215 674-1234 (International)

FAX: Service Department + 215-443-5117
E-Mail: drexelbrook.service@ametek.com

4.2 Factory Assistance (Continued)

Please provide the following information:

- Instrument Model Number
- Sensing Element Model Number and Length
- Original Purchase Order Number
- Material being measured
- Temperature
- Pressure
- Agitation
- Brief description of the problem
- Checkout procedures that have failed

4.3 Field Service

Trained field servicemen are available on a time-plus-expense basis to assist in start-ups, diagnosing difficult application problems, or in-plant training of personnel. Contact the service department for further details.

4.4 Equipment Return

In order to provide the best service, any equipment being returned for repair or credit must be pre-approved by the factory.

In many applications, sensing elements are exposed to hazardous materials.

- **OSHA mandates** that our employees be informed and protected from hazardous chemicals.
- **Material Safety Data Sheets (MSDS)** listing the hazardous materials to which the sensing element has been exposed MUST accompany any repair.
- It is your responsibility to fully disclose all chemicals and **decontaminate** the sensing element.

To obtain a return authorization (RA#), contact the Service department at 1-800-527-6297 (US and Canada) or + 215-674-1234 (International).

- Please provide the following information:
- Model Number of Return Equipment
- Serial Number
- Original Purchase Order Number
- Process Materials to which the equipment has been exposed.
- MSDS sheets for any hazardous materials
- Billing Address
- Shipping Address
- Purchase Order Number for Repairs
- Please include a purchase order even if the repair is under warranty. If repair is covered under warranty, you will not be charged.

Ship equipment freight prepaid to:

AMETEK-DREXELBROOK.
205 KEITH VALLEY ROAD
HORSHAM, PA 19044-1499
COD shipments will not be accepted

Section 5

Section 5: Specifications

5.1 Model 751 Slim-Line Transmitter

5.1.1 Functional Specifications

Range Limits: .....Reference Model Code
Output: .....4-20 mAdc, limited to 30 mAdc
Power Supply: .....11 to 30VDC w/polarity protection
Temperature Limits (Damage will occur in freezing liquids)**:**
Ambient Operating: ..-13ºF to 167ºF (-15ºC to 75ºC)
Storage: .....-40ºF to 180ºF (-40ºC to 82ºC)
Loop Resistance: .....900 ohms max @ 24 volts

5.1.2 Performance Specifications

Accuracy: .....+0.30% Full Scale, Including linearity Best Fit Straight Line (BFSL), hysteresis, and repeatability; +0.50% full scale (6 psi range only)
Stability: .....+0.5% Full Scale
Temperature Effect:.....32°F to 122°F (-0°C to 53°C); +1% Upper Range Limit (URL) for 77°F (25°C) temperature change within compensated range.
Power Supply Effect:.....+0.005% Full Scale per Volt
Proof Pressure: .....200% Upper Range Limit (URL)
Burst Pressure: .....150% Upper Range Limit (URL)

5.1.3 Physical Specifications

Materials of Construction
Cable Jacket .....Polyurethane
Diaphragm.....Type 316L Stainless Steel
Cover.....Type 316 Stainless Steel
Nut/Washer.....Type 316 Stainless Steel
Cable Grommet.....Viton
Snub Nose .....Delrin, 9/16 - 18 Thread (Removable)
Electrical Connection:...20 AWG Shielded Cable, Assembled at factory
Weight: .....8oz (227 g)

Form 440-0001-001 3/1/2006

TERMS AND CONDITIONS OF SALE

GENERAL: ***ALL ORDERS ARE SUBJECT TO THE FOLLOWING TERMS AND CONDITIONS. ANY ACCEPTANCE OF ANY OFFER OF BUYER FOR ANY GOODS OR SERVICES IS CONDITIONED UPON THESE TERMS AND CONDITIONS, AND SELLER OBJECTS TO ANY ADDITIONAL OR DIFFERENT TERMS PROPOSED BY BUYER IN ANY DOCUMENT, WHICH SHALL NOT BE BINDING UPON SELLER.*** No salesman or other party is authorized to bind the AMETEK DREXELBROOK Division of AMETEK, Inc. (hereinafter "Seller") by any agreement, warranty, statement, promise, or understanding not herein expressed, and no modifications shall be binding on Seller unless the same are in writing and signed by an executive officer of Seller or his or her duly authorized representative. Verbal orders shall not be executed until written notification has been received and acknowledged by Seller.

QUOTATIONS: Written quotations are valid for thirty (30) days unless otherwise stated. Verbal quotations expire the same day they are made.

PRICES: All prices and terms are subject to change without notice. Buyer-requested changes to its order ("Orders"), including those affecting the identity, scope and delivery of the goods or services, must be documented in writing and are subject to Seller's prior approval and adjustments in price, schedule and other affected terms and conditions. Orders requiring certified test data in excess of commercial requirements, are subject to a special charge.

ORDER ACCEPTANCE: All Orders are subject to final approval and acceptance by Seller at its office located at 205 Keith Valley Road, Horsham, Pennsylvania 19044.

TERMS OF PAYMENT: Seller's standard terms of payment for Buyers who qualify for credit are net thirty (30) days from date of invoice. All invoices must be paid in United States dollars.

CREDIT: Seller reserves the right at any time to revoke any credit extended to Buyer or otherwise modify terms of payment if Buyer fails to pay for any shipments when due or if in Seller's opinion there is a material adverse change in Buyer's financial condition. Seller may, at its option, cancel any accepted Order if Buyer fails to pay any invoices when due.

DELIVERY: Shipments are F.O.B place of manufacture ("Shipping Point") and the Buyer shall pay all freight, transportation, shipping, duties, fees, handling, insurance, storage, demurrage, or similar charges from Shipping Point. Delivery of goods to common carrier shall constitute delivery and passing of title to the Buyer, and all risk of loss or damage in transit shall be borne by Buyer. Any claims or losses for damage or destruction after such delivery shall be the responsibility of Buyer.

Seller reserves the right to make delivery in installments which shall be separately invoiced and paid for when due, without regard to subsequent deliveries. Delay in delivery of any installment shall not relieve Buyer of its obligation to accept remaining deliveries.

Acknowledged shipping dates are approximate only and based on prompt receipt of all necessary information from Buyer and Buyer's compliance with terms of payment.

TAXES: All sales, excise and similar taxes which Seller may be required to pay or collect with respect to the goods and/or services covered by any Order, shall be for the account of the Buyer except as otherwise provided by law or unless specifically stated otherwise by Seller in writing.

TERMINATION AND HOLD ORDERS: No Order may be terminated by Buyer except upon written request by Buyer and approval by Seller, and if said request is approved by Seller, under the following conditions: (1) Buyer agrees to accept delivery of all of the units completed by Seller through the workday on which Seller receives the written termination request; (2) Buyer agrees to pay to Seller all direct costs and expenses applicable to the portion of the Order that is incomplete.

WARRANTY:

A. Hardware: Seller warrants its goods against defects in materials and workmanship under normal use and service for one (1) year from the date of invoice.

B. Software and Firmware: Unless otherwise specified, Seller warrants for a period of one (1) year from date of invoice that standard software or firmware, when used with Seller specified hardware, shall perform in accordance with Seller's published specifications. Seller makes no representation or warranty, expressed or implied, that the operation of the software or firmware shall be uninterrupted or error-free, or that functions contained therein shall meet or satisfy the Buyer's intended use or requirements.

C. Services: Seller warrants that services, including engineering and custom application, whether provided on a fixed cost or time and material basis, shall be performed in accordance with generally accepted industry practices.

D. Remedies: Seller's liability under this section is restricted to replacing, repairing, or issuing credit (at Seller's option) for any returned goods and only under the following conditions: (1) Seller must be promptly notified, in writing, as soon as possible after the defects have been noted by the Buyer, but not later than (1) year from date of invoice from Seller; (2) The defective goods are to be returned to the place of manufacture, shipping charges prepaid by the Buyer; (3) Seller's inspection shall disclose to its satisfaction that the goods were defective in materials or workmanship at the time of shipment; (4) Any warranty service (consisting of time, travel and expenses related to such services) performed other than at Seller's factory, shall be at Buyer's expense.

E. Repaired/Reconditioned Goods: As to out-of-warranty goods which Seller has repaired or reconditioned, Seller warrants for a period of sixty (60) days from date of its invoice only new components replaced in the most recent repair/reconditioning.

F. Returns and Adjustments: No goods may be returned unless authorized in advance by Seller and then only upon such conditions to which Seller may agree. Buyer must obtain an RMA (Return Material Authorization) number from Seller prior to any return shipment and such RMA number must appear on the shipping label and packing slip. Buyer shall be responsible for the returned goods until such time as Seller receives the same at its plant and for all charges for packing, inspection, shipping, transportation, or insurance associated with returned goods. In the event that credit for returned goods is granted, it shall be at the lesser of the then current prices or the original purchase price. Claims for shortage or incorrect material must be made within five (5) days after receipt of shipment.

ALL OTHER WARRANTIES, FOR ANY OF SELLER'S GOODS OR SERVICES, WHETHER ORAL, WRITTEN, EXPRESS, IMPLIED, STATUTORY OR OTHERWISE, INCLUDING WITHOUT LIMITATION ANY IMPLIED WARRANTY OF MERCHANTABILITY OR FITNESS FOR PURPOSE ARE EXCLUDED.

INTELLECTUAL PROPERTY: Seller's sale of goods or provision of related documentation or other materials to Buyer shall not transfer any intellectual property rights to Buyer unless Seller specifically agrees to do so in writing. Seller shall retain ownership of all applicable patents, trademarks, copyrights and other intellectual property rights. Buyer shall not use, copy or transfer any such items in violation of Seller's intellectual property rights or applicable law, or for any purposes other than that for which the items were furnished.

Seller shall defend any lawsuit brought against the Buyer based on a claim that the design or construction of the goods sold hereunder by Seller infringe any United States or Canadian Patent, Copyright or Mask Work Registration, provided that Buyer promptly notifies Seller of such claim in writing and further provided that, at Seller's expense, (1) Buyer gives Seller the sole right to defend or control the defense of the suit or proceeding, including settlement, and (2) Buyer provides all necessary information and assistance for that defense. In the event of a charge of infringement, Seller's obligation under the agreement shall be fulfilled if Seller, at its option and expense, either (i) settles such claim; (ii) procures for Buyer the right to continue using such goods; (iii) replaces or modifies goods to avoid infringement; or (iv) accepts the return of any infringing goods and refunds their purchase price; or (iv) defends against such claim.

If Buyer furnishes specifications or designs to Seller, the obligations of Seller set forth above shall not apply to goods made by Seller using such specifications or designs, and Buyer shall defend, indemnify and hold Seller harmless against any third party claims for infringement which arise out of Seller's use of specifications or designs furnished by Buyer.

SOFTWARE LICENSE: If goods purchased hereunder include software ("Software"), Buyer may use the Software only as part of the goods. Buyer may not use, copy, or transfer any of the Software except as may be permitted under the applicable License Agreement provided with the goods. Buyer's right to use, copy or transfer the Software shall terminate upon termination of Buyer's right to use the goods.

PACKAGING/WEIGHTS AND DIMENSIONS: Buyer specified packing or marking may be subject to additional charges not otherwise included in the price of the goods. Published weights and dimensions are estimates or approximate only and are not warranted.

FORCE MAJEURE: Seller shall not be responsible for delays in delivery or any failure to deliver due to causes beyond Seller's control, including but not limited to the following items: acts of God, war, terrorism, mobilization, civil commotion, riots, embargoes, domestic or foreign governmental regulations or orders, governmental priorities, port congestion, acts of the Buyer, its agents or employees, fires, floods, strikes, lockouts and other labor difficulties, shortages of or inability to obtain shipping space or transportation, inability to secure fuel, supplies or power at current prices or on account of shortages thereof, or due to limitations imposed by the extent of availability of Seller's normal manufacturing facilities.

If a delay excused per the above extends for more than ninety (90) days and the parties have not agreed upon a revised basis for continuing providing the goods or services at the end of the delay, including adjustment of the price, then Buyer, upon thirty (30) days' prior written notice to Seller may terminate the Order with respect to the unexecuted portion of the goods or services, whereupon Buyer shall promptly pay Seller its reasonable termination charges upon submission of Seller's invoices thereof.

LIMITATION OF LIABILITY: Seller's liability for any claim of any kind, except infringement of intellectual property rights, shall not exceed the purchase price of any goods or services which give rise to the claim. ***SELLER SHALL IN NO EVENT BE LIABLE FOR BUYER'S MANUFACTURING COSTS, LOST PROFITS, LOSS OF USE OF THE GOODS OR SERVICES, COST OF CAPITAL, COST OF SUBSTITUTE GOODS, FACILITIES, SERVICES OR REPLACEMENT POWER, DOWNTIME COSTS, CLAIMS OF BUYER'S CUSTOMERS FOR DAMAGES, OR OTHER SPECIAL, PROXIMATE, INCIDENTAL, INDIRECT, EXEMPLARY OR CONSEQUENTIAL DAMAGES.*** Any action against Seller must be brought within eighteen (18) months after the cause of action accrues. These disclaimers and limitations of liability shall apply regardless of the form of action, whether in contract, tort or otherwise, and further shall extend to the benefit of Seller's vendors, appointed distributors and other authorized resellers as third-party beneficiaries.

PROHIBITION FOR HAZARDOUS USE: Goods sold hereunder generally are not intended for application in and shall not be used by Buyer in the construction or operation of a nuclear installation or in connection with the use or handling of nuclear material, or for any hazardous activity or critical application, where failure of a single component could cause substantial harm to persons or property, unless the goods have been specifically approved for such a use or application. Seller disclaims all liability for any loss or damage resulting from such unauthorized use and Buyer shall defend, indemnify and hold harmless the Seller against any such liability, whether as a result of breach of contract, warranty, tort (regardless of the degree of fault or negligence), strict liability or otherwise.

EXPORT CONTROL: Buyer shall comply with all export control laws and regulations of the United States, and all sales hereunder are subject to those laws and regulations. Seller shall not be named as shipper or exporter of record for any goods sold hereunder unless specifically agreed to in writing by Seller. At Seller's request, Buyer shall furnish Seller with end-use and end-user information to determine export license applicability. Buyer warrants, in accordance with U.S. Export Law, that goods sold hereunder shall not be destined for facilities or activities involving nuclear, chemical or biological weapons, or related missile delivery systems in named prohibited regions or countries.

GOVERNING LAW: Seller intends to comply with all laws applicable to its performance under any order. All matters relating to interpretation and effect of these terms and any authorized changes, modifications or amendments thereto shall be governed by the laws of the Commonwealth of Pennsylvania. No government contract regulations or clauses shall apply to the goods or services, this agreement, or act to bind Seller unless specifically agreed to by Seller in writing.

NON-WAIVER BY SELLER: Waiver by Seller of a breach of any of these terms and conditions shall not be construed as a waiver of any other breach.

SEVERABILITY AND ENTIRE AGREEMENT: If any provision of these terms and conditions is unenforceable, the remaining terms shall nonetheless continue in full force and effect. This writing, together with any other terms and conditions Seller specifically agrees to in writing, constitutes the entire terms and conditions of sale between Buyer and Seller and supercedes any and all prior discussions, and negotiations on its subject matter.

AMETEK®
DREXELBROOK

An ISO 9001 Certified Company

205 Keith Valley Road, Horsham, PA 19044
U.S. and Canada: 1-800-553-9092
24-Hour Service: 1-800-527-6297
International: +1 215-674-1234
Fax: +1 215-674-2731
E-mail: drexelbrook.info@ametek.com
Website: www.drexelbrook.com

EPM Series Reversing Electric Actuators

Innovative Quarter-Turn Actuators that Look the Same on the Outside–with the Hayward Difference on the INSIDE!

Overview

On/Off and Proportional Control Models

Designed for use with all ball and butterfly valves up to 24″ in size and torque outputs from 300-13,500 in. lb, all on/off and proportional control models feature a Modular Design and Superior Gear Design as standard.

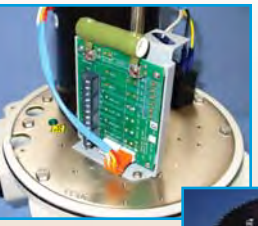

Unique EPM Standard Features:

Modular Design

All EPM Series actuators utilize modular PC boards designed and manufactured in North America. By eliminating 90% of the internal wiring found in most actuation products, we're producing a higher quality, more reliable product that is easier to install, operate, and maintain.

Superior Gear Design

All EPM Series actuators employ an epicyclic gear design to provide tough, dependable torque transmission in a compact, quiet, smooth package.

Thermal Management

Our Proportional Control Actuators utilize proprietary, micro-processor-based algorithms to automatically control motor temperatures in real time with close-loop feedback.

Data Logging and Diagnostics

Our Proportional Control Actuators respond to a variety of control signals which are user-selectable through a simple joystick/menu interface. The microprocessor-based control monitors and records operating parameters that can be used for process diagnostics, advanced alarming functions or maintenance scheduling.

Proportional Control Models

All EPM Series Proportional Control Models feature added Thermal Management and Data Logging and Diagnostics capabilities not found on the basic EPM on/off models.

Other Standard Features

- Four Limit Switches (Two Auxiliary)
- Internal Low Power Heater
- NEMA 4/4X Enclosure
- Position Indicator
- Clutchless Manual Override
- Self-Locking Drive
- Permanently Lubricated
- Thermal Overload Protection
- CE and CSA Approved
- ISO 5211 Mounting Base
- Choice of Voltages: 12 VAC/DC, 24VAC/DC, 120 VAC, 230 VAC

Options*

- Positioners
- Extended Duty Motors
- 0-90°-180°
- Feedback Potentiometer
- Two Additional Auxiliary Switches
- Local Control Station
- Power Supply Flexibility–3 Phase w/230 VAC, 380 VAC, or 460 VAC

***Not available on all models**

Technical Information

Actuator Specifications

	EPM2*	EPM3	EPM8	EPM13	EPM35	EPM130
Torque Output (in. lb/Nm)	135/15	300/35	800/90	1300/150	3500/400	13500/1500
Supply Voltage	12 VDC 24 VDC 120 VAC 230 VAC	12 VAC/DC 24 VAC/DC 120 VAC 230 VAC	12 VAC/DC 24 VAC/DC 120 VAC 230 VAC	12 VAC/DC 24 VAC/DC 120 VAC 230 VAC	12 VAC 24 VAC 120 VAC 230 VAC	120 VAC 230 VAC
Duty Cycle	12 V & 24 V–75% 120 V & 230 V– 25% to 50%	12 V & 24 V–75% 120 V & 230 V– 25% to 50% Proportional Control–75%	25% to 50% On/Off Control, Proportional Control 100% Managed			
Thermal Overload	Standard					
Cycle Time–Secs.@ 90°	8	12	15	22	16	46
Auxiliary Limit Switch Rating	3A @ 250 V		10A @ 250 V			
Conduit Entry (2)	1/2″ NPT		3/4″ NPT			
Enclosure	NEMA 4/4X					
Enclosure Material	Aluminum Alloy Powder Coated					
Maximum Inrush Current	5.1A @ 12 VDC 5.4A @ 24 VDC 1.5A @ 120 VAC 1.0A @ 230 VAC	3.0A @ 12 VAC/DC 0.8A @ 24 VAC/DC 1.5A @ 120 VAC 1.0A @ 230 VAC	5.0A @ 12 VAC/DC 5.0A @ 24 VAC/DC 3.0A @ 120 VAC 1.5A @ 230 VAC	5.0A @ 12 VAC/DC 5.0A @ 24 VAC/DC 3.0A @ 120 VAC 1.5A @ 230 VAC	8.5A @ 12 VAC 8.0A @ 24 VAC 3.1A @ 120 VAC 1.5A @ 230 VAC	14.0A @ 120 VAC 3.6A @ 230 VAC
Running Current	1.7A @ 12 VDC 1.8A @ 24 VDC 0.5A @ 120 VAC 0.3A @ 230 VAC	0.5A @ 12 VAC/DC 0.6A @ 24 VAC/DC 0.5A @ 120 VAC 0.3A @ 230 VAC	3.4A @ 12 VAC/DC 3.0 A @ 24 VAC/DC 1.0A @ 120 VAC 0.5A @ 230 VAC	3.4A @ 12 VAC/DC 3.0 A @ 24 VAC/DC 1.0A @ 120 VAC 0.5A @ 230 VAC	12.0A @ 12 VAC 6.0A @ 24 VAC 1.3A @ 120 VAC 0.5A @ 230 VAC	4.0A @ 120 VAC 2.0A @ 230 VAC
Weight (lb/kg)	5/2	5/2	25/11	25/11	49/22	80/36

**On/Off Only*

Ball Valve Selection Chart*

Size	True Union Ball Valve	Three-Way Ball Valve
1/2″ – 2″	EPM2 / EPM3	EPM2 / EPM3
2-1/2″ – 3″	EPM3	EPM3
4″ – 6″	EPM3	EPM8

**Actuator size selections based on clean water at 70°F*

Please Note: *All EPM, EPS, and EPL Series Reversing Electric Actuators are considerably heavier than those typically used with plastic ball and butterfly valves, and they must be supported independently of the valves on which they are mounted. The weight must not be borne by the valve or piping. Please consult the factory if you need help with your particular application.*

Butterfly Valve Selection Chart*

Size	Butterfly Valve
1-1/2″, 2″, 3″	EPM3
4″, 6″	EPM8
8″	EPM13
10″, 12″	EPM35
14″ – 24″	EPM130

**Actuator size selections based on clean water at 70°F*

EPM2

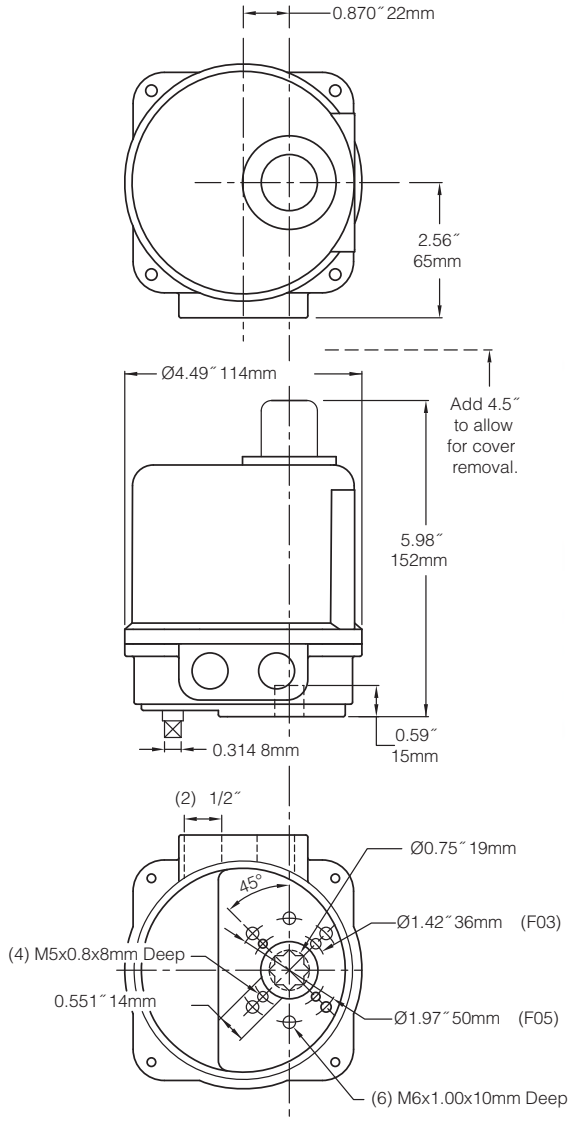

On/Off Control

12/24VDC

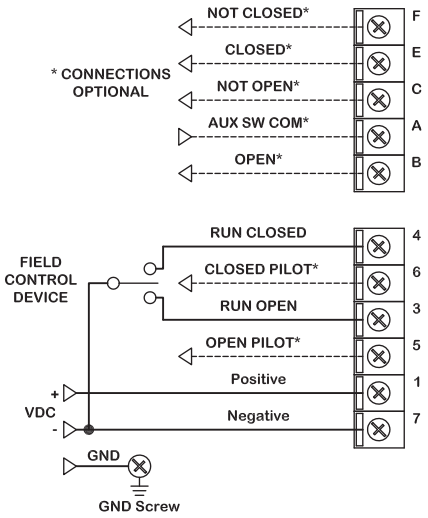

12/24VAC

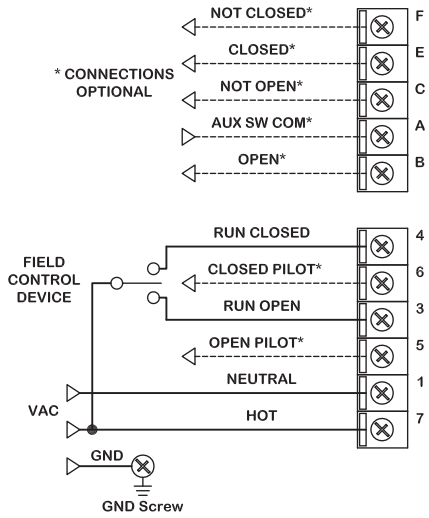

120/230VAC

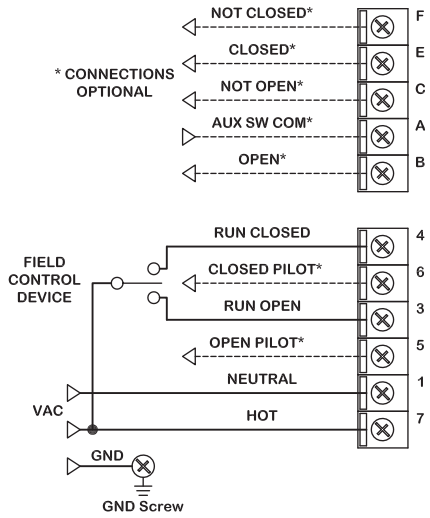

EPM3

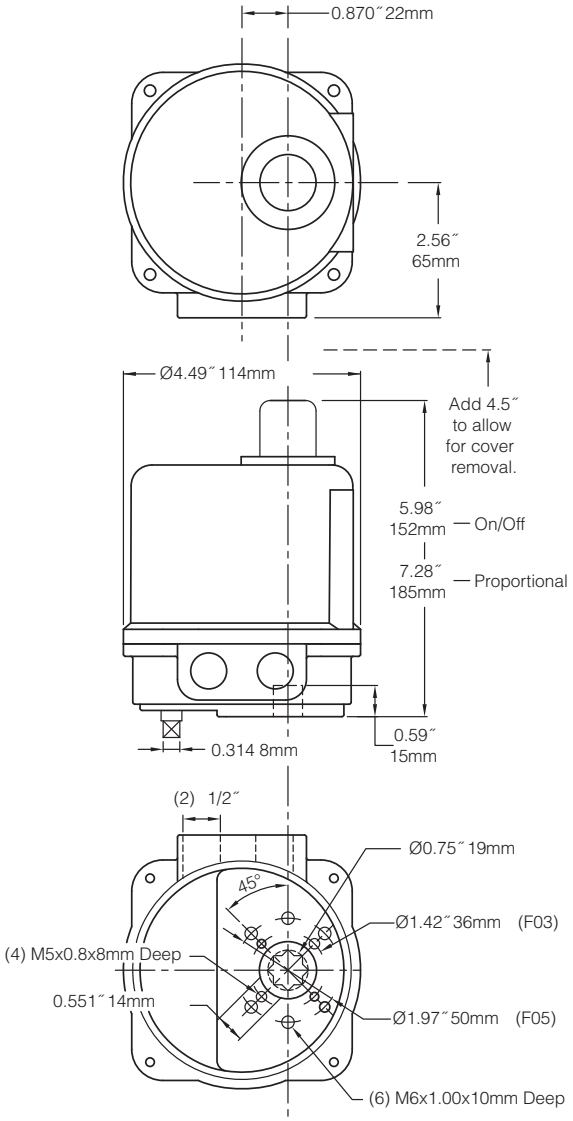

On/Off Control

12/24VDC

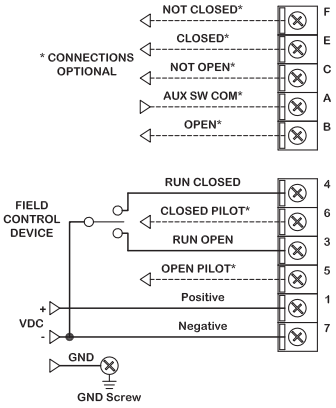

12/24VAC

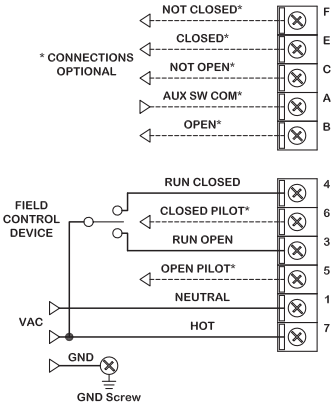

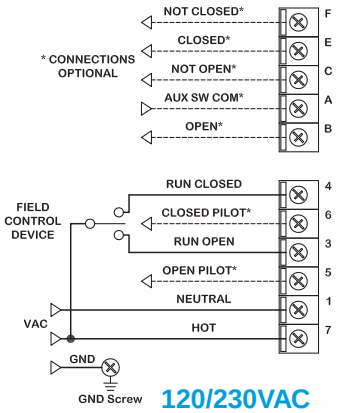

120/230VAC

Proportional Control

12/24VDC and 12/24/120/230 VAC

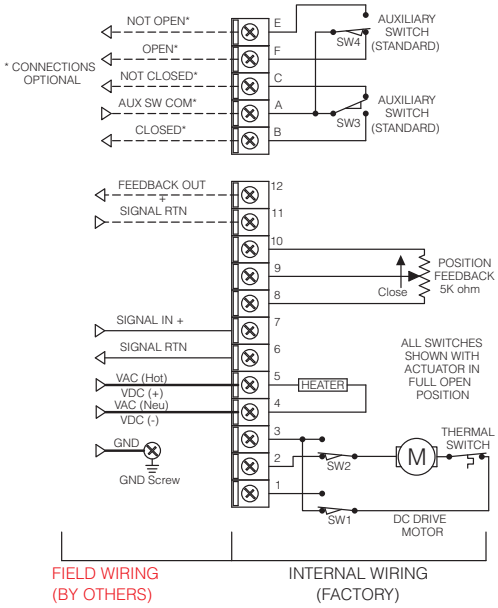

EPM8

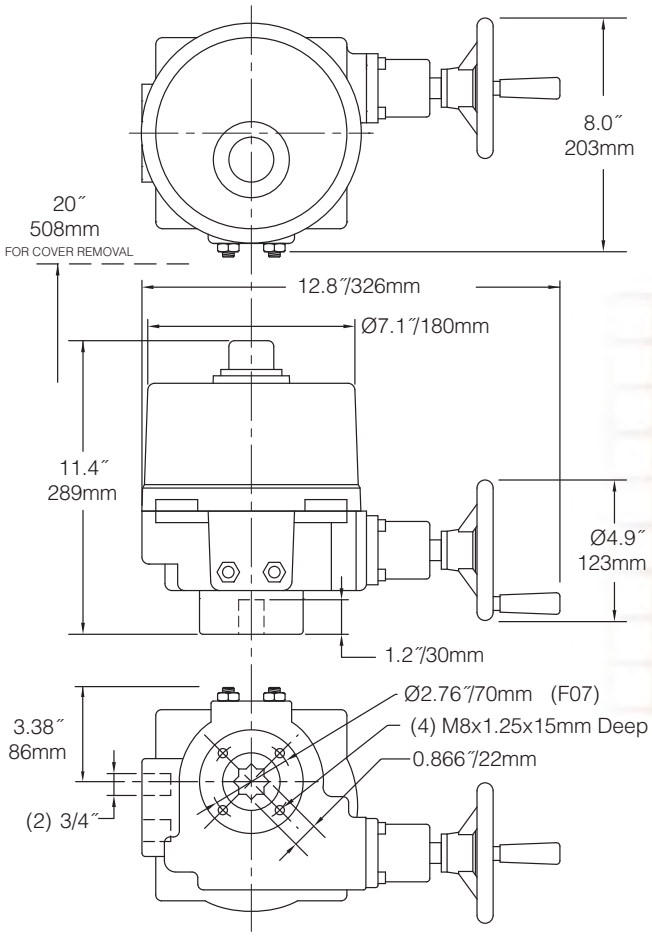

On/Off Control — Proportional Control

12/24VDC

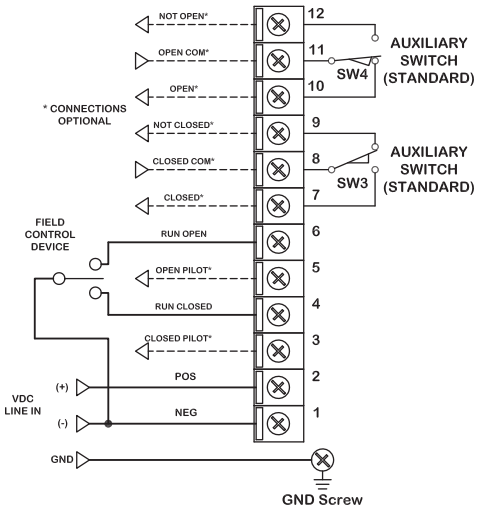

12/24/120/230VAC

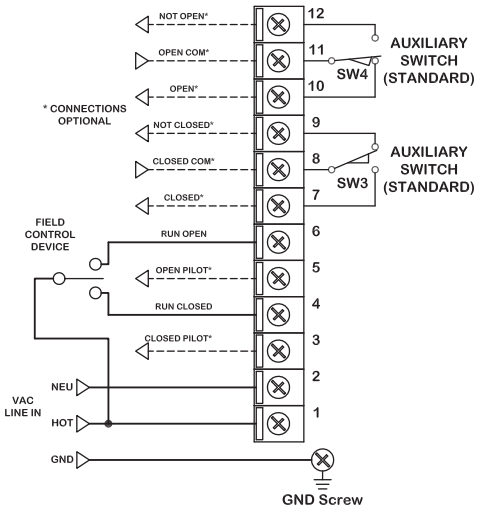

24/120/230VAC

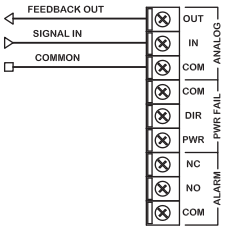

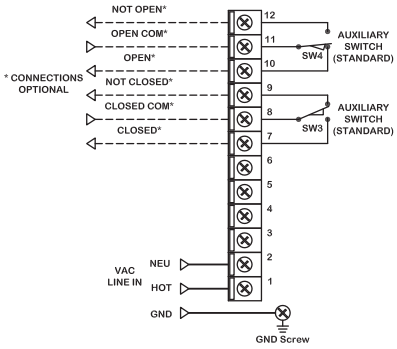

EPM13

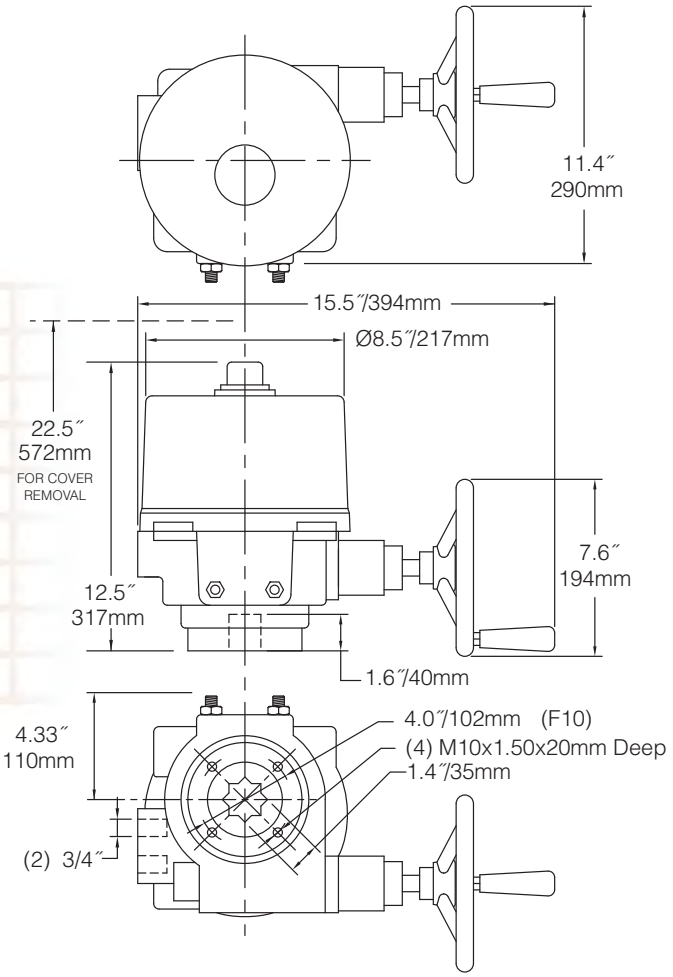

On/Off Control

12/24VDC

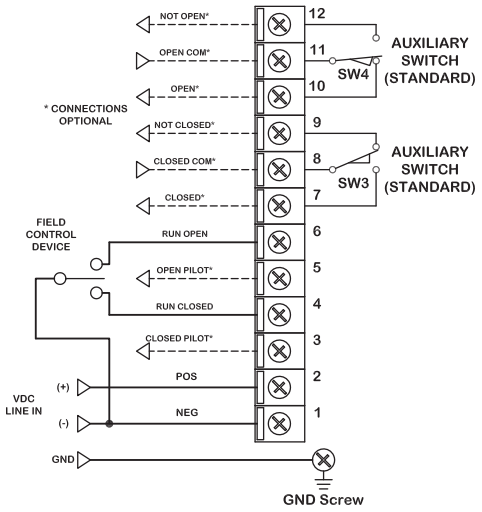

12/24/120/230VAC

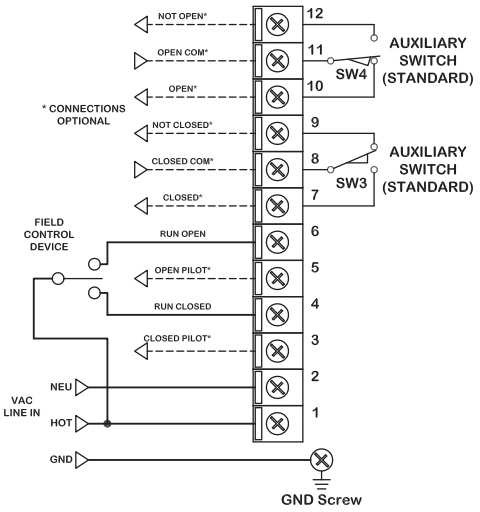

Proportional Control

24/120/230VAC

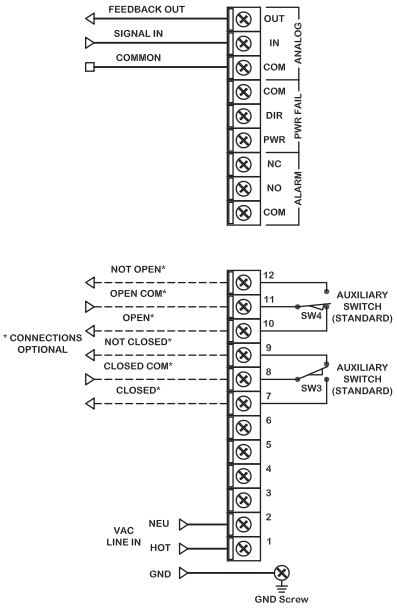

EPM35

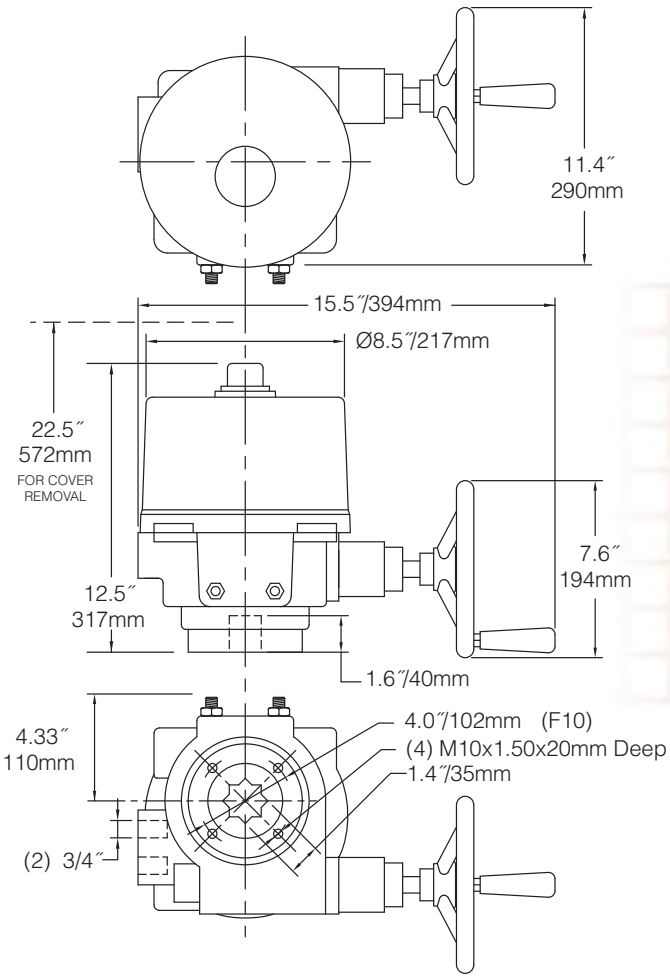

On/Off Control

12/24VDC

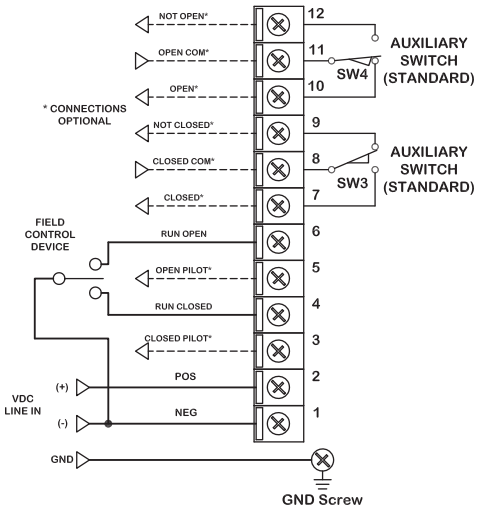

12/24/120/230VAC

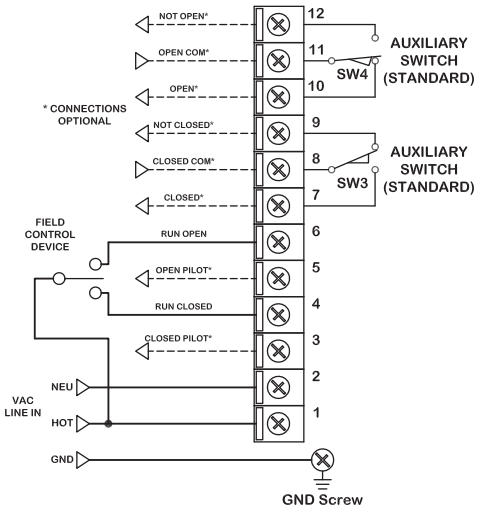

Proportional Control

24/120/230VAC

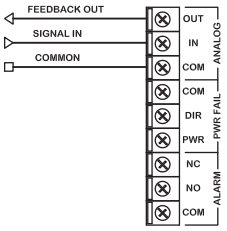

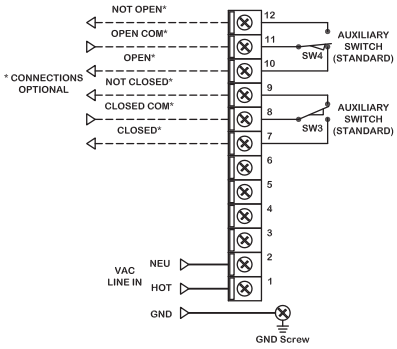

EPM130

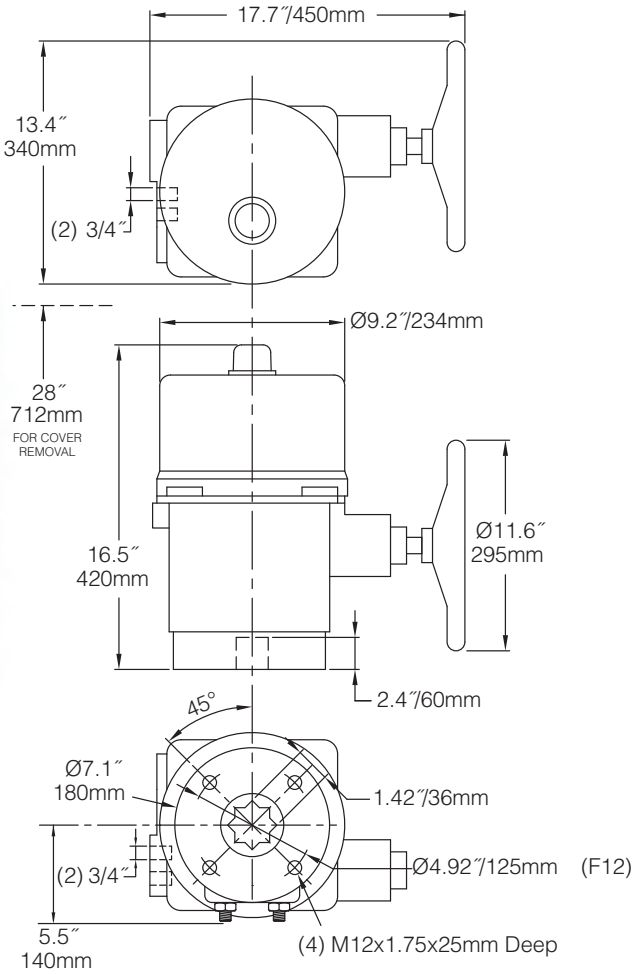

On/Off Control

120/230VAC

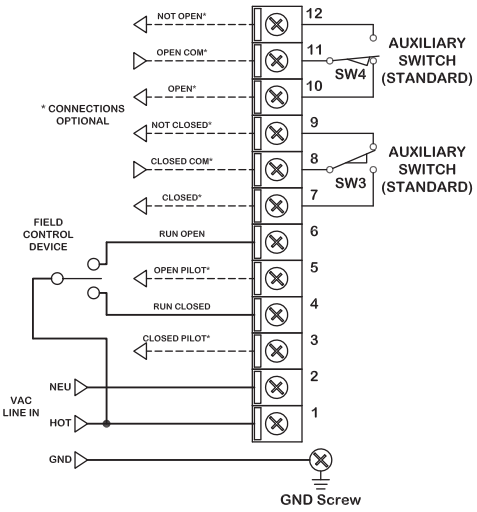

Proportional Control

120/230VAC

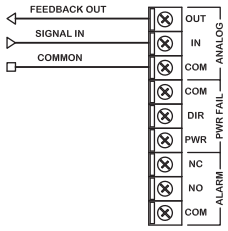

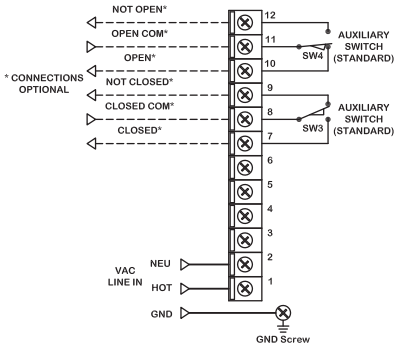

Quotation 100624-03

SMD Fluid Controls

Customer: **Parkway Electric**

Part Number
FM20-1006-PAR1

SS

1 - 4 pcs. each
$ 5-10 pcs.

Lead Length
240

LEVEL
(Inches)
(Wire Color)

# of Levels
2

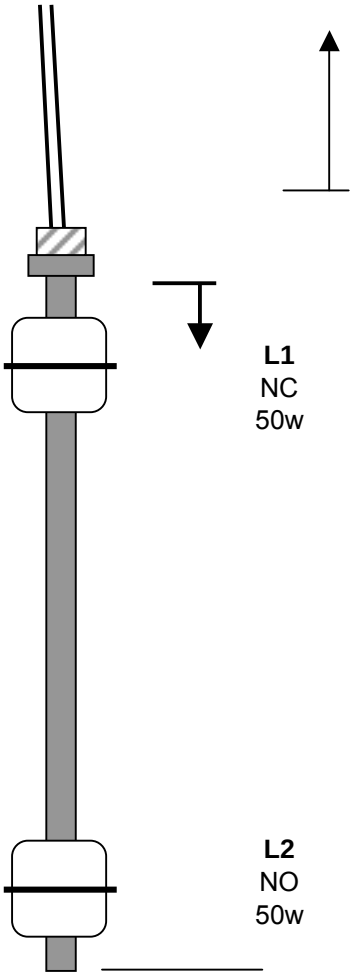

L1 2.00
NC Red/Blk
50w

Special Requirements

Fitting 1/2" NPT

L2 53.00
NO Wht/Grn
50w

Delivery: 2 Weeks FOB Source
Ship Via: UPS Ground
Terms: Credit Card, COD or Net 30

Total Length 55.00

SMD Fluid Controls
55 Barnes Park North
Wallingford, CT 06492
Telephone: (203)-294-5800
24 hr. Fax: (203)-265-0544
Website: www.fluidswitch.com
E-mail: solutions@fluidswitch.com

APOLLO AE-SERIES ELECTRIC ACTUATORS

General Installation, Operation, Specifications, Maintenance and Trouble Shooting Instructions

The following is intended as a guide only in installing and operating the electric actuator. The manufacturer assumes no liability whatsoever for any personal injury or other special or consequential damages that may occur. There are no warranties as to suitability for a specific application or purpose.

Installation / Mechanical Operation

- Verify that the valve breakaway torque is less than the rated output torque of the actuator.
- Any mechanical stops that would interfere with the operation of the actuator must be removed before installation of the actuator, i.e. lever, travel stops, etc.
- The actuator output coupling must be centered with the valve stem to prevent side loading, which causes premature stem packing wear.
- The AE-Series actuator is not recommended for actuation of butterfly valves or other similar resilient seated valves, unless installed with Motor Break option.
- To use the manual override feature (identified on cover label), the override shaft must be pressed down firmly at least 1/4" in order to disengage the motor from the gears. The manual override is not designed to overcome torque in excess of the rated torque of the actuator. Serious damage to the gear system may result from excessive turning force on the manual override.
- The AE-Series actuator may be mounted in any position, i.e. horizontal, upside down. If the conduit entrance points upward, conduit piping must be oriented as to prevent condensation from entering the actuator from the conduit pipe.

Electrical Operation

- Always verify that the supply voltage and required voltage are the same.
- AE-series 24VAC, 115VAC and 230VAC actuators use capacitor run-reverse induction motors, which create higher feedback voltages that the supply voltage. Control devices connected to terminals 3 and 4 must be rated for 250VAC minimum for 15VAC actuators, (440VAC min. for 230VAC actuators: 125VAC min. for 24VAC).
- Do not wire actuators in series or parallel with another actuator or other electrical equipment due to the induction feedback voltage created by the motor.
- Separate (isolated contacts) are required for each actuator.
- When wiring DC voltage actuators, verify that terminal polarity is correct (pos.+ & Neg.-). Failure to do so will cause the actuator to operate out of its normal 90 degree rotation.
- The AE-Series actuators are designed to operate at 25% duty cycle at temperatures below 100°F. This means that for a cycle time of 25 seconds the actuator must rest for 75 seconds. This is an average. For example: The actuator may cycle several times in a row, but must rest for a period 75% longer that the time it operated.
- All models require electrical power to both OPEN and to CLOSE the actuator and valve.

Maintenance

Under normal circumstances the actuator will not require additional lubrication. All of the actuator's essential components are permanently lubricated at the factory.

- Seal conduit entrances to prevent water or dirt from entering the housing. Excessive moisture can cause premature wear or corrosion within the housing.
- Periodically inspect actuator and valve assembly for worn parts, loose fasteners, or damage to the outside of the unit.

General Specifications

Actuator Model	Breakaway Torque Output (in.-lbs.)	Cycle Time 90° Travel (50% Load)	Duty Cycle*	Amperage Draw (max.) Starting or locked rotor current voltage				
				24 VAC	115VAC	230VAC	12VDC	24VDC
AE200	200 in-lbs.	5.0 sec.	25%	4.56 amp	.74 amp	.44 amp	2.00 amp	1.38 amp
AE400	400 in-lbs.	10.0 sec.	25%	4.56 amp	.74 amp	.44 amp	2.00 amp	1.38 amp
AE600	600 in-lbs.	15.0 sec.	25%	4.56 amp	.74 amp	.44 amp	2.00 amp	1.38 amp
AE800	800 in-lbs.	20.0 sec.	25%	4.56 amp	.74 amp	.44 amp	2.00 amp	1.38 amp
AE1000	1000 in-lbs.	25.0 sec.	25%	4.56 amp	.74 amp	.44 amp	2.00 amp	1.38 amp

Note: 90° Travel = Travel From Closed position to Open position or vice versa.
* Duty Cycle for 24VAC will be approximately 20%.

Motor	AC models: 24 VAC, 120 VAC or 230 VAC, Reversible. 3 wire, capacitor run. Self-resetting thermal overload protection, Class B insulation, sub-fractional horsepower. DC models: 12 VDC or 24 VDC, Reversible. 2 wire, POS. & NEG. No thermal overload (external circuit breaker or fuse suggested for protection).
Lubrication	Permanently lubricated gear train and bearings.
Duty Cycle	The AE-Series actuators are designed to operate at 25% duty cycle at temperatures below 100°F. See Electrical Operation.
Temperature Operating Range	32°F to 150°F standard -40°F to 150°F with optional heater & thermostat
Thermal Protection	Self-resetting (AC Motors Only)
Conduit Connections	(2) 1/2”-NPT female
Direction Of Travel	Clockwise to Close, Counterclockwise to Open (Position indicator shaft only, manual override shaft rotates opposite)

AE-SERIES NUMBERING SYSTEM

Constant	Torque	Voltage	Options
	200	1 = 115 vac	0 = Standard
	400	2 = 24 vac	A = One extra switch & cams
	600	3 = 220 vac	B = Two extra switches & cams
	800	4 = 12 vac	C = Three extra switches & cams
	1000	5 = 24 vac	D = Heater & Thermostat
			E = Single Potentiometer
	Enter all digits of Torque value		F = Motor Break

Note: AE will always be the first two characters of the part number, all digits from torque value must be entered into part number (i.e. 400, 1000 etc.). Only use one digit for voltage depiction (i.e. 1-5). For the options listing you may use more than one character, up to three (i.e. 0, AD or BD etc.).

24/115/230 VAC Wiring Diagram

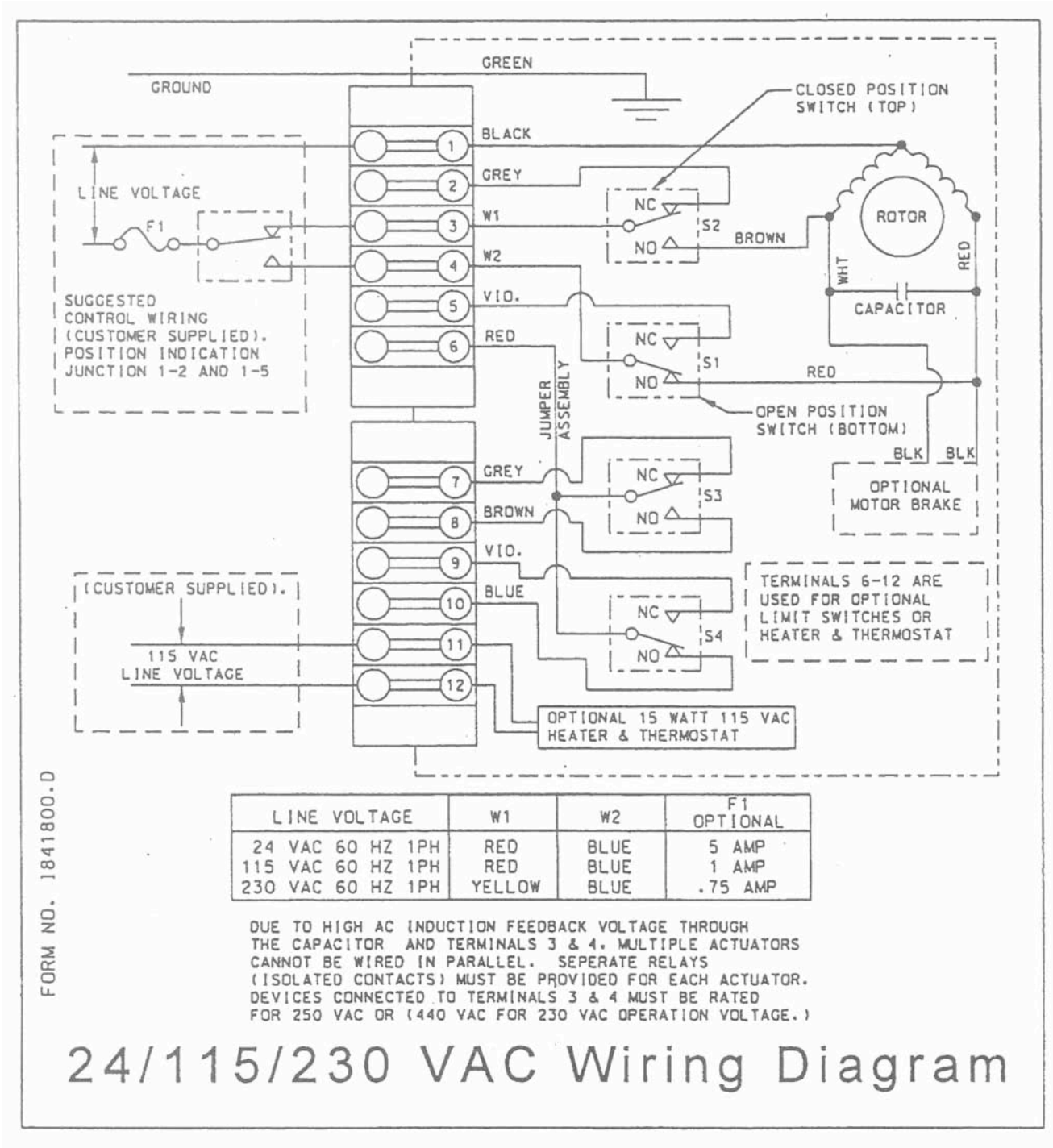

LINE VOLTAGE	W1	W2	F1 OPTIONAL
24 VAC 60 HZ 1PH	RED	BLUE	5 AMP
115 VAC 60 HZ 1PH	RED	BLUE	1 AMP
230 VAC 60 HZ 1PH	YELLOW	BLUE	.75 AMP

DUE TO HIGH AC INDUCTION FEEDBACK VOLTAGE THROUGH THE CAPACITOR AND TERMINALS 3 & 4. MULTIPLE ACTUATORS CANNOT BE WIRED IN PARALLEL. SEPERATE RELAYS (ISOLATED CONTACTS) MUST BE PROVIDED FOR EACH ACTUATOR. DEVICES CONNECTED TO TERMINALS 3 & 4 MUST BE RATED FOR 250 VAC OR (440 VAC FOR 230 VAC OPERATION VOLTAGE.)

SUGGESTED CONTROL WIRING (CUSTOMER SUPPLIED). POSITIION INDICATOR JUNCTION 1-2 AND 1-5.

(CUSTOMER SUPPLIED).
115 VAC LINE VOLTAGE

CLOSED POSITION SWITCH (TOP)

OPEN POSITION SWITCH (BOTTOM)

OPTIONAL MOTOR RREAK

TERMINALS 6-12 ARE USED FOR OPTIONAL LIMIT SWITCHES OR HEATER & THERMOSTAT

OPTIONAL 15 WATT 115 VAC HEATER & THERMOSTAT

LINE VOLTAGE	W1	W2	F1 OPTIONAL
24 VAC 60 HZ 1 PH	RED	BLUE	5 AMP
115 VAC 60 HZ 1 PH	RED	BLUE	1 AMP
230 VAC 60 HZ 1 PH	YELLOW	BLUE	.75 AMP

DUE TO HIGH AC INDUCTION FEEDBACK VOLTAGE THROUGH THE CAPACITOR AND TERMINALS 3 & 4, MULTIPLE ACTUATORS CANNOT BE WIRED IN PARALLEL. SEPARATE RELAYS (ISOLATED CONTACTS) MUST BE PROVIDED FOR EACH ACTUATOR. DEVICES CONNECTED TO TERMINALS 3 & 4 MUST BE RATED FOR 250 VAC OR (440 VAC FOR 230 VAC OPERATION VOLTAGE).

12/24 VDC WIRING DIAGRAM

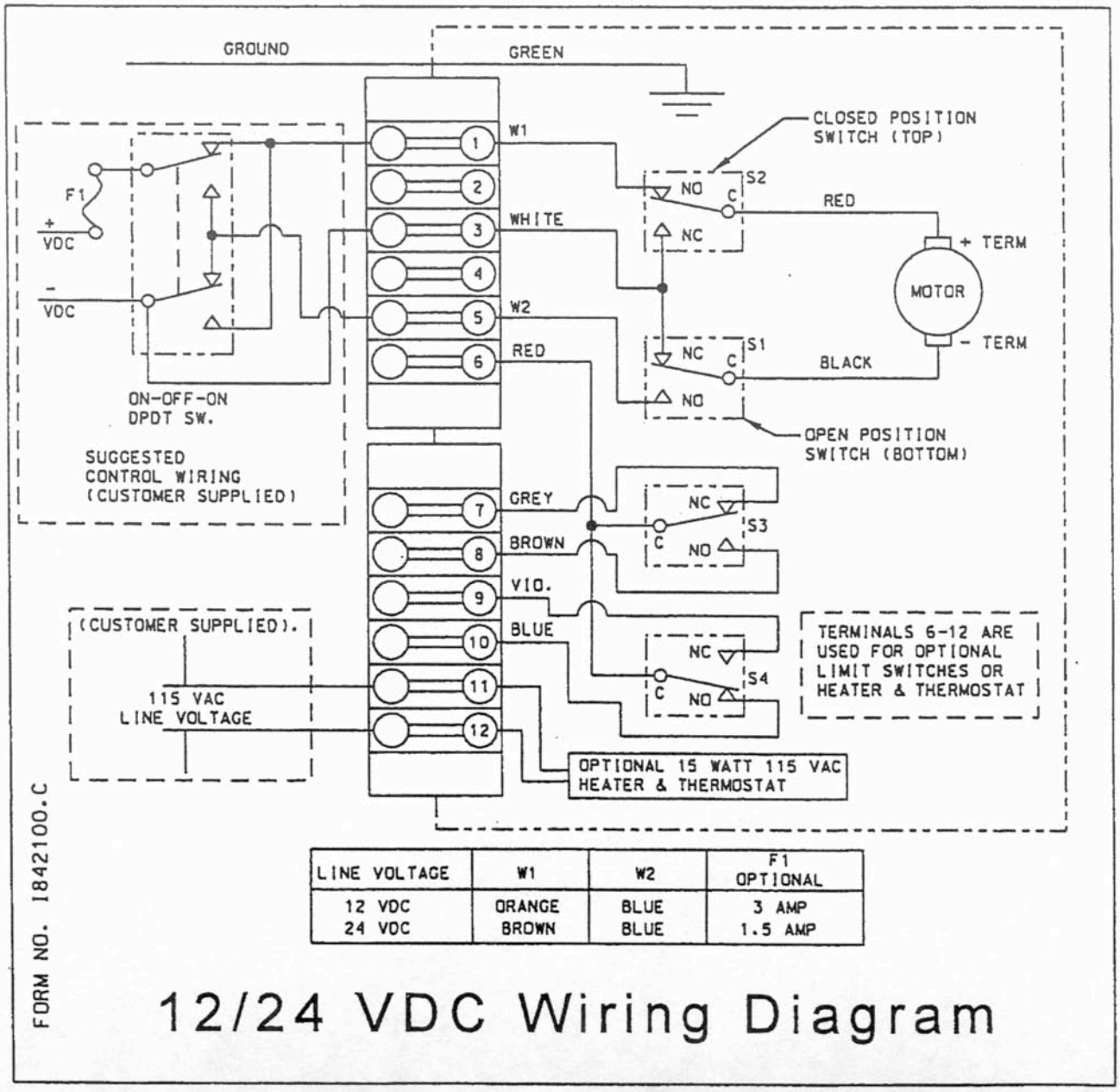

LINE VOLTAGE	W1	W2	F1 OPTIONAL
12 VDC 24 VDC	ORANGE BROWN	BLUE BLUE	3 AMP 1.5 AMP

ON-OF-ON DPDT SW.

SUGGESTED CONTROL WIRING (CUSTOMER SUPPLIED)

(CUSTOMER SUPPLIED).
115 VAC LINE VOLTAGE

CLOSED POSITION SWITCH (TOP)

RED +TERM
MOTOR – TERM BLACK

OPEN POSITION SWITCH (BOTTOM)

TERMINALS 6-12 ARE USED FOR OPTIONAL LIMIT SWITCHES OR HEATER & THERMOSTAT

OPTIONAL 15 WATT 115 VAC HEATER & THERMOSTAT

LINE VOLTAGE	W1	W2	F1 OPTIONAL
12 VDC	ORANGE	BLUE	3 AMP
24 VDC	BROWN	BLUE	1.5 AMP

MANUAL OVERRIDE SHAFT .312 SQUARE

CPTIVE SCREWS ARE 1/4” – 20 UNC SOCKET HEAD CAP SCREWS, 6 PLACES

INDICATOR – SHOWN IN CLOSED POSITION

1/2” NPT, TYPICAL BOTH SIDES

3.5” CLEARANCE (FROM TOP OF OVERRIDE SHAFT) REQUIRED FOR COVER REMOVAL

5/16-18 UNC X .62 DEEP
4 PLACES TYPICAL

02.756 B.C.

.748 SQUARE
.747 X .87 DEEP

.975

1.949 SQUARE

MOUNTING PATTERN ISO 5211 – F07

AE-SERIES DIMENSIONS

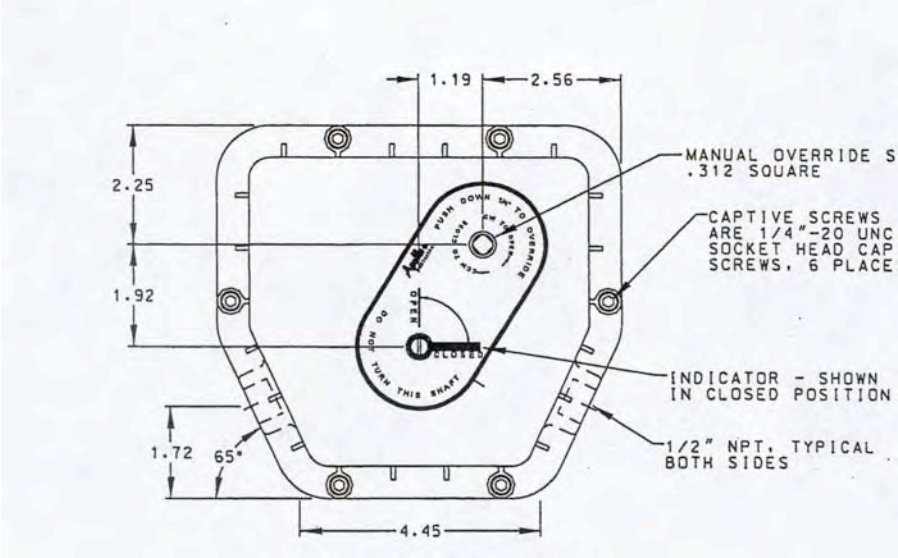

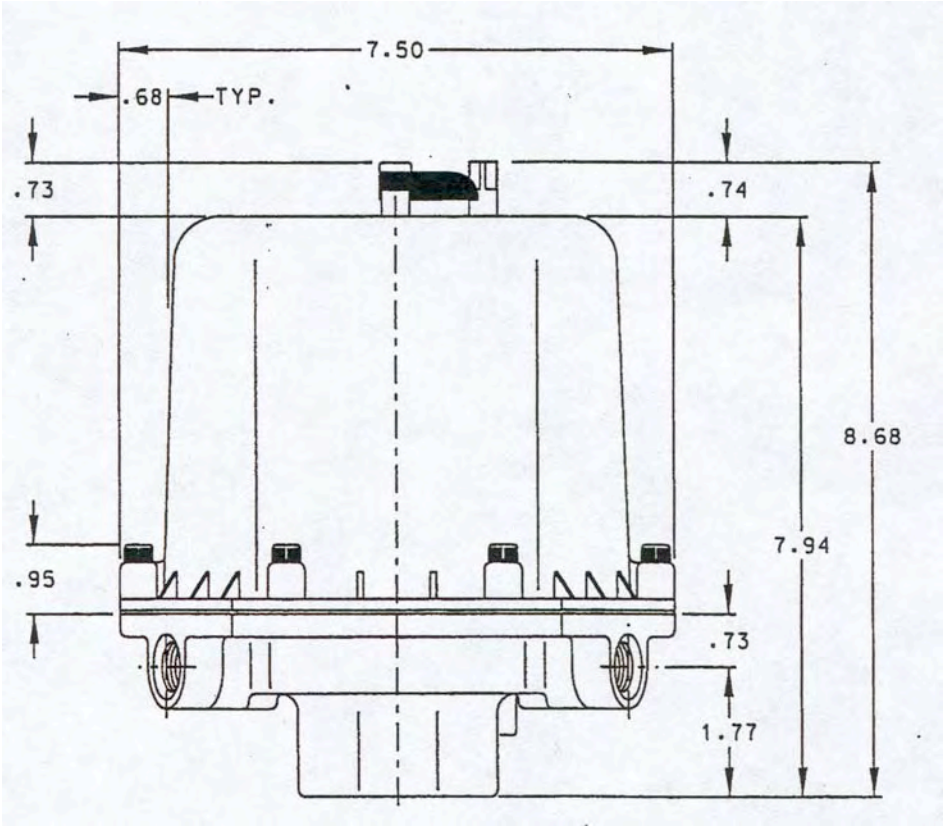

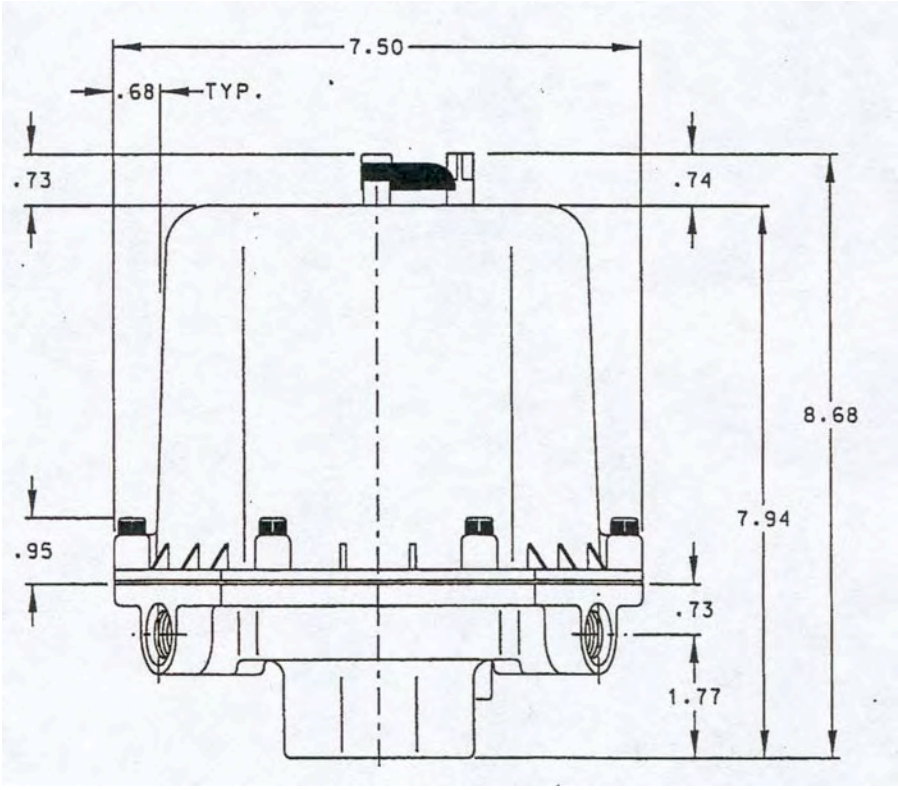

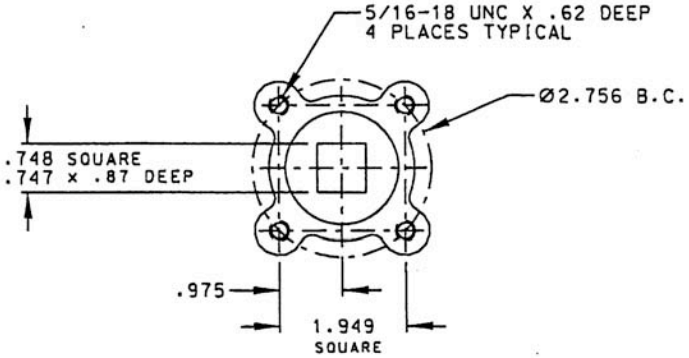

MOUNTING PATTERN ISO 5211 - F07

APPENDIX D: HMI Operating Screens

OVERVIEW | EXTRACTION WELLS | INJECTION SCREEN | DEEP WELL #3 | DEEP WELL #4 | DEEP WELL #5 | USER LOGIN | USER LOGOUT

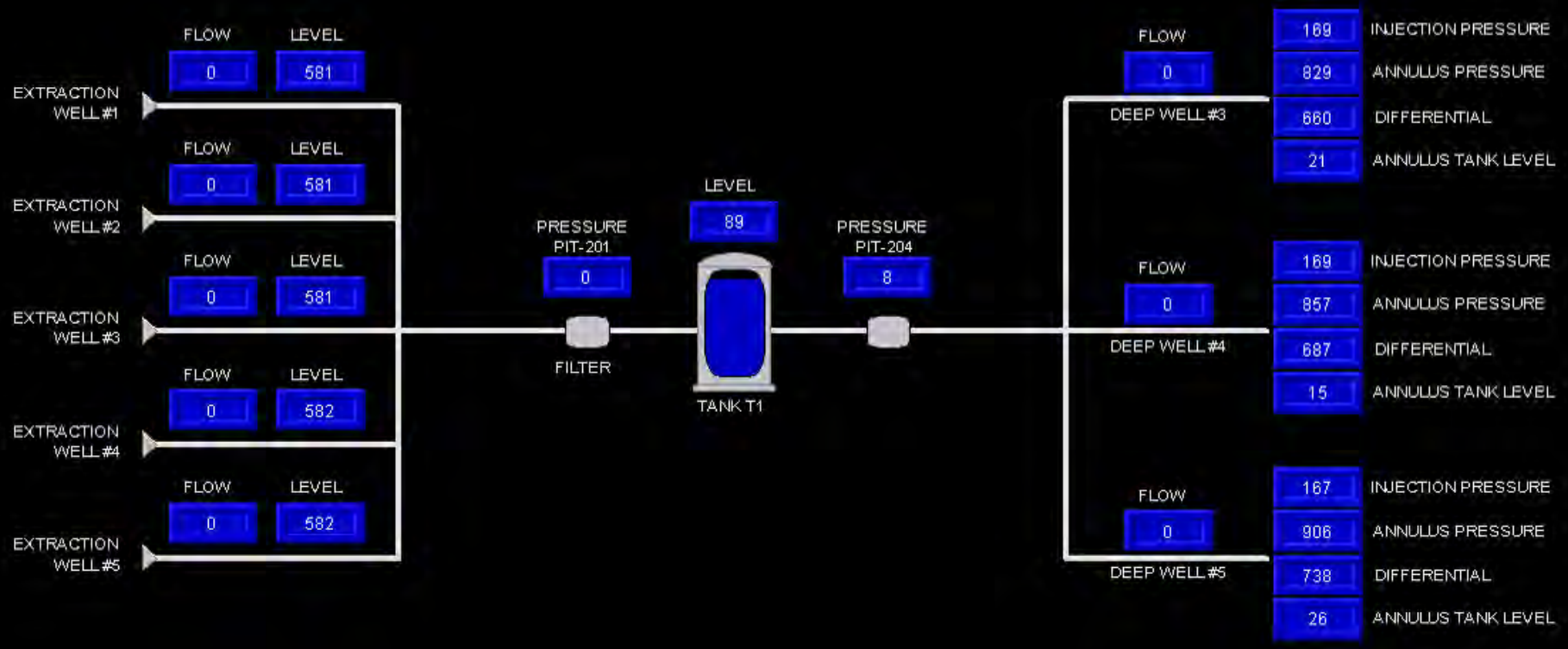

11/15/2010 2:04:33 PM	PT2628_Lo TRIP	Deep Well #8 Annulus Pressure Lo
11/13/2010 2:41:44 PM	LT105_Hi TRIP	Extraction Well #5 Hi Level
11/12/2010 6:01:18 AM	PIT204_Lolo TRIP	Injection Pressure Lo Lo

0 | 11 | 0 | 0

Display Overview2 | Clear | Clear All

Pfizer Holland Groundwater Extraction & Treatment

EXTRACTION WELLS | INJECTION SCREEN | DEEP WELL #3 | DEEP WELL #4 | DEEP WELL #5 | USER LOGIN | USER LOGOUT

TO INJECTION PUMP

	EWP-1	EWP-2	EWP-3	EWP-4	EWP-5
Flow Setpoint	20	20	10	20	12
FCV	FCV-101	FCV-102	FCV-103	FCV-104	FCV-105
GPM	0.00	0.00	2.7E-3	5.3E-3	4.0E-3
%	10.00	0.00	0.00	0.00	0.00
FIT	FIT-101	FIT-102	FIT-103	FIT-104	FIT-105
GAL	0.00	0.00	0.00	0.00	0.00
GPM	0.00	0.00	0.00	0.01	0.00
LT	LT-101	LT-102	LT-103	LT-104	LT-105
FT	581.01	581.45	581.81	582.15	581.99
Pump	Stopped	Stopped	Stopped	Stopped	Stopped
	DISABLED	DISABLED	DISABLED	DISABLED	DISABLED
	ENABLE / DISABLE	ENABLE / DISABLE	ENABLE / DISABLE	ENABLE / DISABLE	ENABLE / DISABLE
	AUTO / MANUAL	AUTO / MANUAL	AUTO / MANUAL	AUTO / MANUAL	AUTO / MANUAL

FQI: Stopped / No Flow

Time	Tag	Description
11/6/2010 6:52:55 PM	PIT204_LoLo TRIP	Injection Pressure Lo Lo
11/6/2010 6:52:55 PM	PIT204_Lo TRIP	Injection Pressure Lo
11/6/2010 6:52:55 PM	LT104_Hi TRIP	Extraction Well #4 Hi Level

0 | 6 | 0 | 0

Display Extraction_Wells

Clear | Clear All

Start | WIN911 Alarm Monitor ... | Pfizer Holland Ground... | RSLogix 5000 - PLC100 i... | 2:32 PM

Pfizer Holland Groundwater Extraction & Treatment

EXTRACTION WELLS | INJECTION SCREEN | DEEP WELL #3 | DEEP WELL #4 | DEEP WELL #5 | USER LOGIN | USER LOGOUT

LSHH-202 Normal
LS HH
LS LL
LSLL-202 Normal

AIT-205 6.89 pH
AE

PIT-201 2.57 PSI
PIT

LT-202 75.50 %
LT

PUMP TANK T1

FROM EXTRACTION WELLS 1-5

12 Flow Setpoint
P1 Setpoint
0.00 0 GPM
0.00 %

PI

Stopped

PIT-204 LL 6.99 PSI
PIT

P-1 0.00 0 Hz
DISABLED
ENABLE
DISABLE
AUTO
MANUAL

TO DEEP WELL 3
TO DEEP WELLS 4
TO DEEP WELLS 5

PI

LSH-901 Normal
LSH

11/6/2010 6:52:55 PM	PIT204_LoLo TRIP	Injection Pressure Lo Lo
11/6/2010 6:52:55 PM	PIT204_Lo TRIP	Injection Pressure Lo
11/6/2010 6:52:55 PM	LT104_Hi TRIP	Extraction Well #4 Hi Level

0 | 6 | 0 | 0

Connection ID: 5 ; Process name: PIBaGen.exe ; User: ; OS User: ; IP: ; AppID: 33 ; AppName: PIBaGen ; Flag: 1 (connecting) ;

Clear | Clear All

Start | Calculator | WIN911 Alarm Monitor ... | Pfizer Holland Ground... | RSLogix 5000 - PLC100 i... | 11:31 AM

Pfizer Holland Groundwater Extraction & Treatment

EXTRACTION WELLS | INJECTION SCREEN | DEEP WELL #3 | DEEP WELL #4 | DEEP WELL #5 | USER LOGIN | USER LOGOUT

DEEP WELL #4

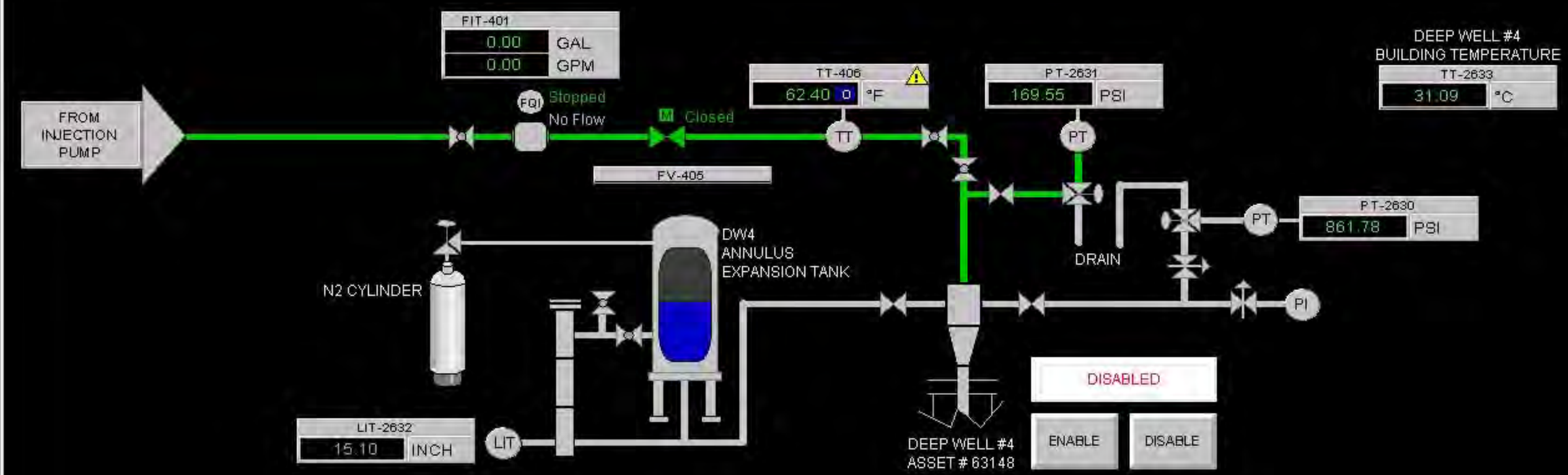

Characteristic	Limitation	Alarm Level	Shut Down Level	Current Reading
Injection Pressure	1049 psig	630	680	169
Annulus Pressure	100 psig min	1050 / 830	1150 / 800	861
Annulus Pressure Differential	100 psig min above injection pressure	200	150	692
Injection Rate	100 gpm max			0.00

11/6/2010 6:52:55 PM PIT204_LoLo TRIP Injection Pressure Lo Lo
11/6/2010 6:52:55 PM PIT204_Lo TRIP Injection Pressure Lo
11/6/2010 6:52:55 PM LT104_Hi TRIP Extraction Well #4 Hi Level

0 6 0 0

Display Deep_Well_4 Clear Clear All

Start | WIN911 Alarm Monitor ... | Pfizer Holland Ground... | RSLogix 5000 - PLC100 i... | untitled - Paint | 2:37 PM

Pfizer Holland Groundwater Extraction & Treatment

EXTRACTION WELLS | INJECTION SCREEN | DEEP WELL #3 | DEEP WELL #4 | DEEP WELL #5 | USER LOGIN | USER LOGOUT

DEEP WELL #5

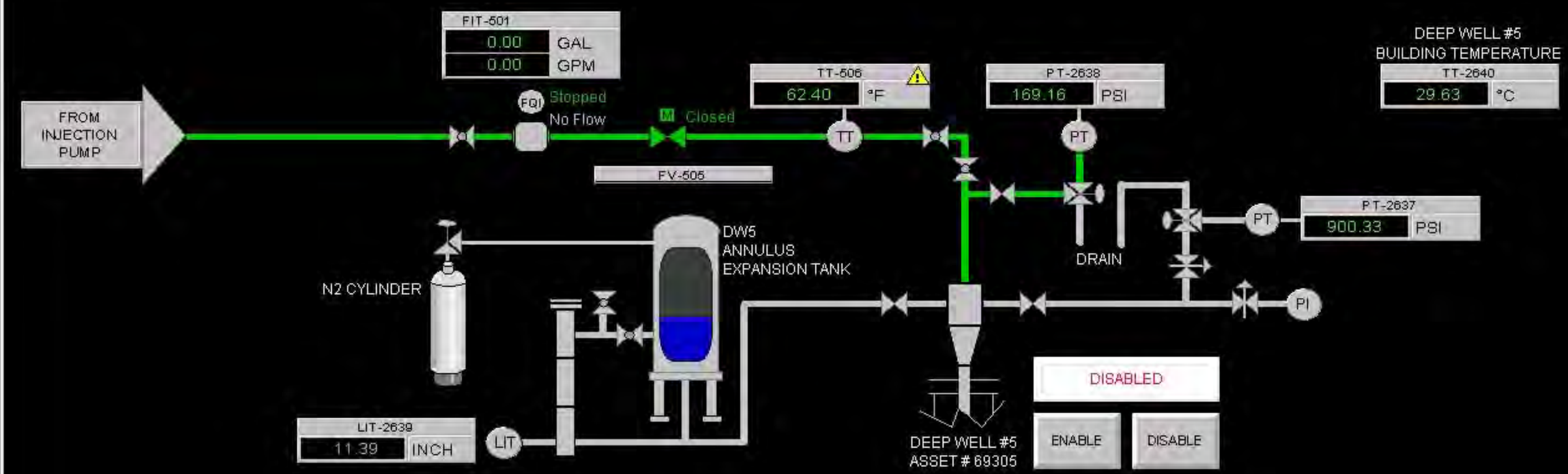

Characteristic	Limitation	Alarm Level	Shut Down Level	Current Reading
Injection Pressure	1049 psig	630	680	169
Annulus Pressure	100 psig min	1050 / 830	1150 / 800	900
Annulus Pressure Differential	100 psig min above injection pressure	200	150	731
Injection Rate	100 gpm max			0.00

11/6/2010 6:52:55 PM PIT204_LoLo TRIP Injection Pressure Lo Lo
11/6/2010 6:52:55 PM PIT204_Lo TRIP Injection Pressure Lo
11/6/2010 6:52:55 PM LT104_Hi TRIP Extraction Well #4 Hi Level

0 6 0 0

Display Deep_Well_5 Clear Clear All

Start | WIN911 Alarm Monitor ... | Pfizer Holland Ground... | RSLogix 5000 - PLC100 i... | Deep Well #3.bmp - Paint | 2:38 PM

OVERVIEW | EXTRACTION WELLS | INJECTION SCREEN | DEEP WELL #3 | DEEP WELL #4 | DEEP WELL #5 | USER LOGIN | USER LOGOUT

(No Filter)

!	Event Time	Alarm Name	Condition N...	Message
	11/12/2010 8:01:15 AM	LT103_Hi	TRIP	Extraction Well #3 Hi Level
	11/12/2010 8:01:16 AM	LT202_Hi	TRIP	Injection Tank T1 Level Hi
	11/12/2010 8:01:17 AM	LIT2639_Hi	TRIP	Deep Well #5 Annulus Tank Level Hi
	11/12/2010 8:01:18 AM	LSHH202_Hi	TRIP	Tank T1 Hi Level
	11/12/2010 8:01:18 AM	LT101_Hi	TRIP	Extraction Well #1 Hi Level
	11/12/2010 8:01:18 AM	LT102_Hi	TRIP	Extraction Well #2 Hi Level
	11/12/2010 8:01:18 AM	LT104_Hi	TRIP	Extraction Well #4 Hi Level
	11/12/2010 8:01:18 AM	PIT204_Lo	TRIP	Injection Pressure Lo
	11/12/2010 8:01:18 AM	PIT204_LoLo	TRIP	Injection Pressure Lo Lo
	11/13/2010 2:41:44 PM	LT105_Hi	TRIP	Extraction Well #5 Hi Level
	11/15/2010 2:04:33 PM	PT2623_Lo	TRIP	Deep Well #3 Annulus Pressure Lo

No message selected.

11 | 0 | 11 | 0 | 0 | Filter: Not Filtered | Sorted by: Event Time (Ascending)

11/15/2010 2:04:33 PM	PT2623_Lo TRIP	Deep Well #3 Annulus Pressure Lo
11/13/2010 2:41:44 PM	LT105_Hi TRIP	Extraction Well #5 Hi Level
11/12/2010 8:01:18 AM	PIT204_LoLo TRIP	Injection Pressure Lo Lo

0 | 11 | 0 | 0

Display "Alarm and Event Summary" /CC

Clear | Clear All

Extraction Well #1 Pump

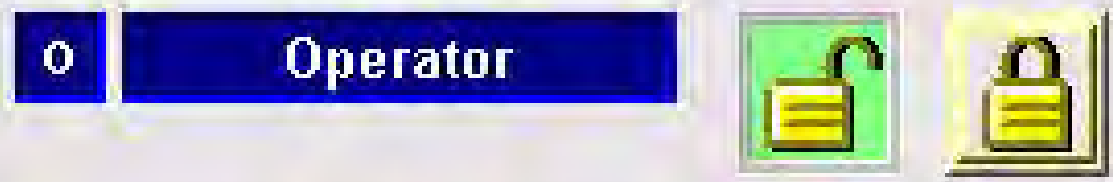

Enabled

Stopped

Comm OK

P_Motor

Extraction Well #1 Pump

O Operator

Enabled

Stopped

P

I

Comm OK

P_Motor

Interlocks for Extraction Well #1 Pump

I Enabled

- Control Power
- Motor Overload
- Tank T1 LSHH-202
- LSH-901 Hi Level Sw.
- Disabled While Run
- Filter Pressure HiHi
- Tank T1 LT-202 Hi

Extraction Well #1 Pump

O Operator

Enabled

Stopped

Comm OK

P_Motor

Interlocks for Extraction Well #1 Pump

Enabled

- ✗ Control Power
- ✓ Motor Overload
- ✓ Tank T1 LSHH-202
- ✓ LSH-901 Hi Level Sw.
- ✓ Disabled While Run
- ✓ Filter Pressure HiHi
- ✓ Tank T1 LT-202 Hi

Extraction Well #1 Pump

O Operator

Enabled

Stopped

P

I

Comm OK

P_Motor

Permissives for Extraction Well #1 Pump

P Enabled

- Lo Level Timer
- Alarm Fail To Start
- Alarm Fail To Stop
- Alarm Interlock
- Enabled

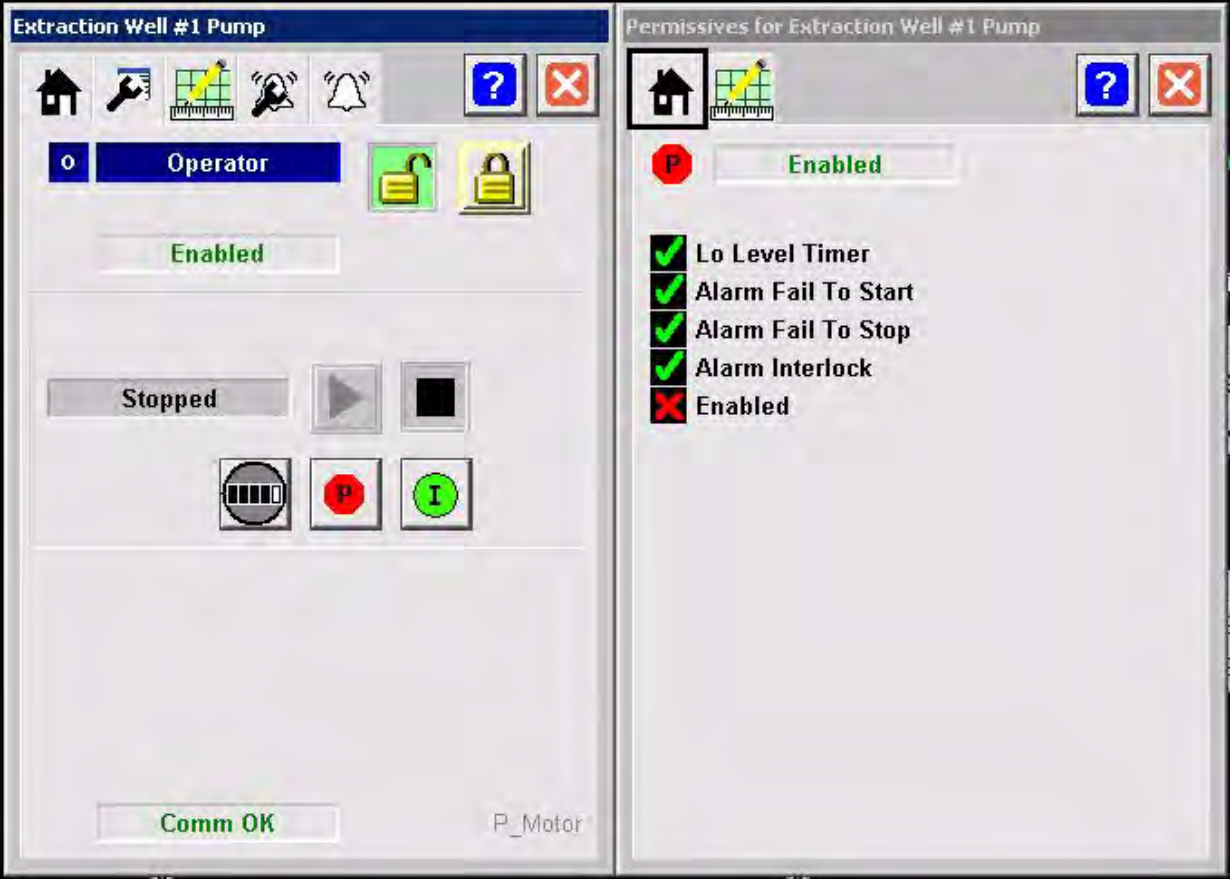
Extraction Well #1 Pump
O
Operator
Enabled
Stopped
P
I
Comm OK
P_Motor
Permissives for Extraction Well #1 Pump
P
Enabled
Lo Level Timer
Alarm Fail To Start
Alarm Fail To Stop
Alarm Interlock
Enabled

Extraction Well #1 Pump

Program

H M ! P Q

Enabled

Interlocks and Permissives

Enabled

In Override Mode, bypass Interlocks and Permissives that can be bypassed

Time after Start to get Run Feedback before Fault (sec)	10
Time after Stop to drop Run Feedback before Fault (sec)	10

Use Run Feedback

Extraction Well #1 Pump

Extraction Well #1 Pump

Label: EWP-1

Tag: P_Motor

✔ Motor Provides a Run Feedback Signal

Clear Program Commands on receipt

✔ A P_Perm object is connected to Inp_Perm

✔ A P_Intlk object is connected to Inp_Intlk

A P_ResInh object is connected

✔ A P_RunTime object is connected

Delay to echo back Running/Stopped status in Simulation (sec) 2

Extraction Well #1 Pump

Alarm	Ack Reqd	Reset Reqd	Severity 1	2	3	4
✔ Fail To Start	✔	✔				●
✔ Fail To Stop	✔	✔				●
I/O Fault						
✔ Interlock Trip	✔	✔		●		

Extraction Well #1 Pump

Fail_To_Start_Alarm

Fail_To_Stop_Alarm

Interlock_Trip_Alarm

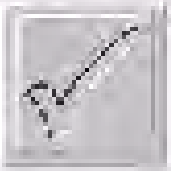

Extraction Well #1 Level

Program

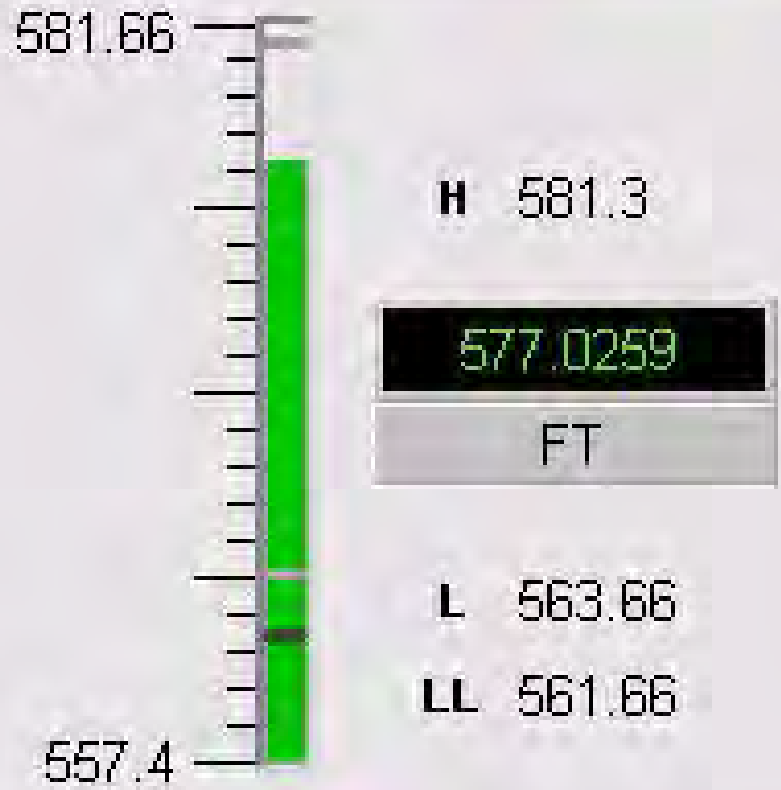

Comm OK

P_Ain

Extraction Well #1 Level

Program

M P O

	Threshold	Deadband
High-High Alarm	582.00	1.00
High Alarm	581.30	1.00
Low Alarm	563.66	1.00
Low-Low Alarm	561.66	1.00
Out-of-Range High	586.00	0.00
Out-of-Range Low	550.00	

Bumpless Program/Operator Transition

Extraction Well #1 Level

Extraction Well #1 Level

Label: LT-101

Tag: P_AIn

Raw Input Scaling

	Input		Scaled
Maximum	25.00		581.66
Minimum	0.00		557.40

Units FT

Disallow selection of Substitute PV

Clear Program Commands on receipt

PV Filter Time Constant (sec) 1.00
0.0 = unfiltered

Extraction Well #1 Level

Alarm Delay Time (seconds)

High-High	5
High	5
Low	5
Low-Low	5
Device Fail	5

Alarm	Ack Reqd	Reset Reqd	Severity 1	2	3	4
✔ High-High	✔					●
✔ High	✔			●		
✔ Low	✔			●		
✔ Low-Low	✔					●
✔ Device Fail	✔					●

Extraction Well #1 Level

High_High_Alarm

High_Alarm

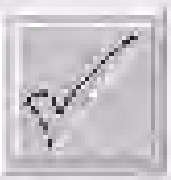

Low_Alarm

Low_Low_Alarm

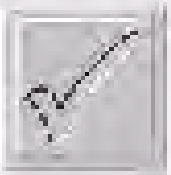

Device_Failure_Alarm

[PLC100]FIT_101_Totalizer

Program

P 0

Total 6114.816

Rate 15.50

Totalizer Running

Previous Total (before reset) 8106.73

Comm OK

[PLC100]FIT_101_Totalizer

Low input cutoff	2.00
Reset Value	0.00

[PLC100]FIT_101_Totalizer

Gain (multiplier for the incremental totalized value) 1.00

Time Base:

Seconds ● Minutes

Hours Days

Timing execution mode:

● Periodic Oversampling

Real-Time

RTS Period 1.000

Oversample Δt 0.000

Elapsed time in seconds used to calculate the process output. 0.02

[PLC100]FIT_101_Totalizer

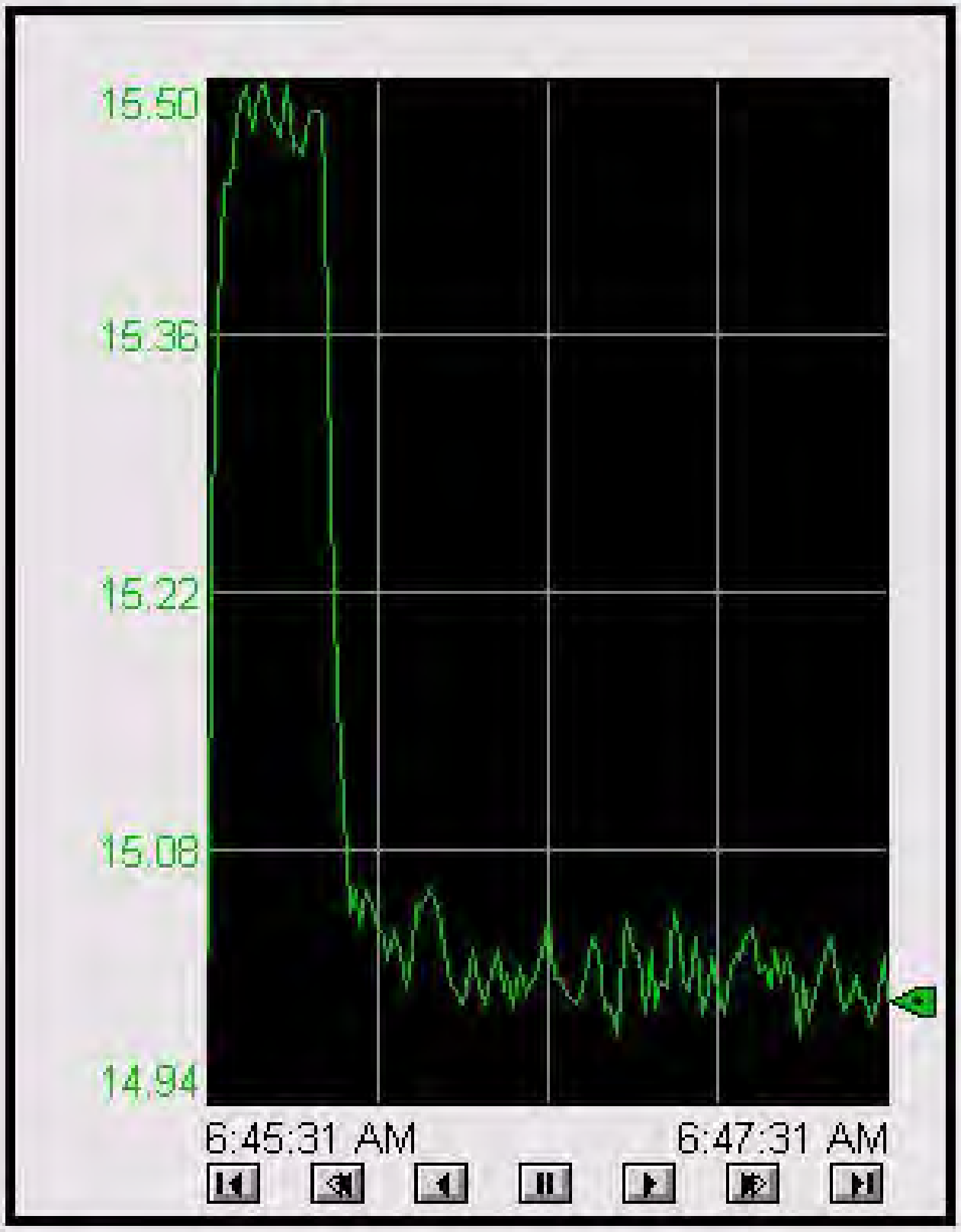

[PLC100]FCV_101_PIDE

O Operator

H I P O

Cascade

C A M

SP

15.06297

15.06 O

15.06 P

Ratio

1.00 O

1.00 P

+10% +1% -1% -10%

150

0

PV

15.01772

CV

53.51 O

53.51 P

100.00 H

0.00 L

-10% -1% +1% +10%

0% 100%

53.51443

Comm OK

[PLC100]FCV_101_PIDE

1 2 3

Ratio

1.00

1.00

Ratio Limits

200.00

0.00

1.00

SP Cascade

15.00

SP

15.06

15.06

SP Limits

150.00

0.00

PV

15.03

Error 0.04 15.06

PV EU Min/Max

150.00

0.00

10.02 10.04

Error % 0.02

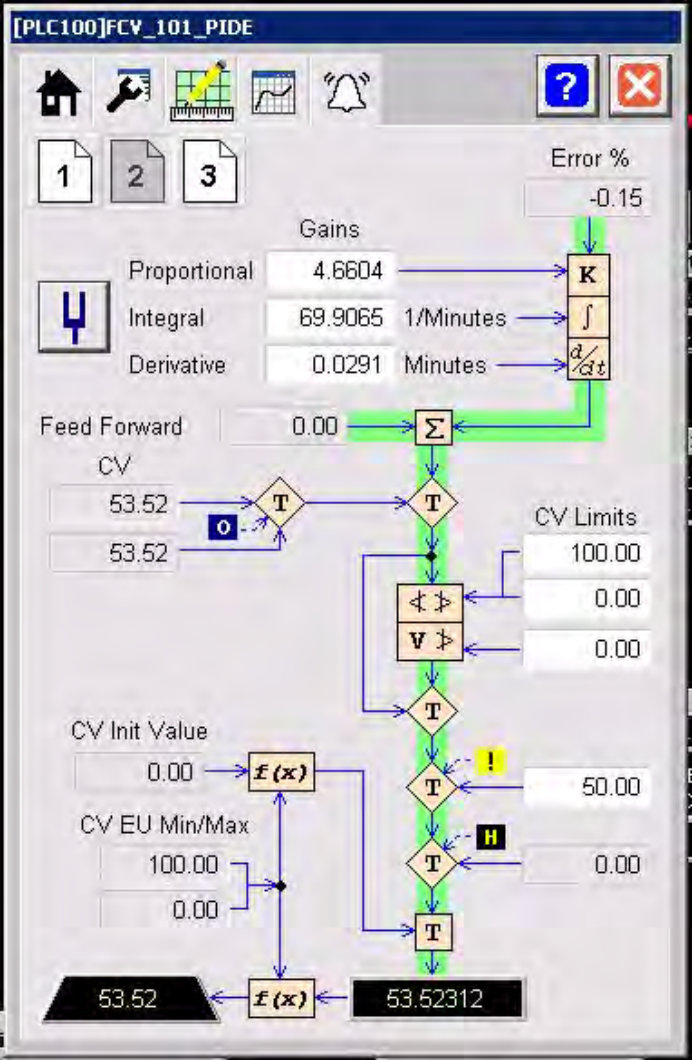
[PLC100]FCV_101_PIDE
1
2
3
Error %
-0.15
Gains
Proportional
4.6604
K
Integral
69.9065
1/Minutes
Derivative
0.0291
Minutes
Feed Forward
0.00
CV
53.52
53.52
CV Limits
100.00
0.00
0.00
CV Init Value
0.00
50.00
CV EU Min/Max
100.00
0.00
0.00
53.52
53.52312

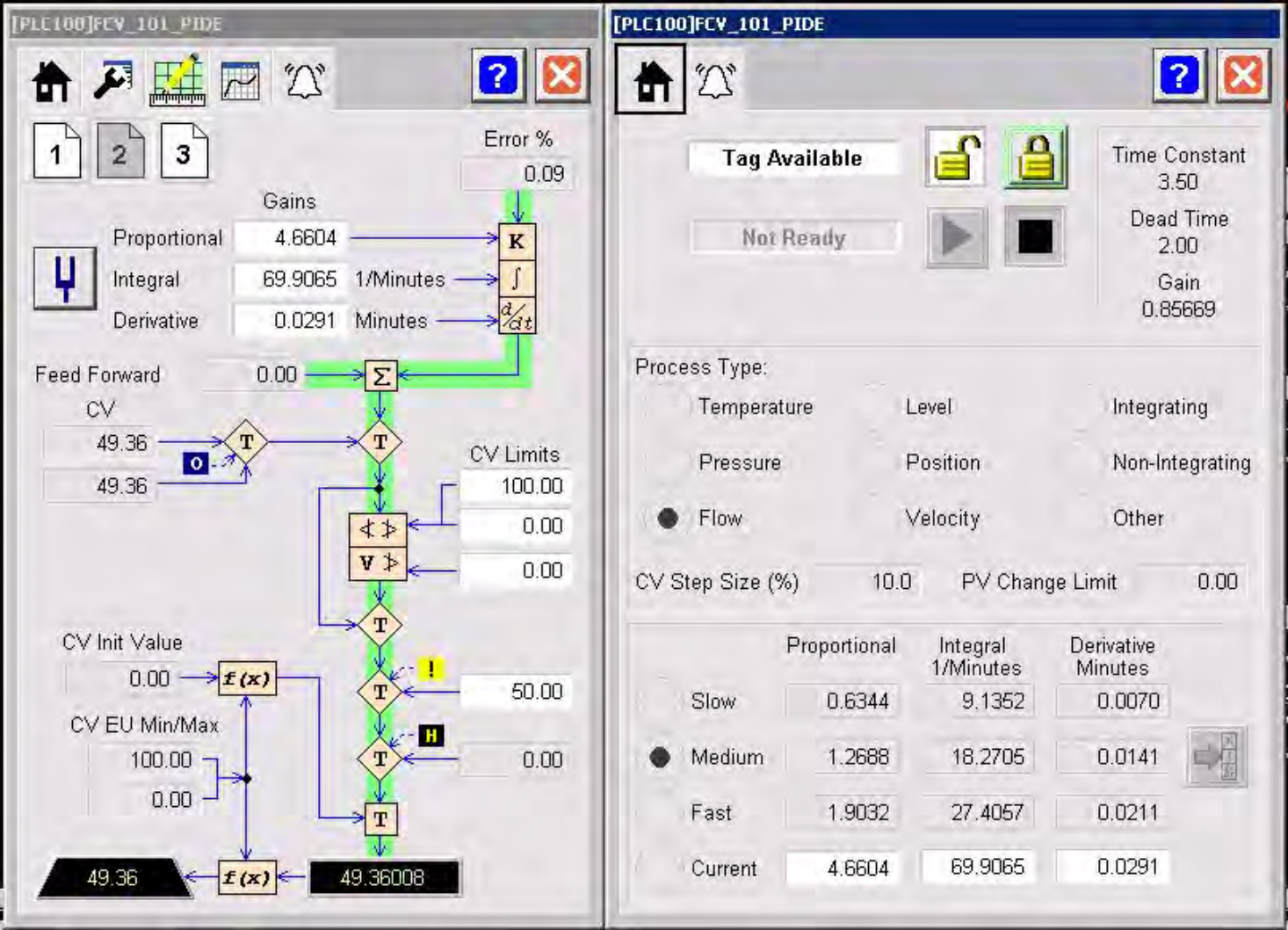
[PLC100]FCV_101_PIDE
1
2
3
Error %
0.09
Gains
Proportional
4.6604
Integral
69.9065
1/Minutes
Derivative
0.0291
Minutes
Feed Forward
0.00
CV
49.36
49.36
CV Limits
100.00
0.00
0.00
CV Init Value
0.00
50.00
CV EU Min/Max
100.00
0.00
0.00
49.36
49.36008
[PLC100]FCV_101_PIDE
Tag Available
Not Ready
Time Constant
3.50
Dead Time
2.00
Gain
0.85669
Process Type:
Temperature
Level
Integrating
Pressure
Position
Non-Integrating
Flow
Velocity
Other
CV Step Size (%)
10.0
PV Change Limit
0.00
Proportional
Integral 1/Minutes
Derivative Minutes
Slow
0.6344
9.1352
0.0070
Medium
1.2688
18.2705
0.0141
Fast
1.9032
27.4057
0.0211
Current
4.6604
69.9065
0.0291

[PLC100]FCV_101_PIDE

1 2 3

	Threshold	Deadband
PV High-High Alarm	3.40E38	
PV High Alarm	3.40E38	
PV Low Alarm	-3.40E38	0.00
PV Low-Low Alarm	-3.40E38	
High-High Deviation	3.40E38	
High Deviation	3.40E38	
Low Deviation	3.40E38	0.00
Low-Low Deviation	3.40E38	
PV Pos. ROC Limit	0.00	
PV Neg. ROC Limit	0.00	
PV ROC Period	0.00	
Zero Crossing Deadband		0.00

☐ Disable zero crossing for the deadband calculation

☑ Set to cause SP to track PV when in manual mode

[PLC100]FCV_101_PIDE

1 2

	PV	CV
Maximum EU	150.00	100.00
Minimum EU	0.00	0.00

CV Value in Override Mode 50.00

Timing execution mode:

● Periodic Oversampling

Real-Time

RTS Period (ms) 1

Oversample Δt (seconds) 0.000

Elapsed time in seconds used to calculate the process output. 0.50

[PLC100]FCV_101_PIDE

1 2

- [x] Allow Cascade/Ratio Mode
- [x] Use ratio control when in Cascade/Ratio mode
- [ ] Limit CV in Manual Mode
- [ ] Place instruction in Manual mode while CVInitializing is set
- [x] Reset Program Inputs after each execution
- [ ] Dependent Control - Use dependent form of PID equation
- [ ] Use Derivative Smoothing
- [x] Calculate the derivative term using the change in the process variable
- [ ] Calculate the proportional term using the change in the process variable

Calculate Error As:

E = PV - SP ● E = SP - PV

[PLC100]FCV_101_PIDE

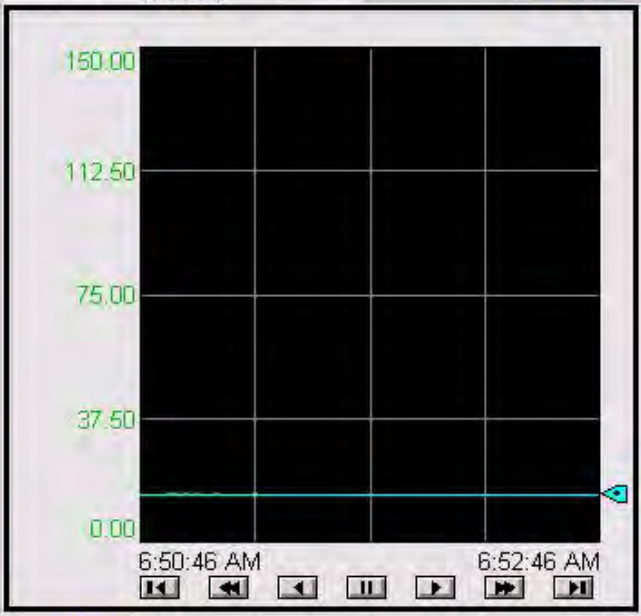

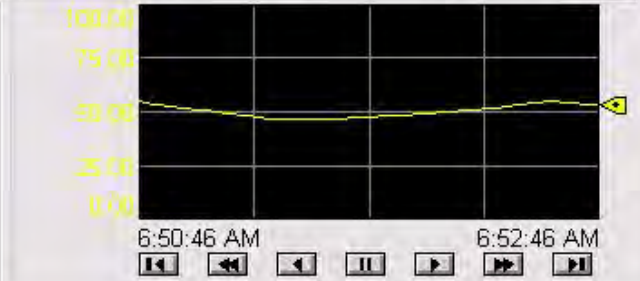

[PLC100]FCV_101_PIDE

PV_High_High_Alarm

PV_High_Alarm

PV_Low_Alarm

PV_Low_Low_Alarm

Deviation_High_High_Alarm

Deviation_High_Alarm

Deviation_Low_Alarm

Deviation_Low_Low_Alarm

SP_High_Alarm

SP_Low_Alarm

PV_Positive_ROC_Alarm

PV_Negative_ROC_Alarm

CV_High_Alarm

CV_Low_Alarm

CV_ROC_Alarm

Ratio_High_Alarm

Ratio_Low_Alarm

Tank T1 Level Switch Hi Hi

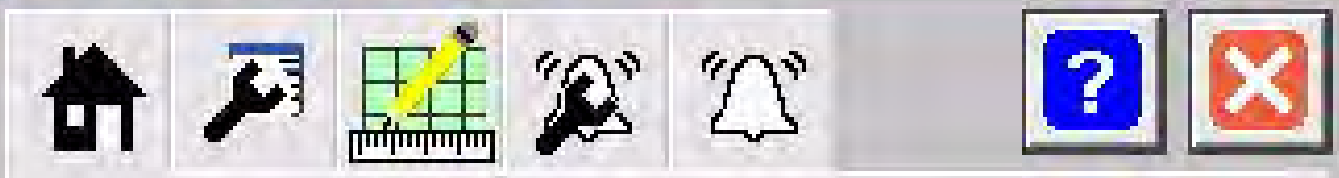

Normal

PV from Input Normal

Substitute PV

Alarm

Normal

Comm OK

P_Dln

Tank T1 Level Switch Hi Hi

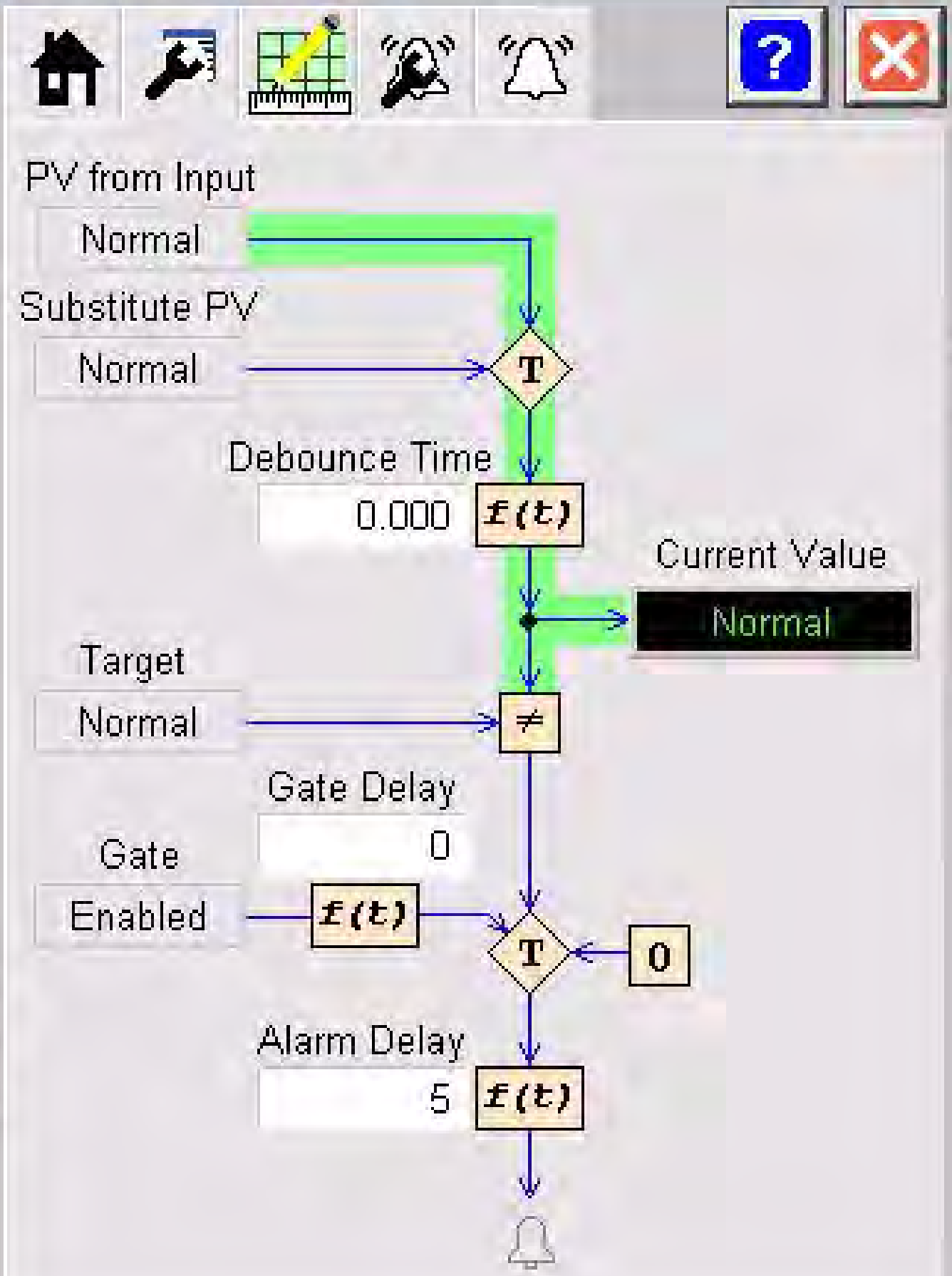

Tank T1 Level Switch Hi Hi

Tank T1 Level Switch Hi Hi

Label: LSHH-202

Tag: P_DIn

Text to Display in PV = 0 State: Alarm

Text to Display in PV = 1 State: Normal

Disallow selection of Substitute PV

Clear Program Commands on receipt

✔ Display state text in "normal" state (= target)

Tank T1 Level Switch Hi Hi

Alarm Delay Time (seconds)

Discrete Input Alarm	5

Alarm	Ack Reqd	Reset Reqd	Severity 1	2	3	4
✔ Target Disagree	✔	✔			●	

Tank T1 Level Switch Hi Hi

Discrete_Input_Alarm

APPENDIX E: Extraction Well Logs

BROWN AND CALDWELL

4700 Lakehurst Court Suite 100
Dublin, OH 43016

Boring/Hole #: EW-1 **Page No.:** 1 of 2

Project: Pfizer Holland
Client: Pfizer Inc.
Start Date: 5/18/10
Finish Date: 5/19/10
Project No.: 139194

BC Personnel: J. Warburton
Location: 188 Howard Avenue
Contractor: Mateco
Equipment: CME 750 ATV Rig
Method: 10.25" ID HSA

WELL CONSTRUCTION
Diameter (ID): 6"
Material: Steel
Coupling:
Hole Diameter: 14.25"

WELL DEVELOPMENT
Methods: Surged and Pumped
Duration: 0.5 hours
Vol. Purged: 580 gallons
Slug Test:

SURVEY DATA (NGVD29 and Michigan S.P. South)
Ground: 582.4 **North:** 477292.45
TOC: 584.63 **East:** 12653762.76

Depth (ft)	Well Construction	Symbol	Lithologic Description	Sample: Run	Type	Headspace, ppm	Blow Count	Recovery (ft)	Remarks
-3									
-2									
-1									
0			Ground Surface						
			(0-16') Auger to 16'						
1									
2									
3									
4									
5									
6									
7									
8									
9									
10									
11									
12									
13									
14									
15									
16									

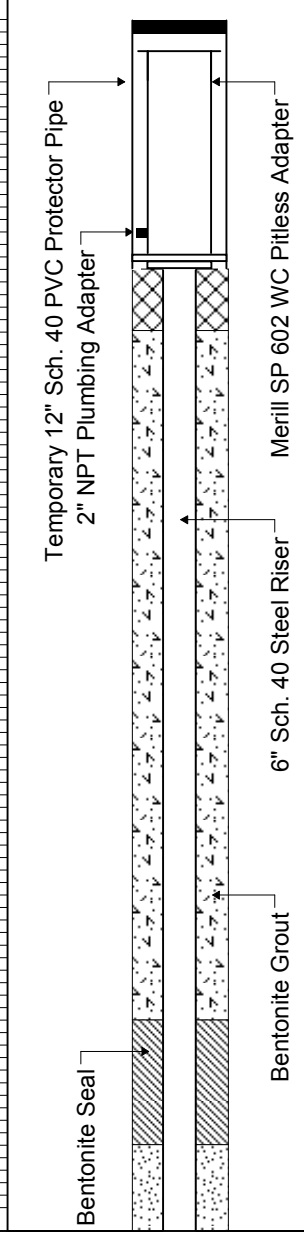

Boring/Hole #: EW-1 **Page No.:** 2 of 2

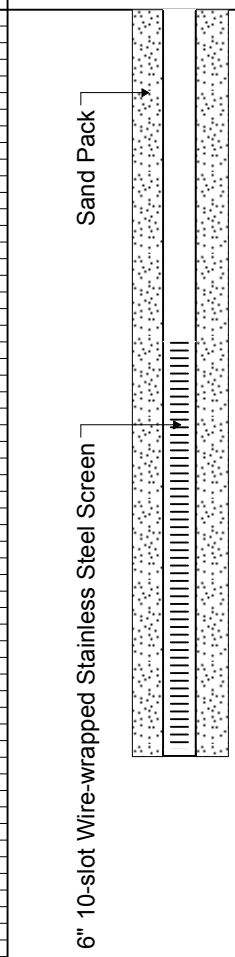

Depth (ft)	Lithologic Description	Run	Type	Headspace	Blow Count	Recovery (ft)	Remarks
17	(16.0-18.4') Sand, c-m-f, some (-) silt, gray, wet	1	SS	0.0	1-1-1-2	0.8	
18							
19	(18.4-18.9') Sand, c-m-f, some (+) silt, gray, wet	2	SS	0.0	1-1-1-2	0.9	
20	(20.0-21.0') Sand, c-m-f, some (-) silt, gray, wet	3	SS	0.0	2-2-2-2	1.0	
21							
22							
23	(23.0-23.6') Clay, some (+) sand and silt, gray	4	SS	0.0	2-1-1-2	1.5	
24	(23.6-24.2') Sand, c-m-f, little silt						
	(24.2-24.5') Silty clay, gray, soft						
25	(24.5-25.0') Sand, m-f, little silt						
	(25.0-26.0') Silty clay, little (+) f. sand, soft, medium plasticity	5	SS	0.0		1.5	
26	End of Log						
27							
28							
29							
30							
31							
32							
33							
34							
35							

HORIZON ENVIRONMENTAL
Grand Rapids Office
4771 50th St. S.E.
Grand Rapids, Michigan 49512

Soil Boring / Well Log

Soil Boring No.: EW-2R-3
Well No.: EW-2R-3
Client: Pfizer-Holland
Project Number: PFZ-01160

PROJECT INFORMATION

Site Name: Pfizer
Site Location: Holland MI
Horizon Representative: M. Potter
Date(s) Drilled: 1/16/14

DRILLER INFORMATION

Drilling Contractor: Stearns
Crew Chief: Jerry
Equipment: CME-1050
Drilling Method: 4 1/4" HSA

BORING INFORMATION

Boring Location:

Total Depth Drilled: 30' bgs
Water Levels: Encountered Water Level:

Ground Elevation:
Top of Casing Elevation:
Datum:
Static Water Level: 8 1/2' bgs

Depth	Elevation	Lith.	Soil Description	USCS	Sample	Blow Counts	Rec. (in.)	PID Reading (ppm)
0	0		Blind drilled					
10	-10		PEAT, trace sand					
			SAND, fine to medium, some silt					
20	-20		SAND, medium to coarse, some fine sand, trace fine gravel					
			SAND, fine, trace gravel and coarse sand					
25	-25		PEAT, silty					
			SAND, fine					
			SAND, silty, trace organics					
30	-30		SILT, trace fine sand EOB 30' bgs					

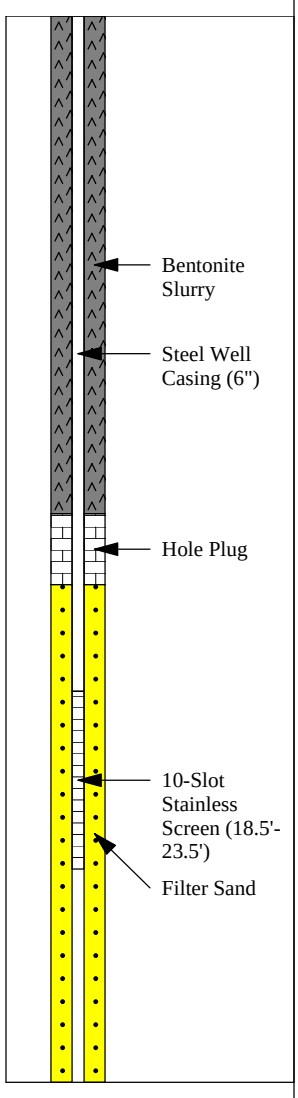

Notes:

BROWN AND CALDWELL

4700 Lakehurst Court Suite 100
Dublin, OH 43016

Boring/Hole #: EW-2 **Page No.:** 1 of 2

Project: Pfizer Holland
Client: Pfizer Inc.
Start Date: 5/12/10
Finish Date: 5/14/10
Project No.: 139194

BC Personnel: J. Warburton
Location: 188 Howard Avenue
Contractor: Mateco
Equipment: CME 750 ATV Rig
Method: 10.25" ID HSA

WELL CONSTRUCTION
Diameter (ID): 6"
Material: Steel
Coupling:
Hole Diameter: 14.25"

WELL DEVELOPMENT
Methods: Surged and Pumped
Duration: 1 hour
Vol. Purged: 600 gallons
Slug Test:

SURVEY DATA (NGVD29 and Michigan S.P. South)
Ground: 584.5 **North:** 477438.41
TOC: 584.54 **East:** 12654115.83

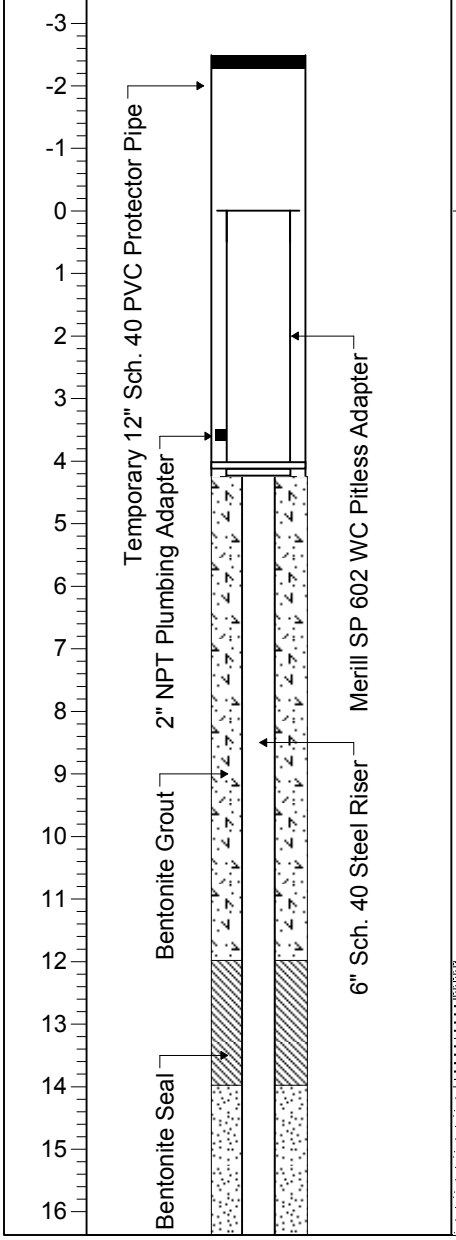

Depth (ft)	Well Construction	Symbol	Lithologic Description	Sample: Run	Type	Headspace, ppm	Blow Count	Recovery (ft)	Remarks
-3									
-2									
-1									
0			Ground Surface						
			(0-12') Auger to 12'						
1									
2									
3									
4									
5									
6									
7									
8									
9									
10									
11									
12			(12.0-12.6') Peat, brown, wet						
13			(12.6-14.0') Sand, m-f, little silt, gray, wet	1	SS		2-2-2-2	2.0	
14			(14.0-16.9') Sand, c-m-f, little silt, gray, wet						
15				2	SS		1-1-1-1	2.0	
16									

Boring/Hole #: EW-2 **Page No.:** 2 of 2

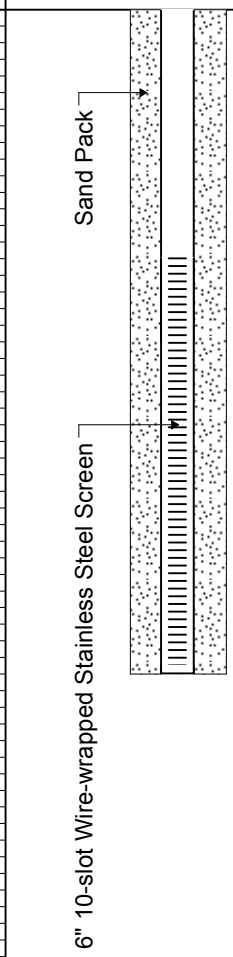

Depth (ft)	Lithologic Description	Run	Type	Headspace	Blow Count	Recovery (ft)	Remarks
17		3	SS	0.0	Wt/18"-1	0.9	
18	(18.0-18.6') Silty clay, gray, medium plasticity, moist	4	SS	0.0	Wt/12"-1/12"	1.8	
19							
20	(20.0-20.4') C. sand, gray (20.4-20.6') Peat, brown	5	SS	0.0	2-2-2-3	0.6	
21							
22	(22.0-22.4') C. sand (22.4-22.7') Silty clay (22.7-23.4') Sand, m-f, trace silt	6	SS	0.0	Wt/12"-1-3	1.4	
23							
24	(24.0-25.5') Sand, little (+) silt, gray	7	SS	0.0	2-2-2-2	2.0	
25							
26	(25.5-26.0') Silty clay, gray End of Log						
27							
28							
29							
30							
31							
32							
33							
34							
35							

BROWN AND CALDWELL

4700 Lakehurst Court Suite 100
Dublin, OH 43016

Boring/Hole #: EW-3 **Page No.:** 1 of 2

Project: Pfizer Holland
Client: Pfizer Inc.
Start Date: 5/14/10
Finish Date: 5/14/10
Project No.: 139194

BC Personnel: J. Warburton
Location: 188 Howard Avenue
Contractor: Mateco
Equipment: CME 750 ATV Rig
Method: 10.25" ID HSA

WELL CONSTRUCTION
Diameter (ID): 6"
Material: Steel
Coupling:
Hole Diameter: 14.25"

WELL DEVELOPMENT
Methods: Surged and Pumped
Duration: 0.3 hours
Vol. Purged: 240 gallons
Slug Test:

SURVEY DATA (NGVD29 and Michigan S.P. South)
Ground: 585.2 **North:** 477783.70
TOC: 585.12 **East:** 12654299.64

Depth (ft)	Well Construction	Symbol	Lithologic Description	Sample: Run	Type	Headspace, ppm	Blow Count	Recovery (ft)	Remarks
-3									
-2									
-1									
0			Ground Surface						
			(0-16') Auger to 16'						
1									
2									
3									
4									
5									
6									
7									
8									
9									
10									
11									
12									
13									
14									
15									
16									

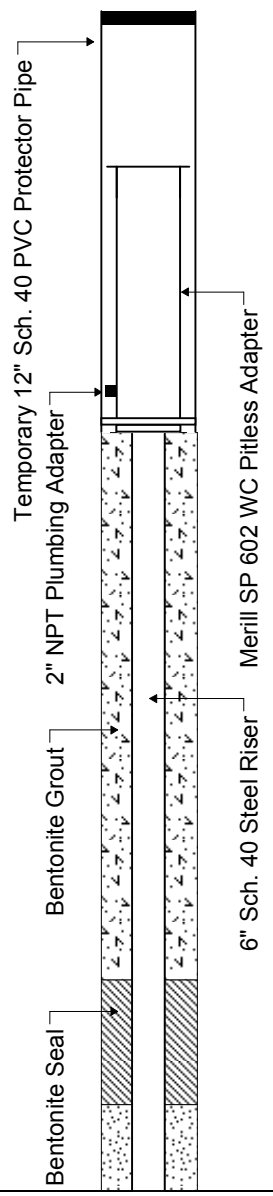

Boring/Hole #: EW-3 **Page No.:** 2 of 2

Depth (ft)	Well Construction	Symbol	Lithologic Description	Sample Run	Type	Headspace	Blow Count	Recovery (ft)	Remarks
17, 18	Sand Pack; 6" 10-slot Wire-wrapped Stainless Steel Screen		(16.0-18.8') Sand, c-m-f, trace silt, gray, wet	1	SS	0.0	2-2-2-2	1.4	
19			(18.8-19.5') Sand, m-f, little silt, gray, wet	2	SS	0.0	2-2-3-3	1.5	
20, 21, 22			(20.0-21.0') Sand, c-m-f, trace silt, gray, wet	3	SS	0.0	2-2-2-2	1.0	
23			(22.5-23.4') F. sand, some (-) silt, gray	4	SS	0.0	2-2-2-2	1.5	
24, 25			(24.0-25.0') F. sand, some (+) silt and clay, gray, wet	5	SS	0.0	NR	1.0	
26			(26.0-26.4') Silty f. sand						
27			(26.4-27.4') Silty clay, gray-brown, medium plasticity, moist	6	SS	0.0	1-2-2-3	1.4	
28			End of Log						
29, 30, 31, 32, 33, 34, 35									

BROWN AND CALDWELL

4700 Lakehurst Court Suite 100
Dublin, OH 43016

Boring/Hole #: EW-4 **Page No.:** 1 of 2

Project: Pfizer Holland
Client: Pfizer Inc.
Start Date: 5/17/10
Finish Date: 5/18/10
Project No.: 139194

BC Personnel: J. Warburton
Location: 188 Howard Avenue
Contractor: Mateco
Equipment: CME 750 ATV Rig
Method: 10.25" ID HSA

WELL CONSTRUCTION
Diameter (ID): 6"
Material: Steel
Coupling:
Hole Diameter: 14.25"

WELL DEVELOPMENT
Methods: Surged and Pumped
Duration: 0.5 hours
Vol. Purged: 800 gallons
Slug Test:

SURVEY DATA (NGVD29 and Michigan S.P. South)
Ground: 584.9 **North:** 477966.71
TOC: 584.52 **East:** 12654424.20

Depth (ft)	Well Construction	Symbol	Lithologic Description	Sample: Run	Type	Headspace, ppm	Blow Count	Recovery (ft)	Remarks
-3									
-2									
-1									
0			Ground Surface						
1			(0-16') Auger to 16'. Pea gravel at 4', offset 5' North, re-auger to 16'						
2									
3									
4									
5									
6									
7									
8									
9									
10									
11									
12									
13									
14									
15									
16									

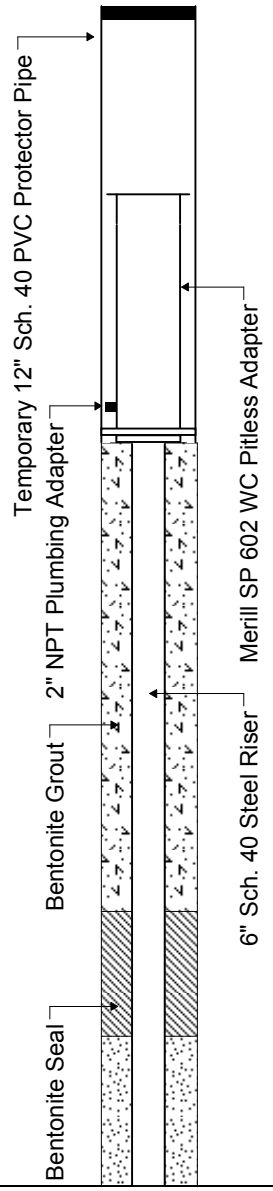

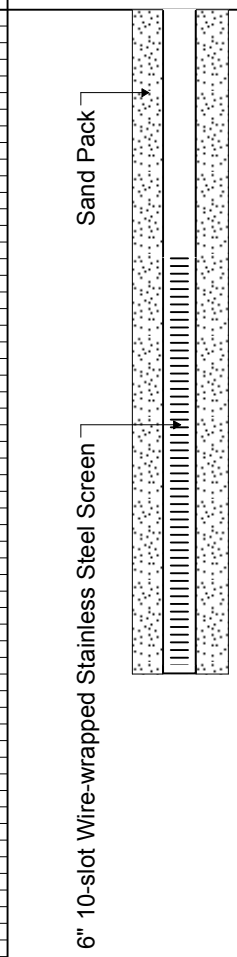

Depth (ft)	Lithologic Description	Run	Type	Headspace	Blow Count	Recovery (ft)	Remarks
17, 18, 19, 20	(16.0-20.6') F. sand, some (-) silt, gray, wet	1	SS	0.0	6-4-2-2	1.0	
		2	SS	0.0	5-4-3-4	1.7	
21	(20.6-20.8') Wood fragments and peat, brown	3	SS	0.0	2-2-2-1	1.4	
	(20.8-21.4') Sand, m-f, trace c. sand, little silt						
22	(22.0-22.4') Sand, c-m-f, gray						
23	(22.4-22.9') Silty clay, trace f. sand, soft, medium plasticity	4	SS	0.0	2-2-1-1	0.9	
24	(24.0-24.3') Sand and gravel, some (-) silt and clay, dark brown, wet	5	SS	0.0	1-1-1-1	1.4	
25	(24.3-24.8') Silty clay						
26	(24.8-25.9') Silty clay, some f. sand						
	End of Log						

Depth (ft): 17, 18, 19, 20, 21, 22, 23, 24, 25, 26, 27, 28, 29, 30, 31, 32, 33, 34, 35

BROWN AND CALDWELL

4700 Lakehurst Court Suite 100
Dublin, OH 43016

Boring/Hole #: EW-5 **Page No.:** 1 of 2

Project: Pfizer Holland
Client: Pfizer Inc.
Start Date: 5/19/10
Finish Date: 5/19/10
Project No.: 139194

BC Personnel: J. Warburton
Location: 188 Howard Avenue
Contractor: Mateco
Equipment: CME 750 ATV Rig
Method: 10.25" ID HSA

WELL CONSTRUCTION
Diameter (ID): 6"
Material: Steel
Coupling:
Hole Diameter: 14.25"

WELL DEVELOPMENT
Methods: Surged and Pumped
Duration: 2 hours
Vol. Purged: 300 gallons
Slug Test:

SURVEY DATA (NGVD29 and Michigan S.P. South)
Ground: 584.7 **North:** 478221.32
TOC: 584.56 **East:** 12654295.02

Depth (ft)	Well Construction	Symbol	Lithologic Description	Sample: Run	Type	Headspace, ppm	Blow Count	Recovery (ft)	Remarks
-3									
-2									
-1									
0			Ground Surface						
			(0-16') Auger to 16'.						
1									
2									
3									
4									
5									
6									
7									
8									
9									
10									
11									
12									
13									
14									
15									
16									

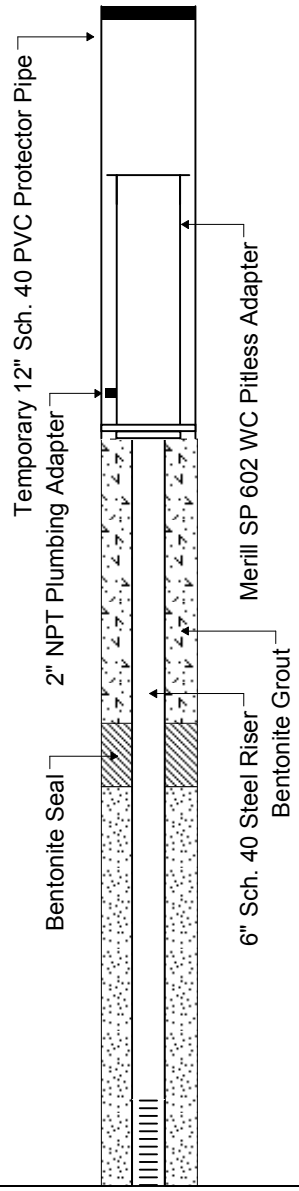

Boring/Hole #: EW-5 **Page No.:** 2 of 2

Depth (ft)	Well Construction	Symbol	Lithologic Description	Sample Run	Type	Headspace	Blow Count	Recovery (ft)	Remarks
17	Sand Pack		(16.0-16.3') Sand, c-m-f, some (-) silt, gray, wet (16.3-16.7') Silty clay, little f. sand (16.7-19.0') Sand, m-f, little silt	1	SS	0.0	1-1-3-6	1.3	
18									
19	6" 10-slot Wire-wrapped Stainless Steel Screen		(19.0-19.2') Silty clay, little (+) f. sand	2	SS	0.0	2-2-2-1	1.2	
20			(20.0-23.5') Silty clay, little (-) f. sand, gray, medium plasticity, moist						
21				3	SS	0.0	2-2-2-2	1.4	
22									
23				4	SS	0.0	1-1-1-1	1.5	
24			End of Log						
25									
26									
27									
28									
29									
30									
31									
32									
33									
34									
35									

APPENDIX F: Management of Change Form

Management of Change Form

FACILITY				
PROCESS INVOLVED				
PROPOSED CHANGE DATE				
Date:		☐ Permanent ☐ Temporary - Duration		
REQUESTER				
Prepared By:		Title:		Date:
TYPE OF CHANGE (cirle one)				
Facility	Technology	Equipment	Procedure	Controls
DESCRIPTION OF PROPOSED CHANGE				
Describe the proposed change and the technical basis.				
RISK ASSESSMENT				
Describe potential risks and mitigating steps.				
HEALTH AND SAFETY				
Describe any potential health and safety impacts resulting from the proposed change.				
TECHNICAL REVIEW				
By:		Title:		Date:
Signature:				
AUTHORIZATION TO PROCEED WITH CHANGE				
By:		Title:		Date:
Signature:				

DOCUMENTATION & TRAINING		
(To be completed prior to startup)	Answer (circle)	Date (if yes)
Have affected personnel (i.e., operations, maintenance, and contract) been informed of and trained in this change?	YES NO	
Are operating procedures or maintenance procedures required to be updated as a result of this change?	YES NO	
If yes, have affected personnel been trained in the updated operating procedures?	YES NO	
Are drawings or P&IDs required to be updated as a result of this change? Redline drawings as needed.	YES NO	

AUTHORIZATION FOR STARTUP				
By:		Title:		Date:
Signature:				

APPENDIX G: Troubleshooting Guide

Abnormal Condition	Possible Cause	Suggested Corrective Action
Low Flow, Extraction Well(s)	Plugged filter Pump wear, plugging, or failure. Plugged piping Instrument Malfunction	Replace bags. Inspect pump, replace as needed. Inspect piping, clean as needed. Inspect Flow Control loop for the affected well – flow meter and flow control valve.
High Flow, Extraction Well	Incorrect Set Point Instrument Malfunction Shutdown of other extraction wells.	Adjust set point. Inspect Flow Control loop for the affected well – flow meter and flow control valve. The system controls will attempt to extract the same quantity of water, even if a well shuts down. Adjust injection and extraction flow set points as needed.
Low Level, Extraction Well	Excess Extraction Rate Well fouled	Reduce target flow rate for the affected well, wait 4 hours before restarting, balance system flows as needed. Redevelop the well.
Hi or Lo pH	pH meter malfunction	Clean and calibrate pH probe.
High pressure injection well(s)	Excessive Injection Rate Injection well(s) fouled	Reduce total injection flow rate set point. Schedule maintenance on wells.
Lo Flow injection well(s)	Pump wear, plugging, or failure Plugged piping Instrument malfunction	Inspect pump, repair as needed. Inspect piping, clean as needed. Inspect flow transmitter and automatic isolation valve.
Low level annulus fluid tank	Temperature change Leak in well tube or annulus casing	Add fluid, monitor level. Consult permit for additional information. Isolate well until repairs can be made.
Low annulus pressure	Low Nitrogen supply pressure Instrument malfunction Nitrogen tubing or piping restricted	Replace Nitrogen cylinders. Inspect Nitrogen regulator and pressure instrumentation. Check all valving, inspect for restrictions.
Total extraction flow is different from total injection flow	Instrument malfunction Flow into disabled well	Inspect and calibrate flow transmitters as needed. Inspect wells, close or repair block valves and check valves as needed.

APPENDIX H: Alarm and Interlock Test Form

Alarm & Interlock Test Form

FACILITY

ALARM & INTERLOCK TO BE TESTED	
Equipment:	Instrument ID:

SET-POINTS PRIOR TO TEST	
Alarm:	Interlock:

ALARM TEST METHOD	
☐ Simulate Condition (in Field) ☐ Simulate a Process Variable (in HMI) ☐ Change Alarm Set-point (in HMI)	Notes:

ALARM TEST	UNITS	PRIOR TO TEST	TEST	AFTER TEST
Alarm Set-Point				
Process Value				

Describe test and results.

INTERLOCK TEST METHOD	
☐ Simulate Condition (in Field) ☐ Simulate a Process Variable (in HMI) ☐ Change Interlock Set-point (in HMI)	Notes:

INTERLOCK TEST	UNITS	PRIOR TO TEST	TEST	AFTER TEST
Interlock Set-Point				
Process Value				

Describe test and results.

SET-POINTS AFTER THE TEST	
Alarm:	Interlock:

TEST CERTIFICATION	
I certify that the above testing was completed and the alarms and interlocks functioned as stated. I further certify that all instrumentation and set-points were returned to their normal operating condition at the conclusion of the testing.	
Name:	Title:
Signature:	Date:

Appendix H

Hydraulic Containment System-Performance Monitoring Plan

PERFORMANCE MONITORING PLAN

HYDRAULIC CONTAINMENT

Warner-Lambert Company, LLC – Holland, MI
February 2015

Prepared for
Pfizer, Inc.

TABLE OF CONTENTS

LIST OF FIGURES....II

LIST OF TABLES....II

LIST OF ATTACHMENTS....II

LIST OF ACRONYMS....III

1. INTRODUCTION....1-1
   1.1 Plan Organization....1-1

2. PERFORMANCE MONITORING....2-1
   2.1 Hydraulic Monitoring....2-2
      2.1.1 Piezometer Pair Water Levels....2-2
      2.1.2 Extraction Well Withdrawal Rates....2-3
   2.2 Extraction Well and Piezometer Inspections....2-3
   2.3 System Modifications....2-4
   2.4 Contingency Plan....2-4

3. REPORTING....3-1

LIST OF FIGURES

Figure 2-1 Hydraulic Containment System
Figure 2-2 Well Inspection Form

LIST OF TABLES

Table 2-1 Summary of Performance Monitoring Activities....2-1
Table 2-2 Summary of Piezometer Pairs....2-2
Table 2-3 Summary of Extraction Wells....2-3

LIst of Attachments

Attachment 1 Contingency Plan

LIST OF ACRONYMS

COC	Constituent of Concern
gpm	Gallons per Minute
IRM	Interim Response Measure
MDEQ	Michigan Department of Environmental Quality
MSU	Michigan State University
MWD	Macatawa Warehouse Development
PLC	Programmable Logic Controller
PMP	Performance Monitoring Plan
SAP	Sampling and Analysis Plan
SVOC	Semivolatile Organic Compound
USEPA	United States Environmental Protection Agency
VOC	Volatile Organic Compound

1. INTRODUCTION

This Performance Monitoring Plan (PMP) addresses the groundwater barrier wall installed at the Warner-Lambert Company, LLC's former Plant Site in Holland, Michigan. The primary objective of the barrier wall, and associated groundwater extraction system, is to provide hydraulic containment of groundwater impacted by former manufacturing activities at the Plant Site. The primary components of this remedial system include:

- A full perimeter groundwater barrier wall;
- A network of groundwater extraction wells and associated conveyances;
- A groundwater treatment system;
- Three existing deep injection wells for discharge of the treated groundwater;
- A network of piezometer pairs designed to demonstrate and monitor the effectiveness of the hydraulic containment; and
- A monitoring well located on the MSU property south of Building 400 installed as a contingency that can be pumped to relieve groundwater mounding on the upgradient, northwest side of the wall, if observed.

The purpose of this PMP is to describe the monitoring required to evaluate the effectiveness of the remedy, and to demonstrate that the remedy meets the primary performance objective. This primary performance objective is the creation and maintenance of an inward groundwater gradient across the barrier wall along the entire length of the wall. Hydraulic monitoring is the mechanism used to gauge the effectiveness of the hydraulic containment remedy in preventing migration of groundwater from the Plant Site.

1.1 Plan Organization

This plan is organized as follows:

- Section 1 – Introduction and plan organization;
- Section 2 – Performance Monitoring; and
- Section 3 – Reporting.

2. PERFORMANCE MONITORING

Components of the hydraulic containment system are depicted on Figure 2-1. These components include the following:

- A full perimeter low permeability grouted groundwater barrier wall, measuring approximately 4,286-feet long by not less than 2.5-feet wide, intersecting both the upper and lower aquifers and keyed a minimum of three (3) feet into the underlying confining layer (varying in depth from approximately 45- to 80-feet below ground surface);
- Five groundwater extraction wells;
- Eleven piezometer pairs;
- A groundwater treatment process;
- Three deep aquifer injection wells; and
- A monitoring well, MW-51, located on the MSU property south of Building 400 installed as a contingency that can be pumped to relieve groundwater mounding on the upgradient, northwest side of the wall, if observed.

This PMP includes several components designed to verify the remedial system achieves its primary performance objective. These components are summarized in Table 2-1 and discussed in the following subsections. Subsection 2.1 describes the hydraulic monitoring component of the PMP. Subsection 2.2 describes the well and piezometer inspection protocol. Subsection 2.3 describes system modification procedures. Subsection 2.4 describes the system Contingency Plan. Section 3.0 describes the reporting component of the PMP.

Table 2-1 Summary of Performance Monitoring Activities

Activity	Performance Criteria	Frequency	Reporting Frequency	Comment
Monitor Groundwater Extraction Operations	Gradient Control	Automated	Quarterly	Maintain target extraction well groundwater flow rates (monitored by PLC with remote alarm notification).
Extraction Well Volumes	Gradient Control	Monthly	Quarterly	Total gallons per month per well
Piezometer Pair Water Levels and Visual Inspection	Gradient Control	Monthly	Quarterly	If <0.5-ft inward gradient, repeat water levels in one week[1]
Quarterly Report		Quarterly	Quarterly	Monitoring Data
Extraction Well Inspections		Annual	Annual	Schedule any repairs needed (See Figure 2-2)
Piezometer Pair Inspections		Annual	Annual	Schedule any repairs needed (See Figure 2-2)
Annual Report		Annual	Annual	Performance review and summary of quarterly data

NOTE:
1 If less than 0.5 foot inward gradient is confirmed, initiate contingencies as identified in Attachment 1 to this PMP, as needed.

The three deep injection wells are not addressed in this PMP. Instead, the use of these wells is regulated by the Plant Site's Underground Injection Control Permits as obtained by Pfizer from the USEPA and a Part 625 Mineral Well Permit from the MDEQ Office of Geological Survey.

2.1 Hydraulic Monitoring

The hydraulic monitoring component of this PMP includes monitoring the water levels in the designated piezometer pairs, the water levels in the extraction wells, and the withdrawal rates of the extraction wells. The hydraulic monitoring program is designed to ensure there is an inward gradient across the barrier wall from the outside of the wall to the inside of the barrier wall, with a target groundwater elevation difference across the barrier wall of one foot. The gradient across the barrier wall will be measured using shallow piezometer pairs. The scope of work associated with each of these tasks is described in the following subsections.

2.1.1 Piezometer Pair Water Levels

The piezometer monitoring network consists of 11 pairs of piezometers, for a total of 22 piezometers. Each piezometer pair consists of a piezometer located approximately five feet inside (e.g., PZ-3-I) the barrier wall, paired with another piezometer located approximately five feet outside the barrier wall (e.g., PZ-3-O). Piezometer pairs screened in the lower sand aquifer were installed at two locations. The deep piezometers are identified by the suffix "D" and are used to evaluate vertical gradient between the upper and lower aquifers. The inward ground water gradient across the barrier wall is not an applicable goal for the lower sand aquifer piezometer pairs. The locations of the piezometer pairs are shown on Figure 2-1 and summarized in Table 2-2.

Table 2-2 Summary of Piezometer Pairs

Piezometer Pair ID	Barrier Wall Station
PZ-1	3+00
PZ-2	9+00
PZ-3	12+95
PZ-3D (Deep Aquifer)	13+05
PZ-4	16+40
PZ-5	19+30
PZ-5D (Deep Aquifer)	19+40
PZ-6	22+50
PZ-7	25+30
PZ-8	32+30
PZ-9	38+60

Manual water level measurements are obtained and recorded from the piezometers on a monthly basis. If a reduced gradient condition (defined as less than 0.5 foot of head difference) is observed at any of the piezometer pairs, contingency actions as specified in Attachment 1 will be initiated, as appropriate.

The extraction well network consists of five extraction wells located within the Plant Site, situated to achieve the required gradient across the barrier wall between Stations 7+00 and 24+00. The locations of the extraction wells are shown on Figure 2-1 and summarized in Table 2-3.

The historical operating range for flow rate at each extraction well is also provided in Table 2-3. Each extraction well is equipped with a pressure transducer (level transmitter) that is monitored by the programmable logic controller (PLC) at the pretreatment building. The groundwater extraction flow rate at each well will be maintained at an operator-adjustable set-point by individual flow control instruments located in the pretreatment building. The set-points can be adjusted, as needed, based on well drawdown and observed gradients to maintain inward gradients and optimize the performance of the system. To protect the extraction pumps, the PLC will shut down an extraction well pump if the water level in the well gets too low. The well will resume pumping after a prescribed time interval to allow the well to recover.

Table 2-3 Summary of Extraction Wells

Extraction Well ID	Withdrawal Rates (typical range)	Barrier Wall Station
EW-1	10-20 gpm	7+00
EW-2*	0-10 gpm	14+50
EW-3	10-18 gpm	18+50
EW-4	0-8 gpm	21+00
EW-5	0-2 gpm	24+00

gpm – gallons per minute

Note:

* Due to the proximity of EW-2 to the historic LNAPL area, two sentinel piezometers, screened across the water table, have been installed to monitor for potential movement of the LNAPL. One is adjacent to EW-2, and the second is located between the LNAPL and EW-2. Additionally, the low level alarm on well EW-2 is set 1.5-feet above the top of the well screen to prevent LNAPL from entering the well.

2.1.2 Extraction Well Withdrawal Rates

Water withdrawal rates are monitored and adjusted as necessary to maintain conformance with the performance criteria specified in Subsection 2.1.1. Totalized flow volumes will be determined on a monthly basis and used to track extraction over time.

2.2 Extraction Well and Piezometer Inspections

The barrier wall maintenance procedures are designed to provide routine inspection of the extraction well system and piezometers to ensure integrity. An example well inspection form is provided as Figure 2-2. These inspections will be conducted annually and will include the following:

Extraction Wells

- Check condition and security of wellhead and equipment;

Piezometers

- Check condition of piezometer surface casing and concrete pad;
- Check condition of lock; and
- Sound piezometer bottom to check for sedimentation.

2.3 System Modifications

Should system modifications be necessary to address observed conditions (e.g., additional extraction wells/piezometers, physical modification to injection/treatment systems, etc.), a plan for the proposed modifications along with supporting rationale for the changes will be presented to the Michigan Department of Environmental Quality (MDEQ) for review and approval prior to implementation.

2.4 Contingency Plan

If performance monitoring indicates the presence of a reduced gradient condition at one or more of the piezometer pairs, contingent actions are proposed to be implemented in accordance with the Contingency Plan provided in Attachment 1.

3. REPORTING

Two types of reports will be generated under this PMP for submittal to MDEQ. These reports are Quarterly Reports and Annual Reports. Each of these report types will be submitted in both hard copy and electronic format and will contain certification language executed by a signatory duly authorized pursuant to the requirements of 40 CFR 270.11. The electronic deliverable will include a spreadsheet or database file with the cumulative monitoring results to-date. A report cover page will be developed for each type of report to clearly state whether the hydraulic performance criteria were achieved for the reporting period.

The Quarterly Reports will be submitted within 45 days following the end of the first, second and third quarters and will primarily consist of transmitting monitoring data obtained during that quarter (e.g., groundwater elevations in piezometers, and calculated average pumping rates and volumes, both for individual wells and cumulatively). In addition, performance criteria non-conformances, if any, experienced during the quarter will be described, along with recommended corrective measures. The Annual Reports will include monitoring data from all four quarters of the year (i.e., a separate fourth quarter report will not be prepared) and will be submitted within 60 days following the end of each calendar year and will include the following information:

- Monitoring data obtained during the year;
- Recap of the performance criteria non-conformances, if any, experienced during the year and any corrective measures;
- Groundwater elevation table showing the groundwater elevations from the piezometer pairs over time, including trend analyses as appropriate;
- Contaminant mass removal calculations, including a trend analysis over time;
- Proposed adjustments to the PMP; and
- Action items.

FIGURES

PFZ01143F02-1B

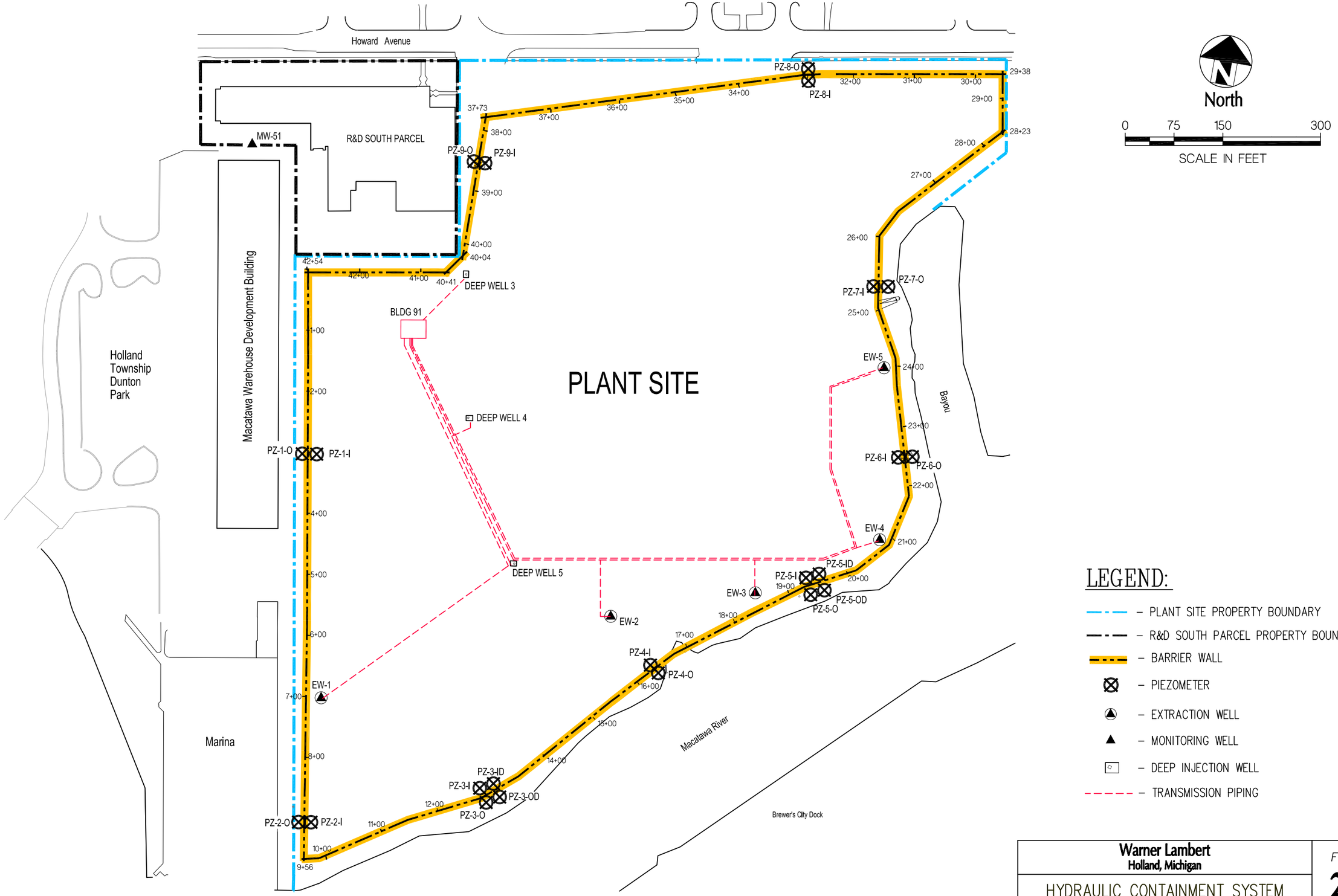

LEGEND:

- PLANT SITE PROPERTY BOUNDARY
- R&D SOUTH PARCEL PROPERTY BOUNDARY
- BARRIER WALL
- PIEZOMETER
- EXTRACTION WELL
- MONITORING WELL
- DEEP INJECTION WELL
- TRANSMISSION PIPING

Warner Lambert
Holland, Michigan

HYDRAULIC CONTAINMENT SYSTEM
COMPONENT CONFIGURATION

FIGURE:
2-1
FEBRUARY 2015

J:\Lvanprooyen\DWGS\PFZ\01143\PFZ01143F02-1B.dwg, 2/3/2015 4:29:24 PM, Adobe PDF.pc3

FIGURE 2-2
WELL INSPECTION FORM

SITE NAME _____ DATE _____

PROJECT NUMBER _____ SAMPLER _____

WELL OR PIEZOMETER NO.							
DEPTH TO WELL BOTTOM (FT)							
WELL NUMBER LEGIBLE (A/U)							
REFERENCE POINT (A/U)							
PROTECTIVE CASING (A/U)							
PROTECTIVE CASING CAP (A/U)							
LOCKED (A/U)							
WELL CAP (A/U)							
DRAINAGE (A/U)							
SURFACE SEAL (A/U) (IF DAMAGED DESCRIBE BELOW)							
VISUAL DAMAGE (A/U) (DESCRIBE BELOW)							

A - Acceptable. U - Unacceptable - describe below and schedule repairs.

COMMENTS/OBSERVATIONS:

_____

_____

_____

_____

_____

_____

_____

_____

_____ _____ _____ _____
Signed Date QC'd By Date

ATTACHMENT 1

CONTINGENCY PLAN

ATTACHMENT 1

CONTINGENCY PLAN

The groundwater extraction, treatment and discharge system, in concert with the groundwater flow barrier, will be operated in a manner to maintain a target groundwater elevation difference across the barrier wall of one foot (i.e., groundwater levels within the flow barrier one foot below surrounding groundwater outside the barrier wall) at the nine shallow piezometer pairs. This is referred to as the "target gradient condition".

If performance monitoring indicates that the differential between surrounding groundwater and groundwater inside the groundwater flow barrier is not maintained for some or all of the shallow piezometer pairs at a minimum inward gradient of 0.5 foot head differential, contingent actions will be initiated. An inward hydraulic gradient of less than 0.5 foot at one or more shallow piezometer pairs is defined as a "reduced gradient condition". The sequence and timing of contingent actions and notifications to be implemented in response to observation of a reduced gradient condition are described in Figure C-1. As noted therein, the MDEQ will be provided with status reports via e-mail on a biweekly basis for the duration of the reduced gradient condition. The frequency of water level measurements will also be increased from monthly to weekly at all 18 shallow piezometer locations until a differential gradient of >0.5 feet is observed at all locations for 4 consecutive weeks, after which monitoring of the system will return to monthly.

Initial contingent actions taken in response to a reduced gradient condition will consist of verification of the measurement through additional static water level measurements within one week of the event. If a reduced gradient condition is confirmed, subsequent actions will focus on assessment of the functionality of instruments (e.g., pumps and process logic controllers), to verify that they are functioning properly. If necessary, a review of the system wells (i.e., extraction wells and piezometers) will then be conducted to assure the wells are not fouled. If the system instruments, pumps, controls and wells are determined to be in good working order, subsequent response steps may include adjustment of level set points in the groundwater extraction wells to increase groundwater extraction rates.

If, despite these measures, a minimum 0.1 foot groundwater elevation differential cannot be maintained, additional investigation/evaluation will be implemented in an effort to determine why the groundwater elevation differential cannot be maintained. As described in Figure C-1, the timing, necessity, and nature of additional contingent actions in response to a persistent reduced gradient condition will depend on identification of the root cause or causes of the condition.

Also, as noted in Figure C-1, repeated seasonal occurrences (i.e, 2 consecutive years) of <0.1 foot gradient difference that extend more than 51 days will be evaluated and, if warranted, addressed via modifications to the Hydraulic Containment System regardless of whether return to compliance is achieved within 93 days.

An alternate ground water elevation differential target or other performance benchmark may also be proposed at any time in the contingency process if deemed appropriate and equally protective to the original performance benchmarks.

Pfizer, Inc.
Holland, Michigan

PERFORMANCE MONITORING PLAN CONTINGENCY FLOW CHART

FIGURE:
C-1
DECEMBER 2014
PFZ01161FC01B

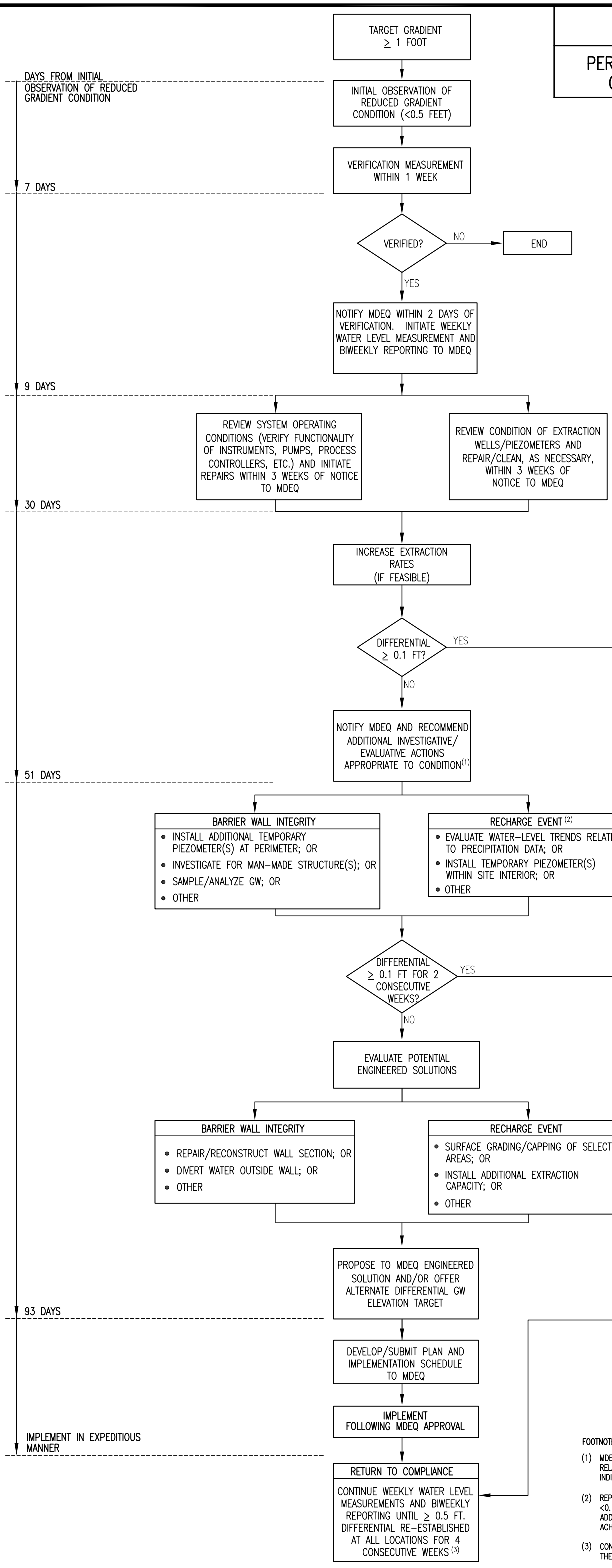

FOOTNOTES:

(1) MDEQ MAY BE PETITIONED FOR TIME EXTENSION IN THE EVENT THAT REDUCED GRADIENT IS RELATED TO SIGNIFICANT CLIMATOLOGICAL EVENT AND GROUND WATER ELEVATION TRENDS INDICATE MEANINGFUL PROGRESS TOWARDS RE-ESTABLISHMENT OF A ≥ 0.1 FOOT DIFFERENTIAL.

(2) REPEATED SEASONAL OCCURRENCES (I.E. 2 CONSECUTIVE YEARS) OF GRADIENT DIFFERENCES OF <0.1 FOOT THAT EXTEND MORE THAN 51 DAYS WILL BE EVALUATED AND, IF WARRANTED, ADDRESSED VIA MODIFICATION OF HCS REGARDLESS OF WHETHER RETURN TO COMPLIANCE IS ACHIEVED WITHIN 93 DAYS.

(3) CONTINGENT ACTIVITIES, APPROPRIATE TO CONDITIONS, WILL CONTINUE IN AN EFFORT TO REACH THE TARGET GRADIENT OF ≥ 1 FOOT.

Appendix I

Inspection, Maintenance, and Ecological Protection Plan

Inspection, Maintenance and Ecological Protection Plan

for the

Warner-Lambert, LLC Plant Site and Greenbelt
Howard Avenue
Holland, Michigan

Prepared by:

Horizon Environmental
4771 – 50th Street S.E., Suite One
Grand Rapids, Michigan 49512

September 2012

HORIZON ENVIRONMENTAL

TABLE OF CONTENTS

PAGE

1.0 INTRODUCTION 1

2.0 PERIMETER FENCE 1

3.0 SHORELINE PROTECTION SYSTEMS 1
- 3.1 System Descriptions 1
  - 3.1.1 Plant Site 1
  - 3.1.2 Greenbelt 2
- 3.2 Inspection and Maintenance Procedures 2
- 3.3 Contingency Procedures 2

4.0 ENGINEERED BARRIERS 3
- 4.1 Barrier Description 3
  - 4.1.1 Plant Site 3
  - 4.1.2 Greenbelt 3
- 4.2 Inspection and Maintenance Procedures 3
- 4.3 Contingency Procedures 4
  - 4.3.1 Revegetation 4
  - 4.3.2 Regrading 4
  - 4.3.3 Cap Installation 4

5.0 ECOLOGICAL PROTECTION PROGRAM 5
- 5.1 Landscape Maintenance to Deter Wildlife 5
- 5.2 Monitoring/Inspections 5
- 5.3 Active Management 6

6.0 PROGRESS REPORTING 6

7.0 EMERGENCY PROCEDURES 6

FIGURES

1 Site Location Map
2 Plant Site Features
3 Greenbelt Features

ATTACHMENTS

A Inspection and Maintenance Log

1.0 INTRODUCTION

The purpose of this Inspection, Maintenance and Ecological Protection Plan (IMEPP) is to provide a description of the inspection and maintenance procedures associated with engineering controls at the Warner-Lambert, LLC Plant Site and Greenbelt in Holland, Michigan. These engineering controls include perimeter fencing, earthen cover and other engineered barriers, and shoreline protection systems. In addition, this plan describes site inspection and maintenance procedures to be implemented to minimize the potential for disruption of the earthen cover by wildlife. The objective of the IMEPP is to ensure the long-term integrity of the exposure controls. The general location of the Plant Site and Greenbelt is illustrated in Figure 1. Relevant features of the Plant Site and Greenbelt are illustrated in Figures 2 and 3, respectively.

2.0 PERIMETER FENCING

A six-foot tall chain link fence is present around the perimeter of the Plant Site and the upland perimeter of the Greenbelt. These fences will be inspected on a monthly basis for signs of damage that would compromise their ability to reliably restrict access to the Plant Site or Greenbelt. Damage will be noted on the site inspection log provided in Attachment A and repaired as soon as practicable.

3.0 SHORELINE PROTECTION SYSTEMS

The primary purpose of the shoreline protection systems along the Plant Site and Greenbelt is to prevent the erosion of potentially impacted soil along the shoreline into the Macatawa River. These systems also provide the additional benefit of deterring wildlife from burrowing into the riverbank along the Plant Site and Greenbelt thus protecting burrowing wildlife from exposure to potentially impacted soil.

3.1 SYSTEM DESCRIPTIONS

The following sections provide descriptions of the shoreline protection systems along the Plant Site and Greenbelt.

3.1.1 PLANT SITE

Approximately 400 feet of the southeast (upstream) corner of the Plant Site was stabilized with a riprap revetment system in 2004 and 2006. The remainder of the shoreline along the Macatawa River (approximately 950 feet) will be stabilized in a similar manner as outlined in the 2012 PCB Remediation Plan.

Bank stabilization was accomplished by excavation along the shoreline to create a slope of 2:1. A key was then excavated at the base and top of the bank to secure the riprap in place. Geotextile fabric was installed at the base of the prepared slope and keys and a 4-inch thick layer of crushed stone was placed upon the fabric. The geotextile and stone filter were installed to

prevent water from undermining the underlying soils through voids in the riprap. The keys and bank were then stabilized with riprap with a minimum dimension of 18-inches. The area above the slope was then graded and covered with gravel over geotextile fabric or topsoil and seed.

3.1.2 GREENBELT

As depicted on Figure 3, the Greenbelt's shoreline protection system consists of riprap revetment along the Greenbelt's shoreline with the Macatawa River and a one-acre wetland. The riprap revetment system was installed in approximately 1984. Although construction details and drawings are not available, the riprap at the surface consists of dolomitic limestone with a typical dimension of 18-30 inches.

3.2 INSPECTION AND MAINTENANCE PROCEDURES

Inspections and maintenance of shoreline protection systems will be documented on an Inspection and Maintenance Log (Attachment A). The shoreline of the Plant Site and Greenbelt will be inspected on an annual basis to assess whether significant erosion is ongoing or appears likely to occur. Annual inspection of the shoreline will be completed by a certified stormwater operator for construction sites during a time when erosional forces are most prevalent. Inspections will occur when vegetation is minimal and snow cover is not present on the shoreline (i.e., in early winter or early spring). Completed inspection logs will be maintained by Pfizer.

Routine maintenance activities will include management of vegetation. Trees, shrubs, and other woody vegetation growing through the riprap will be controlled to ensure that the riprap is not displaced or damaged. The following observations will indicate the need for contingency measures described below:

- Loss of rock from the toe of the revetment; or
- Slumping of riprap revetment.

3.3 CONTINGENCY PROCEDURES

If routine maintenance of the shoreline protection systems fails to prevent erosion of underlying site materials, a licensed professional engineer will make recommendations for additional structural controls to mitigate erosion in the area and modification of the shoreline protection system. Recommendations will be implemented in a timely manner and the need for construction of additional structural controls will be reported to the Michigan Department of Environmental Quality (MDEQ). It is likely that construction of additional structural controls will require permitting by the MDEQ through the Joint Permit Application process and will be subject to seasonal restrictions. Thus, specific timelines for construction of additional structural controls, when necessary, will need to be established in consultation with the MDEQ.

4.0 ENGINEERED BARRIERS

The purpose of the earthen cover and other engineered barriers on the Plant Site and Greenbelt is to prevent the potential for direct contact (human and wildlife) and minimize loss/transport of particulate through erosional forces (wind and/or storm water runoff).

4.1 BARRIER DESCRIPTION

The following sections provide descriptions of the earthen cover and other engineered barriers on the Plant Site and Greenbelt.

4.1.1 PLANT SITE

The earthen cover on the Plant Site will consist of a minimum of four inches of clean[1], vegetated topsoil. Soils with documented PCB concentrations above Michigan's Part 201 non-residential direct contact criteria (16 ppm) will not be present at depths shallower than ten inches (25 centimeters) following completion of final grading work. Soils with documented PCB concentrations in excess of 100 ppm will not be present at depths shallower than two feet following completion of target excavation and final grading work. Building floor slabs (e.g., the deep well sheds and the groundwater treatment control building) will also serve as engineered barriers at the Plant Site.

4.1.2 GREENBELT

The existing earthen cover on the Greenbelt was installed in approximately 1984. Although construction details are not available, past investigations of the Greenbelt indicate that the Greenbelt was covered with approximately 2 feet of clean, vegetated soil when the area was transformed to a maintained greenspace.

4.2 INSPECTION AND MAINTENANCE PROCEDURES

Inspections and maintenance of earthen cover and other engineered barriers will be documented on an Inspection and Maintenance Log. Example logs are provided in Attachment A. Completed inspection logs will be maintained by Pfizer.

The condition of the earthen cover and other engineered barriers (i.e., vegetated earthen cover, building floors, asphalt/concrete pavement) will be formally inspected on a quarterly basis (Spring, Summer, Winter, and Fall). Formal inspections will be completed for any signs of damage due to frost heave, erosion, vehicle traffic, vandalism, animal activity, or other means. The following observations will indicate failure of the exposure barriers:

---

[1] "Clean" soil means that the soil is from a known source that has been documented to not contain hazardous substances at concentrations above Michigan's Part 201 residential cleanup criteria.

- Loss of vegetation and/or the earthen cover through erosion, vandalism, animal activity, or other means; or
- Cracks that are more than 0.5 inches wide or other deterioration in building floor slabs that expose (or will likely expose before the next scheduled inspection) underlying soils.

Failure of the engineered barriers will be corrected as soon as practicable after identification of the deficiency and the nature and completion of the repairs will be documented on the inspection log. Reasonable actions will be taken to correct deficiencies in the barriers within ninety (90) days of discovery of such deficiencies. In the event that correction of deficiencies cannot be completed within 90 days, a written notification will be submitted to the MDEQ regarding the nature of the deficiency, the date of deficiency discovery, and the anticipated timeline for correction of the deficiency. After completion of any subsurface work, the engineered barriers will be repaired or replaced to the original (or better) condition.

4.3 CONTINGENCY PROCEDURES

Should maintenance of the engineered barriers as described herein fail to prevent direct contact with or erosion of underlying site materials, additional measures will be implemented. These measures are described in the following subsections.

4.3.1 REVEGETATION

If areas of the vegetated earthen cover will not support vegetative growth, the exposed areas will be covered with topsoil, reseeded, mulched and watered or otherwise maintained to establish vigorous vegetative growth. Indigenous vegetation will be allowed to grow on the seeded areas, thus restoring them to prevailing conditions on the site.

4.3.2 REGRADING

If reseeding cannot mitigate erosion of the engineered barrier due to surface water and existing topography, the affected areas will be regraded to normalize runoff and thereby reduce velocities. Grading activities will be subject to the soil relocation provisions of Part 201 and related site-specific residuals management restrictions. Regraded areas will be restored with the minimum thickness of cover prescribed in Section 4.1 and reseeded as described in the preceding section.

4.3.3 CAP INSTALLATION

If the maintenance and contingency measures described herein fail to prevent direct contact with underlying materials, the area will be capped with alternate cover material which may include coarse aggregate, compacted clay, or paved surfaces.

5.0 ECOLOGICAL PROTECTION PROGRAM

The purpose of the ecological protection program is to: (1) maintain landscape at the site in a manner that deters the presence of wildlife; (2) monitors the site for the presence of wildlife that dig or use burrows; (3) remove wildlife that engages in digging or burrowing activities; and (4) restore damage caused by such activity.

An ecological investigation of the Plant Site and Greenbelt was conducted in December 2011[2]. The ecological investigation identified a list of ten mammals based on their potential to be present at the Plant Site and Greenbelt during all or part of their life history; and (2) engage in burrowing activities that could expose them to impacted soil and/or potentially relocate impacted soil to the surface for contact by other wildlife:

Common Name	Species Name	Typical Burrow Depth (Inches)
Virginia opossum	*Didelphis virginiana*	24
Eastern cottontail	*Silvilagus floridanus*	24
Eastern chipmunk	*Tamias striatus*	18
Woodchuck	*Marmota monax*	24
Northern raccoon	*Procyon lotor*	24
Striped skunk	*Mephitis mephitis*	39
American badger	*Taxidea taxus*	Unknown
Long-tailed weasel	*Mustela frenata*	24
American mink	*Neovison vison*	24
Northern river otter	*Lontra canadensis*	24

5.1 LANDSCAPE MAINTENANCE TO DETER WILDLIFE

The Plant Site and Greenbelt will be maintained in their current state through brush-hogging and mowing. Mowing and brush hogging will be conducted at a frequency necessary to prevent the establishment of woody herbaceous vegetation. These site management practices will maintain artificially poor habitat which will minimize the potential for wildlife inhabitation.

5.2 MONITORING/INSPECTIONS

Inspections of the shoreline protection systems (Section 3.2) and engineered barriers (Section 4.2) on the Plant Site and Greenbelt will include inspections for evidence of animal activity such as burrowing that could potentially expose the burrowing wildlife to impacted soil and/or relocate impacted soil to the surface for contact by other wildlife. The results of these inspections will be documented on Inspection and Maintenance Logs maintained by Pfizer. If burrowing activity is observed during the inspections, active management of the burrowing animal will be implemented as described in the following section.

---

[2] Premo, Dean. 2012. Ecological Investigation supporting an Ecological Risk and Protection Plan for Capped and Contained Contaminated Soil at a Closed Facility in Ottawa County, Michigan. White Water Associates, Inc.

5.3 ACTIVE MANAGEMENT

If burrowing activity is observed during inspections of the shoreline protection systems and barrier systems, the animal(s) will be captured and removed or otherwise deterred from inhabiting the site. The burrow will then be filled to deter other animals from inhabiting the burrow. Restoration of the engineered barrier will be as described in Section 4.0.

6.0 PROGRESS REPORTING

Documentation of the routine inspections outlined above (along with a description of maintenance or contingency activities implemented, if applicable) will be forwarded to the Pfizer project manager (see contact information below) for inclusion in the RCRA Corrective Action Progress Report that is prepared and submitted to the MDEQ pursuant to the facility's Post-Closure Plan.

7.0 EMERGENCY PROCEDURES

In the event of an emergency, such as catastrophic failure (i.e., severe erosion) of the shoreline protection system or the engineered barriers, immediate actions will be taken to minimize erosion and direct contact until contingency actions (Sections 3.3 and 4.3) can be implemented. In the case of an emergency related to the shoreline protection system or the engineered barrier, the emergency contact for the site is Tom Donohue, Senior Manager, Pfizer Global Engineering, 100 Route 206 North, Peapack, New Jersey 07977 (908-901-7395).

FIGURES

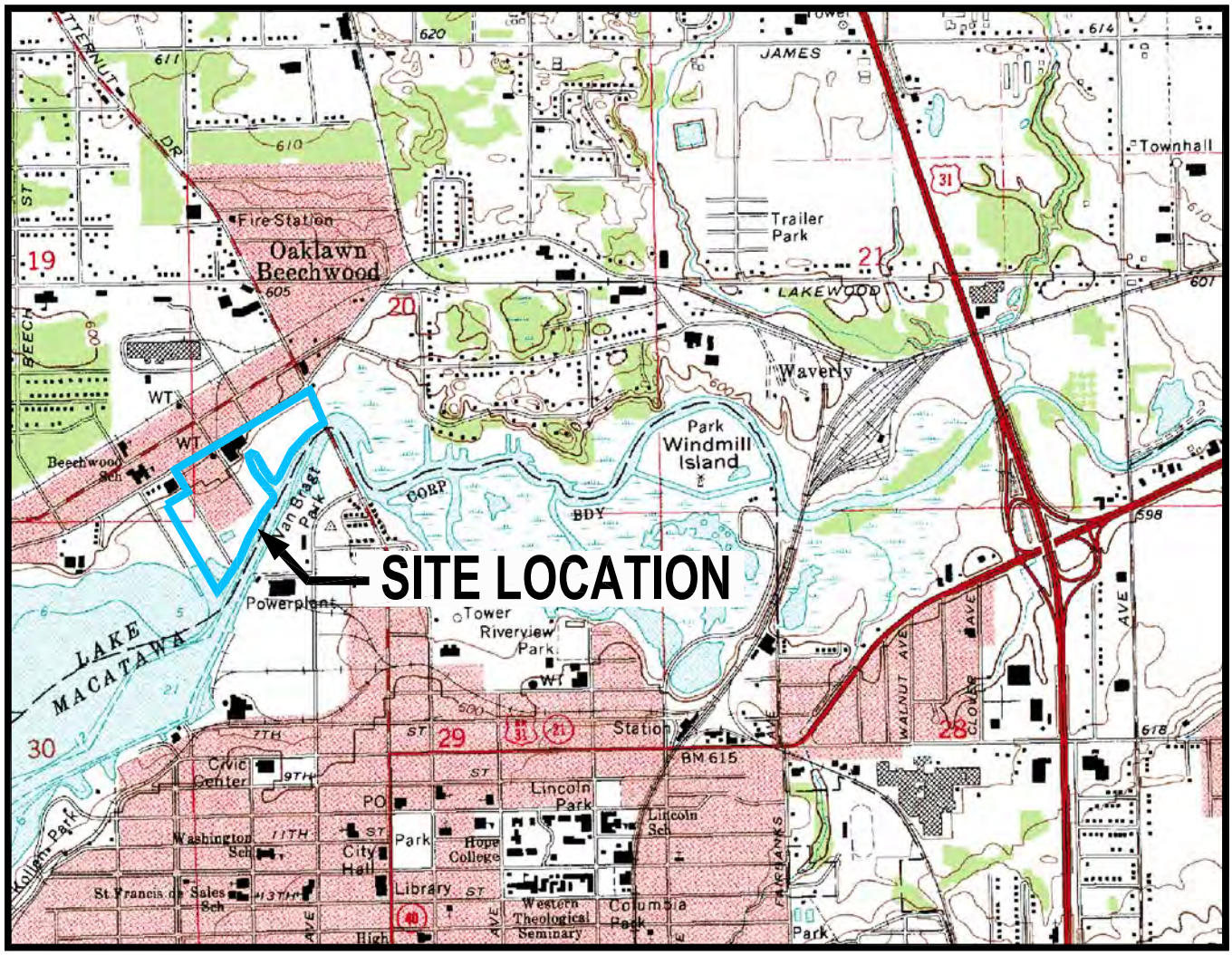

TAKEN FROM 7.5 MINUTE SERIES TOPOGRAPHIC MAP
HOLLAND WEST QUADRANGLE
SCALE = 1:24,000

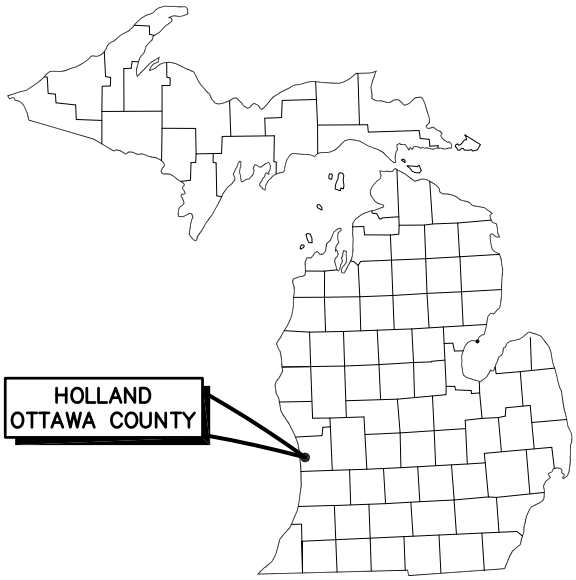

NORTH

HORIZON ENVIRONMENTAL

PROJECT NUMBER:
PFZ-01147

WARNER LAMBERT
HOLLAND, MICHIGAN

SITE LOCATION MAP

FIGURE:
1

MARCH 2012

PFZ01147F04IMP

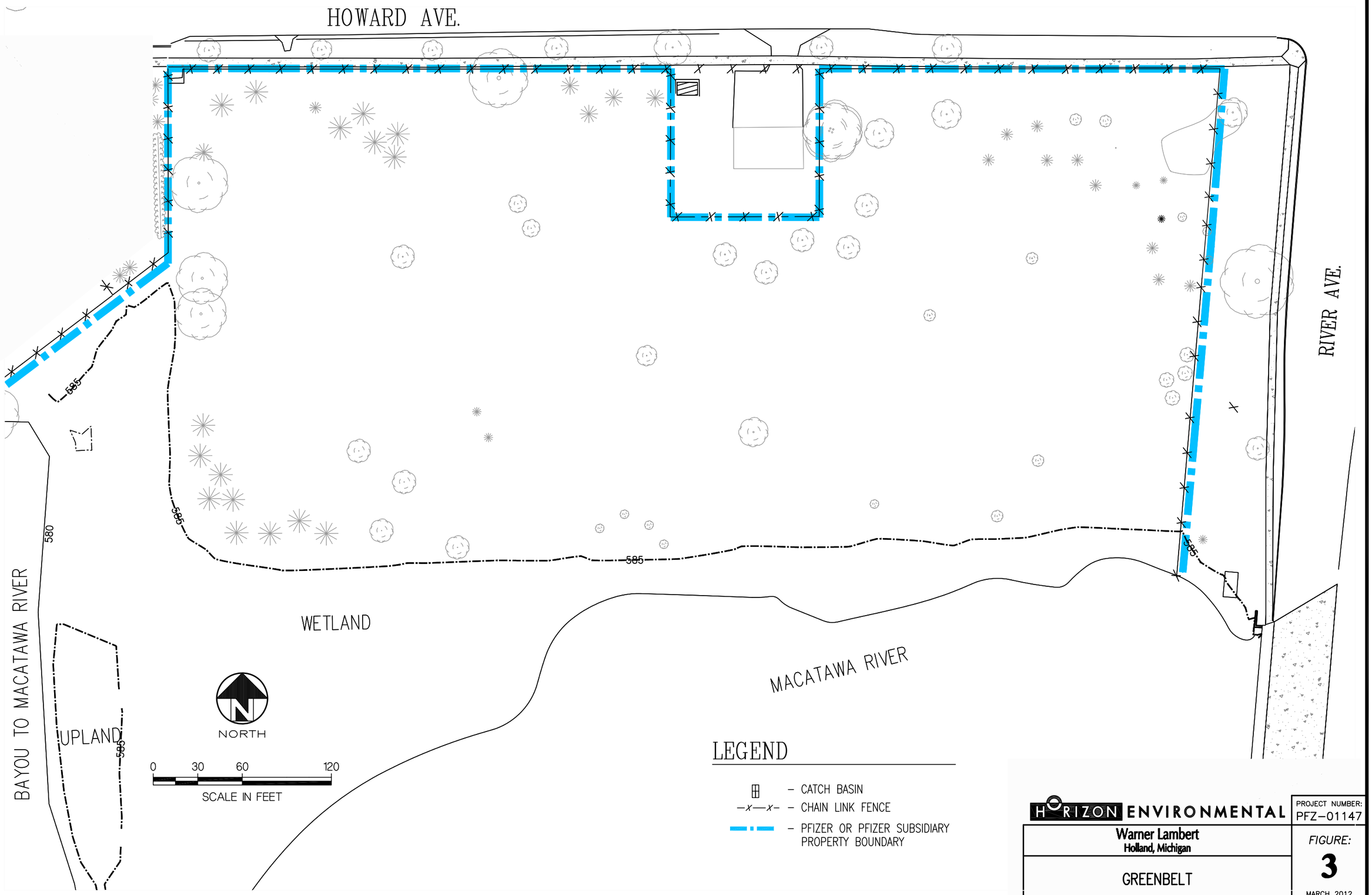

HORIZON ENVIRONMENTAL

PROJECT NUMBER: PFZ–01147

Warner Lambert
Holland, Michigan

GREENBELT

FIGURE: **3**

MARCH 2012

J:\Lvanprooyen\DWGS\PFZ\01147\PFZ01147F04IMP.dwg, 9/11/2012 2:04:46 PM

ATTACHMENT A

INSPECTION AND MAINTENANCE LOG

INSPECTION AND MAINTENANCE LOG
Warner-Lambert, LLC Plant Site and Greenbelt
Holland, Michigan

This form is to be used to document inspection and maintenance of the integrity of perimeter fencing, shoreline protection systems, and earthen cover at the Plant Site and Greenbelt.

(1) Perimeter fencing shall be inspected on a monthly basis for signs of damage or compromise.

(2) The shoreline protection system shall be inspected annually in the spring (after the winter thaw). Routine maintenance activities include management of vegetation. Trees, shrubs, and other woody vegetation growing through the riprap will be controlled to ensure that the riprap is not displaced or damaged. The following observations indicate failure of the shoreline protection systems: (a) loss of rock from the toe of the revetment; and (b) slumping of riprap revetment.

(3) Earthen cover and building floors shall be inspected on a quarterly basis (Spring, Summer, Winter, and Fall) to document that these engineered barriers continue to prevent direct contact of humans and wildlife with underlying soils). The following observations will indicate failure of the earthen cover as an engineering control: (a) loss of vegetation and/or the soil cover through erosion, vandalism, animal activity, or other means; or (b) cracks that are more than 0.5 inches wide or other deterioration in concrete or other impervious cover that exposes (or will likely expose before the next scheduled inspection) underlying soils.

(4) Herbaceous vegetation shall be inspected four times per year (March, June, August, and November) and, if not at or below knee level, will be mowed/brush hogged to remove shrubs and other woody herbaceous vegetation to maintain poor habitat for burrowing animals.

Maintenance needs must be recorded on this log, which will be maintained by Pfizer, and repaired as soon as practicable.

Date	Inspector	Condition	Description of Needed Repairs	Date Repairs Completed

Date	Inspector	Condition	Description of Needed Repairs	Date Repairs Completed

Appendix J

Worker Health & Safety/Residual Management Plans

Health, Safety and Residual Management Requirements

for

Excavation and Subsurface Construction Work

at the

Warner-Lambert Company LLC Property
Former Plant Site and Greenbelt
188 Howard Avenue
Holland, Michigan

Prepared for:

Pfizer Inc.
100 Route 206 North
Peapack, New Jersey 07977

Prepared by:

Horizon Environmental
4771 – 50th Street, SE, Suite One
Grand Rapids, Michigan 49512

September 2014

HORIZON ENVIRONMENTAL

TABLE OF CONTENTS

PAGE

QUICK REFERENCE

INTRODUCTION 1

ENVIRONMENTAL CONDITIONS 1

HEALTH & SAFETY REQUIREMENTS FOR CONTRACTORS 2
- Worker Training 2
- Personal Protective Equipment 2
- Air Monitoring and Calibration 2
- Decontamination 3

SOIL AND GROUND WATER MANAGEMENT 3
- General Requirements 3
  - Sedimentation/Erosion Control 3
  - Vehicle Track Out 3
  - Dust Control 4
- Soil Excavation and Stockpiling 4
- Soil Management and Disposal Options 5
  - Returning Soil to Excavation 5
  - Off-Site Disposal 5
- Water Management and Disposal Options 6

RESTORATION 6

DOCUMENTATION 6

PFIZER SITE CONTACT INFORMATION 7

FIGURES

1 Property Designations
2 VOC Distribution in Soil
3 VOC Distribution in Ground Water

QUICK REFERENCE

Excavation/Subsurface Construction Requirements

Warner-Lambert Company LLC Property
Former Plant Site and Greenbelt
188 Howard Avenue, Holland, Michigan

APPLICABILITY: These requirements apply to all work conducted at depths greater than 1 foot below the existing ground surface on the former Plant Site and Greenbelt Area (see Figure 1). There is a geomembrane liner system consisting of a 40-mil HDPE liner covered with a geotextile fabric installed at a nominal depth of 1 foot below existing ground surface over substantially all of the former Plant Site (see Figure 2 for limit). The liner system and cover must be restored at the conclusion of all invasive work.

HEALTH & SAFETY:

- Prepare a job-specific worker health & safety plan that complies with the master health and safety compilation contained in the Due Care Plan located in Building #91 and submit to Pfizer for review prior to work.
- Soil and ground water contamination is highly variable across the site and with depth. The Due Care Plan contains comprehensive soil and ground water data summaries for the site.
- Health & safety procedures will depend on the nature of the work contemplated and the documented conditions within the area in which the work will be performed.
- Use HAZWOPER-trained workers.

SOIL EXCAVATION / REMOVAL:

- Prepare a job-specific residuals management plan that complies with the master Residuals Management Plan contained in the Due Care Plan located in Building #91 and submit to Pfizer for review prior to work.
- DO NOT excavate in the “NO DIG AREA” shown on Figure 2.
- Implement proper sedimentation, soil erosion, vehicle track-out prevention, and dust control techniques during all excavation and soil management work.
- DO NOT dispose soil off-site without proper characterization.
- DO NOT relocate soil generated from depths > 1 foot to the surface of the property.

WATER MANAGEMENT:

- Prepare a job-specific residuals management plan that complies with the facility’s master Residuals Management Plan maintained in Building #91 and submit it to Pfizer for review prior to work.
- Minimize amount of water collected during excavation work.
- DO NOT discharge dewatering fluids to the ground outside of work area or to surface water.
- Pump into temporary poly or “frac” tank, if necessary.
- Return water to excavation after work is completed, if possible.

PFIZER CONTACT:

Tom Donohue
Pfizer Global Engineering
Phone: 908-901-7395
Email: thomas.donohue@pfizer.com

INTRODUCTION

The health, safety and residual management requirements described in this document apply to excavation and subsurface construction work conducted at depths of greater than (1) foot below the existing ground surface at the former Plant Site and Greenbelt Area associated with the Warner-Lambert Company LLC property located at 188 Howard Avenue in Holland, Michigan ("the Property"). The boundaries of the former Plant Site and Greenbelt are depicted on Figure 1. There is a geomembrane liner system consisting of a 40-mil HDPE liner covered with a geotextile fabric installed at a nominal depth of 1 foot below the existing ground surface over substantially all of the former Plant Site (see Figure 2 for limits). This liner system and overlying cover must be restored at the conclusion of all invasive work.

A "*No Dig Area*" on the former Plant Site is depicted on Figure 2. Excavation and construction activities below the HDPE liner are strictly prohibited in the *No Dig Area* without prior approval from the Michigan Department of Environmental Quality ("MDEQ").

This document provides references to available information regarding subsurface environmental conditions on the former Plant Site and Greenbelt and specifies general requirements and recommendations for the protection of workers and the proper management of soil and ground water generated during excavation and subsurface construction work. A copy of this document should be provided to all contractors conducting excavation and subsurface work at depths greater than 1 foot below the existing ground surface so that they can use the referenced materials to develop job-specific worker health and safety plans and residuals management plans.

ENVIRONMENTAL CONDITIONS

Due to historical activities, soil and ground water of the former Plant Site and Greenbelt are impacted with hazardous substances at concentrations above cleanup criteria developed by the Michigan Department of Environmental Quality ("MDEQ") under Michigan's environmental remediation law (Part 201 of Public Act 451 of 1994, as amended). Details of soil and ground water sample results and locations are provided on tables and maps in the Section 7a Compliance Analysis and Due Care Plan for the Warner-Lambert Company LLC Property which is available in Building #91.

Former Plant Site

The former Plant Site was used for tannery operations for more than 50 years followed by pharmaceutical manufacturing for 56 years. Volatile organic compounds (VOCs), semi-volatile organic compounds (SVOCs), polychlorinated biphenyls (PCBs), and common metals have been detected in soil at the former Plant Site. The primary masses of VOC and SVOC-impacted soils are in the north-central portion of the Plant Site and the southwest portion of the Plant Site. The elevated VOCs are predominantly present at depths ranging from 5 to 10 feet below grade. The primary VOCs detected include benzene, chlorobenzene, ethylbenzene, xylenes, and to a lesser extent, toluene. PCBs have been detected in soil across the site, with the heaviest concentrations reported in the west-southwest portion of the former Plant Site. They are typically limited to the upper 2 to 6 feet of soils.

The "*Non-Residential PCB Impact Area"* (see Figure 2) contains PCBs at concentrations exceeding the Part 201 non-residential direct contact criterion of 16 mg/kg. PCBs have been detected at concentrations >100 mg/kg in a smaller area within the *Non-Residential PCB Soil Impact Area*. This area is referred to as "*the PCB Remediation Waste Area*" (see Figure 2). It lies within the *No Dig Area*.

Various VOCs, SVOCs, and metals are present in the uppermost ground water aquifer of the former Plant Site which lies anywhere from 5 feet below ground surface in the southern portion of the site to 15 feet in the higher, northern portion of the site. An area of light non-aqueous phase liquid ("LNAPL") has also been identified on the ground water surface in the southwest portion of the former Plant Site (see Figure 3). The LNAPL is primarily comprised of aliphatic hydrocarbons, with some aromatic compounds, including common solvents. The distribution of VOCs and LNAPL on the former Plant Site prior to installation of the barrier wall in 2010 is presented in Figure 3. The barrier wall around the former Plant Site serves to prevent off-site migration of impacted ground water. An area of observed LNAPL occurrence lies within the *No Dig Area*. Figure 3 is intended to provide a general indication of the location and magnitude of impacted ground water. VOCs are illustrated because they have the broadest distribution on the former Plant Site. Soil and ground water data summaries for the former Plant Site are contained in the Due Care Plan on file in Building #91.

Greenbelt

The Greenbelt is undeveloped and was used as a landscaped buffer for the former Plant Site. Soils in this area have evidenced much lower elevated levels of constituents than the former Plant Site. The constituents detected are commonly associated with fill materials/construction debris, including polynuclear aromatic hydrocarbons (PNAs), polychlorinated biphenyls (PCBs), and common metals. Low levels of common metals and VOCs have been detected in ground water samples on the Greenbelt. Soil and ground water data summaries for the Greenbelt are contained in the Due Care Plan on file in Building #91.

HEALTH & SAFETY REQUIREMENTS FOR CONTRACTORS

Contractors engaged in excavation/construction activities are responsible for worker health and safety and must develop a job-specific worker health and safety plan that addresses job-specific requirements and environmental conditions that may be encountered during the excavation/ construction activities. Details of soil and ground water constituent levels and locations are provided on tables and maps in the Due Care Plan on file in Building #91. A master health and safety compilation is provided as an attachment to the Due Care Plan. The compilation provides general guidance that contractors can use to develop their job-specific health & safety plan. Contractors may also refer to 29 CFR 1910.120 for information regarding Federal health and safety requirements applicable to hazardous waste sites. Additional information is also available at the Occupational Safety and Health Administration's web site at http://www.osha.gov/, the Michigan Bureau of Safety and Regulation's web site at http://www.michigan.gov/cis, and the links contained on those web pages. The job-specific worker health and safety plan must be submitted to Pfizer for review prior to the start of excavation/construction activities.

WORKER TRAINING

Workers involved in excavation and subsurface construction activities at depths greater than 1 foot below the ground surface should have completed 24 or 40 hours of Hazardous Waste Operations and Emergency Response (HAZWOPER) training pursuant to 29 CFR 1910.120 and be current on their annual eight hour HAZWOPER refresher training.

PERSONAL PROTECTIVE EQUIPMENT

The appropriate level of personal protective equipment (PPE) will depend on the job-specific activities to be completed and the environmental conditions in the job area.

AIR MONITORING AND CALIBRATION

The appropriate level of air monitoring and calibration will depend on the job-specific activities to be completed and the environmental conditions in the job area. Subsurface work in areas of the site evidencing elevated concentrations of VOCs (e.g., the southwestern portion of the site where LNAPL has been documented) will require air monitoring to determine when upgrade in personal protective equipment (PPE) may be necessary and to identify the potential for flammable/explosive conditions.

DECONTAMINATION

The appropriate level of decontamination will depend on the job-specific activities to be completed and the environmental conditions in the job area. In general, disposable PPE should be removed and disposed at the end of each work day or more frequently as needed. Workers should shower and launder work clothes after each work day.

SOIL AND GROUND WATER MANAGEMENT

Contractors are responsible for the proper management of soil and water residuals generated during excavation/construction activities and must develop a job-specific residuals management plan that addresses job-specific requirements and environmental conditions that may be encountered during the excavation/ construction activities. Details of soil and ground water constituents levels and locations are provided on tables and maps in the Due Care Plan on file in Building #91. A master residuals management plan is also provided as an attachment to the Due Care Plan. Contractors should refer to the Due Care Plan, Section 324.20120c of Michigan's 1994 PA 451 Part 201, as well as applicable solid and hazardous waste management law and regulation (Parts 111/115, Resource Conservation and Recovery Act (RCRA) when developing job-specific plans for the management of impacted soil and ground water from the former Plant Site and Greenbelt.

The job-specific residuals management plan must be submitted to Pfizer for review prior to the start of excavation/construction activities. As previously stated, a "No Dig Area" on the former Plant Site is depicted on Figure 2. Excavation and construction activities below the HDPE liner are strictly prohibited in the "No Dig Area" without prior approval from the MDEQ.

GENERAL REQUIREMENTS

In general, the following measures should be implemented during excavation and subsurface construction on the former Plant Site and Greenbelt. Additional controls may be required in more heavily impacted areas of the former Plant Site.

Sedimentation/Erosion Control Permit

Soil excavation and management should be conducted in accordance with Part 91 (Soil Erosion and Sedimentation Control), and all other applicable regulatory frameworks, including the requirements of Parts 31 (Floodplains), 301 (Inland Lakes and Streams) and 303 (Wetlands) of Act 451. If necessary, permits should be obtained from MDEQ, the U.S. Army Corps of Engineers, and/or Ottawa County for planned cut/fill activities.

Vehicle Track-Out

Measures should be taken to minimize the potential for vehicle track-out of impacted soil from the former Plant Site and Greenbelt. These could include construction of temporary haul roads and/or wheel cleaning stations.

Dust Control

The dust level at the site should be controlled during excavation/construction activities. Dust control techniques should be implemented, if necessary, during excavation and for as long as disrupted soil is present in the precaution area. These techniques may include the use of light water spray during dry periods to maintain the surface in a moist condition, use of dust palliatives, and limiting fall distance when moving impacted soils.

SOIL EXCAVATION AND STOCKPILING

These excavation and stockpiling precautions apply to soil excavated from below the HDPE liner on the former Plant Site and Greenbelt. Impacted soil to be stockpiled should be placed on and covered with plastic sheeting to prevent contact with precipitation, erosion and possible constituent migration. The use of additional erosion control measures may be required.

Impacted soil destined for off-site disposal may be temporarily managed on-site prior to transportation off-site (while characterization and landfill disposal approval are obtained) as described above or placed directly into transportation containers (e.g., rolloff boxes). Each rolloff box should be covered with a tarp.

SOIL MANAGEMENT AND DISPOSAL OPTIONS

Soil excavated from below the HDPE liner on the former Plant Site and Greenbelt may not be freely relocated. These soils may be: (1) returned to the excavation; (2) relocated to other similarly impacted and secured portions of the site subject to the limitations specified below; or (3) disposed off-site.

Returning Soil to Excavation

Following completion of the subsurface work activities, the excavated soil may be returned to the excavation provided that it does not evidence free phase product or contain visibly apparent waste-like material. If generated from locations below the HDPE liner, it must be returned to depths below the liner and the liner restored (see below). If generated from depths greater than 1 foot on the Greenbelt, it may be relocated to depths greater than one foot and covered with clean fill materials. Soil that will be returned to the excavation does not require characterization.

On-Site Relocation

Soils generated from depths greater than 1 foot below the existing ground surface from either the Greenbelt or the Plant Site may be relocated on-site provided that they do not evidence free phase product or contain visibly apparent waste-like material. Relocation must be conducted in manner that is consistent with the soil relocation requirements specified in Section 324.20120c of Michigan's 1994 PA 451 Part 201, as amended and applicable solid and hazardous waste laws. In general, relocation must occur to an area of similarly impacted soil within the facility boundary and must be accomplished in a manner that assures that the soils are subject to the same degree of control as in their original location (i.e., relocation may not create a new or increased risk). In general, this means that soils: (1) should NOT be relocated from the former Plant Site to the Greenbelt; (2) should ALWAYS be relocated to depths greater than 1 foot below ground surface and the original cover restored (either HPDE liner/clean cover on the former Plant Site or at least 1 foot of clean fill in the case of the Greenbelt Area); (3) generated from the *Non-Residential PCB Soil Impact Area* should NOT be relocated outside of the boundary of that area; and (4) should NOT be excavated from or relocated to the *No Dig Area*.

Off-Site Disposal

Excavated soil may be disposed off-site if it cannot be returned to the excavation or securely relocated. The soil must go to a controlled site (i.e. landfill) and must be properly characterized prior to off-site disposal to assure that it is managed in accordance with applicable state and federal regulations.

With guidance from the Pfizer Site Contact or his/her designee, the Contractor will be responsible for soil characterization, including soil sampling and analysis activities, and for obtaining landfill disposal approval. For planned excavation activities on the former Plant Site and Greenbelt, the Pfizer Site Contact should be contacted at least 45 days prior to start of work to allow for coordination of sample collection, laboratory analysis, and landfill approval. For unplanned excavation activities, the Pfizer Site Contact should be contacted as soon as possible, the goal being to complete the required characterization and obtain landfill approval so as to minimize disruptions of the excavation project. To the extent possible, soil should be pre-characterized and landfill disposal approval obtained prior to beginning excavation.

Pfizer will use knowledge of the source of impact, existing soil data, and additional data (as necessary) to characterize impacted soil on the former Plant Site and Greenbelt as required for landfill approval and compliance with state and federal solid waste laws. The Contractor will prepare the waste profile for the selected landfill for Pfizer's review and signature. Pfizer will

submit the completed waste profile (and supporting information) for landfill review and approval. Pfizer will address any review comments and secure disposal approval.

WATER MANAGEMENT AND DISPOSAL OPTIONS

Ground water or accumulated rain water from an excavation on the former Plant Site or Greenbelt cannot be discharged onto the ground surface or to surface water, but it can be returned to the excavation from which it was removed or managed off-site as described below provided that it does not contain non-aqueous (free phase) liquids.

Excavation and subsurface construction activities should be performed in a manner that reduces the volume of ground water collected and requiring management. Examples include minimizing the time that the excavation remains open and avoiding excavation during or prior to heavy rain events. Accumulated water can be removed from the excavation by pumping it into a temporary water storage tank (e.g., 1,000-gallon portable poly tank or larger "frac" tank). Water can be temporarily stored in this manner until completion of the subsurface construction activity or to allow for characterization of the water. If the accumulated water from the precaution area does not contain a separate non-aqueous phase, then it may be: (1) discharged back into the excavation at the completion of the subsurface construction and before the excavation is filled with soil; or (2) disposed off-site in accordance with applicable law and regulation after proper characterization. If the accumulated water exhibits a separate, no aqueous phase, then it must be disposed off-site.

RESTORATION

Following completion of subsurface work activities on the former Plant Site and Greenbelt, the excavation must be backfilled with structural fill soil that is compacted to prevent settling and the area re-seeded to re-establish vegetative cover consistent with the existing cover.

If subsurface work has penetrated or disrupted the liner system on the former Plant Site, it must be repaired in accordance with the specifications provided in the *Site Cap Construction & Shoreline Stabilization 100% Design Report* (Golder Associates Inc., dated June 6, 2014) which is maintained in Building #91. The HDPE liner must then be covered with 8 inches of sand and 4 inches of topsoil to match the surrounding grade and re-seeded to assure continuity in the vegetative cover.

DOCUMENTATION

All documentation pertaining to the management and disposal of soil and ground water residuals from the former Plant Site or Greenbelt must be provided to the Pfizer site contact or his/her designee. This documentation must include identification of the work area, supporting characterization data/information, and relevant landfill waste profile/disposal approval or treatment/discharge approval, and quantity of soil/water disposed (landfill weigh tickets, water discharge volumes, etc.). This documentation will be maintained in Building #91.

PFIZER SITE CONTACT INFORMATION

The following person may be contacted for technical assistance should additional information be needed regarding site conditions and/or application of these requirements.

Thomas Donohue
Pfizer Global Engineering
Phone: 908-901-7395
E-mail: thomas.donohue@pfizer.com.

FIGURES

J:\Lvanprooyen\DWGS\PFZ\01161\PFZ01161F10.dwg, 9/19/2014 11:29:57 AM

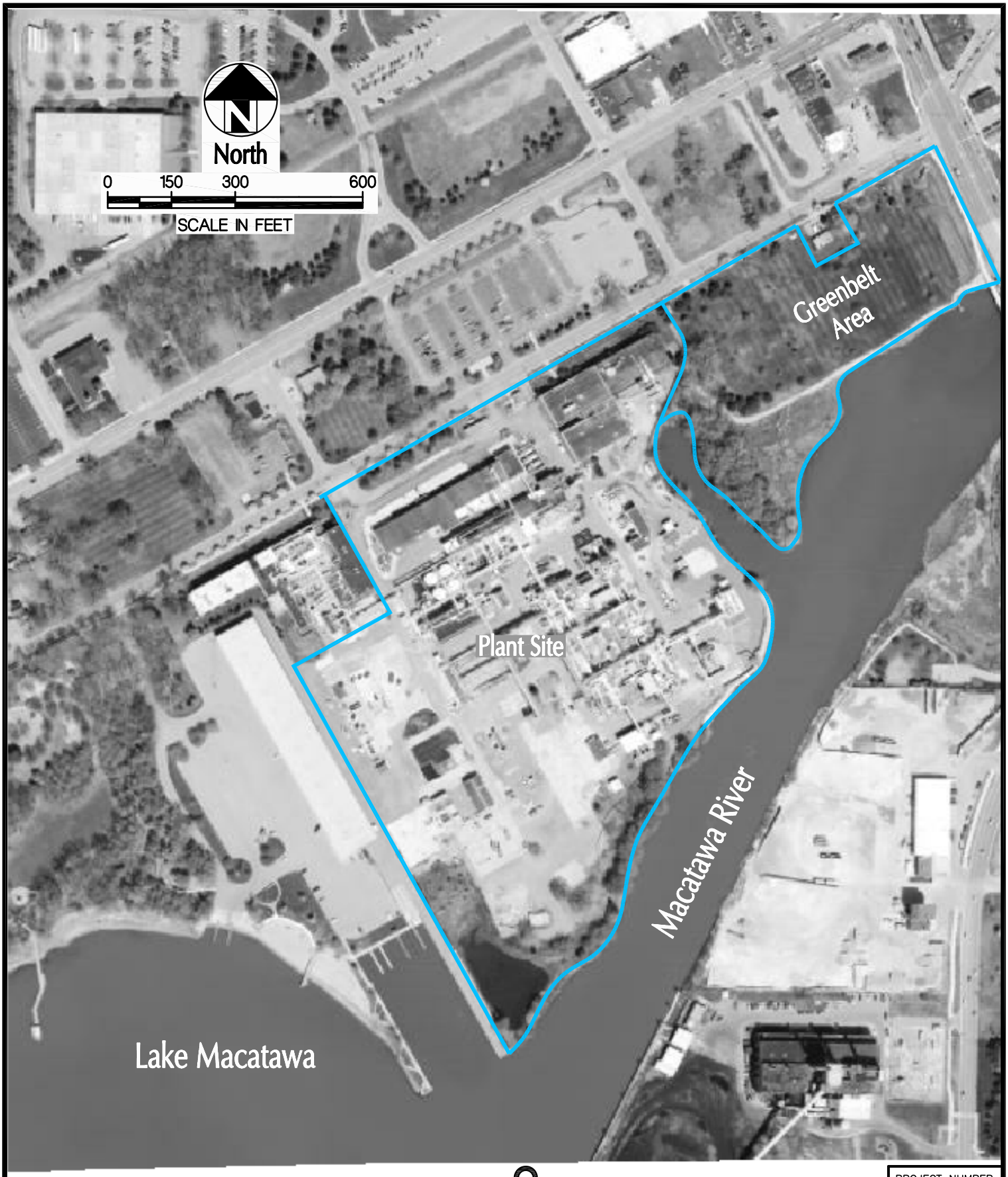

HORIZON ENVIRONMENTAL

PROJECT NUMBER: PFZ-01161

Warner Lambert
Holland, Michigan

FIGURE: 1

PROPERTY DESIGNATIONS

SEPTEMBER 2014

PFZ01161F09

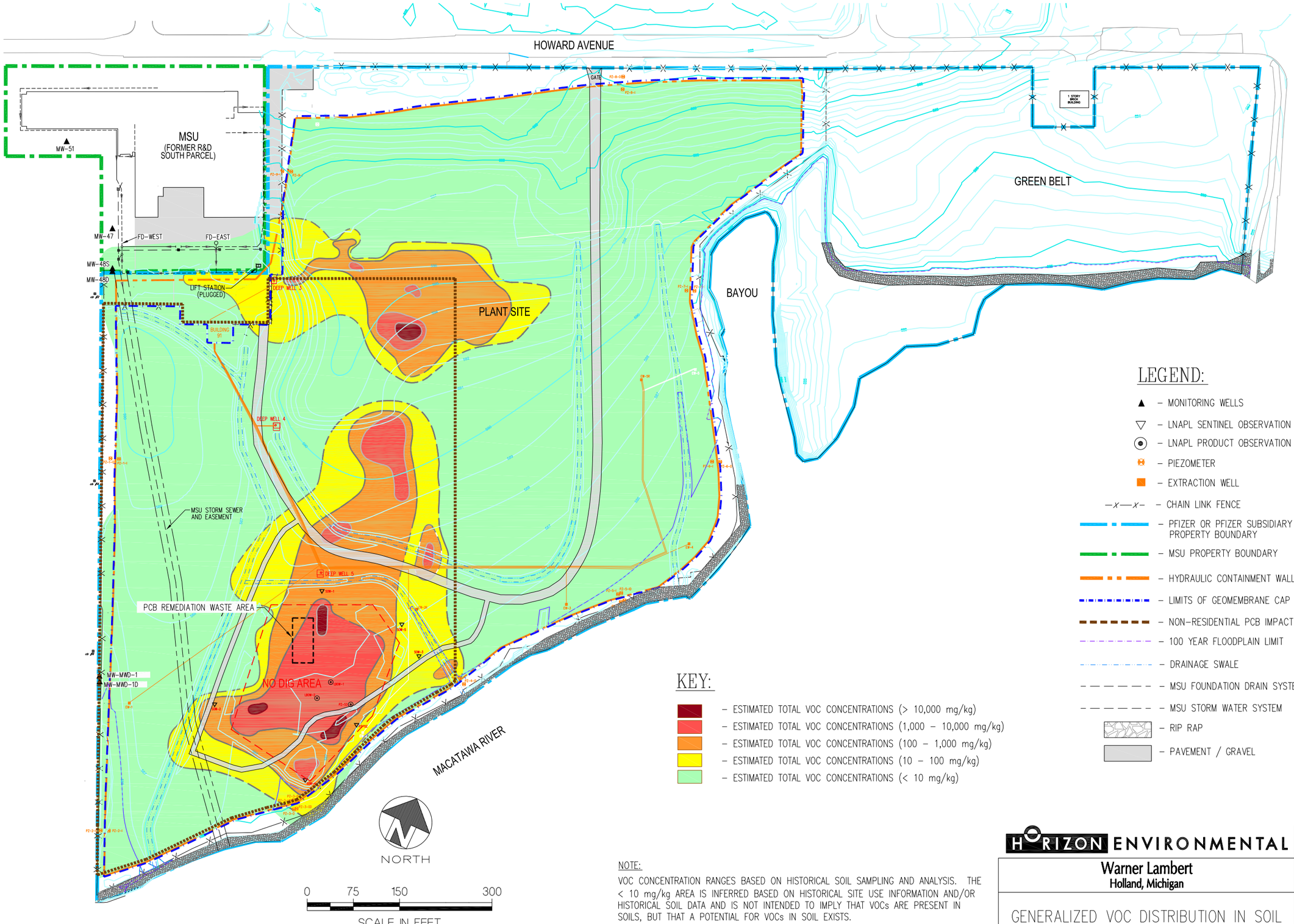

NOTE:

VOC CONCENTRATION RANGES BASED ON HISTORICAL SOIL SAMPLING AND ANALYSIS. THE < 10 mg/kg AREA IS INFERRED BASED ON HISTORICAL SITE USE INFORMATION AND/OR HISTORICAL SOIL DATA AND IS NOT INTENDED TO IMPLY THAT VOCs ARE PRESENT IN SOILS, BUT THAT A POTENTIAL FOR VOCs IN SOIL EXISTS.

HORIZON ENVIRONMENTAL

Warner Lambert
Holland, Michigan

GENERALIZED VOC DISTRIBUTION IN SOIL

PROJECT NUMBER:
PFZ–01161

FIGURE:
2

SEPTEMBER 2014

J:\Lvanprooyen\DWGS\PFZ\01161\PFZ01161F09.dwg, 9/25/2014 10:44:07 AM

PFZ01161F08

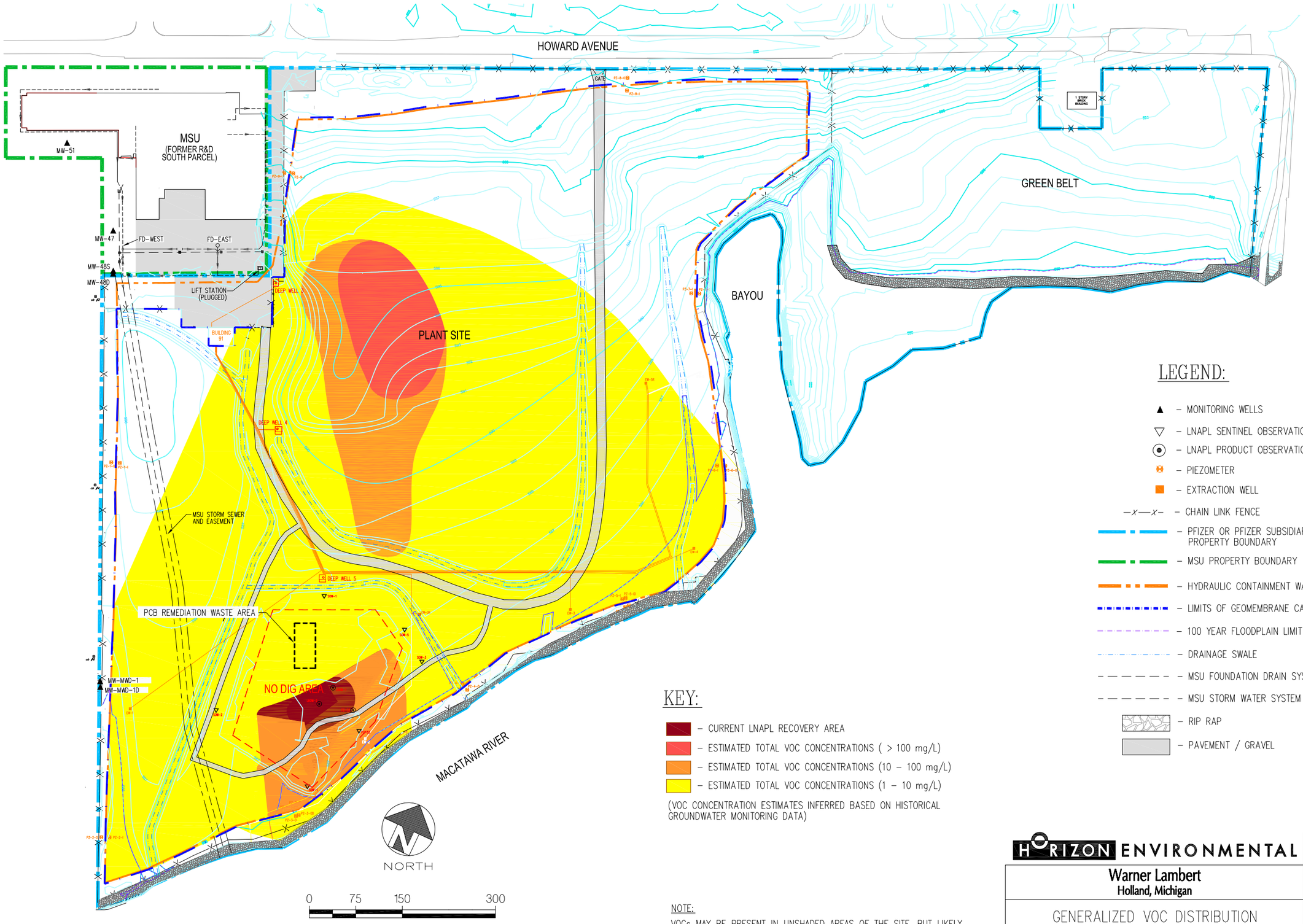

NOTE:

VOCs MAY BE PRESENT IN UNSHADED AREAS OF THE SITE, BUT LIKELY AT RELATIVELY LOWER CONCENTRATIONS.

HORIZON ENVIRONMENTAL

PROJECT NUMBER: PFZ–01161

Warner Lambert
Holland, Michigan

GENERALIZED VOC DISTRIBUTION IN GROUNDWATER – PRE–BARRIER WALL

FIGURE: **3**

SEPTEMBER 2014

J:\Lvanprooyen\DWGS\PFZ\01161\PFZ01161F08.dwg, 9/25/2014 10:41:19 AM

Recommended Health, Safety and Residual Management Precautions
for
Excavation and Subsurface Construction Work
at
Macatawa Warehouse Development Property
242 Howard Avenue
Holland, Michigan 49424

Prepared for:

Macatawa Warehouse Development
260 Howard Avenue
Holland, Michigan 49424

Prepared by:

Horizon Environmental
4771 – 50th Street, SE, Suite One
Grand Rapids, Michigan 49512

June 2014

HORIZON ENVIRONMENTAL

TABLE OF CONTENTS

PAGE

QUICK REFERENCE

INTRODUCTION 1

ENVIRONMENTAL CONDITIONS 1

HEALTH & SAFETY PRECAUTIONS FOR CONTRACTORS 2
- Worker Training 2
- Personal Protective Equipment 2
- Air Monitoring and Calibration 2
- Decontamination 3

SOIL AND GROUNDWATER MANAGEMENT 3
- General Requirements 3
  - Sedimentation/Erosion Control 3
  - Vehicle Track Out 3
  - Dust Control 3
- Soil Excavation and Stockpiling 4
- Soil Management and Disposal Options 4
  - Returning Soil Excavation 4
  - Off-Site Disposal 4
- Water Management and Disposal Options 5

DOCUMENTATION 5

CONTACT INFORMATION 5

FIGURES

1 Site location
2 Sample Location Map
3 Map Showing Precaution Area

TABLES

1 Summary of Soil Analytical Results
2 Summary of Groundwater Analytical Results

QUICK REFERENCE

Excavation/Subsurface Construction Precautions

Macatawa Warehouse Development

PRECAUTIONS APPLY to work 3' or more below ground surface (bgs) in precaution area (see map).

HEALTH & SAFETY:

- Use HAZWOPER-trained workers.
- Use Level D PPE.
- Monitor air and stop work if readings are >1 ppm VOCs, >10% LEL, <19.5% or >23% oxygen.
- Decontaminate daily.
- In case of emergency, call 911.

SOIL EXCAVATION / REMOVAL:

- DO NOT relocate potentially impacted soil to other areas of the property.

TEMPORARY

- Segregate 0-3' unimpacted soil from >3' bgs potentially impacted soil.
- Minimize dust, runoff, and vehicle track out from work area.
- Return potentially impacted soil to >3' bgs and unimpacted soil to 0-3' bgs.
- Protect stockpiles from wind and water erosion.

PERMANENT

- Contact Pfizer at least 45 days prior to work (if possible) for off-site disposal guidance.
- Segregate 0-3' unimpacted soil from >3' bgs potentially impacted soil.
- Stockpile 0-3' unimpacted soil for on-site re-use. Load >3' bgs potentially impacted soil into trucks/boxes.
- Minimize dust and vehicle track-out.

WATER MANAGEMENT:

- DO NOT discharge to the ground outside of work area or to surface water.
- Contact Pfizer at least 45 days prior to work (if possible) for possible off-site disposal guidance.
- Minimize amount of water collected.
- Pump into temporary poly or "frac" tank, if necessary.
- Return water to excavation after work completed, if possible.

PFIZER CONTACT:

Tom Donohue
Pfizer Global Engineering
Phone: 908-901-7395
Email: thomas.donohue@pfizer.com

INTRODUCTION

The purpose of this document is to provide health, safety and residual management information applicable to excavation or subsurface construction work on portions of the Macatawa Warehouse Development (MWD) property. This document summarizes available information regarding subsurface environmental conditions on the property and provides recommendations for the protection of workers and the proper management of soil and ground water generated during future excavation and subsurface construction work. The site location is depicted on Figure 1.

A copy of this document should be provided to contractors conducting excavation and subsurface work at depths below 582 feet mean sea level (i.e., approximately 3 feet below the ground surface) in the precaution area shown on Figure 3. Excavation and construction activities that occur in shallow soils (<3 feet below the ground surface) are not subject to the precautions described in this document. Examples of such shallow subsurface work include, but are not limited to, general landscaping activities (e.g., lawn care, small plantings, sprinklers), pavement maintenance, grubbing, clearing, and minor grading.

ENVIRONMENTAL CONDITIONS

Hazardous substances related to historical activities have been identified in soil and ground water on the MWD property. An interim response measure was implemented in 2003 to remove impacted soil east of the marina building. A description of this remedial work, summary of pre-remediation environmental conditions, and post-excavation verification sampling results are described in the *Remedial Completion Report for the MWD Site* (Horizon Environmental; December 31, 2003) filed with the Michigan Department of Environmental Quality (MDEQ).

As detailed in the Remedial Completion Report, residual levels of some hazardous substances remain in soil and ground water south of the marina building at concentrations above cleanup criteria developed by the Michigan Department of Environmental Quality ("MDEQ") under Michigan's environmental remediation law (Part 201 of Public Act 451 of 1994, as amended). These include: three volatile organic compounds (chlorobenzene, xylene, methylene chloride), a manufactured product (phenytoin/5,5 Diphenylhydantoin), and two metals (arsenic and mercury). Other substances have also been detected on the property, but not above relevant criteria[1]. Sample locations are depicted on Figure 2.

The detections are present at depth and unavailable for contact by routine surface users of the site. They are observed predominantly within organic clay and peat units between 6 and 10 feet below ground surface, with some isolated detections in overlying sand units 3 to 4 feet beneath the asphalt surface cover. (These soil units were removed for geotechnical reasons when the marina building was constructed and are not present beneath the building.)

None of the reported detections are above applicable generic non-residential direct contact or inhalation criteria which are protective for inhalation, dermal contact, and/or incidental ingestion for long-term exposure durations (21 years). The precautions prescribed herein, therefore, are extremely conservative given the expected intermittent nature and short duration of subsurface work.

[1] Additional information about other contaminants detected in the precaution area is provided on Tables 1 and 2 and Figure 2.

HEALTH & SAFETY PRECAUTIONS FOR CONTRACTORS

It is recommended that contractors take the precautions outlined here to protect the health and safety of their workers from environmental contaminants during excavation/construction activities at depths greater than 3 feet below the ground surface (approximately 582 feet mean sea level) in the precaution area (Figure 3). Contractors engaged in excavation/construction activities are responsible for worker health and safety and must develop their own job-specific plans using the information contained in this document as a guide only.

WORKER TRAINING

Workers involved in excavation and subsurface activities in the precaution area (Figure 3) at depths greater than 3 feet below the ground surface (approximately 582 feet mean sea level) should have completed 24 or 40 hours of Hazardous Waste Operations and Emergency Response (HAZWOPER) training pursuant to 29 CFR 1910.120 and be current on their annual eight hour HAZWOPER refresher training.

PERSONAL PROTECTIVE EQUIPMENT

"Level D" personal protective equipment (PPE) should be used for subsurface work in the precaution area (Figure 3). Level D PPE provides minimal protection that is used for nuisance contamination only. The following constitute Level D PPE for the precaution area: coveralls (or long-sleeve shirt and pants); boots/shoes with steel toe and shank; gloves; safety glasses/goggles or face shield; and hard hat.

AIR MONITORING AND CALIBRATION

Chemical exposures through the air should be monitored through direct reading instruments including:

Monitoring Instrument	Location to be Monitored	Monitoring Frequency
Photoionization Detector (PID)	Worker breathing zone when excavation is open.	Continuous.
Multiple gas meter	If worker enters excavation, then monitor worker's breathing zone for oxygen, hydrogen sulfide, and lower explosive limit.	Continuous and alarm mode.

Although general air monitoring guidance is provided below, contractors engaged in excavation/construction must develop their own job-specific air monitoring plan.

Air monitoring should be conducted in all excavation and subsurface construction work areas unless these areas have been previously characterized as posing minimal inhalation risk. Additional air monitoring may be required if the excavation and subsurface construction work creates a confined space. Confined space entry procedures must be followed if workers enter any trench greater than 4 feet deep where a hazardous atmosphere exists or could reasonably be expected to exist. Monitoring devices should be calibrated at a frequency consistent with their manufacturers' recommendations.

For volatile compound exposures, if breathing zone PID readings of 10 ppm or higher persist above background for a sustained period of 30-60 seconds or workers experience any general exposure symptoms (e.g., headache, dizziness, tingling, itchy/watery eyes), then engineering controls should be implemented in the work zone (e.g., active ventilation) to reduce breathing zone air concentrations so they are consistently less than 10 ppm above background levels.

For the combustible gas meter, if readings indicate greater than 10% of the lower explosive limit (LEL), suspend operations and leave the area taking care not to generate flames or static sparking. Actively ventilate the area and resume work only when readings are consistently less than 10% of the LEL.

For the oxygen meter, if readings indicate less than 19.5% oxygen, suspend operations and leave the area. If readings indicate greater than 23% oxygen, suspend operations (due to increased fire hazards), turn off or remove any equipment that may present a source of ignition, and leave the area. For both scenarios, actively ventilate the area and resume work when oxygen readings are consistently between 19.5% and 23%.

DECONTAMINATION

Disposable PPE should be removed and disposed at the end of each work day or more frequently as needed. Workers should shower and launder work clothes after each work day.

SOIL AND GROUNDWATER MANAGEMENT

This section is intended to provide an overview of procedures for the management of soil and ground water generated during excavation/construction activities in the precaution area (Figure 3).

GENERAL REQUIREMENTS

The following measures should be implemented during excavation in the precaution area (Figure 3).

Sedimentation/Erosion Control Permit

Soil relocation should be completed in accordance with Part 91 (Soil Erosion and Sedimentation Control), and all other applicable regulatory frameworks, including the requirements of Parts 31 (Floodplains), 301 (Inland Lakes and Streams) and 303 (Wetlands) of Act 451. If necessary, permits should be obtained from MDEQ, the U.S. Army Corps of Engineers, and/or Ottawa County for planned cut/fill activities.

Vehicle Track-Out

Measures should be taken to minimize the potential for vehicle track-out of soil from the precaution area (Figure 3).

Dust Control

The dust level at the site should be controlled during excavation/construction activities. Dust control techniques should be implemented, if necessary, during excavation and for as long as disrupted soil is

present in the precaution area (Figure 3). These techniques may include the use of light water spray during dry periods to maintain the surface in a moist condition, use of dust palliatives, and limiting fall distance when moving soils.

SOIL EXCAVATION AND STOCKPILING

These excavation and stockpiling precautions apply whenever excavation will extend to depths greater than 3 feet below ground surface (nominally 582 feet MSL) in the precaution area (Figure 3). Shallow, unimpacted soils should be segregated from deeper, potentially impacted soil. Shallow, unimpacted soil can be placed directly on the ground or hard surface (e.g., asphalt or concrete) but should be managed in a manner that prevents erosion due to wind or precipitation. Deeper, potentially impacted soils should be stockpiled separately and placed on and covered with plastic sheeting to prevent contact with precipitation, erosion and possible contaminant migration. The use of additional erosion control measures may be required.

Soils destined for off-site disposal may also be temporarily managed on-site prior to transportation off-site (while characterization and landfill disposal approval are obtained) as described above or placed directly into transportation containers (e.g., rolloff boxes). Rolloff boxes should be covered with a tarp and stockpiles covered with plastic sheeting.

SOIL MANAGEMENT AND DISPOSAL OPTIONS

Soil generated from excavations in the precaution area (Figure 3) on the property should be managed in accordance with the procedures described below.

Returning Soil to Excavation

Soil excavated from 0 to 3 feet below ground surface (i.e., above 582 feet msl) may be returned to the excavation provided that they do not exhibit any visual (staining, discoloration, etc.) or olfactory (odors) evidence of impact.

Soil generated from depths greater than 3 feet below ground surface (i.e., below 582 feet msl) may also be returned to the excavation provided that: (1) it does not evidence any visual/olfactory evidence of impact; (2) it is used to backfill the excavation only up to a depth of 3 feet below the ground surface; and (3) it is covered with unimpacted shallow soil or clean imported fill at the completion of activities to restore the existing 3 foot cover that currently exists across the site.

Soil that will be returned to the excavation does not require characterization. Excavated soil exhibiting any visual or olfactory evidence of impact or containing non-soil waste materials should be disposed at an off-site disposal facility as described below.

Off-Site Disposal

Any soil exhibiting visual or olfactory evidence of impact or other soil generated during excavation work in the precaution area (Figure 3) that cannot be accommodated as backfill in the excavation in accordance with the procedures described above should be disposed off-site. These soils must go to a controlled site (i.e. landfill) and must be properly characterized prior to off-site disposal to assure that they are managed in accordance with applicable state and federal regulations. In the event that soils within the precaution area (Figure 3) will require off-site disposal, Pfizer should be contacted at

least 45 days prior to start of work to allow for coordination of sample collection, laboratory analysis, and landfill approval.

WATER MANAGEMENT AND DISPOSAL OPTIONS

Ground water cannot be discharged onto the ground surface or to surface water, but it can be returned to the excavation from which it was removed or managed off-site as described below.

Excavation and subsurface construction activities should be performed in a manner that reduces the volume of ground water collected and requiring management. Examples include minimizing the time that the excavation remains open and avoiding excavation during or prior to heavy rain events. Accumulated water can be removed from the excavation by pumping it into a temporary water storage tank (e.g., 1,000-gallon portable poly tank or larger "frac" tank). Water can be temporarily stored in this manner until completion of the subsurface construction activity. Accumulated water may be: (1) discharged back into the excavation at the completion of the subsurface construction and before the excavation is filled with soil; or (2) disposed off-site.

Accumulated water to be returned to the excavation does not require characterization. In the event that accumulated water will require off-site management, Pfizer should be contacted at least 45 days prior to start of work to allow for coordination of sample collection, laboratory analysis, and disposal facility approval.

DOCUMENTATION

All documentation pertaining to the management and disposal of soil and ground water residuals should be maintained by the property owner. This documentation should include identification of the work area, supporting characterization data/information, and relevant landfill waste profile/disposal approval or treatment/discharge approval, and quantity of soil/water disposed (landfill weigh tickets, water discharge volumes, etc.).

CONTACT INFORMATION

The following person may be contacted for technical assistance should additional information be needed regarding site conditions and/or application of these protocols.

Thomas Donohue
Pfizer Global Engineering
Phone: 908-901-7395
E-mail: thomas.donohue@pfizer.com

PFZ01154F07

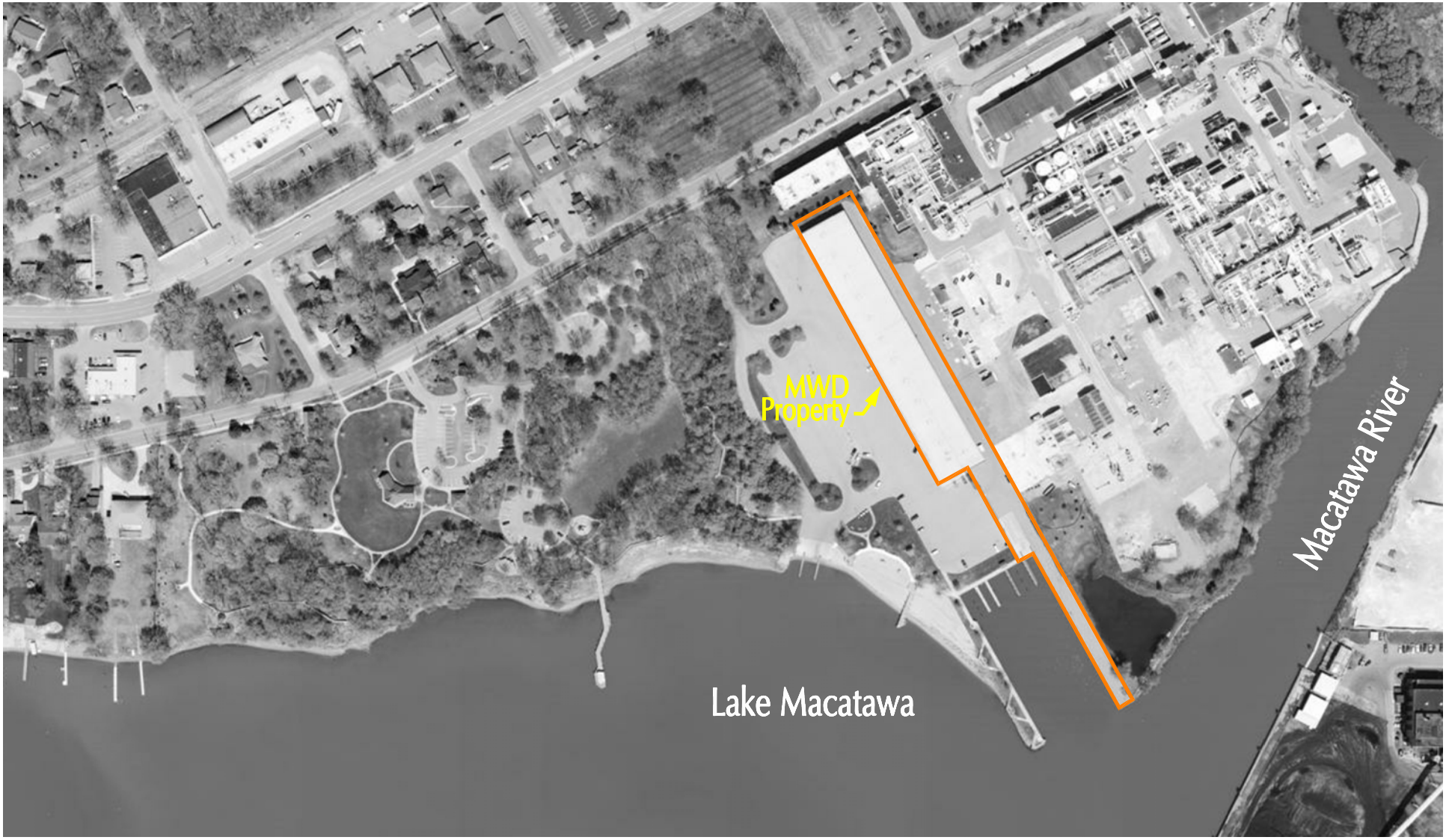

North

0 150 300 600

SCALE IN FEET

LEGEND:

– PROPERTY LINE

HORIZON ENVIRONMENTAL

PROJECT NUMBER:
PFZ–01154

Macatawa Warehouse Development Property
Holland Charter Township, Ottawa County, Michigan

SITE LOCATION

FIGURE:
1

JANUARY 2013

J:\Lvanprooyen\DWGS\PFZ\01154\PFZ01154F07.dwg, 1/24/2013 1:18:58 PM

PFZ01154F08
PFZ0148-1.ctb

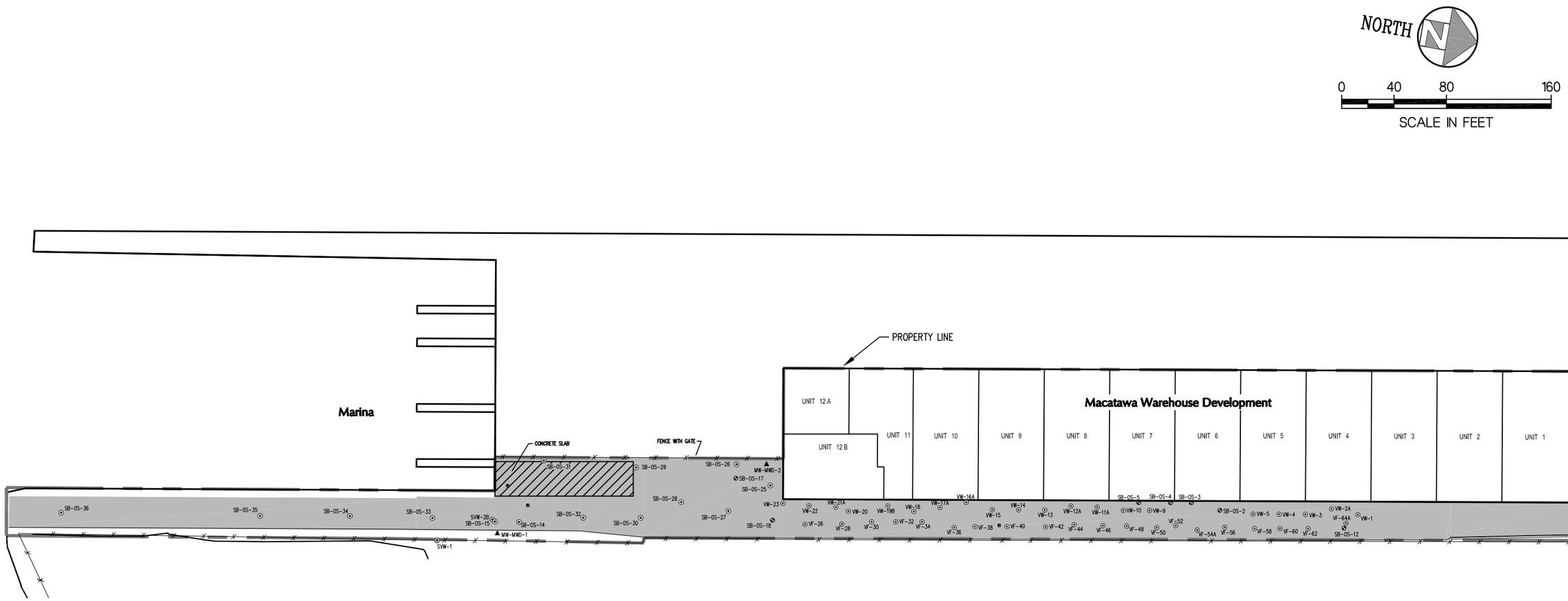

LEGEND

- SOIL BORING LOCATION (2002)
- MONITORING WELL LOCATION
- SOIL SAMPLE LOCATION
- PAVEMENT

HORIZON ENVIRONMENTAL

Macatawa Warehouse Development
Holland, Michigan

SAMPLE LOCATION MAP

PROJECT NUMBER:
PFZ-01154

FIGURE:
2

JANUARY 2013

PFZ01154F01

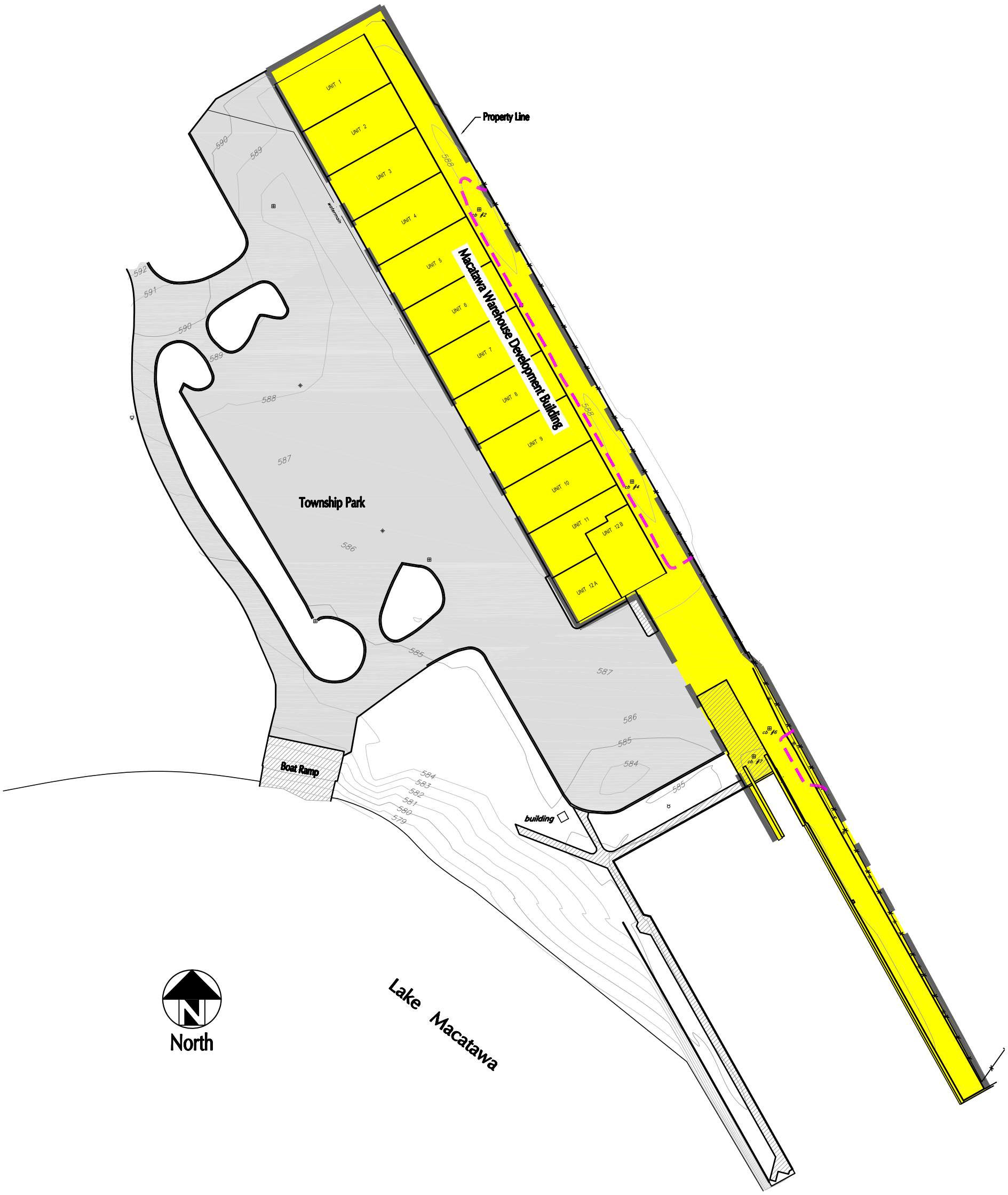

LEGEND:

- ⊞ – CATCH BASIN
- ✳ – LIGHT POLE
- – PROPERTY LINES
- – APPROXIMATE EXCAVATION LIMITS IN 2003
- – ASPHALT
- – CONCRETE
- – GRAVEL
- –x—x– – CHAIN LINK FENCE
- – HEALTH, SAFETY AND RESIDUAL MANAGEMENT PRECAUTION AREA

HORIZON ENVIRONMENTAL

PROJECT NUMBER: PFZ–01154

Macatawa Warehouse Development
Holland, Michigan

MAP SHOWING PRECAUTION AREA

FIGURE: **3**

JANUARY 2013

Table 1
Summary of Soil Analytical Results - MWD Property
Holland, Michigan

Sample Location Lab Sample ID Sampled By Analyzed By Sample Date Sample Depth (ft.)		Background Target Method Detection Limit	Non-Residential Drinking Water Protection	Groundwater Surface Water Interface Protection	Groundwater Contact Protection	Non-Residential Soil Volatilization to Indoor Air Inhalation	Non-Residential Volatile Soil Inhalation 5-Meter (2-Acre)	Non-Residential Particulate Soil Inhalation (2-Acre)	Non-Residential Direct Contact	Soil Saturation Screening Levels
Inorganics	*Units*									
Arsenic	mg/Kg	5.8	4.6	4.6	2000	NLV	NLV	700.7	37	NA
Barium {B}	mg/Kg	75	1300	760 {G,X}	1000000 {D}	NLV	NLV	115500	130000	NA
Cadmium {B}	mg/Kg	1.2	6	3 {G,X}	230000	NLV	NLV	1694	2100	NA
Chromium, Total	mg/Kg	18	1.0 E+6 {D}	3.5 E+6 {G}	1.0 E+6 {D}	NLV	NLV	1.2E+5	1.0E+6 {D}	NA
Copper {B}	mg/Kg	32	5800	110 {G}	1000000 {D}	NLV	NLV	45430	73000	NA
Lead {B}	mg/Kg	21	700	2500 {G,X}	ID	NLV	NLV	33880	900 (DD)	NA
Mercury, Total {B,Z}	mg/Kg	0.13	1.7	0.05 {M} :0.0012	47	89	47.74	6776	580	NA
Selenium {B}	mg/Kg	0.41	4	0.4	78000	NLV	NLV	45430	9600	NA
Silver {B}	mg/Kg	1	13	0.1 {M} :0.027	200000	NLV	NLV	2233	9000	NA
Zinc {B}	mg/Kg	47	5000	250 {G}	1000000 {D}	NLV	NLV	ID	630000	NA
Misc.	*Units*									
Isopropyl alcohol {I}	mg/Kg	4.4	26	1100 {X}	110000 {C}	NLV	NLV	5.0E+6	47000	110000
Methanol {I}	mg/Kg	4.4	200	3100 {C}	3100 {C}	3100 {C}	35420	7.4E+7	3100 {C}	3100
Percent Moisture	%	NA	NA	NA	NA	NA	NA	NA	NA	NA
PCB's	*Units*									
Aroclor 1016 {J,T}	ug/Kg	330	NLL	NLL	NLL	1.6E+7	2.2E+7	5.0E+6	16000 {T}	NA
Aroclor 1221 {J,T}	ug/Kg	330	NLL	NLL	NLL	1.6E+7	2.2E+7	5.0E+6	16000 {T}	NA
Aroclor 1232 {J,T}	ug/Kg	330	NLL	NLL	NLL	1.6E+7	2.2E+7	5.0E+6	16000 {T}	NA
Aroclor 1242 {J,T}	ug/Kg	330	NLL	NLL	NLL	1.6E+7	2.2E+7	5.0E+6	16000 {T}	NA
Aroclor 1248 {J,T}	ug/Kg	330	NLL	NLL	NLL	1.6E+7	2.2E+7	5.0E+6	16000 {T}	NA
Aroclor 1254 {J,T}	ug/Kg	330	NLL	NLL	NLL	1.6E+7	2.2E+7	5.0E+6	16000 {T}	NA
Aroclor 1260 {J,T}	ug/Kg	330	NLL	NLL	NLL	1.6E+7	2.2E+7	5.0E+6	16000 {T}	NA
Semi-Volatiles	*Units*									
Acenaphthene	ug/Kg	330	8.8E+5	8700	9.7E+5	3.5E+8	7.5E+7	4.8E+9	1.3E+8	NA
Acenaphthylene	ug/Kg	330	17000	ID	4.4E+5	3.0E+6	2.1E+6	7.7E+8	5.2E+6	NA
Aniline	ug/Kg	330	4400	330 {M} :80	2.8E+6	NLV	NLV	2.2E+7	1.5E+6	4.5E+6
Anthracene	ug/Kg	330	41000	ID	41000	1.0E+9 {D}	1.2E+9	2.2E+10	7.3E+8	NA
Benzo(a)anthracene {Q}	ug/Kg	330	NLL	NLL	NLL	NLV	NLV	ID	80000	NA
Benzo(a)pyrene {Q}	ug/Kg	330	NLL	NLL	NLL	NLV	NLV	1.5E+6	8000	NA
Benzo(b)fluoranthene {Q}	ug/Kg	330	NLL	NLL	NLL	ID	ID	ID	80000	NA
Benzo(g,h,i)perylene	ug/Kg	330	NLL	NLL	NLL	NLV	NLV	2.7E+8	7.0E+6	NA
Benzo(k)fluoranthene {Q}	ug/Kg	330	NLL	NLL	NLL	NLV	NLV	ID	8.0E+5	NA
Benzophenone	ug/Kg	NA	NA	NA	NA	NA	NA	NA	NA	NA
bis(2-Chloroethoxy)methane	ug/Kg	330	NA	NA	NA	NA	NA	NA	NA	NA
bis(2-Chloroethyl)ether {I}	ug/Kg	100	170	100 {M}: 20	1.1E+5	44000	1.0E+4	9.2E+6	58000	2.2E+6
bis(2-Chloroisopropyl)ether	ug/Kg	330	NA	NA	NA	NA	NA	NA	NA	NA
bis(2-Ethylhexyl)phthalate	ug/Kg	330	NLL	NLL	NLL	NLV	NLV	6.9E+8	1.0E+7 {C}	1.0E+7
4-Bromophenyl phenylether	ug/Kg	330	NA	NA	NA	NA	NA	NA	NA	NA
Butyl benzyl phthalate	ug/Kg	330	3.1E+5 {C}	1.2E+5 {X}	3.1E+5 {C}	NLV	NLV	1.6E+10	3.1E+5 {C}	3.1E+5
Carbazole	ug/Kg	330	39000	1100	8.2E+5	NLV	NLV	6.0E+7	2.4E+6	NA
4-Chloroaniline	ug/Kg	330	NA	NA	NA	NA	NA	NA	NA	NA
4-Chloro-3-methylphenol	ug/Kg	280	16000	280	3.0E+6	NLV	NLV	ID	1.5E+7	NA
beta-Chloronaphthalene	ug/Kg	330	1.8E+6	NA	2.3E+6	ID	ID	ID	1.8E+8	NA
2-Chlorophenol	ug/Kg	330	2600	360	1.9E+6	8.0E+5	8.5E+5	4.1E+8	4.5E+6	1.9E+7

Table 1
Summary of Soil Analytical Results - MWD Property
Holland, Michigan

Sample Location Lab Sample ID Sampled By Analyzed By Sample Date Sample Depth (ft.)		Background Target Method Detection Limit	Non-Residential Drinking Water Protection	Groundwater Surface Water Interface Protection	Groundwater Contact Protection	Non-Residential Soil Volatilization to Indoor Air Inhalation	Non-Residential Volatile Soil Inhalation 5-Meter (2-Acre)	Non-Residential Particulate Soil Inhalation (2-Acre)	Non-Residential Direct Contact	Soil Saturation Screening Levels
Semi-Volatiles Cont.	*Units*									
4-Chlorophenyl phenylether	ug/Kg	330	NA	NA	NA	NA	NA	NA	NA	NA
Chrysene {Q}	ug/Kg	330	NLL	NLL	NLL	ID	ID	ID	8.0E+6	NA
Dibenzo(a,h)anthracene {Q}	ug/Kg	330	NLL	NLL	NLL	NLV	NLV	ID	8000	NA
Dibenzofuran	ug/Kg	330	ID	1700	ID	3.6E+6	1.2E+5	2.2E+6	ID	NA
1,2-Dichlorobenzene	ug/Kg	100	14000	280	2.1E+5 {C}	2.1E+5 {C}	3.5E+7	3.4E+10	2.1E+5 {C}	2.1E+5
1,3-Dichlorobenzene	ug/Kg	100	480	680	51000	48000	7.2E+4	6.8E+7	1.7E+5 {C}	1.7E+5
1,4-Dichlorobenzene	ug/Kg	100	1700	360	1.4E+5	1.0E+5	2.0E+5	4.4E+8	1.9E+6	NA
3,3'-Dichlorobenzidine	ug/Kg	2000	2000 {M} :110	2000 {M} :7.4	4600	NLV	NLV	6.3E+6	30000	NA
2,4-Dichlorophenol	ug/Kg	330	4200	330 {M}: 220	9.6E+5	NLV	NLV	1.8E+9	1.8E+6 {C,DD}	1.8E+6
Diethyl phthalate	ug/Kg	330	3.2E+5	2200	7.4E+5 {C}	NLV	NLV	1.2E+9	7.4E+5 {C}	7.4E+5
Dimethyl phthalate	ug/Kg	330	7.9E+5 {C}	NA	7.9E+5 {C}	NLV	NLV	1.2E+9	7.9E+5 {C}	7.9E+5
2,4-Dimethylphenol	ug/Kg	330	20000	7600	1.0E+7	NLV	NLV	1.6E+9	3.6E+7	NA
Di-n-butyl phthalate	ug/Kg	330	7.6E+5 {C}	11000	7.6E+5 {C}	NLV	NLV	1.2E+9	7.6E+5 {C}	7.6E+5
2,4-Dinitrophenol	ug/Kg	830	NA	NA	NA	NA	NA	NA	NA	NA
2,4-Dinitrotoluene	ug/Kg	330	640	NA	1.7E+5	NLV	NLV	1.5E+7	2.2E+5	NA
2,6-Dinitrotoluene	ug/Kg	330	NA	NA	NA	NA	NA	NA	NA	NA
Di-n-octyl phthalate	ug/Kg	330	1.4E+8 {C}	ID	1.4E+8 {C}	NLV	NLV	1.1E+10	2.0E+7	1.4E+8
Dimethylformamide {I}	ug/Kg	NA	40000	NA	1.1E+8 {C}	NLV	NLV	6.8E+8	7.0E+7	1.1E+8
5,5-Diphenylhydantoin	ug/Kg	NA	3.3E+3	4300 {X}	6.8E+5	NLV	NLV	2.2E+8	4.8E+5	NA
Fluoranthene	ug/Kg	330	7.3E+5	5500	7.3E+5	1.0E+9 {D}	6.8E+8	3.2E+9	1.3E+8	NA
Fluorene	ug/Kg	330	8.9E+5	5300	8.9E+5	1.0E+9 {D}	1.2E+8	3.2E+9	8.7E+7	NA
Hexachlorobenzene (C-66)	ug/Kg	330	1800	350	8200	2.2E+5	4.3E+4	6.5E+6	37000	NA
Hexachlorobutadiene (C-46)	ug/Kg	50	72000	91	3.5E+5 {C}	3.5E+5 {C}	3.5E+5	1.4E+8	3.5E+5 {C}	3.5E+5
Hexachlorocyclopentadiene (C-56	ug/Kg	330	3.2E+5	ID	7.2E+5 {C}	56000	4.6E+4	4.5E+6	7.2E+5 {C}	7.2E+5
Hexachloroethane	ug/Kg	300	1200	1800 {X}	1.1E+5	79000	1.1E+6	7.7E+7	7.3E+5	NA
Indeno(1,2,3-cd)pyrene {Q}	ug/Kg	330	NLL	NLL	NLL	NLV	NLV	ID	80000	NA
Isophorone	ug/Kg	330	62000	26000 {X}	2.4E+6 {C}	NLV	NLV	6.3E+9	2.4E+6 {C}	2.4E+6
2-Methyl-4,6-dinitrophenol	ug/Kg	830	830 {M} :400	NA	1.9E+5	NLV	NLV	4.5E+7	2.6E+5	NA
2-Methylnaphthalene	ug/Kg	330	1.7E+5	4200	5.5E+6	4.9E+6	1.4E+6	2.2E+8	2.6E+7	NA
2-Methylphenol {J}	ug/Kg	330	20000	1000 {M}: 600	1.6E+7	NLV	NLV	2.2E+9	3.6E+7	NA
4-Methylphenol {J}	ug/Kg	330	20000	1000 {M}: 600	1.6E+7	NLV	NLV	2.2E+9	3.6E+7	NA
Naphthalene	ug/Kg	330	1.0E+5	730	2.1E+6	4.7E+5	2.7E+5	6.8E+7	5.2E+7	NA
2-Nitroaniline	ug/Kg	830	NA	NA	NA	NA	NA	NA	NA	NA
3-Nitroaniline	ug/Kg	830	NA	NA	NA	NA	NA	NA	NA	NA
4-Nitroaniline	ug/Kg	830	NA	NA	NA	NA	NA	NA	NA	NA
Nitrobenzene {I}	ug/Kg	330	330 {M} :190	3600 {X}	2.2E+5	1.7E+5	4.9E+4	1.6E+7	3.4E+5	4.9E+5
2-Nitrophenol	ug/Kg	330	1200	ID	1.6E+6	NLV	NLV	ID	2.0E+6	NA
4-Nitrophenol	ug/Kg	830	NA	NA	NA	NA	NA	NA	NA	NA
n-Nitroso-di-n-propylamine	ug/Kg	330	330 {M} :100	NA	7200	NLV	NLV	1.5E+6	5400	1.5E+6
N-Nitrosodiphenylamine	ug/Kg	330	22000	NA	7.0E+5	NLV	NLV	2.2E+9	7.8E+6	NA
Pentachlorophenol	ug/Kg	20	22	{G,X}	4300	NLV	NLV	1.0E+8	3.2E+5	NA
Phenanthrene	ug/Kg	330	1.6E+5	2100	1.1E+6	5.1E+6	1.5E+5	2.2E+6	5.2E+6	NA
Phenol	ug/Kg	330	2.6E+5	9000	1.2E+7 {C}	NLV	NLV	1.4E+10	1.2E+7 {C,DD}	1.2E+7
Pyrene	ug/Kg	330	4.8E+5	ID	4.8E+5	1.0E+9 {D}	6.0E+8	2.2E+9	8.4E+7	NA

Table 1
Summary of Soil Analytical Results - MWD Property
Holland, Michigan

Sample Location Lab Sample ID Sampled By Analyzed By Sample Date Sample Depth (ft.)		Background Target Method Detection Limit	Non-Residential Drinking Water Protection	Groundwater Surface Water Interface Protection	Groundwater Contact Protection	Non-Residential Soil Volatilization to Indoor Air Inhalation	Non-Residential Volatile Soil Inhalation 5-Meter (2-Acre)	Non-Residential Particulate Soil Inhalation (2-Acre)	Non-Residential Direct Contact	Soil Saturation Screening Levels
Semi-Volatiles Cont.	*Units*									
1,2,4-Trichlorobenzene	ug/Kg	330	4200	5900 {X}	1.1E+6	1.1E+6 {C}	2.6E+7	8.5E+9	1.1E+6 {C,DD}	1.1E+6
2,4,5-Trichlorophenol	ug/Kg	330	1.1E+5	NA	9.1E+6	NLV	NLV	7.7E+9	7.3E+7	NA
2,4,6-Trichlorophenol	ug/Kg	330	9400	330 {M} 100	2.0E+5	NLV	NLV	1.0E+9	3.3E+6	NA
Volatiles	*Units*									
Acetone {I}	ug/Kg	1000	42000	34000	1.1E+8 {C}	1.1E+8 {C}	1.2E+8	1.3E+11	7.3E+7	1.1E+8
Benzene {I}	ug/Kg	50	100	4000 {X}	2.2E+5	8400	7.6E+4	3.6E+8	4.0E+5 {C}	4.0E+5
Bromodichloromethane	ug/Kg	100	1600 {W}	ID	2.8E+5	6400	2.4E+4	8.5E+7	4.9E+5	1.5E+6
Bromoform	ug/Kg	100	1600 {W}	ID	8.7E+5 {C}	7.7E+5	2.4E+6	2.8E+9	8.7E+5 {C}	8.7E+5
Bromomethane	ug/Kg	200	580	700	1.4E+6	1600	4.4E+4	1.2E+8	1.0E+6	2.2E+6
2-Butanone (MEK) {I}	ug/Kg	750	7.6E+5	44000	2.7E+7 {C}	2.7E+7 {C}	2.7E+7	2.2E+10	2.7E+7 {C,DD}	2.7E+7
Carbon disulfide {I,R}	ug/Kg	250	46000	ID	2.8E+5 {C}	1.4E+5	6.2E+6	1.6E+10	2.8E+5 {C,DD}	2.8E+5
Carbon tetrachloride	ug/Kg	50	100	900 {X}	92000	990	2.6E+4	1.3E+8	3.9E+5 {C}	3.9E+5
Chlorobenzene {I}	ug/Kg	50	2000	500	2.6E+5 {C}	2.2E+5	8.5E+5	1.6E+9	2.6E+5 {C}	2.6E+5
Chloroethane	ug/Kg	250	34000	22000 {X}	9.5E+5 {C}	9.5E+5 {C}	9.2E+7	2.2E+11	9.5E+5 {C}	9.5E+5
Chloroform	ug/Kg	50	1600 {W}	7000	1.5E+6 {C}	38000	2.6E+5	1.2E+9	1.5E+6 {C}	1.5E+6
Chloromethane {I}	ug/Kg	250	22000	ID	1.1E+6 {C}	10000	7.7E+5	2.0E+9	1.1E+6 {C}	1.1E+6
Dibromochloromethane	ug/Kg	100	1600 {W}	ID	3.6E+5	21000	6.2E+4	1.2E+8	5.0E+5	6.1E+5
1,1-Dichloroethane	ug/Kg	50	50000	15000	8.9E+5 {C}	4.3E+5	4.6E+6	1.2E+10	8.9E+5 {C}	8.9E+5
1,2-Dichloroethane {I}	ug/Kg	50	100	7200 {X}	3.8E+5	11000	2.5E+4	1.2E+8	4.2E+5	1.2E+6
1,1-Dichloroethylene {I}	ug/Kg	50	140	2600	2.2E+5 {X}	330	1.2E+4	6.0E+7	5.7E+5 {C}	5.7E+5
1,2-Dichloroethylene {I}	ug/Kg	50	1400	12000	6.4E+5 {C}	41000	3.3E+5	7.7E+8	6.4E+5 {C}	6.4E+5
cis-1,2-Dichloroethylene {I}	ug/Kg	50	1400	12000	6.4E+5 {C}	41000	3.3E+5	7.7E+8	6.4E+5 {C}	6.4E+5
trans-1,2-Dichloroethylene	ug/Kg	50	2000	30000 {X}	1.4E+6 {C}	43000	6.5E+5	1.6E+9	1.4E+6 {C}	1.4E+6
1,2-Dichloropropane {I}	ug/Kg	50	100	4600 {X}	3.2E+5	7400	3.9E+4	9.2E+7	5.5E+5 {C}	5.5E+5
cis-1,3-Dichloropropene {J}	ug/Kg	50	700	180 {X}	1.1E+5	5400	1.5E+5	4.5E+8	2.4E+5	6.2E+5
1,3-Dichloropropene, total {J}	ug/Kg	100	700	180 {X}	1.1E+5	5400	1.5E+5	4.5E+8	2.4E+5	6.2E+5
trans-1,3-Dichloropropene {J}	ug/Kg	50	700	180 {X}	1.1E+5	5400	1.5E+5	4.5E+8	2.4E+5	6.2E+5
Ethyl acetate {I}	ug/Kg	NA	3.8E+5	NA	7.5E+6 {C}	7.5E+6 {C}	4.5E+7	7.2E+10	7.5E+6 {C}	7.5E+6
Ethylbenzene {I}	ug/Kg	50	1500	360	1.4E+5 {C}	1.4E+5 {C}	2.4E+6	1.0E+10	1.4E+5 {C}	1.4E+5
Hexane {I}	ug/Kg	NA	44000 {C}	NA	44000 {C}	44000 {C}	2.7E+6	4.5E+9	44000 {C}	44000
2-Hexanone {I}	ug/Kg	2500	58000	ID	2.5E+6 {C}	1.8E+6	1.0E+6	9.2E+8	2.5E+6 {C}	2.5E+6
Methylene chloride	ug/Kg	100	100	30000 {X}	2.3E+6 {C}	2.4E+5	1.3E+6	6.4E+9	2.3E+6 {C}	2.3E+6
4-Methyl-2-pentanone (MIBK) {I}	ug/Kg	2500	1.0E+5	ID	2.7E+6 {C}	2.7E+6 {C}	4.1E+7	4.6E+10	2.7E+6 {C}	2.7E+6
Styrene {I}	ug/Kg	50	2700	2100	2.7E+5	5.2E+5 {C}	2.5E+6	5.3E+9	5.2E+5 {C}	5.2E+5
1,1,2,2-Tetrachloroethane	ug/Kg	50	700	1600 {X}	94000	23000	2.6E+4	5.2E+7	2.4E+5	8.7E+5
Tetrachloroethylene	ug/Kg	50	100	1200 {X}	88000 {C}	21000	3.8E+5	9.2E+8	88000 {C}	88000
Toluene {I}	ug/Kg	100	16000	5400	2.5E+5 {C}	2.5E+5 {C}	2.8E+7	9.2E+9	2.5E+5 {C}	2.5E+5
1,1,1-Trichloroethane	ug/Kg	50	4000	1800	4.6E+5 {C}	4.6E+5	1.2E+7	2.2E+10	4.6E+5 {C}	4.6E+5
1,1,2-Trichloroethane	ug/Kg	50	100	6600 {X}	4.2E+5	24000	4.4E+4	1.9E+8	8.4E+5	9.2E+5
Trichloroethylene	ug/Kg	50	100	4000 {X}	4.4E+5	1900	1.9E+4	4.5E+7	5.0E+5 {C,DD}	5.0E+5
Vinyl chloride	ug/Kg	40	40	260 {X}	20000	2800	1.3E+5	6.9E+8	34000	4.9E+5
Xylene (Total) {I}	ug/Kg	50	5600	820	1.5E+5 {C}	1.5E+5 {C}	5.0E+7	1.0E+11	1.5E+5 {C}	1.5E+5
Xylene, o {I}	ug/Kg	100	5600	820	1.5E+5 {C}	1.5E+5 {C}	5.0E+7	1.0E+11	1.5E+5 {C}	1.5E+5
Xylene, p&m {I}	ug/Kg	150	5600	820	1.5E+5 {C}	1.5E+5 {C}	5.0E+7	1.0E+11	1.5E+5 {C}	1.5E+5

Table 1
Summary of Soil Analytical Results - MWD Property
Holland, Michigan

Sample Location		SB-OS-2	SB-OS-2	SB-OS-3	SB-OS-3	SB-OS-4	SB-OS-4	SB-OS-5	SB-OS-5	SB-OS-12	SB-OS-14	SB-OS-14	SB-OS-15	SB-OS-15	SB-OS-17
Lab Sample ID		0209137-05	0209137-06	0209137-07	0209137-08	0209137-09	0209137-10	0209137-11	0209137-12	0301083-10	0301083-11	0301083-12	0301083-13	0301083-14	0305078-01
Sampled By		Horizon	Horizon	Horizon	Horizon	Horizon	Horizon	Horizon	Horizon	Horizon	Horizon	Horizon	Horizon	Horizon	Horizon
Analyzed By		E Lab	E Lab	E Lab	E Lab	E Lab	E Lab	E Lab	E Lab	e-Lab	E Lab	E Lab	E Lab	E Lab	e-Lab
Sample Date		09/09/2002	09/09/2002	09/09/2002	09/09/2002	09/09/2002	09/09/2002	09/09/2002	09/09/2002	01/08/2003	01/08/2003	01/08/2003	01/08/2003	01/08/2003	05/05/2003
Sample Depth (ft.)		2'-4'	8'-8.5'	2'-4'	8'-8.5'	2'-4'	8'-8.5'	2'-4'	8'-8.5'	5.5'-6'	1'-2'	3'-4'	2'-3'	5'-6'	7.0'-7.5'
Inorganics	*Units*														
Arsenic	mg/Kg	---	**0.85**	---	**1.6**	---	**0.67**	---	**1.1**	---	---	---	---	---	**2.5**
Barium {B}	mg/Kg	---	**16**	---	**14**	---	**14**	---	**14**	---	---	---	---	---	---
Cadmium {B}	mg/Kg	---	**0.043**	---	**0.019**	---	<0.0062	---	<0.0087	---	---	---	---	---	---
Chromium, Total	mg/Kg	---	**5.8**	---	**5.6**	---	**7**	---	**5.8**	---	---	---	---	---	**14**
Copper {B}	mg/Kg	---	**1.3**	---	**1.9**	---	**1.6**	---	**2.7**	---	---	---	---	---	**8.8**
Lead {B}	mg/Kg	---	**2.5**	---	**2.4**	---	**3.3**	---	**2.5**	---	---	---	---	---	---
Mercury, Total {B,Z}	mg/Kg	---	<0.056	---	<0.055	---	<0.055	---	<0.055	---	---	---	---	---	**0.083**
Selenium {B}	mg/Kg	---	<0.039	---	<0.038	---	<0.031	---	**0.058**	---	---	---	---	---	**0.2**
Silver {B}	mg/Kg	---	<0.02	---	**0.021**	---	**0.016**	---	**0.029**	---	---	---	---	---	**0.58**
Zinc {B}	mg/Kg	---	**9.6**	---	**9.8**	---	**13**	---	**13**	---	---	---	---	---	---
Misc.	*Units*														
Isopropyl alcohol {I}	mg/Kg	---	<11	---	<11	---	<11	---	<11	---	---	---	---	---	---
Methanol {I}	mg/Kg	---	<11	---	<11	---	<11	---	<11	---	---	---	---	---	---
Percent Moisture	%	**5.8**	**10**	**3.7**	**8.4**	**3.2**	**9.4**	**4.5**	**8.7**	**52**	**8.9**	**36**	**7**	**20**	**29**
PCB's	*Units*														
Aroclor 1016 {J,T}	ug/Kg	<110	<110	<110	<100	<100	<110	<110	<110	<79	<43	<60	<44	<53	<410
Aroclor 1221 {J,T}	ug/Kg	<110	<110	<110	<100	<100	<110	<110	<110	<79	<43	<60	<44	<53	<410
Aroclor 1232 {J,T}	ug/Kg	<110	<110	<110	<100	<100	<110	<110	<110	<79	<43	<60	<44	<53	<410
Aroclor 1242 {J,T}	ug/Kg	<110	<110	<110	<100	<100	<110	<110	<110	<79	<43	<60	<44	<53	<410
Aroclor 1248 {J,T}	ug/Kg	<110	<110	**280**	<100	<100	**750**	<110	**110**	<79	<43	<60	**830**	<53	<410
Aroclor 1254 {J,T}	ug/Kg	<110	<110	<110	<100	<100	<110	<110	<110	<79	<43	<60	<44	<53	<410
Aroclor 1260 {J,T}	ug/Kg	<110	<110	<110	<100	<100	<110	<110	<110	<79	<43	<60	<44	<53	<410
Semi-Volatiles	*Units*														
Acenaphthene	ug/Kg	---	<71	---	<140	---	<69	---	<70	<130	---	---	---	---	<86
Acenaphthylene	ug/Kg	---	<71	---	<140	---	<69	---	<70	<130	---	---	---	---	<86
Aniline	ug/Kg	---	<730	---	<1500	---	<710	---	<730	<1400	---	---	---	---	<880
Anthracene	ug/Kg	---	<71	---	<140	---	<69	---	<70	<130	---	---	---	---	<86
Benzo(a)anthracene {Q}	ug/Kg	---	<71	---	<140	---	<69	---	<70	<130	---	---	---	---	<86
Benzo(a)pyrene {Q}	ug/Kg	---	<71	---	<140	---	<69	---	<70	<130	---	---	---	---	<86
Benzo(b)fluoranthene {Q}	ug/Kg	---	<71	---	<140	---	<69	---	<70	<130	---	---	---	---	<86
Benzo(g,h,i)perylene	ug/Kg	---	<71	---	<140	---	<69	---	<70	<130	---	---	---	---	<86
Benzo(k)fluoranthene {Q}	ug/Kg	---	<71	---	<140	---	<69	---	<70	<130	---	---	---	---	<86
Benzophenone	ug/Kg	---	<370	---	<730	---	<360	---	<360	<680	---	---	---	---	<440
bis(2-Chloroethoxy)methane	ug/Kg	---	<180	---	<350	---	<170	---	<180	<330	---	---	---	---	<210
bis(2-Chloroethyl)ether {I}	ug/Kg	---	<180	---	<350	---	<170	---	<180	<330	---	---	---	---	<210
bis(2-Chloroisopropyl)ether	ug/Kg	---	<180	---	<350	---	<170	---	<180	<330	---	---	---	---	<210
bis(2-Ethylhexyl)phthalate	ug/Kg	---	<370	---	<730	---	<360	---	<360	<680	---	---	---	---	<440
4-Bromophenyl phenylether	ug/Kg	---	<180	---	<350	---	<170	---	<180	<330	---	---	---	---	<210
Butyl benzyl phthalate	ug/Kg	---	<180	---	<350	---	<170	---	<180	<330	---	---	---	---	<210
Carbazole	ug/Kg	---	<180	---	<350	---	<170	---	<180	<330	---	---	---	---	<210
4-Chloroaniline	ug/Kg	---	<730	---	<1500	---	<710	---	<730	<1400	---	---	---	---	<880
4-Chloro-3-methylphenol	ug/Kg	---	<180	---	<350	---	<170	---	<180	<330	---	---	---	---	<210
beta-Chloronaphthalene	ug/Kg	---	<180	---	<350	---	<170	---	<180	<330	---	---	---	---	<210
2-Chlorophenol	ug/Kg	---	<180	---	<350	---	<170	---	<180	<330	---	---	---	---	<210

Table 1
Summary of Soil Analytical Results - MWD Property
Holland, Michigan

Sample Location		SB-OS-2	SB-OS-2	SB-OS-3	SB-OS-3	SB-OS-4	SB-OS-4	SB-OS-5	SB-OS-5	SB-OS-12	SB-OS-14	SB-OS-14	SB-OS-15	SB-OS-15	SB-OS-17
Lab Sample ID		0209137-05	0209137-06	0209137-07	0209137-08	0209137-09	0209137-10	0209137-11	0209137-12	0301083-10	0301083-11	0301083-12	0301083-13	0301083-14	0305078-01
Sampled By		Horizon	Horizon	Horizon	Horizon	Horizon	Horizon	Horizon	Horizon	Horizon	Horizon	Horizon	Horizon	Horizon	Horizon
Analyzed By		E Lab	E Lab	E Lab	E Lab	E Lab	E Lab	E Lab	E Lab	e-Lab	E Lab	E Lab	E Lab	E Lab	e-Lab
Sample Date		09/09/2002	09/09/2002	09/09/2002	09/09/2002	09/09/2002	09/09/2002	09/09/2002	09/09/2002	01/08/2003	01/08/2003	01/08/2003	01/08/2003	01/08/2003	05/05/2003
Sample Depth (ft.)		2'-4'	8'-8.5'	2'-4'	8'-8.5'	2'-4'	8'-8.5'	2'-4'	8'-8.5'	5.5'-6'	1'-2'	3'-4'	2'-3'	5'-6'	7.0'-7.5'
Semi-Volatiles Cont.	*Units*														
4-Chlorophenyl phenylether	ug/Kg	---	<180	---	<350	---	<170	---	<180	<330	---	---	---	---	<210
Chrysene {Q}	ug/Kg	---	<71	---	<140	---	<69	---	<70	<130	---	---	---	---	**100**
Dibenzo(a,h)anthracene {Q}	ug/Kg	---	<71	---	<140	---	<69	---	<70	<130	---	---	---	---	<86
Dibenzofuran	ug/Kg	---	<180	---	<350	---	<170	---	<180	<330	---	---	---	---	<210
1,2-Dichlorobenzene	ug/Kg	---	<180	---	<350	---	<170	---	<180	<330	---	---	---	---	<210
1,3-Dichlorobenzene	ug/Kg	---	<180	---	<350	---	<170	---	<180	<330	---	---	---	---	<210
1,4-Dichlorobenzene	ug/Kg	---	<180	---	<350	---	<170	---	<180	<330	---	---	---	---	<210
3,3'-Dichlorobenzidine	ug/Kg	---	<730	---	<1500	---	<710	---	<730	<1400	---	---	---	---	<880
2,4-Dichlorophenol	ug/Kg	---	<180	---	<350	---	<170	---	<180	<330	---	---	---	---	<210
Diethyl phthalate	ug/Kg	---	<370	---	<730	---	<360	---	<360	<680	---	---	---	---	<440
Dimethyl phthalate	ug/Kg	---	<370	---	<730	---	<360	---	<360	<680	---	---	---	---	<440
2,4-Dimethylphenol	ug/Kg	---	<370	---	<730	---	<360	---	<360	<680	---	---	---	---	<440
Di-n-butyl phthalate	ug/Kg	---	<370	---	<730	---	<360	---	<360	<680	---	---	---	---	<440
2,4-Dinitrophenol	ug/Kg	---	<730	---	<1500	---	<710	---	<730	<1400	---	---	---	---	<880
2,4-Dinitrotoluene	ug/Kg	---	<180	---	<350	---	<170	---	<180	<330	---	---	---	---	<210
2,6-Dinitrotoluene	ug/Kg	---	<180	---	<350	---	<170	---	<180	<330	---	---	---	---	<210
Di-n-octyl phthalate	ug/Kg	---	<180	---	<350	---	<170	---	<180	<330	---	---	---	---	<210
Dimethylformamide {I}	ug/Kg	---	<370	---	<730	---	<360	---	<360	<680	---	---	---	---	---
5,5-Diphenylhydantoin	ug/Kg	---	<370	---	<730	---	<360	---	<360	<680	---	---	---	---	**4000**
Fluoranthene	ug/Kg	---	<71	---	<140	---	<69	---	<70	<130	---	---	---	---	**190**
Fluorene	ug/Kg	---	<71	---	<140	---	<69	---	<70	<130	---	---	---	---	<86
Hexachlorobenzene (C-66)	ug/Kg	---	<180	---	<350	---	<170	---	<180	<330	---	---	---	---	<210
Hexachlorobutadiene (C-46)	ug/Kg	---	<180	---	<350	---	<170	---	<180	<330	---	---	---	---	<210
Hexachlorocyclopentadiene (C-56	ug/Kg	---	<370	---	<730	---	<360	---	<360	<680	---	---	---	---	<440
Hexachloroethane	ug/Kg	---	<180	---	<350	---	<170	---	<180	<330	---	---	---	---	<210
Indeno(1,2,3-cd)pyrene {Q}	ug/Kg	---	<71	---	<140	---	<69	---	<70	<130	---	---	---	---	<86
Isophorone	ug/Kg	---	<180	---	<350	---	<170	---	<180	<330	---	---	---	---	<210
2-Methyl-4,6-dinitrophenol	ug/Kg	---	<670	---	<1300	---	<650	---	<660	<680	---	---	---	---	<440
2-Methylnaphthalene	ug/Kg	---	<180	---	<350	---	<170	---	<180	<330	---	---	---	---	<210
2-Methylphenol {J}	ug/Kg	---	<180	---	<350	---	<170	---	<180	<330	---	---	---	---	<210
4-Methylphenol {J}	ug/Kg	---	<180	---	<350	---	<170	---	<180	<330	---	---	---	---	<210
Naphthalene	ug/Kg	---	<71	---	<140	---	<69	---	<70	<130	---	---	---	---	<86
2-Nitroaniline	ug/Kg	---	<730	---	<1500	---	<710	---	<730	<1400	---	---	---	---	<880
3-Nitroaniline	ug/Kg	---	<730	---	<1500	---	<710	---	<730	<1400	---	---	---	---	<880
4-Nitroaniline	ug/Kg	---	<730	---	<1500	---	<710	---	<730	<1400	---	---	---	---	<880
Nitrobenzene {I}	ug/Kg	---	<180	---	<350	---	<170	---	<180	<330	---	---	---	---	<210
2-Nitrophenol	ug/Kg	---	<180	---	<350	---	<170	---	<180	<330	---	---	---	---	<210
4-Nitrophenol	ug/Kg	---	<730	---	<1500	---	<710	---	<730	<1400	---	---	---	---	<880
n-Nitroso-di-n-propylamine	ug/Kg	---	<180	---	<350	---	<170	---	<180	<330	---	---	---	---	<210
N-Nitrosodiphenylamine	ug/Kg	---	<180	---	<350	---	<170	---	<180	<330	---	---	---	---	<210
Pentachlorophenol	ug/Kg	---	<370	---	<730	---	<360	---	<360	<680	---	---	---	---	<440
Phenanthrene	ug/Kg	---	<71	---	<140	---	<69	---	<70	<130	---	---	---	---	**160**
Phenol	ug/Kg	---	<180	---	<350	---	<170	---	<180	<330	---	---	---	---	<210
Pyrene	ug/Kg	---	<71	---	<140	---	<69	---	<70	<130	---	---	---	---	**160**

Table 1
Summary of Soil Analytical Results - MWD Property
Holland, Michigan

Sample Location		SB-OS-2	SB-OS-2	SB-OS-3	SB-OS-3	SB-OS-4	SB-OS-4	SB-OS-5	SB-OS-5	SB-OS-12	SB-OS-14	SB-OS-14	SB-OS-15	SB-OS-15	SB-OS-17
Lab Sample ID		0209137-05	0209137-06	0209137-07	0209137-08	0209137-09	0209137-10	0209137-11	0209137-12	0301083-10	0301083-11	0301083-12	0301083-13	0301083-14	0305078-01
Sampled By		Horizon	Horizon	Horizon	Horizon	Horizon	Horizon	Horizon	Horizon	Horizon	Horizon	Horizon	Horizon	Horizon	Horizon
Analyzed By		E Lab	E Lab	E Lab	E Lab	E Lab	E Lab	E Lab	E Lab	e-Lab	E Lab	E Lab	E Lab	E Lab	e-Lab
Sample Date		09/09/2002	09/09/2002	09/09/2002	09/09/2002	09/09/2002	09/09/2002	09/09/2002	09/09/2002	01/08/2003	01/08/2003	01/08/2003	01/08/2003	01/08/2003	05/05/2003
Sample Depth (ft.)		2'-4'	8'-8.5'	2'-4'	8'-8.5'	2'-4'	8'-8.5'	2'-4'	8'-8.5'	5.5'-6'	1'-2'	3'-4'	2'-3'	5'-6'	7.0'-7.5'
Semi-Volatiles Cont.	*Units*														
1,2,4-Trichlorobenzene	ug/Kg	---	<180	---	<350	---	<170	---	<180	<330	---	---	---	---	<210
2,4,5-Trichlorophenol	ug/Kg	---	<180	---	<350	---	<170	---	<180	<330	---	---	---	---	<210
2,4,6-Trichlorophenol	ug/Kg	---	<180	---	<350	---	<170	---	<180	<330	---	---	---	---	<210
Volatiles	*Units*														
Acetone {I}	ug/Kg	---	<500	---	<490	---	<500	---	<490	<1100	---	---	---	---	<770
Benzene {I}	ug/Kg	---	<33	---	<33	---	<33	---	<33	<98	---	---	---	---	<51
Bromodichloromethane	ug/Kg	---	<67	---	<66	---	<66	---	<66	<150	---	---	---	---	<100
Bromoform	ug/Kg	---	<67	---	<66	---	<66	---	<66	<150	---	---	---	---	<100
Bromomethane	ug/Kg	---	<170	---	<160	---	<170	---	<160	<370	---	---	---	---	<260
2-Butanone (MEK) {I}	ug/Kg	---	<170	---	<160	---	<170	---	<160	<370	---	---	---	---	<260
Carbon disulfide {I,R}	ug/Kg	---	<170	---	<160	---	<170	---	<160	<370	---	---	---	---	<260
Carbon tetrachloride	ug/Kg	---	<33	---	<33	---	<33	---	<33	<98	---	---	---	---	<51
Chlorobenzene {I}	ug/Kg	---	**490**	---	**460**	---	<33	---	<33	**330**	---	---	---	---	**380**
Chloroethane	ug/Kg	---	<170	---	<160	---	<170	---	<160	<370	---	---	---	---	<260
Chloroform	ug/Kg	---	<33	---	<33	---	<33	---	<33	<98	---	---	---	---	<51
Chloromethane {I}	ug/Kg	---	<170	---	<160	---	<170	---	<160	<370	---	---	---	---	<260
Dibromochloromethane	ug/Kg	---	<67	---	<66	---	<66	---	<66	<150	---	---	---	---	<100
1,1-Dichloroethane	ug/Kg	---	<33	---	<33	---	<33	---	<33	<98	---	---	---	---	<51
1,2-Dichloroethane {I}	ug/Kg	---	<33	---	<33	---	<33	---	<33	<98	---	---	---	---	<51
1,1-Dichloroethylene {I}	ug/Kg	---	<33	---	<33	---	<33	---	<33	<98	---	---	---	---	<51
1,2-Dichloroethylene {I}	ug/Kg	---	<67	---	<66	---	<66	---	<66	<150	---	---	---	---	<100
cis-1,2-Dichloroethylene {I}	ug/Kg	---	<33	---	<33	---	<33	---	<33	<98	---	---	---	---	<51
trans-1,2-Dichloroethylene	ug/Kg	---	<33	---	<33	---	<33	---	<33	<98	---	---	---	---	<51
1,2-Dichloropropane {I}	ug/Kg	---	<33	---	<33	---	<33	---	<33	<98	---	---	---	---	<51
cis-1,3-Dichloropropene {J}	ug/Kg	---	<33	---	<33	---	<33	---	<33	<98	---	---	---	---	<51
1,3-Dichloropropene, total {J}	ug/Kg	---	---	---	---	---	---	---	---	---	---	---	---	---	<100
trans-1,3-Dichloropropene {J}	ug/Kg	---	<33	---	<33	---	<33	---	<33	<98	---	---	---	---	<51
Ethyl acetate {I}	ug/Kg	---	<560	---	<550	---	<550	---	<550	<1200	---	---	---	---	---
Ethylbenzene {I}	ug/Kg	---	<33	---	<33	---	<33	---	<33	<98	---	---	---	---	<51
Hexane {I}	ug/Kg	---	<560	---	<550	---	<550	---	<550	<1200	---	---	---	---	---
2-Hexanone {I}	ug/Kg	---	<170	---	<160	---	<170	---	<160	<370	---	---	---	---	<260
Methylene chloride	ug/Kg	---	<560	---	<550	---	<550	---	<550	<370	---	---	---	---	<260
4-Methyl-2-pentanone (MIBK) {I}	ug/Kg	---	<170	---	<160	---	<170	---	<160	<370	---	---	---	---	<260
Styrene {I}	ug/Kg	---	<33	---	<33	---	<33	---	<33	<98	---	---	---	---	<51
1,1,2,2-Tetrachloroethane	ug/Kg	---	<67	---	<66	---	<66	---	<66	<150	---	---	---	---	<100
Tetrachloroethylene	ug/Kg	---	<33	---	<33	---	<33	---	<33	<98	---	---	---	---	<51
Toluene {I}	ug/Kg	---	<33	---	<33	---	<33	---	<33	<98	---	---	---	---	<51
1,1,1-Trichloroethane	ug/Kg	---	<33	---	<33	---	<33	---	<33	<98	---	---	---	---	<51
1,1,2-Trichloroethane	ug/Kg	---	<33	---	<33	---	<33	---	<33	<98	---	---	---	---	<51
Trichloroethylene	ug/Kg	---	<33	---	<33	---	<33	---	<33	<98	---	---	---	---	<51
Vinyl chloride	ug/Kg	---	<67	---	<66	---	<66	---	<66	<150	---	---	---	---	<100
Xylene (Total) {I}	ug/Kg	---	<100	---	<98	---	<99	---	<99	<220	---	---	---	---	<150
Xylene, o {I}	ug/Kg	---	<33	---	<33	---	<33	---	<33	<98	---	---	---	---	<51
Xylene, p&m {I}	ug/Kg	---	<67	---	<66	---	<66	---	<66	<150	---	---	---	---	<100

Table 1
Summary of Soil Analytical Results - MWD Property
Holland, Michigan

Sample Location		SB-OS-17	SB-OS-18	SB-OS-18	SB-OS-25	SB-OS-26	SB-OS-26	SB-OS-26	SB-OS-27	SB-OS-27	SB-OS-28	SB-OS-28	SB-OS-28	SB-OS-29	SB-OS-29
Lab Sample ID		0305078-02	0305078-03	0305078-04	0306200-01	0306200-02	0306200-03	0306200-04	0306200-05	0306200-06	0306200-24	0306200-25	0306200-26	0306200-21	0306200-22
Sampled By		Horizon	Horizon	Horizon	Horizon	Horizon	Horizon	Horizon	Horizon	Horizon	Horizon	Horizon	Horizon	Horizon	Horizon
Analyzed By		e-Lab	e-Lab	e-Lab	e-Lab	e-Lab	e-Lab	e-Lab	e-Lab	e-Lab	e-Lab	e-Lab	e-Lab	e-Lab	e-Lab
Sample Date		05/05/2003	05/05/2003	05/05/2003	06/12/2003	06/12/2003	06/12/2003	06/12/2003	06/12/2003	06/12/2003	06/13/2003	06/13/2003	06/13/2003	06/13/2003	06/13/2003
Sample Depth (ft.)		9.5'-10'	6.0'-6.5'	9.5'-10'	6'-6.5'	3.5'-4.0'	7.5'-8.0'	9.0'-9.5'	5.5'-6.0'	7.5'-8.0'	3.0'-3.5'	5.5'-6.0'	9.5'-10.0'	3.0'-3.5'	5.0'-5.5'
Inorganics	*Units*														
Arsenic	mg/Kg	**6.4**	**3.2**	**6.9**	---	---	---	---	---	---	---	---	---	---	---
Barium {B}	mg/Kg	---	---	---	---	---	---	---	---	---	---	---	---	---	---
Cadmium {B}	mg/Kg	---	---	---	---	---	---	---	---	---	---	---	---	---	---
Chromium, Total	mg/Kg	**190**	**16**	**45**	---	---	---	---	---	---	---	---	---	---	---
Copper {B}	mg/Kg	**59**	**12**	**34**	---	---	---	---	---	---	---	---	---	---	---
Lead {B}	mg/Kg	---	---	---	---	---	---	---	---	---	---	---	---	---	---
Mercury, Total {B,Z}	mg/Kg	<0.10	**0.2**	<0.10	---	---	---	---	---	---	---	---	---	---	---
Selenium {B}	mg/Kg	**0.33**	**0.18**	**0.28**	---	---	---	---	---	---	---	---	---	---	---
Silver {B}	mg/Kg	**0.25**	**0.15**	**0.83**	---	---	---	---	---	---	---	---	---	---	---
Zinc {B}	mg/Kg	---	---	---	---	---	---	---	---	---	---	---	---	---	---
Misc.	*Units*														
Isopropyl alcohol {I}	mg/Kg	---	---	---	---	---	---	---	---	---	---	---	---	---	---
Methanol {I}	mg/Kg	---	---	---	---	---	---	---	---	---	---	---	---	---	---
Percent Moisture	%	**51**	**35**	**51**	**4.6**	**4.5**	**42**	**50**	**40**	**45**	**23**	**26**	**54**	**16**	**38**
PCB's	*Units*														
Aroclor 1016 {J,T}	ug/Kg	<600	<460	<590	<330	<330	<330	<300	<330	<330	<320	<330	<310	<330	<320
Aroclor 1221 {J,T}	ug/Kg	<600	<460	<590	<330	<330	<330	<300	<330	<330	<320	<330	<310	<330	<320
Aroclor 1232 {J,T}	ug/Kg	<600	<460	<590	<330	<330	<330	<300	<330	<330	<320	<330	<310	<330	<320
Aroclor 1242 {J,T}	ug/Kg	<600	<460	<590	<330	<330	<330	<300	<330	<330	<320	<330	<310	<330	<320
Aroclor 1248 {J,T}	ug/Kg	<600	<460	<590	<330	<330	<330	<300	<330	<330	<320	<330	<310	<330	<320
Aroclor 1254 {J,T}	ug/Kg	<600	<460	<590	<330	<330	<330	<300	<330	<330	<320	<330	<310	<330	<320
Aroclor 1260 {J,T}	ug/Kg	<600	<460	<590	<330	<330	<330	<300	<330	<330	<320	<330	<310	<330	<320
Semi-Volatiles	*Units*														
Acenaphthene	ug/Kg	<140	<100	<140	<330	<330	<320	<330	<320	<320	<320	<320	<320	<330	<320
Acenaphthylene	ug/Kg	<140	<100	<140	<330	<330	<320	<330	<320	<320	<320	<320	<320	<330	<320
Aniline	ug/Kg	<1400	<1000	<1400	<1700	<1700	<1700	<1700	<1500	<1700	<1700	<1700	<1700	<1700	<1700
Anthracene	ug/Kg	<140	<100	<140	**350**	<330	<320	<330	<320	<320	<320	<320	<320	<330	<320
Benzo(a)anthracene {Q}	ug/Kg	<140	<100	<140	**860**	**350**	<320	<330	<320	<320	<320	<320	<320	<330	<320
Benzo(a)pyrene {Q}	ug/Kg	<140	<100	<140	**920**	<330	**410**	<330	<320	<320	<320	<320	<320	<330	<320
Benzo(b)fluoranthene {Q}	ug/Kg	<140	<100	<140	**950**	<330	<320	<330	<320	<320	<320	<320	<320	<330	<320
Benzo(g,h,i)perylene	ug/Kg	<140	<100	<140	**530**	<330	<320	<330	<320	<320	<320	<320	<320	<330	<320
Benzo(k)fluoranthene {Q}	ug/Kg	<140	<100	<140	**650**	<330	<320	<330	<320	<320	<320	<320	<320	<330	<320
Benzophenone	ug/Kg	**5600**	<510	**1400**	<330	<330	<320	**1100**	<320	**860**	<320	<320	**1200**	<330	<320
bis(2-Chloroethoxy)methane	ug/Kg	<340	<250	<340	<330	<330	<320	<330	<320	<320	<320	<320	<320	<330	<320
bis(2-Chloroethyl)ether {I}	ug/Kg	<340	<250	<340	<93	<93	<98	<98	<100	<99	<98	<97	<98	<99	<99
bis(2-Chloroisopropyl)ether	ug/Kg	<340	<250	<340	<330	<330	<320	<330	<320	<320	<320	<320	<320	<330	<320
bis(2-Ethylhexyl)phthalate	ug/Kg	<700	**5000**	<700	<330	<330	<320	<330	<320	<320	<320	<320	<320	<330	<320
4-Bromophenyl phenylether	ug/Kg	<340	<250	<340	<330	<330	<320	<330	<320	<320	<320	<320	<320	<330	<320
Butyl benzyl phthalate	ug/Kg	<340	<250	<340	<330	<330	<320	<330	<320	<320	<320	<320	<320	<330	<320
Carbazole	ug/Kg	<340	<250	<340	<330	<330	<320	<330	<320	<320	<320	<320	<320	<330	<320
4-Chloroaniline	ug/Kg	<1400	<1000	<1400	<1700	<1700	<1700	<1700	<1500	<1700	<1700	<1700	<1700	<1700	<1700
4-Chloro-3-methylphenol	ug/Kg	<340	<250	<340	<330	<330	<320	<330	<320	<320	<320	<320	<320	<330	<320
beta-Chloronaphthalene	ug/Kg	<340	<250	<340	<330	<330	<320	<330	<320	<320	<320	<320	<320	<330	<320
2-Chlorophenol	ug/Kg	<340	<250	<340	<330	<330	<320	<330	<320	<320	<320	<320	<320	<330	<320

Table 1
Summary of Soil Analytical Results - MWD Property
Holland, Michigan

Sample Location		SB-OS-17	SB-OS-18	SB-OS-18	SB-OS-25	SB-OS-26	SB-OS-26	SB-OS-26	SB-OS-27	SB-OS-27	SB-OS-28	SB-OS-28	SB-OS-28	SB-OS-29	SB-OS-29
Lab Sample ID		0305078-02	0305078-03	0305078-04	0306200-01	0306200-02	0306200-03	0306200-04	0306200-05	0306200-06	0306200-24	0306200-25	0306200-26	0306200-21	0306200-22
Sampled By		Horizon	Horizon	Horizon	Horizon	Horizon	Horizon	Horizon	Horizon	Horizon	Horizon	Horizon	Horizon	Horizon	Horizon
Analyzed By		e-Lab	e-Lab	e-Lab	e-Lab	e-Lab	e-Lab	e-Lab	e-Lab	e-Lab	e-Lab	e-Lab	e-Lab	e-Lab	e-Lab
Sample Date		05/05/2003	05/05/2003	05/05/2003	06/12/2003	06/12/2003	06/12/2003	06/12/2003	06/12/2003	06/12/2003	06/13/2003	06/13/2003	06/13/2003	06/13/2003	06/13/2003
Sample Depth (ft.)		9.5'-10'	6.0'-6.5'	9.5'-10'	6'-6.5'	3.5'-4.0'	7.5'-8.0'	9.0'-9.5'	5.5'-6.0'	7.5'-8.0'	3.0'-3.5'	5.5'-6.0'	9.5'-10.0'	3.0'-3.5'	5.0'-5.5'
Semi-Volatiles Cont.	*Units*														
4-Chlorophenyl phenylether	ug/Kg	<340	<250	<340	<330	<330	<320	<330	<320	<320	<320	<320	<320	<330	<320
Chrysene {Q}	ug/Kg	**190**	<100	<140	**810**	**350**	<320	<330	<320	<320	<320	<320	<320	<330	<320
Dibenzo(a,h)anthracene {Q}	ug/Kg	<140	<100	<140	<330	<330	<320	<330	<320	<320	<320	<320	<320	<330	<320
Dibenzofuran	ug/Kg	<340	<250	<340	<330	<330	<320	<330	<320	<320	<320	<320	<320	<330	<320
1,2-Dichlorobenzene	ug/Kg	<340	<250	<340	<330	<330	<320	<330	<320	<320	<320	<320	<320	<330	<320
1,3-Dichlorobenzene	ug/Kg	<340	<250	<340	<330	<330	<320	<330	<320	<320	<320	<320	<320	<330	<320
1,4-Dichlorobenzene	ug/Kg	<340	<250	<340	<330	<330	<320	<330	<320	<320	<320	<320	<320	<330	<320
3,3'-Dichlorobenzidine	ug/Kg	<1400	<1000	<1400	<2000	<2000	<2000	<2000	<1900	<2000	<2000	<1900	<2000	<2000	<2000
2,4-Dichlorophenol	ug/Kg	<340	<250	<340	<330	<330	<320	<330	<320	<320	<320	<320	<320	<330	<320
Diethyl phthalate	ug/Kg	<700	<510	<700	<330	<330	<320	<330	<320	<320	<320	<320	<320	<330	<320
Dimethyl phthalate	ug/Kg	<700	<510	<700	<330	<330	<320	<330	<320	<320	<320	<320	<320	<330	<320
2,4-Dimethylphenol	ug/Kg	<700	<510	<700	<330	<330	<320	<330	<320	<320	<320	<320	<320	<330	<320
Di-n-butyl phthalate	ug/Kg	<700	<510	<700	<330	<330	<320	<330	<320	<320	<320	<320	<320	<330	<320
2,4-Dinitrophenol	ug/Kg	<1400	<1000	<1400	<1700	<1700	<1700	<1700	<1500	<1700	<1700	<1700	<1700	<1700	<1700
2,4-Dinitrotoluene	ug/Kg	<340	<250	<340	<330	<330	<320	<330	<320	<320	<320	<320	<320	<330	<320
2,6-Dinitrotoluene	ug/Kg	<340	<250	<340	<330	<330	<320	<330	<320	<320	<320	<320	<320	<330	<320
Di-n-octyl phthalate	ug/Kg	<340	<250	<340	<330	<330	<320	<330	<320	<320	<320	<320	<320	<330	<320
Dimethylformamide {I}	ug/Kg	---	---	---	---	---	---	---	---	---	---	---	---	---	---
5,5-Diphenylhydantoin	ug/Kg	**14000**	**1400**	**3800**	**840**	**340**	**26000**	**39000**	**3600**	**36000**	<320	**840**	**17000**	**400**	**13000**
Fluoranthene	ug/Kg	**160**	<100	**240**	**1800**	**760**	**340**	<330	<320	<320	<320	<320	<320	<330	<320
Fluorene	ug/Kg	<140	<100	<140	<330	<330	<320	<330	<320	<320	<320	<320	<320	<330	<320
Hexachlorobenzene (C-66)	ug/Kg	<340	<250	<340	<330	<330	<320	<330	<320	<320	<320	<320	<320	<330	<320
Hexachlorobutadiene (C-46)	ug/Kg	<340	<250	<340	<330	<330	<320	<330	<320	<320	<320	<320	<320	<330	<320
Hexachlorocyclopentadiene (C-56	ug/Kg	<700	<510	<700	<330	<330	<320	<330	<320	<320	<320	<320	<320	<330	<320
Hexachloroethane	ug/Kg	<340	<250	<340	<330	<330	<320	<330	<320	<320	<320	<320	<320	<330	<320
Indeno(1,2,3-cd)pyrene {Q}	ug/Kg	<140	<100	<140	**490**	<330	<320	<330	<320	<320	<320	<320	<320	<330	<320
Isophorone	ug/Kg	<340	<250	<340	<330	<330	<320	<330	<320	<320	<320	<320	<320	<330	<320
2-Methyl-4,6-dinitrophenol	ug/Kg	<700	<510	<700	<1700	<1700	<1700	<1700	<1500	<1700	<1700	<1700	<1700	<1700	<1700
2-Methylnaphthalene	ug/Kg	<340	<250	<340	<330	<330	<320	<330	<320	<320	<320	<320	<320	<330	<320
2-Methylphenol {J}	ug/Kg	<340	<250	<340	<330	<330	<320	<330	<320	<320	<320	<320	<320	<330	<320
4-Methylphenol {J}	ug/Kg	<340	<250	<340	<330	<330	<320	<330	<320	<320	<320	<320	<320	<330	<320
Naphthalene	ug/Kg	<140	<100	<140	<330	<330	<320	<330	<320	<320	<320	<320	<320	<330	<320
2-Nitroaniline	ug/Kg	<1400	<1000	<1400	<1700	<1700	<1700	<1700	<1500	<1700	<1700	<1700	<1700	<1700	<1700
3-Nitroaniline	ug/Kg	<1400	<1000	<1400	<1700	<1700	<1700	<1700	<1500	<1700	<1700	<1700	<1700	<1700	<1700
4-Nitroaniline	ug/Kg	<1400	<1000	<1400	<1700	<1700	<1700	<1700	<1500	<1700	<1700	<1700	<1700	<1700	<1700
Nitrobenzene {I}	ug/Kg	<340	<250	<340	<200	<200	<200	<200	<190	<200	<190	<190	<200	<190	<200
2-Nitrophenol	ug/Kg	<340	<250	<340	<330	<330	<320	<330	<320	<320	<320	<320	<320	<330	<320
4-Nitrophenol	ug/Kg	<1400	<1000	<1400	<1700	<1700	<1700	<1700	<1500	<1700	<1700	<1700	<1700	<1700	<1700
n-Nitroso-di-n-propylamine	ug/Kg	<340	<250	<340	<330	<330	<320	<330	<320	<320	<320	<320	<320	<330	<320
N-Nitrosodiphenylamine	ug/Kg	<340	<250	<340	<330	<330	<320	<330	<320	<320	<320	<320	<320	<330	<320
Pentachlorophenol	ug/Kg	<700	<510	<700	<790	<790	<780	<780	<800	<790	<780	<780	<770	<790	<780
Phenanthrene	ug/Kg	**180**	<100	**180**	**1200**	**640**	<320	<330	<320	<320	<320	<320	<320	<330	<320
Phenol	ug/Kg	<340	<250	<340	<330	<330	<320	<330	<320	<320	<320	<320	<320	<330	<320
Pyrene	ug/Kg	**210**	<100	**200**	**1300**	**710**	**330**	<330	<320	**370**	<320	<320	<320	<330	<320

Table 1
Summary of Soil Analytical Results - MWD Property
Holland, Michigan

Sample Location		SB-OS-17	SB-OS-18	SB-OS-18	SB-OS-25	SB-OS-26	SB-OS-26	SB-OS-26	SB-OS-27	SB-OS-27	SB-OS-28	SB-OS-28	SB-OS-28	SB-OS-29	SB-OS-29
Lab Sample ID		0305078-02	0305078-03	0305078-04	0306200-01	0306200-02	0306200-03	0306200-04	0306200-05	0306200-06	0306200-24	0306200-25	0306200-26	0306200-21	0306200-22
Sampled By		Horizon	Horizon	Horizon	Horizon	Horizon	Horizon	Horizon	Horizon	Horizon	Horizon	Horizon	Horizon	Horizon	Horizon
Analyzed By		e-Lab	e-Lab	e-Lab	e-Lab	e-Lab	e-Lab	e-Lab	e-Lab	e-Lab	e-Lab	e-Lab	e-Lab	e-Lab	e-Lab
Sample Date		05/05/2003	05/05/2003	05/05/2003	06/12/2003	06/12/2003	06/12/2003	06/12/2003	06/12/2003	06/12/2003	06/13/2003	06/13/2003	06/13/2003	06/13/2003	06/13/2003
Sample Depth (ft.)		9.5'-10'	6.0'-6.5'	9.5'-10'	6'-6.5'	3.5'-4.0'	7.5'-8.0'	9.0'-9.5'	5.5'-6.0'	7.5'-8.0'	3.0'-3.5'	5.5'-6.0'	9.5'-10.0'	3.0'-3.5'	5.0'-5.5'
Semi-Volatiles Cont.	*Units*														
1,2,4-Trichlorobenzene	ug/Kg	<340	<250	<340	<330	<330	<320	<330	<320	<320	<320	<320	<320	<330	<320
2,4,5-Trichlorophenol	ug/Kg	<340	<250	<340	<330	<330	<320	<330	<320	<320	<320	<320	<320	<330	<320
2,4,6-Trichlorophenol	ug/Kg	<340	<250	<340	<330	<330	<320	<330	<320	<320	<320	<320	<320	<330	<320
Volatiles	*Units*														
Acetone {I}	ug/Kg	**2100**	<790	<1400	<740	<740	<910	<1300	<810	<1100	<750	<740	<1500	<740	<270
Benzene {I}	ug/Kg	<120	<53	<94	<50	<50	<61	<88	<54	<73	<50	<48	<100	<49	<55
Bromodichloromethane	ug/Kg	<240	<110	<190	<100	<100	<120	<180	<110	<150	<100	<97	<200	<100	<110
Bromoform	ug/Kg	<240	<110	<190	<100	<100	<120	<180	<110	<150	<100	<97	<200	<100	<110
Bromomethane	ug/Kg	<600	<260	<470	<240	<240	<300	<1500	<270	<370	<240	<240	<500	<250	<270
2-Butanone (MEK) {I}	ug/Kg	<600	<260	<470	<740	<740	<750	<1500	<2200	<750	<750	<740	<730	<740	<750
Carbon disulfide {I,R}	ug/Kg	<600	<260	<470	<240	<240	<300	<1500	<270	<370	<240	<240	<500	<250	<270
Carbon tetrachloride	ug/Kg	<120	<53	<94	<50	<50	<61	<88	<54	<73	<50	<48	<100	<49	<55
Chlorobenzene {I}	ug/Kg	**5800**	**99**	**3700**	<50	<50	**380**	**1700**	**380**	**1200**	<50	<48	**2000**	<49	**310**
Chloroethane	ug/Kg	<600	<260	<470	<240	<240	<300	<1500	<270	<370	<240	<240	<500	<250	<270
Chloroform	ug/Kg	<120	<53	<94	<50	<50	<61	<88	<54	<73	<50	<48	<100	<49	<55
Chloromethane {I}	ug/Kg	<600	<260	<470	<240	<240	<300	<1500	<270	<370	<240	<240	<500	<250	<270
Dibromochloromethane	ug/Kg	<240	<110	<190	<100	<100	<120	<180	<110	<150	<100	<97	<200	<100	<110
1,1-Dichloroethane	ug/Kg	<120	<53	<94	<50	<50	<61	<88	<54	<73	<50	<48	<100	<49	<55
1,2-Dichloroethane {I}	ug/Kg	<120	<53	<94	<50	<50	<61	<88	<54	<73	<50	<48	<100	<49	<55
1,1-Dichloroethylene {I}	ug/Kg	<120	<53	<94	<50	<50	<61	<88	<54	<73	<50	<48	<100	<49	<55
1,2-Dichloroethylene {I}	ug/Kg	<240	<110	<190	<100	<100	<120	<180	<110	<150	<100	<97	<200	<100	<110
cis-1,2-Dichloroethylene {I}	ug/Kg	<120	<53	<94	<50	<50	<61	<88	<54	<73	<50	<48	<100	<49	<55
trans-1,2-Dichloroethylene	ug/Kg	<120	<53	<94	<50	<50	<61	<88	<54	<73	<50	<48	<100	<49	<55
1,2-Dichloropropane {I}	ug/Kg	<120	<53	<94	<50	<50	<61	<88	<54	<73	<50	<48	<100	<49	<55
cis-1,3-Dichloropropene {J}	ug/Kg	<120	<53	<94	<50	<50	<61	<88	<54	<73	<50	<48	<100	<49	<55
1,3-Dichloropropene, total {J}	ug/Kg	<240	<110	<190	<100	<100	<120	<180	<110	<150	<100	<97	<200	<100	<110
trans-1,3-Dichloropropene {J}	ug/Kg	<120	<53	<94	<50	<50	<61	<88	<54	<73	<50	<48	<100	<49	<55
Ethyl acetate {I}	ug/Kg	---	---	---	---	---	---	---	---	---	---	---	---	---	---
Ethylbenzene {I}	ug/Kg	<120	<53	<94	<50	<50	<61	<88	<54	<73	<50	<48	<100	<49	<55
Hexane {I}	ug/Kg	---	---	---	---	---	---	---	---	---	---	---	---	---	---
2-Hexanone {I}	ug/Kg	<600	<260	<470	<2400	<2400	<2400	<1500	<2500	<2400	<2400	<2400	<2500	<2200	<2400
Methylene chloride	ug/Kg	<600	<260	<470	<240	<240	<300	<1500	<270	<370	<240	<240	<500	<250	<270
4-Methyl-2-pentanone (MIBK) {I}	ug/Kg	<600	<260	<470	<2400	<2400	<2400	<1500	<2500	<2400	<2400	<2400	<2500	<2200	<2400
Styrene {I}	ug/Kg	<120	<53	<94	<50	<50	<61	<88	<54	<73	<50	<48	<100	<49	<55
1,1,2,2-Tetrachloroethane	ug/Kg	<240	<110	<190	<100	<100	<120	<180	<110	<150	<100	<97	<200	<100	<110
Tetrachloroethylene	ug/Kg	<120	<53	<94	<50	<50	<61	<88	<54	<73	<50	<48	<100	<49	<55
Toluene {I}	ug/Kg	<120	<53	<94	<50	<50	<61	<88	<54	<73	<50	<48	<100	<49	<55
1,1,1-Trichloroethane	ug/Kg	<120	<53	<94	<50	<50	<61	<88	<54	<73	<50	<48	<100	<49	<55
1,1,2-Trichloroethane	ug/Kg	<120	<53	<94	<50	<50	<61	<88	<54	<73	<50	<48	<100	<49	<55
Trichloroethylene	ug/Kg	<120	<53	<94	<50	<50	<61	<88	<54	<73	<50	<48	<100	<49	<55
Vinyl chloride	ug/Kg	<240	<110	<190	<100	<100	<120	<180	<110	<150	<100	<97	<200	<100	<110
Xylene (Total) {I}	ug/Kg	**720**	<160	**960**	<150	<150	<180	<260	<160	<220	<150	<150	**570**	<140	<160
Xylene, o {I}	ug/Kg	**240**	<53	**140**	<50	<50	<61	<88	<54	<73	<50	<48	**190**	<49	<55
Xylene, p&m {I}	ug/Kg	**480**	**120**	**820**	<100	<100	<120	<180	<110	<150	<100	<97	**380**	<100	<110

Table 1
Summary of Soil Analytical Results - MWD Property
Holland, Michigan

Sample Location		SB-OS-29	SB-OS-30	SB-OS-30	SB-OS-30	SB-OS-31	SB-OS-31	SB-OS-31	SB-OS-32	SB-OS-32	SB-OS-32	SB-OS-33	SB-OS-33	SB-OS-34	SB-OS-34
Lab Sample ID		0306200-23	0306200-27	0306200-28	0306200-29	0306200-18	0306200-19	0306200-20	0306200-15	0306200-16	0306200-17	0306200-13	0306200-14	0306200-11	0306200-12
Sampled By		Horizon	Horizon	Horizon	Horizon	Horizon	Horizon	Horizon	Horizon	Horizon	Horizon	Horizon	Horizon	Horizon	Horizon
Analyzed By		e-Lab	e-Lab	e-Lab	e-Lab	e-Lab	e-Lab	e-Lab	e-Lab	e-Lab	e-Lab	e-Lab	e-Lab	e-Lab	e-Lab
Sample Date		06/13/2003	06/13/2003	06/13/2003	06/13/2003	06/13/2003	06/13/2003	06/13/2003	06/13/2003	06/13/2003	06/13/2003	06/13/2003	06/13/2003	06/13/2003	06/13/2003
Sample Depth (ft.)		6.5'-7.0'	3.5'-4.0'	6.0'-6.5'	9.0'-9.5'	3.0'-3.5'	4.5'-5.5'	6.5'-7.0'	3.5'-4.0'	5.0'-5.5'	7.0'-7.5'	5.0'-5.5'	7.5'-8.0'	3.5'-4.0'	7.0'-7.5'
Inorganics	*Units*														
Arsenic	mg/Kg	---	---	---	---	---	---	---	---	---	---	---	---	---	---
Barium {B}	mg/Kg	---	---	---	---	---	---	---	---	---	---	---	---	---	---
Cadmium {B}	mg/Kg	---	---	---	---	---	---	---	---	---	---	---	---	---	---
Chromium, Total	mg/Kg	---	---	---	---	---	---	---	---	---	---	---	---	---	---
Copper {B}	mg/Kg	---	---	---	---	---	---	---	---	---	---	---	---	---	---
Lead {B}	mg/Kg	---	---	---	---	---	---	---	---	---	---	---	---	---	---
Mercury, Total {B,Z}	mg/Kg	---	---	---	---	---	---	---	---	---	---	---	---	---	---
Selenium {B}	mg/Kg	---	---	---	---	---	---	---	---	---	---	---	---	---	---
Silver {B}	mg/Kg	---	---	---	---	---	---	---	---	---	---	---	---	---	---
Zinc {B}	mg/Kg	---	---	---	---	---	---	---	---	---	---	---	---	---	---
Misc.	*Units*														
Isopropyl alcohol {I}	mg/Kg	---	---	---	---	---	---	---	---	---	---	---	---	---	---
Methanol {I}	mg/Kg	---	---	---	---	---	---	---	---	---	---	---	---	---	---
Percent Moisture	%	**29**	**13**	**34**	**60**	**12**	**36**	**16**	**24**	**36**	**12**	**13**	**22**	**7.2**	**38**
PCB's	*Units*														
Aroclor 1016 {J,T}	ug/Kg	<320	<330	<330	<330	<330	<330	<330	<310	<330	<330	<330	<320	<330	<330
Aroclor 1221 {J,T}	ug/Kg	<320	<330	<330	<330	<330	<330	<330	<310	<330	<330	<330	<320	<330	<330
Aroclor 1232 {J,T}	ug/Kg	<320	<330	<330	<330	<330	<330	<330	<310	<330	<330	<330	<320	<330	<330
Aroclor 1242 {J,T}	ug/Kg	<320	<330	<330	<330	<330	<330	<330	<310	<330	<330	<330	<320	<330	<330
Aroclor 1248 {J,T}	ug/Kg	<320	<330	<330	<330	<330	<330	<330	<310	<330	<330	<330	<320	<330	<330
Aroclor 1254 {J,T}	ug/Kg	<320	<330	<330	<330	<330	<330	<330	<310	<330	<330	<330	<320	<330	<330
Aroclor 1260 {J,T}	ug/Kg	<320	<330	<330	<330	<330	<330	<330	<310	<330	<330	<330	<320	<330	<330
Semi-Volatiles	*Units*														
Acenaphthene	ug/Kg	<320	<320	<330	<320	<330	<320	<330	<320	<330	<330	<330	<310	<330	<320
Acenaphthylene	ug/Kg	<320	<320	<330	<320	<330	<320	<330	<320	<330	<330	<330	<310	<330	<320
Aniline	ug/Kg	<1700	<1700	<1700	<1700	<1700	<1700	<1700	<1700	<1700	<1700	<1700	<1700	<1700	<1700
Anthracene	ug/Kg	<320	<320	<330	<320	<330	<320	<330	<320	<330	<330	<330	<310	<330	<320
Benzo(a)anthracene {Q}	ug/Kg	<320	<320	<330	<8200	<330	<320	<330	<320	<330	<330	<330	<310	<330	<320
Benzo(a)pyrene {Q}	ug/Kg	<320	<320	<330	<8200	<330	<320	<330	<320	<330	<330	<330	<310	<330	<320
Benzo(b)fluoranthene {Q}	ug/Kg	<320	<320	<330	<8200	<330	<320	<330	<320	<330	<330	<330	<310	<330	<320
Benzo(g,h,i)perylene	ug/Kg	<320	<320	<330	<8200	<330	<320	<330	<320	<330	<330	<330	<310	<330	<320
Benzo(k)fluoranthene {Q}	ug/Kg	<320	<320	<330	<8200	<330	<320	<330	<320	<330	<330	<330	<310	<330	<320
Benzophenone	ug/Kg	<320	<320	<330	<320	<330	<320	<330	<320	<330	<330	<330	<310	<330	<320
bis(2-Chloroethoxy)methane	ug/Kg	<320	<320	<330	<320	<330	<320	<330	<320	<330	<330	<330	<310	<330	<320
bis(2-Chloroethyl)ether {I}	ug/Kg	<98	<100	<99	<110	<100	<97	<100	<100	<100	<100	<100	<97	<99	<100
bis(2-Chloroisopropyl)ether	ug/Kg	<320	<320	<330	<320	<330	<320	<330	<320	<330	<330	<330	<310	<330	<320
bis(2-Ethylhexyl)phthalate	ug/Kg	<320	<320	<330	<8200	<330	<320	<330	<320	<330	<330	<330	<310	<330	<320
4-Bromophenyl phenylether	ug/Kg	<320	<320	<330	<320	<330	<320	<330	<320	<330	<330	<330	<310	<330	<320
Butyl benzyl phthalate	ug/Kg	<320	<320	<330	<8200	<330	<320	<330	<320	<330	<330	<330	<310	<330	<320
Carbazole	ug/Kg	<320	<320	<330	<320	<330	<320	<330	<320	<330	<330	<330	<310	<330	<320
4-Chloroaniline	ug/Kg	<1700	<1700	<1700	<1700	<1700	<1700	<1700	<1700	<1700	<1700	<1700	<1700	<1700	<1700
4-Chloro-3-methylphenol	ug/Kg	<320	<320	<330	<320	<330	<320	<330	<320	<330	<330	<330	<310	<330	<320
beta-Chloronaphthalene	ug/Kg	<320	<320	<330	<320	<330	<320	<330	<320	<330	<330	<330	<310	<330	<320
2-Chlorophenol	ug/Kg	<320	<320	<330	<320	<330	<320	<330	<320	<330	<330	<330	<310	<330	<320

Table 1
Summary of Soil Analytical Results - MWD Property
Holland, Michigan

Sample Location		SB-OS-29	SB-OS-30	SB-OS-30	SB-OS-30	SB-OS-31	SB-OS-31	SB-OS-31	SB-OS-32	SB-OS-32	SB-OS-32	SB-OS-33	SB-OS-33	SB-OS-34	SB-OS-34
Lab Sample ID		0306200-23	0306200-27	0306200-28	0306200-29	0306200-18	0306200-19	0306200-20	0306200-15	0306200-16	0306200-17	0306200-13	0306200-14	0306200-11	0306200-12
Sampled By		Horizon	Horizon	Horizon	Horizon	Horizon	Horizon	Horizon	Horizon	Horizon	Horizon	Horizon	Horizon	Horizon	Horizon
Analyzed By		e-Lab	e-Lab	e-Lab	e-Lab	e-Lab	e-Lab	e-Lab	e-Lab	e-Lab	e-Lab	e-Lab	e-Lab	e-Lab	e-Lab
Sample Date		06/13/2003	06/13/2003	06/13/2003	06/13/2003	06/13/2003	06/13/2003	06/13/2003	06/13/2003	06/13/2003	06/13/2003	06/13/2003	06/13/2003	06/13/2003	06/13/2003
Sample Depth (ft.)		6.5'-7.0'	3.5'-4.0'	6.0'-6.5'	9.0'-9.5'	3.0'-3.5'	4.5'-5.5'	6.5'-7.0'	3.5'-4.0'	5.0'-5.5'	7.0'-7.5'	5.0'-5.5'	7.5'-8.0'	3.5'-4.0'	7.0'-7.5'
Semi-Volatiles Cont.	*Units*														
4-Chlorophenyl phenylether	ug/Kg	<320	<320	<330	<320	<330	<320	<330	<320	<330	<330	<330	<310	<330	<320
Chrysene {Q}	ug/Kg	<320	<320	<330	<8200	<330	<320	<330	<320	<330	<330	<330	<310	<330	<320
Dibenzo(a,h)anthracene {Q}	ug/Kg	<320	<320	<330	<8200	<330	<320	<330	<320	<330	<330	<330	<310	<330	<320
Dibenzofuran	ug/Kg	<320	<320	<330	<320	<330	<320	<330	<320	<330	<330	<330	<310	<330	<320
1,2-Dichlorobenzene	ug/Kg	<320	<320	<330	<320	<330	<320	<330	<320	<330	<330	<330	<310	<330	<320
1,3-Dichlorobenzene	ug/Kg	<320	<320	<330	<320	<330	<320	<330	<320	<330	<330	<330	<310	<330	<320
1,4-Dichlorobenzene	ug/Kg	<320	<320	<330	<320	<330	<320	<330	<320	<330	<330	<330	<310	<330	<320
3,3'-Dichlorobenzidine	ug/Kg	<2000	<2000	<2000	<50000	<2000	<1900	<2000	<2000	<2000	<2000	<2000	<1900	<2000	<2000
2,4-Dichlorophenol	ug/Kg	<320	<320	<330	<320	<330	<320	<330	<320	<330	<330	<330	<310	<330	<320
Diethyl phthalate	ug/Kg	<320	<320	<330	<320	<330	<320	<330	<320	<330	<330	<330	<310	<330	<320
Dimethyl phthalate	ug/Kg	<320	<320	<330	<320	<330	<320	<330	<320	<330	<330	<330	<310	<330	<320
2,4-Dimethylphenol	ug/Kg	<320	<320	<330	<320	<330	<320	<330	<320	<330	<330	<330	<310	<330	<320
Di-n-butyl phthalate	ug/Kg	<320	<320	<330	<320	<330	<320	<330	<320	<330	<330	<330	<310	<330	<320
2,4-Dinitrophenol	ug/Kg	<1700	<1700	<1700	<1700	<1700	<1700	<1700	<1700	<1700	<1700	<1700	<1700	<1700	<1700
2,4-Dinitrotoluene	ug/Kg	<320	<320	<330	<320	<330	<320	<330	<320	<330	<330	<330	<310	<330	<320
2,6-Dinitrotoluene	ug/Kg	<320	<320	<330	<320	<330	<320	<330	<320	<330	<330	<330	<310	<330	<320
Di-n-octyl phthalate	ug/Kg	<320	<320	<330	<8200	<330	<320	<330	<320	<330	<330	<330	<310	<330	<320
Dimethylformamide {I}	ug/Kg	---	---	---	---	---	---	---	---	---	---	---	---	---	---
5,5-Diphenylhydantoin	ug/Kg	**10000**	<320	**3100**	**43000**	<330	**20000**	**650**	**440**	**2400**	**380**	**470**	**570**	<330	**2500**
Fluoranthene	ug/Kg	<320	<320	<330	<320	<330	<320	<330	<320	<330	<330	<330	<310	<330	<320
Fluorene	ug/Kg	<320	<320	<330	<320	<330	<320	<330	<320	<330	<330	<330	<310	<330	<320
Hexachlorobenzene (C-66)	ug/Kg	<320	<320	<330	<320	<330	<320	<330	<320	<330	<330	<330	<310	<330	<320
Hexachlorobutadiene (C-46)	ug/Kg	<320	<320	<330	<320	<330	<320	<330	<320	<330	<330	<330	<310	<330	<320
Hexachlorocyclopentadiene (C-56	ug/Kg	<320	<320	<330	<320	<330	<320	<330	<320	<330	<330	<330	<310	<330	<320
Hexachloroethane	ug/Kg	<320	<320	<330	<320	<330	<320	<330	<320	<330	<330	<330	<310	<330	<320
Indeno(1,2,3-cd)pyrene {Q}	ug/Kg	<320	<320	<330	<8200	<330	<320	<330	<320	<330	<330	<330	<310	<330	<320
Isophorone	ug/Kg	<320	<320	<330	<320	<330	<320	<330	<320	<330	<330	<330	<310	<330	<320
2-Methyl-4,6-dinitrophenol	ug/Kg	<1700	<1700	<1700	<1700	<1700	<1700	<1700	<1700	<1700	<1700	<1700	<1700	<1700	<1700
2-Methylnaphthalene	ug/Kg	<320	<320	<330	<320	<330	<320	<330	<320	<330	<330	<330	<310	<330	<320
2-Methylphenol {J}	ug/Kg	<320	<320	<330	<320	<330	<320	<330	<320	<330	<330	<330	<310	<330	<320
4-Methylphenol {J}	ug/Kg	<320	<320	<330	<320	<330	<320	<330	<320	<330	<330	<330	<310	<330	<320
Naphthalene	ug/Kg	<320	<320	<330	<320	<330	<320	<330	<320	<330	<330	<330	<310	<330	<320
2-Nitroaniline	ug/Kg	<1700	<1700	<1700	<1700	<1700	<1700	<1700	<1700	<1700	<1700	<1700	<1700	<1700	<1700
3-Nitroaniline	ug/Kg	<1700	<1700	<1700	<1700	<1700	<1700	<1700	<1700	<1700	<1700	<1700	<1700	<1700	<1700
4-Nitroaniline	ug/Kg	<1700	<1700	<1700	<1700	<1700	<1700	<1700	<1700	<1700	<1700	<1700	<1700	<1700	<1700
Nitrobenzene {I}	ug/Kg	<190	<200	<200	<200	<200	<190	<200	<200	<200	<200	<200	<190	<200	<200
2-Nitrophenol	ug/Kg	<320	<320	<330	<320	<330	<320	<330	<320	<330	<330	<330	<310	<330	<320
4-Nitrophenol	ug/Kg	<1700	<1700	<1700	<1700	<1700	<1700	<1700	<1700	<1700	<1700	<1700	<1700	<1700	<1700
n-Nitroso-di-n-propylamine	ug/Kg	<320	<320	<330	<320	<330	<320	<330	<320	<330	<330	<330	<310	<330	<320
N-Nitrosodiphenylamine	ug/Kg	<320	<320	<330	<320	<330	<320	<330	<320	<330	<330	<330	<310	<330	<320
Pentachlorophenol	ug/Kg	<770	<790	<780	<800	<800	<780	<800	<800	<790	<800	<800	<780	<800	<800
Phenanthrene	ug/Kg	<320	<320	<330	<320	<330	<320	<330	<320	<330	<330	<330	<310	<330	<320
Phenol	ug/Kg	<320	<320	<330	<320	<330	<320	<330	<320	<330	<330	<330	<310	<330	<320
Pyrene	ug/Kg	<320	<320	<330	<8200	<330	<320	<330	<320	<330	<330	<330	<310	<330	<320

Table 1
Summary of Soil Analytical Results - MWD Property
Holland, Michigan

Sample Location		SB-OS-29	SB-OS-30	SB-OS-30	SB-OS-30	SB-OS-31	SB-OS-31	SB-OS-31	SB-OS-32	SB-OS-32	SB-OS-32	SB-OS-33	SB-OS-33	SB-OS-34	SB-OS-34
Lab Sample ID		0306200-23	0306200-27	0306200-28	0306200-29	0306200-18	0306200-19	0306200-20	0306200-15	0306200-16	0306200-17	0306200-13	0306200-14	0306200-11	0306200-12
Sampled By		Horizon	Horizon	Horizon	Horizon	Horizon	Horizon	Horizon	Horizon	Horizon	Horizon	Horizon	Horizon	Horizon	Horizon
Analyzed By		e-Lab	e-Lab	e-Lab	e-Lab	e-Lab	e-Lab	e-Lab	e-Lab	e-Lab	e-Lab	e-Lab	e-Lab	e-Lab	e-Lab
Sample Date		06/13/2003	06/13/2003	06/13/2003	06/13/2003	06/13/2003	06/13/2003	06/13/2003	06/13/2003	06/13/2003	06/13/2003	06/13/2003	06/13/2003	06/13/2003	06/13/2003
Sample Depth (ft.)		6.5'-7.0'	3.5'-4.0'	6.0'-6.5'	9.0'-9.5'	3.0'-3.5'	4.5'-5.5'	6.5'-7.0'	3.5'-4.0'	5.0'-5.5'	7.0'-7.5'	5.0'-5.5'	7.5'-8.0'	3.5'-4.0'	7.0'-7.5'
Semi-Volatiles Cont.	*Units*														
1,2,4-Trichlorobenzene	ug/Kg	<320	<320	<330	<320	<330	<320	<330	<320	<330	<330	<330	<310	<330	<320
2,4,5-Trichlorophenol	ug/Kg	<320	<320	<330	<320	<330	<320	<330	<320	<330	<330	<330	<310	<330	<320
2,4,6-Trichlorophenol	ug/Kg	<320	<320	<330	<320	<330	<320	<330	<320	<330	<330	<330	<310	<330	<320
Volatiles	*Units*														
Acetone {I}	ug/Kg	<750	<750	<740	<1900	<750	<1100	<750	<750	<810	<750	<750	<750	<740	<790
Benzene {I}	ug/Kg	<49	<50	<50	<120	<49	<71	<49	<50	<54	<50	<50	<49	<50	<53
Bromodichloromethane	ug/Kg	<99	<99	<100	<250	<100	<140	<100	<100	<110	<100	<100	<100	<100	<110
Bromoform	ug/Kg	<99	<99	<100	<250	<100	<140	<100	<100	<110	<100	<100	<100	<100	<110
Bromomethane	ug/Kg	<250	<250	<250	<620	<250	<350	<250	<250	<270	<250	<250	<250	<240	<260
2-Butanone (MEK) {I}	ug/Kg	<750	<750	<740	<740	<750	<730	<750	<750	<740	<750	<750	<750	<740	<260
Carbon disulfide {I,R}	ug/Kg	<250	<250	<250	<620	<250	<350	<250	<250	<270	<250	<250	<250	<240	<260
Carbon tetrachloride	ug/Kg	<49	<50	<50	<120	<49	<71	<49	<50	<54	<50	<50	<49	<50	<53
Chlorobenzene {I}	ug/Kg	<49	<50	**370**	**890**	<49	**170**	<49	<50	<54	<50	<50	<49	<50	<53
Chloroethane	ug/Kg	<250	<250	<250	<620	<250	<350	<250	<250	<270	<250	<250	<250	<240	<260
Chloroform	ug/Kg	<49	<50	<50	<120	<49	<71	<49	<50	<54	<50	<50	<49	<50	<53
Chloromethane {I}	ug/Kg	<250	<250	<250	<620	<250	<350	<250	<250	<270	<250	<250	<250	<240	<260
Dibromochloromethane	ug/Kg	<99	<99	<100	<250	<100	<140	<100	<100	<110	<100	<100	<100	<100	<110
1,1-Dichloroethane	ug/Kg	<49	<50	<50	<120	<49	<71	<49	<50	<54	<50	<50	<49	<50	<53
1,2-Dichloroethane {I}	ug/Kg	<49	<50	<50	<120	<49	<71	<49	<50	<54	<50	<50	<49	<50	<53
1,1-Dichloroethylene {I}	ug/Kg	<49	<50	<50	<120	<49	<71	<49	<50	<54	<50	<50	<49	<50	<53
1,2-Dichloroethylene {I}	ug/Kg	<99	<99	<100	<250	<100	<140	<100	<100	<110	<100	<100	<100	<100	<110
cis-1,2-Dichloroethylene {I}	ug/Kg	<49	<50	<50	<120	<49	<71	<49	<50	<54	<50	<50	<49	<50	<53
trans-1,2-Dichloroethylene	ug/Kg	<49	<50	<50	<120	<49	<71	<49	<50	<54	<50	<50	<49	<50	<53
1,2-Dichloropropane {I}	ug/Kg	<49	<50	<50	<120	<49	<71	<49	<50	<54	<50	<50	<49	<50	<53
cis-1,3-Dichloropropene {J}	ug/Kg	<49	<50	<50	<120	<49	<71	<49	<50	<54	<50	<50	<49	<50	<53
1,3-Dichloropropene, total {J}	ug/Kg	<99	<99	<100	<250	<100	<140	<100	<100	<110	<100	<100	<100	<100	<110
trans-1,3-Dichloropropene {J}	ug/Kg	<49	<50	<50	<120	<49	<71	<49	<50	<54	<50	<50	<49	<50	<53
Ethyl acetate {I}	ug/Kg	---	---	---	---	---	---	---	---	---	---	---	---	---	---
Ethylbenzene {I}	ug/Kg	<49	<50	<50	<120	<49	<71	<49	<50	<54	<50	<50	<49	<50	<53
Hexane {I}	ug/Kg	---	---	---	---	---	---	---	---	---	---	---	---	---	---
2-Hexanone {I}	ug/Kg	<2500	<2500	<2500	<2500	<2500	<5200	<2200	<2500	<2500	<2500	<2500	<2500	<2400	<2500
Methylene chloride	ug/Kg	<250	<250	<250	**660**	<250	<350	<250	<250	<270	<250	<250	<250	<240	<260
4-Methyl-2-pentanone (MIBK) {I}	ug/Kg	<2500	<2500	<2500	<2500	<2500	<5200	<2200	<2500	<2500	<2500	<2500	<2500	<2400	<2500
Styrene {I}	ug/Kg	<49	<50	<50	<120	<49	<71	<49	<50	<54	<50	<50	<49	<50	<53
1,1,2,2-Tetrachloroethane	ug/Kg	<99	<99	<100	<250	<100	<140	<100	<100	<110	<100	<100	<100	<100	<110
Tetrachloroethylene	ug/Kg	<49	<50	<50	<120	<49	<71	<49	<50	<54	<50	<50	<49	<50	<53
Toluene {I}	ug/Kg	<49	<50	<50	<120	<49	<71	<49	<50	<54	<50	<50	<49	<50	<53
1,1,1-Trichloroethane	ug/Kg	<49	<50	<50	<120	<49	<71	<49	<50	<54	<50	<50	<49	<50	<53
1,1,2-Trichloroethane	ug/Kg	<49	<50	<50	<120	<49	<71	<49	<50	<54	<50	<50	<49	<50	<53
Trichloroethylene	ug/Kg	<49	<50	<50	<120	<49	<71	<49	<50	<54	<50	<50	<49	<50	<53
Vinyl chloride	ug/Kg	<99	<99	<100	<250	<100	<140	<100	<100	<110	<100	<100	<100	<100	<110
Xylene (Total) {I}	ug/Kg	<150	<150	<150	<540	<150	<210	<140	<130	<160	<150	<150	<150	<150	<160
Xylene, o {I}	ug/Kg	<49	<50	<50	<120	<49	<71	<49	<50	<54	<50	<50	<49	<50	<53
Xylene, p&m {I}	ug/Kg	<99	<99	<100	<250	<100	<140	<100	**130**	<110	<100	<100	<100	<100	<110

Table 1
Summary of Soil Analytical Results - MWD Property
Holland, Michigan

Sample Location		SB-OS-35	SB-OS-35	SB-OS-36	SB-OS-36	SVW-1	SVW-2B	VF-26	VF-28	VF-30	VF-32	VF-34	VF-36	VF-38	VF-40
Lab Sample ID		0306200-09	0306200-10	0306200-07	0306200-08	0308244-01	0308414-01	0307199-02	0307243-01	0307243-03	0307243-05	0307324-01	0307324-03	0307324-05	0307344-05
Sampled By		Horizon	Horizon	Horizon	Horizon	Horizon	Horizon	Horizon	Horizon	Horizon	Horizon	Horizon	Horizon	Horizon	Horizon
Analyzed By		e-Lab	e-Lab	e-Lab	e-Lab	e-Lab	e-Lab	e-Lab	e-Lab	e-Lab	e-Lab	e-Lab	e-Lab	e-Lab	e-Lab
Sample Date		06/13/2003	06/13/2003	06/13/2003	06/13/2003	08/18/2003	08/27/2003	07/15/2003	07/17/2003	07/17/2003	07/17/2003	07/23/2003	07/23/2003	07/23/2003	07/24/2003
Sample Depth (ft.)		3.0'-3.5'	6.0'-6.5'	5.5'-6.0'	7.5'-8.0'										
Inorganics	*Units*														
Arsenic	mg/Kg	---	---	---	---	---	---	---	---	---	---	---	---	---	---
Barium {B}	mg/Kg	---	---	---	---	---	---	---	---	---	---	---	---	---	---
Cadmium {B}	mg/Kg	---	---	---	---	---	---	---	---	---	---	---	---	---	---
Chromium, Total	mg/Kg	---	---	---	---	---	---	---	---	---	---	---	---	---	---
Copper {B}	mg/Kg	---	---	---	---	---	---	---	---	---	---	---	---	---	---
Lead {B}	mg/Kg	---	---	---	---	---	---	---	---	---	---	---	---	---	---
Mercury, Total {B,Z}	mg/Kg	---	---	---	---	---	---	---	---	---	---	---	---	---	---
Selenium {B}	mg/Kg	---	---	---	---	---	---	---	---	---	---	---	---	---	---
Silver {B}	mg/Kg	---	---	---	---	---	---	---	---	---	---	---	---	---	---
Zinc {B}	mg/Kg	---	---	---	---	---	---	---	---	---	---	---	---	---	---
Misc.	*Units*														
Isopropyl alcohol {I}	mg/Kg	---	---	---	---	---	---	---	---	---	---	---	---	---	---
Methanol {I}	mg/Kg	---	---	---	---	---	---	---	---	---	---	---	---	---	---
Percent Moisture	%	**7.6**	**25**	**12**	**27**	**7.8**	**4.1**	**17**	**17**	**26**	**19**	**15**	**18**	**17**	**16**
PCB's	*Units*														
Aroclor 1016 {J,T}	ug/Kg	<330	<330	<330	<330	<330	<330	<48	<47	<53	<49	<46	<49	<48	<48
Aroclor 1221 {J,T}	ug/Kg	<330	<330	<330	<330	<330	<330	<48	<47	<53	<49	<46	<49	<48	<48
Aroclor 1232 {J,T}	ug/Kg	<330	<330	<330	<330	<330	<330	<48	<47	<53	<49	<46	<49	<48	<48
Aroclor 1242 {J,T}	ug/Kg	<330	<330	<330	<330	<330	<330	<48	<47	<53	<49	<46	<49	<48	<48
Aroclor 1248 {J,T}	ug/Kg	**2500**	<330	**1500**	<330	**880**	<330	<48	<47	<53	<49	<46	<49	**510**	<48
Aroclor 1254 {J,T}	ug/Kg	<330	<330	<330	<330	<330	<330	<48	<47	<53	<49	<46	<49	<48	<48
Aroclor 1260 {J,T}	ug/Kg	<330	<330	<330	<330	<330	<330	<48	<47	<53	<49	<46	<49	<48	<48
Semi-Volatiles	*Units*														
Acenaphthene	ug/Kg	<320	<330	<330	<320	<330	---	---	---	---	---	---	---	---	---
Acenaphthylene	ug/Kg	<320	<330	<330	<320	<330	---	---	---	---	---	---	---	---	---
Aniline	ug/Kg	<1700	<1600	<1700	<1700	<1700	---	---	---	---	---	---	---	---	---
Anthracene	ug/Kg	<320	<330	<330	<320	<330	---	---	---	---	---	---	---	---	---
Benzo(a)anthracene {Q}	ug/Kg	<320	<330	<330	<320	<330	---	---	---	---	---	---	---	---	---
Benzo(a)pyrene {Q}	ug/Kg	<320	<330	<330	<320	<330	---	---	---	---	---	---	---	---	---
Benzo(b)fluoranthene {Q}	ug/Kg	<320	<330	<330	<320	<330	---	---	---	---	---	---	---	---	---
Benzo(g,h,i)perylene	ug/Kg	<320	<330	<330	<320	<330	---	---	---	---	---	---	---	---	---
Benzo(k)fluoranthene {Q}	ug/Kg	<320	<330	<330	<320	<330	---	---	---	---	---	---	---	---	---
Benzophenone	ug/Kg	<320	<330	<330	<320	<360	---	---	---	---	---	---	---	---	---
bis(2-Chloroethoxy)methane	ug/Kg	<320	<330	<330	<320	<330	---	---	---	---	---	---	---	---	---
bis(2-Chloroethyl)ether {I}	ug/Kg	<94	<100	<100	<99	<330	---	---	---	---	---	---	---	---	---
bis(2-Chloroisopropyl)ether	ug/Kg	<320	<330	<330	<320	<330	---	---	---	---	---	---	---	---	---
bis(2-Ethylhexyl)phthalate	ug/Kg	<320	<330	<330	<320	<330	---	---	---	---	---	---	---	---	---
4-Bromophenyl phenylether	ug/Kg	<320	<330	<330	<320	<330	---	---	---	---	---	---	---	---	---
Butyl benzyl phthalate	ug/Kg	<320	<330	<330	<320	<330	---	---	---	---	---	---	---	---	---
Carbazole	ug/Kg	<320	<330	<330	<320	<330	---	---	---	---	---	---	---	---	---
4-Chloroaniline	ug/Kg	<1700	<1600	<1700	<1700	<1700	---	---	---	---	---	---	---	---	---
4-Chloro-3-methylphenol	ug/Kg	<320	<330	<330	<320	<330	---	---	---	---	---	---	---	---	---
beta-Chloronaphthalene	ug/Kg	<320	<330	<330	<320	<330	---	---	---	---	---	---	---	---	---
2-Chlorophenol	ug/Kg	<320	<330	<330	<320	<330	---	---	---	---	---	---	---	---	---

Table 1
Summary of Soil Analytical Results - MWD Property
Holland, Michigan

Sample Location		SB-OS-35	SB-OS-35	SB-OS-36	SB-OS-36	SVW-1	SVW-2B	VF-26	VF-28	VF-30	VF-32	VF-34	VF-36	VF-38	VF-40
Lab Sample ID		0306200-09	0306200-10	0306200-07	0306200-08	0308244-01	0308414-01	0307199-02	0307243-01	0307243-03	0307243-05	0307324-01	0307324-03	0307324-05	0307344-05
Sampled By		Horizon	Horizon	Horizon	Horizon	Horizon	Horizon	Horizon	Horizon	Horizon	Horizon	Horizon	Horizon	Horizon	Horizon
Analyzed By		e-Lab	e-Lab	e-Lab	e-Lab	e-Lab	e-Lab	e-Lab	e-Lab	e-Lab	e-Lab	e-Lab	e-Lab	e-Lab	e-Lab
Sample Date		06/13/2003	06/13/2003	06/13/2003	06/13/2003	08/18/2003	08/27/2003	07/15/2003	07/17/2003	07/17/2003	07/17/2003	07/23/2003	07/23/2003	07/23/2003	07/24/2003
Sample Depth (ft.)		3.0'-3.5'	6.0'-6.5'	5.5'-6.0'	7.5'-8.0'										
Semi-Volatiles Cont.	*Units*														
4-Chlorophenyl phenylether	ug/Kg	<320	<330	<330	<320	<330	---	---	---	---	---	---	---	---	---
Chrysene {Q}	ug/Kg	<320	<330	<330	<320	<330	---	---	---	---	---	---	---	---	---
Dibenzo(a,h)anthracene {Q}	ug/Kg	<320	<330	<330	<320	<330	---	---	---	---	---	---	---	---	---
Dibenzofuran	ug/Kg	<320	<330	<330	<320	<330	---	---	---	---	---	---	---	---	---
1,2-Dichlorobenzene	ug/Kg	<320	<330	<330	<320	<330	---	---	---	---	---	---	---	---	---
1,3-Dichlorobenzene	ug/Kg	<320	<330	<330	<320	<330	---	---	---	---	---	---	---	---	---
1,4-Dichlorobenzene	ug/Kg	<320	<330	<330	<320	<330	---	---	---	---	---	---	---	---	---
3,3'-Dichlorobenzidine	ug/Kg	<2000	<2000	<2000	<2000	<2000	---	---	---	---	---	---	---	---	---
2,4-Dichlorophenol	ug/Kg	<320	<330	<330	<320	<330	---	---	---	---	---	---	---	---	---
Diethyl phthalate	ug/Kg	<320	<330	<330	<320	<330	---	---	---	---	---	---	---	---	---
Dimethyl phthalate	ug/Kg	<320	<330	<330	<320	<330	---	---	---	---	---	---	---	---	---
2,4-Dimethylphenol	ug/Kg	<320	<330	<330	<320	<330	---	---	---	---	---	---	---	---	---
Di-n-butyl phthalate	ug/Kg	<320	<330	<330	<320	<360	---	---	---	---	---	---	---	---	---
2,4-Dinitrophenol	ug/Kg	<1700	<1600	<1700	<1700	<1700	---	---	---	---	---	---	---	---	---
2,4-Dinitrotoluene	ug/Kg	<320	<330	<330	<320	<330	---	---	---	---	---	---	---	---	---
2,6-Dinitrotoluene	ug/Kg	<320	<330	<330	<320	<330	---	---	---	---	---	---	---	---	---
Di-n-octyl phthalate	ug/Kg	<320	<330	<330	<320	<330	---	---	---	---	---	---	---	---	---
Dimethylformamide {I}	ug/Kg	---	---	---	---	---	---	---	---	---	---	---	---	---	---
5,5-Diphenylhydantoin	ug/Kg	**1700**	**1400**	<330	**2900**	<360	---	---	---	---	---	---	---	---	---
Fluoranthene	ug/Kg	<320	<330	<330	<320	<330	---	---	---	---	---	---	---	---	---
Fluorene	ug/Kg	<320	<330	<330	<320	<330	---	---	---	---	---	---	---	---	---
Hexachlorobenzene (C-66)	ug/Kg	<320	<330	<330	<320	<330	---	---	---	---	---	---	---	---	---
Hexachlorobutadiene (C-46)	ug/Kg	<320	<330	<330	<320	<330	---	---	---	---	---	---	---	---	---
Hexachlorocyclopentadiene (C-56	ug/Kg	<320	<330	<330	<320	<330	---	---	---	---	---	---	---	---	---
Hexachloroethane	ug/Kg	<320	<330	<330	<320	<330	---	---	---	---	---	---	---	---	---
Indeno(1,2,3-cd)pyrene {Q}	ug/Kg	<320	<330	<330	<320	<330	---	---	---	---	---	---	---	---	---
Isophorone	ug/Kg	<320	<330	<330	<320	<330	---	---	---	---	---	---	---	---	---
2-Methyl-4,6-dinitrophenol	ug/Kg	<1700	<1600	<1700	<1700	<1700	---	---	---	---	---	---	---	---	---
2-Methylnaphthalene	ug/Kg	<320	<330	<330	<320	<330	---	---	---	---	---	---	---	---	---
2-Methylphenol {J}	ug/Kg	<320	<330	<330	<320	<330	---	---	---	---	---	---	---	---	---
4-Methylphenol {J}	ug/Kg	<320	<330	<330	<320	<330	---	---	---	---	---	---	---	---	---
Naphthalene	ug/Kg	<320	<330	<330	<320	<330	---	---	---	---	---	---	---	---	---
2-Nitroaniline	ug/Kg	<1700	<1600	<1700	<1700	<1700	---	---	---	---	---	---	---	---	---
3-Nitroaniline	ug/Kg	<1700	<1600	<1700	<1700	<1700	---	---	---	---	---	---	---	---	---
4-Nitroaniline	ug/Kg	<1700	<1600	<1700	<1700	<1700	---	---	---	---	---	---	---	---	---
Nitrobenzene {I}	ug/Kg	<200	<200	<200	<200	<330	---	---	---	---	---	---	---	---	---
2-Nitrophenol	ug/Kg	<320	<330	<330	<320	<330	---	---	---	---	---	---	---	---	---
4-Nitrophenol	ug/Kg	<1700	<1600	<1700	<1700	<1700	---	---	---	---	---	---	---	---	---
n-Nitroso-di-n-propylamine	ug/Kg	<320	<330	<330	<320	<330	---	---	---	---	---	---	---	---	---
N-Nitrosodiphenylamine	ug/Kg	<320	<330	<330	<320	<330	---	---	---	---	---	---	---	---	---
Pentachlorophenol	ug/Kg	<730	<740	<800	<790	<800	---	---	---	---	---	---	---	---	---
Phenanthrene	ug/Kg	<320	<330	<330	<320	<330	---	---	---	---	---	---	---	---	---
Phenol	ug/Kg	<320	<330	<330	<320	<330	---	---	---	---	---	---	---	---	---
Pyrene	ug/Kg	<320	<330	<330	<320	<330	---	---	---	---	---	---	---	---	---

Table 1
Summary of Soil Analytical Results - MWD Property
Holland, Michigan

Sample Location		SB-OS-35	SB-OS-35	SB-OS-36	SB-OS-36	SVW-1	SVW-2B	VF-26	VF-28	VF-30	VF-32	VF-34	VF-36	VF-38	VF-40
Lab Sample ID		0306200-09	0306200-10	0306200-07	0306200-08	0308244-01	0308414-01	0307199-02	0307243-01	0307243-03	0307243-05	0307324-01	0307324-03	0307324-05	0307344-05
Sampled By		Horizon	Horizon	Horizon	Horizon	Horizon	Horizon	Horizon	Horizon	Horizon	Horizon	Horizon	Horizon	Horizon	Horizon
Analyzed By		e-Lab	e-Lab	e-Lab	e-Lab	e-Lab	e-Lab	e-Lab	e-Lab	e-Lab	e-Lab	e-Lab	e-Lab	e-Lab	e-Lab
Sample Date		06/13/2003	06/13/2003	06/13/2003	06/13/2003	08/18/2003	08/27/2003	07/15/2003	07/17/2003	07/17/2003	07/17/2003	07/23/2003	07/23/2003	07/23/2003	07/24/2003
Sample Depth (ft.)		3.0'-3.5'	6.0'-6.5'	5.5'-6.0'	7.5'-8.0'										
Semi-Volatiles Cont.	*Units*														
1,2,4-Trichlorobenzene	ug/Kg	<320	<330	<330	<320	<330	---	---	---	---	---	---	---	---	---
2,4,5-Trichlorophenol	ug/Kg	<320	<330	<330	<320	<330	---	---	---	---	---	---	---	---	---
2,4,6-Trichlorophenol	ug/Kg	<320	<330	<330	<320	<330	---	---	---	---	---	---	---	---	---
Volatiles	*Units*														
Acetone {I}	ug/Kg	<750	<750	<750	<810	---	---	---	---	---	---	---	---	---	---
Benzene {I}	ug/Kg	<50	<49	<50	<54	---	---	---	---	---	---	---	---	---	---
Bromodichloromethane	ug/Kg	<100	<100	<100	<110	---	---	---	---	---	---	---	---	---	---
Bromoform	ug/Kg	<100	<100	<100	<110	---	---	---	---	---	---	---	---	---	---
Bromomethane	ug/Kg	<250	<250	<250	<270	---	---	---	---	---	---	---	---	---	---
2-Butanone (MEK) {I}	ug/Kg	<750	<750	<750	<740	---	---	---	---	---	---	---	---	---	---
Carbon disulfide {I,R}	ug/Kg	<250	<250	<250	<270	---	---	---	---	---	---	---	---	---	---
Carbon tetrachloride	ug/Kg	<50	<49	<50	<54	---	---	---	---	---	---	---	---	---	---
Chlorobenzene {I}	ug/Kg	<50	<49	<50	**150**	---	---	---	---	---	---	---	---	---	---
Chloroethane	ug/Kg	<250	<250	<250	<270	---	---	---	---	---	---	---	---	---	---
Chloroform	ug/Kg	<50	<49	<50	<54	---	---	---	---	---	---	---	---	---	---
Chloromethane {I}	ug/Kg	<250	<250	<250	<270	---	---	---	---	---	---	---	---	---	---
Dibromochloromethane	ug/Kg	<100	<100	<100	<110	---	---	---	---	---	---	---	---	---	---
1,1-Dichloroethane	ug/Kg	<50	<49	<50	<54	---	---	---	---	---	---	---	---	---	---
1,2-Dichloroethane {I}	ug/Kg	<50	<49	<50	<54	---	---	---	---	---	---	---	---	---	---
1,1-Dichloroethylene {I}	ug/Kg	<50	<49	<50	<54	---	---	---	---	---	---	---	---	---	---
1,2-Dichloroethylene {I}	ug/Kg	<100	<100	<100	<110	---	---	---	---	---	---	---	---	---	---
cis-1,2-Dichloroethylene {I}	ug/Kg	<50	<49	<50	<54	---	---	---	---	---	---	---	---	---	---
trans-1,2-Dichloroethylene	ug/Kg	<50	<49	<50	<54	---	---	---	---	---	---	---	---	---	---
1,2-Dichloropropane {I}	ug/Kg	<50	<49	<50	<54	---	---	---	---	---	---	---	---	---	---
cis-1,3-Dichloropropene {J}	ug/Kg	<50	<49	<50	<54	---	---	---	---	---	---	---	---	---	---
1,3-Dichloropropene, total {J}	ug/Kg	<100	<100	<100	<110	---	---	---	---	---	---	---	---	---	---
trans-1,3-Dichloropropene {J}	ug/Kg	<50	<49	<50	<54	---	---	---	---	---	---	---	---	---	---
Ethyl acetate {I}	ug/Kg	---	---	---	---	---	---	---	---	---	---	---	---	---	---
Ethylbenzene {I}	ug/Kg	<50	<49	<50	<54	---	---	---	---	---	---	---	---	---	---
Hexane {I}	ug/Kg	---	---	---	---	---	---	---	---	---	---	---	---	---	---
2-Hexanone {I}	ug/Kg	<2500	<2500	<2500	<2500	---	---	---	---	---	---	---	---	---	---
Methylene chloride	ug/Kg	**270**	<250	<250	<270	---	---	---	---	---	---	---	---	---	---
4-Methyl-2-pentanone (MIBK) {I}	ug/Kg	<2500	<2500	<2500	<2500	---	---	---	---	---	---	---	---	---	---
Styrene {I}	ug/Kg	<50	<49	<50	<54	---	---	---	---	---	---	---	---	---	---
1,1,2,2-Tetrachloroethane	ug/Kg	<100	<100	<100	<110	---	---	---	---	---	---	---	---	---	---
Tetrachloroethylene	ug/Kg	<50	<49	<50	<54	---	---	---	---	---	---	---	---	---	---
Toluene {I}	ug/Kg	<50	<49	<50	<54	---	---	---	---	---	---	---	---	---	---
1,1,1-Trichloroethane	ug/Kg	<50	<49	<50	<54	---	---	---	---	---	---	---	---	---	---
1,1,2-Trichloroethane	ug/Kg	<50	<49	<50	<54	---	---	---	---	---	---	---	---	---	---
Trichloroethylene	ug/Kg	<50	<49	<50	<54	---	---	---	---	---	---	---	---	---	---
Vinyl chloride	ug/Kg	<100	<100	<100	<110	---	---	---	---	---	---	---	---	---	---
Xylene (Total) {I}	ug/Kg	<150	<150	<150	<160	---	---	---	---	---	---	---	---	---	---
Xylene, o {I}	ug/Kg	<50	<49	<50	<54	---	---	---	---	---	---	---	---	---	---
Xylene, p&m {I}	ug/Kg	<100	<100	<100	<110	---	---	---	---	---	---	---	---	---	---

Table 1
Summary of Soil Analytical Results - MWD Property
Holland, Michigan

Sample Location		VF-42	VF-44	VF-46	VF-48	VF-50	VF-52	VF-54A	VF-56	VF-58	VF-60	VF-62	VW-1	VW-2A	VW-3
Lab Sample ID		0307344-06	0307414-01	0307414-02	0307414-03	0308118-01	0308118-03	0308199-01	0308076-12	0308076-13	0308076-14	0308076-15	0305128-10	0309058-01	0305128-08
Sampled By		Horizon	Horizon	Horizon	Horizon	Horizon	Horizon	Horizon	Horizon	Horizon	Horizon	Horizon	Horizon	Horizon	Horizon
Analyzed By		e-Lab	e-Lab	e-Lab	e-Lab	e-Lab	e-Lab	e-Lab	e-Lab	e-Lab	e-Lab	e-Lab	e-Lab	e-Lab	e-Lab
Sample Date		07/24/2003	07/29/2003	07/29/2003	07/29/2003	08/07/2003	08/07/2003	08/14/2003	08/05/2003	08/05/2003	08/05/2003	08/05/2003	05/08/2003	09/04/2003	05/07/2003
Sample Depth (ft.)													5.0'-5.5'		5.0'-5.5'
Inorganics	*Units*														
Arsenic	mg/Kg	---	---	---	---	---	---	---	---	---	---	---	**3**	---	**2.3**
Barium {B}	mg/Kg	---	---	---	---	---	---	---	---	---	---	---	---	---	---
Cadmium {B}	mg/Kg	---	---	---	---	---	---	---	---	---	---	---	---	---	---
Chromium, Total	mg/Kg	---	---	---	---	---	---	---	---	---	---	---	**8.8**	---	**6**
Copper {B}	mg/Kg	---	---	---	---	---	---	---	---	---	---	---	**2.3**	---	**3.1**
Lead {B}	mg/Kg	---	---	---	---	---	---	---	---	---	---	---	---	---	---
Mercury, Total {B,Z}	mg/Kg	---	---	---	---	---	---	---	---	---	---	---	<0.057	---	<0.053
Selenium {B}	mg/Kg	---	---	---	---	---	---	---	---	---	---	---	**0.061**	---	**0.077**
Silver {B}	mg/Kg	---	---	---	---	---	---	---	---	---	---	---	**0.037**	---	**0.037**
Zinc {B}	mg/Kg	---	---	---	---	---	---	---	---	---	---	---	---	---	---
Misc.	*Units*														
Isopropyl alcohol {I}	mg/Kg	---	---	---	---	---	---	---	---	---	---	---	---	---	---
Methanol {I}	mg/Kg	---	---	---	---	---	---	---	---	---	---	---	---	---	---
Percent Moisture	%	**21**	**17**	**24**	**25**	**21**	**23**	**21**	**23**	**21**	**22**	**18**	**12**	**8.2**	**6**
PCB's	*Units*														
Aroclor 1016 {J,T}	ug/Kg	<50	<49	<55	<53	<330	<330	<320	<330	<330	<330	<330	<340	<330	<310
Aroclor 1221 {J,T}	ug/Kg	<50	<49	<55	<53	<330	<330	<320	<330	<330	<330	<330	<340	<330	<310
Aroclor 1232 {J,T}	ug/Kg	<50	<49	<55	<53	<330	<330	<320	<330	<330	<330	<330	<340	<330	<310
Aroclor 1242 {J,T}	ug/Kg	<50	<49	<55	<53	<330	<330	<320	<330	<330	<330	<330	<340	<330	<310
Aroclor 1248 {J,T}	ug/Kg	<50	<49	<55	<53	<330	<330	<320	<330	<330	<330	<330	<340	<330	<310
Aroclor 1254 {J,T}	ug/Kg	<50	<49	<55	<53	<330	<330	<320	<330	<330	<330	<330	<340	<330	<310
Aroclor 1260 {J,T}	ug/Kg	<50	<49	<55	<53	<330	<330	<320	<330	<330	<330	<330	<340	<330	<310
Semi-Volatiles	*Units*														
Acenaphthene	ug/Kg	---	---	---	---	---	---	---	---	---	---	---	<69	---	<64
Acenaphthylene	ug/Kg	---	---	---	---	---	---	---	---	---	---	---	<69	---	<64
Aniline	ug/Kg	---	---	---	---	---	---	---	---	---	---	---	<720	---	<660
Anthracene	ug/Kg	---	---	---	---	---	---	---	---	---	---	---	<69	---	<64
Benzo(a)anthracene {Q}	ug/Kg	---	---	---	---	---	---	---	---	---	---	---	<69	---	<64
Benzo(a)pyrene {Q}	ug/Kg	---	---	---	---	---	---	---	---	---	---	---	<69	---	<320
Benzo(b)fluoranthene {Q}	ug/Kg	---	---	---	---	---	---	---	---	---	---	---	<69	---	<320
Benzo(g,h,i)perylene	ug/Kg	---	---	---	---	---	---	---	---	---	---	---	<69	---	<320
Benzo(k)fluoranthene {Q}	ug/Kg	---	---	---	---	---	---	---	---	---	---	---	<69	---	<320
Benzophenone	ug/Kg	---	---	---	---	---	---	---	---	---	---	---	<360	---	<330
bis(2-Chloroethoxy)methane	ug/Kg	---	---	---	---	---	---	---	---	---	---	---	<170	---	<160
bis(2-Chloroethyl)ether {I}	ug/Kg	---	---	---	---	---	---	---	---	---	---	---	<170	---	<160
bis(2-Chloroisopropyl)ether	ug/Kg	---	---	---	---	---	---	---	---	---	---	---	<170	---	<160
bis(2-Ethylhexyl)phthalate	ug/Kg	---	---	---	---	---	---	---	---	---	---	---	<360	---	**350**
4-Bromophenyl phenylether	ug/Kg	---	---	---	---	---	---	---	---	---	---	---	<170	---	<160
Butyl benzyl phthalate	ug/Kg	---	---	---	---	---	---	---	---	---	---	---	<170	---	<160
Carbazole	ug/Kg	---	---	---	---	---	---	---	---	---	---	---	<170	---	<160
4-Chloroaniline	ug/Kg	---	---	---	---	---	---	---	---	---	---	---	<720	---	<660
4-Chloro-3-methylphenol	ug/Kg	---	---	---	---	---	---	---	---	---	---	---	<170	---	<160
beta-Chloronaphthalene	ug/Kg	---	---	---	---	---	---	---	---	---	---	---	<170	---	<160
2-Chlorophenol	ug/Kg	---	---	---	---	---	---	---	---	---	---	---	<170	---	<160

Table 1
Summary of Soil Analytical Results - MWD Property
Holland, Michigan

Sample Location		VF-42	VF-44	VF-46	VF-48	VF-50	VF-52	VF-54A	VF-56	VF-58	VF-60	VF-62	VW-1	VW-2A	VW-3
Lab Sample ID		0307344-06	0307414-01	0307414-02	0307414-03	0308118-01	0308118-03	0308199-01	0308076-12	0308076-13	0308076-14	0308076-15	0305128-10	0309058-01	0305128-08
Sampled By		Horizon	Horizon	Horizon	Horizon	Horizon	Horizon	Horizon	Horizon	Horizon	Horizon	Horizon	Horizon	Horizon	Horizon
Analyzed By		e-Lab	e-Lab	e-Lab	e-Lab	e-Lab	e-Lab	e-Lab	e-Lab	e-Lab	e-Lab	e-Lab	e-Lab	e-Lab	e-Lab
Sample Date		07/24/2003	07/29/2003	07/29/2003	07/29/2003	08/07/2003	08/07/2003	08/14/2003	08/05/2003	08/05/2003	08/05/2003	08/05/2003	05/08/2003	09/04/2003	05/07/2003
Sample Depth (ft.)													5.0'-5.5'		5.0'-5.5'
Semi-Volatiles Cont.	*Units*														
4-Chlorophenyl phenylether	ug/Kg	---	---	---	---	---	---	---	---	---	---	---	<170	---	<160
Chrysene {Q}	ug/Kg	---	---	---	---	---	---	---	---	---	---	---	<69	---	**76**
Dibenzo(a,h)anthracene {Q}	ug/Kg	---	---	---	---	---	---	---	---	---	---	---	<69	---	<320
Dibenzofuran	ug/Kg	---	---	---	---	---	---	---	---	---	---	---	<170	---	<160
1,2-Dichlorobenzene	ug/Kg	---	---	---	---	---	---	---	---	---	---	---	<170	---	<160
1,3-Dichlorobenzene	ug/Kg	---	---	---	---	---	---	---	---	---	---	---	<170	---	<160
1,4-Dichlorobenzene	ug/Kg	---	---	---	---	---	---	---	---	---	---	---	<170	---	<160
3,3'-Dichlorobenzidine	ug/Kg	---	---	---	---	---	---	---	---	---	---	---	<720	---	<660
2,4-Dichlorophenol	ug/Kg	---	---	---	---	---	---	---	---	---	---	---	<170	---	<160
Diethyl phthalate	ug/Kg	---	---	---	---	---	---	---	---	---	---	---	<360	---	<330
Dimethyl phthalate	ug/Kg	---	---	---	---	---	---	---	---	---	---	---	<360	---	<330
2,4-Dimethylphenol	ug/Kg	---	---	---	---	---	---	---	---	---	---	---	<360	---	<330
Di-n-butyl phthalate	ug/Kg	---	---	---	---	---	---	---	---	---	---	---	<360	---	<330
2,4-Dinitrophenol	ug/Kg	---	---	---	---	---	---	---	---	---	---	---	<720	---	<660
2,4-Dinitrotoluene	ug/Kg	---	---	---	---	---	---	---	---	---	---	---	<170	---	<160
2,6-Dinitrotoluene	ug/Kg	---	---	---	---	---	---	---	---	---	---	---	<170	---	<160
Di-n-octyl phthalate	ug/Kg	---	---	---	---	---	---	---	---	---	---	---	<170	---	<800
Dimethylformamide {I}	ug/Kg	---	---	---	---	---	---	---	---	---	---	---	---	---	---
5,5-Diphenylhydantoin	ug/Kg	---	---	---	---	---	---	---	---	---	---	---	<360	---	<330
Fluoranthene	ug/Kg	---	---	---	---	---	---	---	---	---	---	---	<69	---	<64
Fluorene	ug/Kg	---	---	---	---	---	---	---	---	---	---	---	<69	---	<64
Hexachlorobenzene (C-66)	ug/Kg	---	---	---	---	---	---	---	---	---	---	---	<170	---	<160
Hexachlorobutadiene (C-46)	ug/Kg	---	---	---	---	---	---	---	---	---	---	---	<170	---	<160
Hexachlorocyclopentadiene (C-56	ug/Kg	---	---	---	---	---	---	---	---	---	---	---	<360	---	<330
Hexachloroethane	ug/Kg	---	---	---	---	---	---	---	---	---	---	---	<170	---	<160
Indeno(1,2,3-cd)pyrene {Q}	ug/Kg	---	---	---	---	---	---	---	---	---	---	---	<69	---	<320
Isophorone	ug/Kg	---	---	---	---	---	---	---	---	---	---	---	<170	---	<160
2-Methyl-4,6-dinitrophenol	ug/Kg	---	---	---	---	---	---	---	---	---	---	---	<360	---	<330
2-Methylnaphthalene	ug/Kg	---	---	---	---	---	---	---	---	---	---	---	<170	---	<160
2-Methylphenol {J}	ug/Kg	---	---	---	---	---	---	---	---	---	---	---	<170	---	<160
4-Methylphenol {J}	ug/Kg	---	---	---	---	---	---	---	---	---	---	---	<170	---	<160
Naphthalene	ug/Kg	---	---	---	---	---	---	---	---	---	---	---	<69	---	<64
2-Nitroaniline	ug/Kg	---	---	---	---	---	---	---	---	---	---	---	<720	---	<660
3-Nitroaniline	ug/Kg	---	---	---	---	---	---	---	---	---	---	---	<720	---	<660
4-Nitroaniline	ug/Kg	---	---	---	---	---	---	---	---	---	---	---	<720	---	<660
Nitrobenzene {I}	ug/Kg	---	---	---	---	---	---	---	---	---	---	---	<170	---	<160
2-Nitrophenol	ug/Kg	---	---	---	---	---	---	---	---	---	---	---	<170	---	<160
4-Nitrophenol	ug/Kg	---	---	---	---	---	---	---	---	---	---	---	<720	---	<660
n-Nitroso-di-n-propylamine	ug/Kg	---	---	---	---	---	---	---	---	---	---	---	<170	---	<160
N-Nitrosodiphenylamine	ug/Kg	---	---	---	---	---	---	---	---	---	---	---	<170	---	<160
Pentachlorophenol	ug/Kg	---	---	---	---	---	---	---	---	---	---	---	<360	---	<330
Phenanthrene	ug/Kg	---	---	---	---	---	---	---	---	---	---	---	<69	---	**70**
Phenol	ug/Kg	---	---	---	---	---	---	---	---	---	---	---	<170	---	<160
Pyrene	ug/Kg	---	---	---	---	---	---	---	---	---	---	---	<69	---	<64

Table 1
Summary of Soil Analytical Results - MWD Property
Holland, Michigan

Sample Location		VF-42	VF-44	VF-46	VF-48	VF-50	VF-52	VF-54A	VF-56	VF-58	VF-60	VF-62	VW-1	VW-2A	VW-3
Lab Sample ID		0307344-06	0307414-01	0307414-02	0307414-03	0308118-01	0308118-03	0308199-01	0308076-12	0308076-13	0308076-14	0308076-15	0305128-10	0309058-01	0305128-08
Sampled By		Horizon	Horizon	Horizon	Horizon	Horizon	Horizon	Horizon	Horizon	Horizon	Horizon	Horizon	Horizon	Horizon	Horizon
Analyzed By		e-Lab	e-Lab	e-Lab	e-Lab	e-Lab	e-Lab	e-Lab	e-Lab	e-Lab	e-Lab	e-Lab	e-Lab	e-Lab	e-Lab
Sample Date		07/24/2003	07/29/2003	07/29/2003	07/29/2003	08/07/2003	08/07/2003	08/14/2003	08/05/2003	08/05/2003	08/05/2003	08/05/2003	05/08/2003	09/04/2003	05/07/2003
Sample Depth (ft.)													5.0'-5.5'		5.0'-5.5'
Semi-Volatiles Cont.	*Units*														
1,2,4-Trichlorobenzene	ug/Kg	---	---	---	---	---	---	---	---	---	---	---	<170	---	<160
2,4,5-Trichlorophenol	ug/Kg	---	---	---	---	---	---	---	---	---	---	---	<170	---	<160
2,4,6-Trichlorophenol	ug/Kg	---	---	---	---	---	---	---	---	---	---	---	<170	---	<160
Volatiles	*Units*														
Acetone {I}	ug/Kg	---	---	---	---	---	---	---	---	---	---	---	<510	---	<480
Benzene {I}	ug/Kg	---	---	---	---	---	---	---	---	---	---	---	<34	---	<32
Bromodichloromethane	ug/Kg	---	---	---	---	---	---	---	---	---	---	---	<68	---	<64
Bromoform	ug/Kg	---	---	---	---	---	---	---	---	---	---	---	<68	---	<64
Bromomethane	ug/Kg	---	---	---	---	---	---	---	---	---	---	---	<170	---	<160
2-Butanone (MEK) {I}	ug/Kg	---	---	---	---	---	---	---	---	---	---	---	<170	---	<160
Carbon disulfide {I,R}	ug/Kg	---	---	---	---	---	---	---	---	---	---	---	<170	---	<160
Carbon tetrachloride	ug/Kg	---	---	---	---	---	---	---	---	---	---	---	<34	---	<32
Chlorobenzene {I}	ug/Kg	---	---	---	---	---	---	---	---	---	---	---	<34	---	<32
Chloroethane	ug/Kg	---	---	---	---	---	---	---	---	---	---	---	<170	---	<160
Chloroform	ug/Kg	---	---	---	---	---	---	---	---	---	---	---	<34	---	<32
Chloromethane {I}	ug/Kg	---	---	---	---	---	---	---	---	---	---	---	<170	---	<160
Dibromochloromethane	ug/Kg	---	---	---	---	---	---	---	---	---	---	---	<68	---	<64
1,1-Dichloroethane	ug/Kg	---	---	---	---	---	---	---	---	---	---	---	<34	---	<32
1,2-Dichloroethane {I}	ug/Kg	---	---	---	---	---	---	---	---	---	---	---	<34	---	<32
1,1-Dichloroethylene {I}	ug/Kg	---	---	---	---	---	---	---	---	---	---	---	<34	---	<32
1,2-Dichloroethylene {I}	ug/Kg	---	---	---	---	---	---	---	---	---	---	---	<68	---	<64
cis-1,2-Dichloroethylene {I}	ug/Kg	---	---	---	---	---	---	---	---	---	---	---	<34	---	<32
trans-1,2-Dichloroethylene	ug/Kg	---	---	---	---	---	---	---	---	---	---	---	<34	---	<32
1,2-Dichloropropane {I}	ug/Kg	---	---	---	---	---	---	---	---	---	---	---	<34	---	<32
cis-1,3-Dichloropropene {J}	ug/Kg	---	---	---	---	---	---	---	---	---	---	---	<34	---	<32
1,3-Dichloropropene, total {J}	ug/Kg	---	---	---	---	---	---	---	---	---	---	---	<68	---	<64
trans-1,3-Dichloropropene {J}	ug/Kg	---	---	---	---	---	---	---	---	---	---	---	<34	---	<32
Ethyl acetate {I}	ug/Kg	---	---	---	---	---	---	---	---	---	---	---	---	---	---
Ethylbenzene {I}	ug/Kg	---	---	---	---	---	---	---	---	---	---	---	<34	---	<32
Hexane {I}	ug/Kg	---	---	---	---	---	---	---	---	---	---	---	---	---	---
2-Hexanone {I}	ug/Kg	---	---	---	---	---	---	---	---	---	---	---	<170	---	<160
Methylene chloride	ug/Kg	---	---	---	---	---	---	---	---	---	---	---	<170	<160	<160
4-Methyl-2-pentanone (MIBK) {I}	ug/Kg	---	---	---	---	---	---	---	---	---	---	---	<170	---	<160
Styrene {I}	ug/Kg	---	---	---	---	---	---	---	---	---	---	---	<34	---	<32
1,1,2,2-Tetrachloroethane	ug/Kg	---	---	---	---	---	---	---	---	---	---	---	<68	---	<64
Tetrachloroethylene	ug/Kg	---	---	---	---	---	---	---	---	---	---	---	<34	---	<32
Toluene {I}	ug/Kg	---	---	---	---	---	---	---	---	---	---	---	<34	---	<32
1,1,1-Trichloroethane	ug/Kg	---	---	---	---	---	---	---	---	---	---	---	<34	---	<32
1,1,2-Trichloroethane	ug/Kg	---	---	---	---	---	---	---	---	---	---	---	<34	---	<32
Trichloroethylene	ug/Kg	---	---	---	---	---	---	---	---	---	---	---	<34	---	<32
Vinyl chloride	ug/Kg	---	---	---	---	---	---	---	---	---	---	---	<68	---	<64
Xylene (Total) {I}	ug/Kg	---	---	---	---	---	---	---	---	---	---	---	<100	---	<96
Xylene, o {I}	ug/Kg	---	---	---	---	---	---	---	---	---	---	---	<34	---	<32
Xylene, p&m {I}	ug/Kg	---	---	---	---	---	---	---	---	---	---	---	<68	---	<64

Table 1
Summary of Soil Analytical Results - MWD Property
Holland, Michigan

Sample Location		VW-4	VW-5	VW-9	VW-10	VW-11A	VW-12A	VW-13	VW-14	VW-15	VW-16A	VW-17A	VW-18	VW-19B	VW-20
Lab Sample ID		0305128-07	0305128-06	0305128-11	0305128-05	0308243-06	0308243-05	0305128-02	0305128-01	0305110-13	0308243-04	0308243-03	0305110-05	0307414-04	0305110-01
Sampled By		Horizon	Horizon	Horizon	Horizon	Horizon	Horizon	Horizon	Horizon	Horizon	Horizon	Horizon	Horizon	Horizon	Horizon
Analyzed By		e-Lab	e-Lab	e-Lab	e-Lab	e-Lab	e-Lab	e-Lab	e-Lab	e-Lab	e-Lab	e-Lab	e-Lab	e-Lab	e-Lab
Sample Date		05/07/2003	05/07/2003	05/08/2003	05/07/2003	08/18/2003	08/18/2003	05/07/2003	05/07/2003	05/06/2003	08/18/2003	08/18/2003	05/06/2003	07/29/2003	05/06/2003
Sample Depth (ft.)		7'-7.5'	6'-6.5'	7.0'-7.5'	5.5'-6.0'			5.5'-6.0'	6'-6.5'	5.5'-6.0'			7.0'-7.5'		7.0'-7.5'
Inorganics	*Units*														
Arsenic	mg/Kg	**1.4**	**1.9**	<0.90	**2.8**	---	---	**1.4**	**1.2**	**0.92**	---	---	**2.4**	---	**1.6**
Barium {B}	mg/Kg	---	---	---	---	---	---	---	---	---	---	---	---	---	---
Cadmium {B}	mg/Kg	---	---	---	---	---	---	---	---	---	---	---	---	---	---
Chromium, Total	mg/Kg	**6**	**6.4**	**9.5**	**7.3**	**4.8**	---	**3.1**	**5.9**	**4.8**	---	**5.5**	**8.4**	**2.6**	**5.5**
Copper {B}	mg/Kg	**2.8**	**3.8**	**3.3**	**4**	---	---	**1.5**	**3.6**	**4.4**	---	---	**3.9**	---	**2.4**
Lead {B}	mg/Kg	---	---	---	---	---	---	---	---	---	---	---	---	---	---
Mercury, Total {B,Z}	mg/Kg	<0.056	<0.055	<0.055	<0.054	---	---	<0.053	<0.053	<0.062	---	---	**0.073**	---	<0.053
Selenium {B}	mg/Kg	**0.16**	**0.13**	**0.12**	**0.11**	---	---	**0.082**	**0.082**	**0.068**	---	<0.2	**0.11**	---	**0.23**
Silver {B}	mg/Kg	<0.023	<0.027	**0.18**	<0.021	<0.1	---	<0.020	<0.025	<0.028	---	---	<0.020	<0.025	<0.019
Zinc {B}	mg/Kg	---	---	---	---	---	---	---	---	---	---	---	---	---	---
Misc.	*Units*														
Isopropyl alcohol {I}	mg/Kg	---	---	---	---	---	---	---	---	---	---	---	---	---	---
Methanol {I}	mg/Kg	---	---	---	---	---	---	---	---	---	---	---	---	---	---
Percent Moisture	%	**10**	**8.7**	**9.4**	**6.8**	**8.9**	**19**	**4.8**	**6.4**	**20**	**15**	**8.1**	**6.8**	**13**	**5.5**
PCB's	*Units*														
Aroclor 1016 {J,T}	ug/Kg	<330	<320	<330	<320	<330	---	<310	<320	<370	---	<330	<320	---	<310
Aroclor 1221 {J,T}	ug/Kg	<330	<320	<330	<320	<330	---	<310	<320	<370	---	<330	<320	---	<310
Aroclor 1232 {J,T}	ug/Kg	<330	<320	<330	<320	<330	---	<310	<320	<370	---	<330	<320	---	<310
Aroclor 1242 {J,T}	ug/Kg	<330	<320	<330	<320	<330	---	<310	<320	<370	---	<330	<320	---	<310
Aroclor 1248 {J,T}	ug/Kg	<330	<320	<330	<320	<330	---	<310	<320	<370	---	<330	<320	---	<310
Aroclor 1254 {J,T}	ug/Kg	<330	<320	<330	<320	<330	---	<310	<320	<370	---	<330	<320	---	<310
Aroclor 1260 {J,T}	ug/Kg	<330	<320	<330	<320	<330	---	<310	<320	<370	---	<330	<320	---	<310
Semi-Volatiles	*Units*														
Acenaphthene	ug/Kg	<70	<73	<71	<70	---	<330	<66	<71	<78	---	---	<65	---	<64
Acenaphthylene	ug/Kg	<70	<73	<71	<70	---	---	<66	<71	<78	---	---	<65	---	<64
Aniline	ug/Kg	<720	<750	<740	<720	---	---	<680	<730	<810	---	---	<670	---	<660
Anthracene	ug/Kg	<70	<73	<71	<70	---	---	<66	<71	<78	---	---	<65	---	<64
Benzo(a)anthracene {Q}	ug/Kg	<70	<73	<71	<70	---	---	<66	<71	<78	---	---	<65	---	<64
Benzo(a)pyrene {Q}	ug/Kg	<70	<73	**120**	<70	---	---	<66	<71	<78	---	---	<65	---	<64
Benzo(b)fluoranthene {Q}	ug/Kg	<70	<73	<71	<70	---	---	<66	<71	<78	---	---	<65	---	<64
Benzo(g,h,i)perylene	ug/Kg	<70	<73	<71	<70	---	---	<66	<71	<78	---	---	<65	---	<64
Benzo(k)fluoranthene {Q}	ug/Kg	<70	<73	<71	<70	---	---	<66	<71	<78	---	---	<65	---	<64
Benzophenone	ug/Kg	<360	<370	<370	<360	---	---	<340	<360	<400	---	<370	<330	---	<330
bis(2-Chloroethoxy)methane	ug/Kg	<170	<180	<180	<170	---	---	<170	<180	<200	---	---	<160	---	<160
bis(2-Chloroethyl)ether {I}	ug/Kg	<170	<180	<180	<170	---	---	<170	<180	<200	---	---	<160	---	<160
bis(2-Chloroisopropyl)ether	ug/Kg	<170	<180	<180	<170	---	---	<170	<180	<200	---	---	<160	---	<160
bis(2-Ethylhexyl)phthalate	ug/Kg	<360	<370	<370	<360	---	---	<340	<360	<400	---	---	<330	---	<350
4-Bromophenyl phenylether	ug/Kg	<170	<180	<180	<170	---	---	<170	<180	<200	---	---	<160	---	<160
Butyl benzyl phthalate	ug/Kg	<170	<180	<180	<170	---	---	<170	<180	<200	---	---	<160	---	<170
Carbazole	ug/Kg	<170	<180	<180	<170	---	---	<170	<180	<200	---	---	<160	---	<160
4-Chloroaniline	ug/Kg	<720	<750	<740	<720	---	---	<680	<730	<810	---	---	<670	---	<660
4-Chloro-3-methylphenol	ug/Kg	<170	<180	<180	<170	---	---	<170	<180	<200	---	---	<160	---	<160
beta-Chloronaphthalene	ug/Kg	<170	<180	<180	<170	---	---	<170	<180	<200	---	---	<160	---	<160
2-Chlorophenol	ug/Kg	<170	<180	<180	<170	---	---	<170	<180	<200	---	---	<160	---	<160

Table 1
Summary of Soil Analytical Results - MWD Property
Holland, Michigan

Sample Location		VW-4	VW-5	VW-9	VW-10	VW-11A	VW-12A	VW-13	VW-14	VW-15	VW-16A	VW-17A	VW-18	VW-19B	VW-20
Lab Sample ID		0305128-07	0305128-06	0305128-11	0305128-05	0308243-06	0308243-05	0305128-02	0305128-01	0305110-13	0308243-04	0308243-03	0305110-05	0307414-04	0305110-01
Sampled By		Horizon	Horizon	Horizon	Horizon	Horizon	Horizon	Horizon	Horizon	Horizon	Horizon	Horizon	Horizon	Horizon	Horizon
Analyzed By		e-Lab	e-Lab	e-Lab	e-Lab	e-Lab	e-Lab	e-Lab	e-Lab	e-Lab	e-Lab	e-Lab	e-Lab	e-Lab	e-Lab
Sample Date		05/07/2003	05/07/2003	05/08/2003	05/07/2003	08/18/2003	08/18/2003	05/07/2003	05/07/2003	05/06/2003	08/18/2003	08/18/2003	05/06/2003	07/29/2003	05/06/2003
Sample Depth (ft.)		7'-7.5'	6'-6.5'	7.0'-7.5'	5.5'-6.0'			5.5'-6.0'	6'-6.5'	5.5'-6.0'			7.0'-7.5'		7.0'-7.5'
Semi-Volatiles Cont.	*Units*														
4-Chlorophenyl phenylether	ug/Kg	<170	<180	<180	<170	---	---	<170	<180	<200	---	---	<160	---	<160
Chrysene {Q}	ug/Kg	<70	<73	<71	<70	---	---	<66	<71	<78	---	---	<65	---	<64
Dibenzo(a,h)anthracene {Q}	ug/Kg	<70	<73	<71	<70	---	---	<66	<71	<78	---	---	<65	---	<64
Dibenzofuran	ug/Kg	<170	<180	<180	<170	---	<330	<170	<180	<200	---	---	<160	---	<160
1,2-Dichlorobenzene	ug/Kg	<170	<180	<180	<170	---	---	<170	<180	<200	---	---	<160	---	<160
1,3-Dichlorobenzene	ug/Kg	<170	<180	<180	<170	---	---	<170	<180	<200	---	---	<160	---	<160
1,4-Dichlorobenzene	ug/Kg	<170	<180	<180	<170	---	---	<170	<180	<200	---	---	<160	---	<160
3,3'-Dichlorobenzidine	ug/Kg	<720	<750	<740	<720	---	---	<680	<730	<810	---	---	<670	---	<660
2,4-Dichlorophenol	ug/Kg	<170	<180	<180	<170	---	---	<170	<180	<200	---	---	<160	---	<160
Diethyl phthalate	ug/Kg	<360	<370	<370	<360	---	---	<340	<360	<400	---	---	<330	---	<330
Dimethyl phthalate	ug/Kg	<360	<370	<370	<360	---	---	<340	<360	<400	---	---	<330	---	<330
2,4-Dimethylphenol	ug/Kg	<360	<370	<370	<360	---	---	<340	<360	<400	---	---	<330	---	<330
Di-n-butyl phthalate	ug/Kg	<360	<370	<370	<360	---	---	<340	<360	<400	---	---	<330	---	<350
2,4-Dinitrophenol	ug/Kg	<720	<750	<740	<720	---	---	<680	<730	<810	---	---	<670	---	<660
2,4-Dinitrotoluene	ug/Kg	<170	<180	<180	<170	---	---	<170	<180	<200	---	---	<160	---	<160
2,6-Dinitrotoluene	ug/Kg	<170	<180	<180	<170	---	---	<170	<180	<200	---	---	<160	---	<160
Di-n-octyl phthalate	ug/Kg	<170	<180	<180	<170	---	---	<170	<180	<200	---	---	<160	---	<160
Dimethylformamide {I}	ug/Kg	---	---	---	---	---	---	---	---	---	---	---	---	---	---
5,5-Diphenylhydantoin	ug/Kg	<360	<370	<370	<360	<350	<390	<340	<360	<400	---	<370	<330	**580**	<330
Fluoranthene	ug/Kg	<70	<73	<71	<70	---	---	<66	<71	<78	---	---	<65	---	<64
Fluorene	ug/Kg	<70	<73	<71	<70	---	---	<66	<71	<78	---	---	<65	---	<64
Hexachlorobenzene (C-66)	ug/Kg	<170	<180	<180	<170	---	---	<170	<180	<200	---	---	<160	---	<160
Hexachlorobutadiene (C-46)	ug/Kg	<170	<180	<180	<170	---	---	<170	<180	<200	---	---	<160	---	<160
Hexachlorocyclopentadiene (C-56	ug/Kg	<360	<370	<370	<360	---	---	<340	<360	<400	---	---	<330	---	<330
Hexachloroethane	ug/Kg	<170	<180	<180	<170	---	---	<170	<180	<200	---	---	<160	---	<160
Indeno(1,2,3-cd)pyrene {Q}	ug/Kg	<70	<73	<71	<70	---	---	<66	<71	<78	---	---	<65	---	<64
Isophorone	ug/Kg	<170	<180	<180	<170	---	---	<170	<180	<200	---	---	<160	---	<160
2-Methyl-4,6-dinitrophenol	ug/Kg	<360	<370	<370	<360	---	---	<340	<360	<400	---	---	<330	---	<330
2-Methylnaphthalene	ug/Kg	<170	<180	<180	<170	---	---	<170	<180	<200	---	---	<160	---	<160
2-Methylphenol {J}	ug/Kg	<170	<180	<180	<170	---	---	<170	<180	<200	---	---	<160	---	<160
4-Methylphenol {J}	ug/Kg	<170	<180	<180	<170	---	---	<170	<180	<200	---	---	<160	---	<160
Naphthalene	ug/Kg	<70	<73	<71	<70	---	---	<66	<71	<78	---	---	<65	---	<64
2-Nitroaniline	ug/Kg	<720	<750	<740	<720	---	---	<680	<730	<810	---	---	<670	---	<660
3-Nitroaniline	ug/Kg	<720	<750	<740	<720	---	---	<680	<730	<810	---	---	<670	---	<660
4-Nitroaniline	ug/Kg	<720	<750	<740	<720	---	---	<680	<730	<810	---	---	<670	---	<660
Nitrobenzene {I}	ug/Kg	<170	<180	<180	<170	---	---	<170	<180	<200	---	---	<160	---	<160
2-Nitrophenol	ug/Kg	<170	<180	<180	<170	---	---	<170	<180	<200	---	---	<160	---	<160
4-Nitrophenol	ug/Kg	<720	<750	<740	<720	---	---	<680	<730	<810	---	---	<670	---	<660
n-Nitroso-di-n-propylamine	ug/Kg	<170	<180	<180	<170	---	---	<170	<180	<200	---	---	<160	---	<160
N-Nitrosodiphenylamine	ug/Kg	<170	<180	<180	<170	---	---	<170	<180	<200	---	---	<160	---	<160
Pentachlorophenol	ug/Kg	<360	<370	<370	<360	---	---	<340	<360	<400	---	---	<330	---	<330
Phenanthrene	ug/Kg	<70	<73	<71	<70	---	---	<66	<71	<78	---	---	<65	---	<64
Phenol	ug/Kg	<170	<180	<180	<170	---	---	<170	<180	<200	---	---	<160	---	<160
Pyrene	ug/Kg	<70	<73	<71	<70	---	---	<66	<71	<78	---	---	<65	---	<64

Table 1
Summary of Soil Analytical Results - MWD Property
Holland, Michigan

Sample Location		VW-4	VW-5	VW-9	VW-10	VW-11A	VW-12A	VW-13	VW-14	VW-15	VW-16A	VW-17A	VW-18	VW-19B	VW-20
Lab Sample ID		0305128-07	0305128-06	0305128-11	0305128-05	0308243-06	0308243-05	0305128-02	0305128-01	0305110-13	0308243-04	0308243-03	0305110-05	0307414-04	0305110-01
Sampled By		Horizon	Horizon	Horizon	Horizon	Horizon	Horizon	Horizon	Horizon	Horizon	Horizon	Horizon	Horizon	Horizon	Horizon
Analyzed By		e-Lab	e-Lab	e-Lab	e-Lab	e-Lab	e-Lab	e-Lab	e-Lab	e-Lab	e-Lab	e-Lab	e-Lab	e-Lab	e-Lab
Sample Date		05/07/2003	05/07/2003	05/08/2003	05/07/2003	08/18/2003	08/18/2003	05/07/2003	05/07/2003	05/06/2003	08/18/2003	08/18/2003	05/06/2003	07/29/2003	05/06/2003
Sample Depth (ft.)		7'-7.5'	6'-6.5'	7.0'-7.5'	5.5'-6.0'			5.5'-6.0'	6'-6.5'	5.5'-6.0'			7.0'-7.5'		7.0'-7.5'
Semi-Volatiles Cont.	*Units*														
1,2,4-Trichlorobenzene	ug/Kg	<170	<180	<180	<170	---	---	<170	<180	<200	---	---	<160	---	<160
2,4,5-Trichlorophenol	ug/Kg	<170	<180	<180	<170	---	---	<170	<180	<200	---	---	<160	---	<160
2,4,6-Trichlorophenol	ug/Kg	<170	<180	<180	<170	---	---	<170	<180	<200	---	---	<160	---	<160
Volatiles	*Units*														
Acetone {I}	ug/Kg	<530	<490	<500	<480	---	---	<510	<480	<580	---	---	<480	---	<540
Benzene {I}	ug/Kg	<35	<33	<33	<32	---	---	<34	<32	<39	---	---	<32	---	<36
Bromodichloromethane	ug/Kg	<71	<66	<66	<64	---	---	<68	<64	<78	---	---	<64	---	<72
Bromoform	ug/Kg	<71	<66	<66	<64	---	---	<68	<64	<78	---	---	<64	---	<72
Bromomethane	ug/Kg	<180	<160	<170	<160	---	---	<170	<160	<190	---	---	<160	---	<180
2-Butanone (MEK) {I}	ug/Kg	<180	<160	<170	<160	---	---	<170	<160	<190	---	---	<160	---	<180
Carbon disulfide {I,R}	ug/Kg	<180	<160	<170	<160	---	---	<170	<160	<190	---	---	<160	---	<180
Carbon tetrachloride	ug/Kg	<35	<33	<33	<32	---	---	<34	<32	<39	---	---	<32	---	<36
Chlorobenzene {I}	ug/Kg	<35	<33	<33	<32	<39	---	<34	<32	**940**	---	<33	<32	<35	<36
Chloroethane	ug/Kg	<180	<160	<170	<160	---	---	<170	<160	<190	---	---	<160	---	<180
Chloroform	ug/Kg	<35	<33	<33	<32	---	---	<34	<32	<39	---	---	<32	---	<36
Chloromethane {I}	ug/Kg	<180	<160	<170	<160	---	---	<170	<160	<190	---	---	<160	---	<180
Dibromochloromethane	ug/Kg	<71	<66	<66	<64	---	---	<68	<64	<78	---	---	<64	---	<72
1,1-Dichloroethane	ug/Kg	<35	<33	<33	<32	---	---	<34	<32	<39	---	---	<32	---	<36
1,2-Dichloroethane {I}	ug/Kg	<35	<33	<33	<32	---	---	<34	<32	<39	---	---	<32	---	<36
1,1-Dichloroethylene {I}	ug/Kg	<35	<33	<33	<32	---	---	<34	<32	<39	---	---	<32	---	<36
1,2-Dichloroethylene {I}	ug/Kg	<71	<66	<66	<64	---	---	<68	<64	<78	---	---	<64	---	<72
cis-1,2-Dichloroethylene {I}	ug/Kg	<35	<33	<33	<32	---	---	<34	<32	<39	---	---	<32	---	<36
trans-1,2-Dichloroethylene	ug/Kg	<35	<33	<33	<32	---	---	<34	<32	<39	---	---	<32	---	<36
1,2-Dichloropropane {I}	ug/Kg	<35	<33	<33	<32	---	---	<34	<32	<39	---	---	<32	---	<36
cis-1,3-Dichloropropene {J}	ug/Kg	<35	<33	<33	<32	---	---	<34	<32	<39	---	---	<32	---	<36
1,3-Dichloropropene, total {J}	ug/Kg	<71	<66	<66	<64	---	---	<68	<64	<78	---	---	<64	---	<72
trans-1,3-Dichloropropene {J}	ug/Kg	<35	<33	<33	<32	---	---	<34	<32	<39	---	---	<32	---	<36
Ethyl acetate {I}	ug/Kg	---	---	---	---	---	---	---	---	---	---	---	---	---	---
Ethylbenzene {I}	ug/Kg	<35	<33	<33	<32	---	---	<34	<32	<39	---	---	<32	---	<36
Hexane {I}	ug/Kg	---	---	---	---	---	---	---	---	---	---	---	---	---	---
2-Hexanone {I}	ug/Kg	<180	<160	<170	<160	---	---	<170	<160	<190	---	---	<160	---	<180
Methylene chloride	ug/Kg	<180	<160	<170	<160	---	---	<170	<160	<190	<250	---	<160	---	<180
4-Methyl-2-pentanone (MIBK) {I}	ug/Kg	<180	<160	<170	<160	---	---	<170	<160	<190	---	---	<160	---	<180
Styrene {I}	ug/Kg	<35	<33	<33	<32	---	---	<34	<32	<39	---	---	<32	---	<36
1,1,2,2-Tetrachloroethane	ug/Kg	<71	<66	<66	<64	---	---	<68	<64	<78	---	---	<64	---	<72
Tetrachloroethylene	ug/Kg	<35	<33	<33	<32	---	---	<34	<32	<39	---	---	<32	---	<36
Toluene {I}	ug/Kg	<35	<33	<33	<32	---	---	<34	<32	<39	---	---	<32	---	<36
1,1,1-Trichloroethane	ug/Kg	<35	<33	<33	<32	---	---	<34	<32	<39	---	---	<32	---	<36
1,1,2-Trichloroethane	ug/Kg	<35	<33	<33	<32	---	---	<34	<32	<39	---	---	<32	---	<36
Trichloroethylene	ug/Kg	<35	<33	<33	<32	---	---	<34	<32	<39	---	---	<32	---	<36
Vinyl chloride	ug/Kg	<71	<66	<66	<64	---	---	<68	<64	<78	---	---	<64	---	<72
Xylene (Total) {I}	ug/Kg	<110	<99	<99	<97	---	---	<100	<96	<120	---	---	<97	---	<110
Xylene, o {I}	ug/Kg	<35	<33	<33	<32	---	---	<34	<32	<39	---	---	<32	---	<36
Xylene, p&m {I}	ug/Kg	<71	<66	<66	<64	---	---	<68	<64	<78	---	---	<64	---	<72

Table 1
Summary of Soil Analytical Results - MWD Property
Holland, Michigan

Sample Location		VW-21A	VW-22	VW-23	VW-64A
Lab Sample ID		0308243-01	0305078-08	0305078-07	0309058-02
Sampled By		Horizon	Horizon	Horizon	Horizon
Analyzed By		e-Lab	e-Lab	e-Lab	e-Lab
Sample Date		08/18/2003	05/05/2003	05/05/2003	9/4/2003
Sample Depth (ft.)			7.5'-8.0'	6.0'-6.5'	
Inorganics	*Units*				
Arsenic	mg/Kg	---	**1.6**	**1.4**	**1.3**
Barium {B}	mg/Kg	---	---	---	---
Cadmium {B}	mg/Kg	---	---	---	---
Chromium, Total	mg/Kg	---	**6.3**	**6.1**	---
Copper {B}	mg/Kg	---	**2.7**	**3.8**	---
Lead {B}	mg/Kg	---	---	---	---
Mercury, Total {B,Z}	mg/Kg	---	<0.053	<0.053	---
Selenium {B}	mg/Kg	---	**0.071**	**0.093**	---
Silver {B}	mg/Kg	---	<0.025	<0.024	---
Zinc {B}	mg/Kg	---	---	---	---
Misc.	*Units*				
Isopropyl alcohol {I}	mg/Kg	---	---	---	---
Methanol {I}	mg/Kg	---	---	---	---
Percent Moisture	%	**11**	**5.7**	**5.8**	**10**
PCB's	*Units*				
Aroclor 1016 {J,T}	ug/Kg	---	<310	<310	---
Aroclor 1221 {J,T}	ug/Kg	---	<310	<310	---
Aroclor 1232 {J,T}	ug/Kg	---	<310	<310	---
Aroclor 1242 {J,T}	ug/Kg	---	<310	<310	---
Aroclor 1248 {J,T}	ug/Kg	---	<310	<310	---
Aroclor 1254 {J,T}	ug/Kg	---	<310	<310	---
Aroclor 1260 {J,T}	ug/Kg	---	<310	<310	---
Semi-Volatiles	*Units*				
Acenaphthene	ug/Kg	---	<68	<71	---
Acenaphthylene	ug/Kg	---	<68	<71	---
Aniline	ug/Kg	---	<700	<730	---
Anthracene	ug/Kg	---	<68	<71	---
Benzo(a)anthracene {Q}	ug/Kg	---	<68	<71	---
Benzo(a)pyrene {Q}	ug/Kg	---	<68	<71	---
Benzo(b)fluoranthene {Q}	ug/Kg	---	<68	<71	---
Benzo(g,h,i)perylene	ug/Kg	---	<68	<71	---
Benzo(k)fluoranthene {Q}	ug/Kg	---	<68	<71	---
Benzophenone	ug/Kg	---	<350	<370	---
bis(2-Chloroethoxy)methane	ug/Kg	---	<170	<180	---
bis(2-Chloroethyl)ether {I}	ug/Kg	---	<170	<180	---
bis(2-Chloroisopropyl)ether	ug/Kg	---	<170	<180	---
bis(2-Ethylhexyl)phthalate	ug/Kg	---	<350	<370	---
4-Bromophenyl phenylether	ug/Kg	---	<170	<180	---
Butyl benzyl phthalate	ug/Kg	---	<170	<180	---
Carbazole	ug/Kg	---	<170	<180	---
4-Chloroaniline	ug/Kg	---	<700	<730	---
4-Chloro-3-methylphenol	ug/Kg	---	<170	<180	---
beta-Chloronaphthalene	ug/Kg	---	<170	<180	---
2-Chlorophenol	ug/Kg	---	<170	<180	---

Table 1
Summary of Soil Analytical Results - MWD Property
Holland, Michigan

Sample Location		VW-21A	VW-22	VW-23	VW-64A
Lab Sample ID		0308243-01	0305078-08	0305078-07	0309058-02
Sampled By		Horizon	Horizon	Horizon	Horizon
Analyzed By		e-Lab	e-Lab	e-Lab	e-Lab
Sample Date		08/18/2003	05/05/2003	05/05/2003	9/4/2003
Sample Depth (ft.)			7.5'-8.0'	6.0'-6.5'	
Semi-Volatiles Cont.	*Units*				
4-Chlorophenyl phenylether	ug/Kg	---	<170	<180	---
Chrysene {Q}	ug/Kg	---	<68	<71	---
Dibenzo(a,h)anthracene {Q}	ug/Kg	---	<68	<71	---
Dibenzofuran	ug/Kg	---	<170	<180	---
1,2-Dichlorobenzene	ug/Kg	---	<170	<180	---
1,3-Dichlorobenzene	ug/Kg	---	<170	<180	---
1,4-Dichlorobenzene	ug/Kg	---	<170	<180	---
3,3'-Dichlorobenzidine	ug/Kg	---	<700	<730	---
2,4-Dichlorophenol	ug/Kg	---	<170	<180	---
Diethyl phthalate	ug/Kg	---	<350	<370	---
Dimethyl phthalate	ug/Kg	---	<350	<370	---
2,4-Dimethylphenol	ug/Kg	---	<350	<370	---
Di-n-butyl phthalate	ug/Kg	---	<350	<370	---
2,4-Dinitrophenol	ug/Kg	---	<700	<730	---
2,4-Dinitrotoluene	ug/Kg	---	<170	<180	---
2,6-Dinitrotoluene	ug/Kg	---	<170	<180	---
Di-n-octyl phthalate	ug/Kg	---	<170	<180	---
Dimethylformamide {I}	ug/Kg	---	---	---	---
5,5-Diphenylhydantoin	ug/Kg	---	<350	<370	<380
Fluoranthene	ug/Kg	---	<68	<71	---
Fluorene	ug/Kg	---	<68	<71	---
Hexachlorobenzene (C-66)	ug/Kg	---	<170	<180	---
Hexachlorobutadiene (C-46)	ug/Kg	---	<170	<180	---
Hexachlorocyclopentadiene (C-56	ug/Kg	---	<350	<370	---
Hexachloroethane	ug/Kg	---	<170	<180	---
Indeno(1,2,3-cd)pyrene {Q}	ug/Kg	---	<68	<71	---
Isophorone	ug/Kg	---	<170	<180	---
2-Methyl-4,6-dinitrophenol	ug/Kg	---	<350	<370	---
2-Methylnaphthalene	ug/Kg	---	<170	<180	---
2-Methylphenol {J}	ug/Kg	---	<170	<180	---
4-Methylphenol {J}	ug/Kg	---	<170	<180	---
Naphthalene	ug/Kg	---	<68	<71	---
2-Nitroaniline	ug/Kg	---	<700	<730	---
3-Nitroaniline	ug/Kg	---	<700	<730	---
4-Nitroaniline	ug/Kg	---	<700	<730	---
Nitrobenzene {I}	ug/Kg	---	<170	<180	---
2-Nitrophenol	ug/Kg	---	<170	<180	---
4-Nitrophenol	ug/Kg	---	<700	<730	---
n-Nitroso-di-n-propylamine	ug/Kg	---	<170	<180	---
N-Nitrosodiphenylamine	ug/Kg	---	<170	<180	---
Pentachlorophenol	ug/Kg	---	<350	<370	---
Phenanthrene	ug/Kg	---	<68	<71	---
Phenol	ug/Kg	---	<170	<180	---
Pyrene	ug/Kg	---	<68	<71	---

Table 1
Summary of Soil Analytical Results - MWD Property
Holland, Michigan

Sample Location		VW-21A	VW-22	VW-23	VW-64A
Lab Sample ID		0308243-01	0305078-08	0305078-07	0309058-02
Sampled By		Horizon	Horizon	Horizon	Horizon
Analyzed By		e-Lab	e-Lab	e-Lab	e-Lab
Sample Date		08/18/2003	05/05/2003	05/05/2003	9/4/2003
Sample Depth (ft.)			7.5'-8.0'	6.0'-6.5'	
Semi-Volatiles Cont.	*Units*				
1,2,4-Trichlorobenzene	ug/Kg	---	<170	<180	---
2,4,5-Trichlorophenol	ug/Kg	---	<170	<180	---
2,4,6-Trichlorophenol	ug/Kg	---	<170	<180	---
Volatiles	*Units*				
Acetone {I}	ug/Kg	---	<480	<480	<500
Benzene {I}	ug/Kg	---	<32	<32	---
Bromodichloromethane	ug/Kg	---	<64	<64	---
Bromoform	ug/Kg	---	<64	<64	---
Bromomethane	ug/Kg	---	<160	<160	---
2-Butanone (MEK) {I}	ug/Kg	---	<160	<160	---
Carbon disulfide {I,R}	ug/Kg	---	<160	<160	---
Carbon tetrachloride	ug/Kg	---	<32	<32	---
Chlorobenzene {I}	ug/Kg	---	<32	<32	---
Chloroethane	ug/Kg	---	<160	<160	---
Chloroform	ug/Kg	---	<32	<32	---
Chloromethane {I}	ug/Kg	---	<160	<160	---
Dibromochloromethane	ug/Kg	---	<64	<64	---
1,1-Dichloroethane	ug/Kg	---	<32	<32	---
1,2-Dichloroethane {I}	ug/Kg	---	<32	<32	---
1,1-Dichloroethylene {I}	ug/Kg	---	<32	<32	---
1,2-Dichloroethylene {I}	ug/Kg	---	<64	<64	---
cis-1,2-Dichloroethylene {I}	ug/Kg	---	<32	<32	---
trans-1,2-Dichloroethylene	ug/Kg	---	<32	<32	---
1,2-Dichloropropane {I}	ug/Kg	---	<32	<32	---
cis-1,3-Dichloropropene {J}	ug/Kg	---	<32	<32	---
1,3-Dichloropropene, total {J}	ug/Kg	---	<64	<64	---
trans-1,3-Dichloropropene {J}	ug/Kg	---	<32	<32	---
Ethyl acetate {I}	ug/Kg	---	---	---	---
Ethylbenzene {I}	ug/Kg	---	<32	<32	---
Hexane {I}	ug/Kg	---	---	---	---
2-Hexanone {I}	ug/Kg	---	<160	<160	---
Methylene chloride	ug/Kg	<170	<160	<160	---
4-Methyl-2-pentanone (MIBK) {I}	ug/Kg	---	<160	<160	---
Styrene {I}	ug/Kg	---	<32	<32	---
1,1,2,2-Tetrachloroethane	ug/Kg	---	<64	<64	---
Tetrachloroethylene	ug/Kg	---	<32	<32	---
Toluene {I}	ug/Kg	---	<32	<32	---
1,1,1-Trichloroethane	ug/Kg	---	<32	<32	---
1,1,2-Trichloroethane	ug/Kg	---	<32	<32	---
Trichloroethylene	ug/Kg	---	<32	<32	---
Vinyl chloride	ug/Kg	---	<64	<64	---
Xylene (Total) {I}	ug/Kg	---	<95	<96	---
Xylene, o {I}	ug/Kg	---	<32	<32	---
Xylene, p&m {I}	ug/Kg	---	<64	<64	---

Table 1
Summary of Soil Analytical Results - MWD Property
Holland, Michigan

Criteria from Part 201 RRD Memo, September 28, 2012
» Target Method Detection Limit from MDEQ-ERD Operational Memorandum #2, October 22, 2004

Results Qualifiers:
--- Parameter not analyzed
Bolded value denotes parameter detected above detection limit
Boxes exceed TMDL and Groundwater Surface Water Interface Protection Criteria.
Underlined values exceed TMDL and Non-Residential Drinking Water Protection Criteria

Criteria Qualifiers:
{B} Background, may be substituted if higher than cleanup criterion
{C} Value presented is a screening level based on the chemical-specific generic Csat
{D} Calculated criterion exceeds 100% hence is reduced to 100% or 1.0E+9 ppb
{G} Criterion is dependant upon pH and/or hardness value of the receiving source water.
{I} Hazardous substance may exhibit the characteristic of ignitability
{J} Hazardous substance may be present in several isomer forms and shall be added together for comparison to criteria
{M} Calculated criterion is below the analytical TDL
{Q} Criteria for carcinogenic PAHs were developed using RPPs to benzo(a)pyrene
{R} Hazardous substance may exhibit the characteristic of reactivity
{T} Refer to the TSCA
{W} Concentrations of trihalomethanes in GW must be added together to determine compliance with the MI DW standard of 100 ug/L
{X} GSI shown is not protective for surface water that is used as a drinking water source
{Z} The current TDL for mercury is 0.2 ppb, however, a TDL of 5.0E-4 using U.S. EPA Method 1631, will be required after Sept. 30, 2000
{DD} Hazardous substance causes developmental effects
ID = Inadequate data to develop criterion
IP = Development of generic GSI value in process.
NA = Criterion or value is not available, or not applicable
NLL = Hazardous substance is not likely to leach under most soil conditions
NLV = Hazardous substance is not likely to volatilize under most conditions

Table 2
Summary of Groundwater Analytical Results - MWD Property
Holland, Michigan

Sample Location Lab Sample ID Sampled By Analyzed By Sample Date Sample Depth (Ft.)		Target Method Detection Limit	Non-Residential Drinking Water Criteria	Groundwater Surface Water Interface Criteria	Non-Residential Groundwater Volatilization to Indoor Air Inhalation Criteria	Groundwater Contact Criteria	Final Acute Value Criteria
Inorganics	*Units*						
Arsenic {B} Total	mg/L	5	0.01 {A}	0.01	NLV	4.3	0.68
Barium Total	mg/L	100	2 {A}	1.2 {G,X}	NLV	14000	6.6
Chromium, Total	mg/L	10	0.1 {A}	0.12 {G}	NLV	2.9E+5	2.4
Copper {B} Total	mg/L	4	1 {E}	0.02 {G}	NLV	7400	0.064
Mercury, Total {B,Z}	mg/L	0.001	0.002 {A}	0.0000013	0.056 {S}	0.056 {S}	0.0028 D
Selenium {B} Total	mg/L	5	0.05 {A}	0.005	NLV	970	0.12
Silver {B} Total	mg/L	0.2	0.098	0.0002 {M} :0.00006	NLV	1500	0.0011
Zinc {B} Total	mg/L	50	5 {E}	0.26 {G}	NLV	110000	0.51
Misc.	*Units*						
Biochemical Oxygen Demand	mg/L	NA	NA	NA	NA	NA	NA
Carbonaceous Biochemical Oxygen Demand	mg/L	NA	NA	NA	NA	NA	NA
Chemical Oxygen Demand	mg/L	NA	NA	NA	NA	NA	NA
Nitrogen, Ammonia (total)	mg/L	0.025	10 {N}	{CC}	7100	ID	0.32
Nitrogen, Ammonia, unionized	mg/L	0.025	10 {N}	{CC}	7100	ID	0.32
Nitrogen, Nitrate, total{B,N}	mg/L	0.1	10 {A,N}	ID	NLV	310000	NLS
PCB's	*Units*						
Aroclor 1016	ug/L	0.2	0.5 {A}	0.2 {M} :2.6E-5	45 {S}	3.3 {AA}	ID
Aroclor 1221	ug/L	0.2	0.5 {A}	0.2 {M} :2.6E-5	45 {S}	3.3 {AA}	ID
Aroclor 1232	ug/L	0.2	0.5 {A}	0.2 {M} :2.6E-5	45 {S}	3.3 {AA}	ID
Aroclor 1242	ug/L	0.2	0.5 {A}	0.2 {M} :2.6E-5	45 {S}	3.3 {AA}	ID
Aroclor 1248	ug/L	0.2	0.5 {A}	0.2 {M} :2.6E-5	45 {S}	3.3 {AA}	ID
Aroclor 1254	ug/L	0.2	0.5 {A}	0.2 {M} :2.6E-5	45 {S}	3.3 {AA}	ID
Aroclor 1260	ug/L	0.2	0.5 {A}	0.2 {M} :2.6E-5	45 {S}	3.3 {AA}	ID
Semi-Volatiles	*Units*						
Acenaphthene	ug/L	5	3800	38	4200 {S}	4200 {S}	200
Acenaphthylene	ug/L	5	150	ID	3900 {S}	3900 {S}	ID
Aniline {I}	ug/L	4	220	4.0	NLV	1.4E+5	36
Anthracene	ug/L	5	43 {S}	ID	43 {S}	43 {S}	ID
Benzo(a)anthracene {Q}	ug/L	1	8.5	ID	NLV	9.4 {S,AA}	ID
Benzo(a)pyrene {Q}	ug/L	1	5.0 {A}	ID	NLV	1.0 {M,AA} :0.64	ID
Benzo(b)fluoranthene {Q}	ug/L	1	1.5 {S,AA}	ID	ID	1.5 {S,AA}	ID
Benzo(g,h,i)perylene	ug/L	1	1.0 {M} :0.26 {S}	ID	NLV	1.0 {M,AA} :0.26 {S}	ID
Benzo(k)fluoranthene {Q}	ug/L	1	1.0 {M} :0.8 {S}	NA	NLV	1.0 {M,AA} :0.8 {S}	NA
Benzophenone	ug/L	NA	NA	NA	NA	NA	NA
bis(2-Chloroethoxy)methane	ug/L	5	NA	NA	NA	NA	NA
bis(2-Chloroethyl)ether {I}	ug/L	1	8.3	1.0 {M}: 0.79	2.1E+5	5700	ID
bis(2-Chloroisopropyl)ether	ug/L	5	NA	NA	NA	NA	ID
bis(2-Ethylhexyl)phthalate	ug/L	5	6.0 {A}	25	NLV	320 {AA}	285
4-Bromo diphenyl ether	ug/L	5	NA	NA	NA	NA	NA
Butyl benzyl phthalate	ug/L	5	2700 {S}	67 {X}	NLV	2700 {S}	630
Carbazole	ug/L	10	350	10 {M} :4.0	NLV	7400	72
4-Chloroaniline	ug/L	10	NA	NA	NA	NA	ID

Table 2
Summary of Groundwater Analytical Results - MWD Property
Holland, Michigan

Sample Location Lab Sample ID Sampled By Analyzed By Sample Date Sample Depth (Ft.)		Target Method Detection Limit	Non-Residential Drinking Water Criteria	Groundwater Surface Water Interface Criteria	Non-Residential Groundwater Volatilization to Indoor Air Inhalation Criteria	Groundwater Contact Criteria	Final Acute Value Criteria
Semi-Volatiles Cont.	*Units*						
4-Chloro-3-methylphenol	ug/L	5	420	7.4	NLV	79000	130
beta-Chloronaphthalene	ug/L	5	5200	NA	ID	6700 {S}	NA
2-Chlorophenol	ug/L	10	130	18	1.1E+6	94000	320
4-Chloro diphenyl ether	ug/L	5	NA	NA	NA	NA	NA
Chrysene {Q}	ug/L	1	1.6 {S}	ID	ID	1.6 {S,AA}	ID
Dibenzo(a,h)anthracene {Q}	ug/L	2	2.0 {M} :0.85	ID	NLV	2.0 {M,AA} :0.31	ID
Dibenzofuran	ug/L	4	ID	4.0	10000 {S}	ID	72
1,2-Dichlorobenzene	ug/L	1	600 {A}	13	1.6E+5 {S}	1.6E+5 {S}	240
1,3-Dichlorobenzene	ug/L	1	19	28	41000	2000	200
1,4-Dichlorobenzene	ug/L	1	75 {A}	17	74000 {S}	6400	210
3,3'-Dichlorobenzidine	ug/L	0.3	4.3	0.3 {M}:0.2	NLV	180	81
2,4-Dichlorophenol	ug/L	10	210	11	NLV	48000	180
Diethyl phthalate	ug/L	5	16000	110	NLV	1.1E+6 {S}	2000
Dimethyl phthalate	ug/L	5	2.1E+5	NA	NLV	4.2E+6 {S}	NA
2,4-Dimethylphenol	ug/L	5	1000	380	NLV	5.2E+5	2700
Di-n-butyl phthalate	ug/L	5	2500	9.7	NLV	11000 {S}	75
2,4-Dinitrophenol	ug/L	25	NA	NA	NA	NA	270
2,4-Dinitrotoluene	ug/L	5	32	NA	NLV	8600	NA
2,6-Dinitrotoluene	ug/L	5	NA	NA	NA	NA	NA
Di-n-octyl phthalate	ug/L	5	380	ID	NLV	400	ID
5,5-Diphenylhydantoin	ug/L	NA	68	89 {X}	NLV	14000	2200
Fluoranthene	ug/L	1	210 {S}	1.6	210 {S}	210 {S}	28
Fluorene	ug/L	5	2000 {S}	12	2000 {S}	2000 {S}	220
Hexachlorobenzene (C-66)	ug/L	0.2	1.0 {A}	0.2 {M} :0.0003	3000	4.6	ID
Hexachlorobutadiene (C-46)	ug/L	0.05	42	0.053	3200 {S}	400	15
Hexachlorocyclopentadiene (C-56)	ug/L	5	50 {A}	ID	420	1600	ID
Hexachloroethane	ug/L	5	21	6.7 {X}	50000 {S}	1900	210
Indeno(1,2,3-cd)pyrene {Q}	ug/L	2	2.0 {M} :0.022 {S}	ID	NLV	2.0 {M} :0.022 {S}	ID
Isophorone	ug/L	5	3100	1300 {X}	NLV	9.9E+5	9200
2-Methyl-4,6-dinitrophenol	ug/L	20	20 {M} :7.3	NA	NLV	9500	NA
2-Methylnaphthalene	ug/L	5	750	19	25000 {S}	25000 {S}	340
2-Methylphenol {J}	ug/L	10	1000	30 {M}: 25	NLV	8.1E+5	1500
3-Methylphenol {J}	ug/L	10	1000	30 {M}: 25	NLV	8.1E+5	450
4-Methylphenol {J}	ug/L	10	1000	30 {M}: 25	NLV	8.1E+5	450
Naphthalene	ug/L	5	1500	11	31000 {S}	31000 {S}	200
2-Nitroaniline	ug/L	25	NA	NA	NA	NA	NA
3-Nitroaniline	ug/L	25	NA	NA	NA	NA	NA
4-Nitroaniline	ug/L	25	NA	NA	NA	NA	NA
Nitrobenzene {I}	ug/L	3	9.6	180 {X}	5.5E+5	11000	2100
2-Nitrophenol	ug/L	5	58	ID	NLV	79000	1000
4-Nitrophenol	ug/L	25	NA	NA	NA	NA	1900
n-Nitroso-di-n-propylamine	ug/L	5	5.0 {M} :0.77	NA	NLV	360	NA

Table 2
Summary of Groundwater Analytical Results - MWD Property
Holland, Michigan

Sample Location Lab Sample ID Sampled By Analyzed By Sample Date Sample Depth (Ft.)		Target Method Detection Limit	Non-Residential Drinking Water Criteria	Groundwater Surface Water Interface Criteria	Non-Residential Groundwater Volatilization to Indoor Air Inhalation Criteria	Groundwater Contact Criteria	Final Acute Value Criteria
Semi-Volatiles Cont.	*Units*						
N-Nitrosodiphenylamine	ug/L	5	1100	NA	NLV	35000 {S}	NA
Pentachlorophenol	ug/L	1	1.0 {A}	{G,X}	NLV	200	Calc.
Phenanthrene	ug/L	2	150	2.0 {M}: 1.4	1000 {S}	1000 {S}	9.4
Phenol	ug/L	5	13000	450	NLV	2.9E+7	6800
Pyrene	ug/L	5	140 {S}	ID	140 {S}	140 {S}	ID
1,2,4-Trichlorobenzene	ug/L	5	70 {A}	99 {X}	3.0E+5 {S}	19000	850
2,4,5-Trichlorophenol	ug/L	5	2100	NA	NLV	1.7E+5	NA
2,4,6-Trichlorophenol	ug/L	4	470	5.0	NLV	10000	79
Volatiles	*Units*						
Acetone {I}	ug/L	50	2100	1700	1.0E+9 {D,S}	3.1E+7	30000
Benzene {I}	ug/L	1	5.0 {A}	200 {X}	35000	11000	1900
Bromodichloromethane	ug/L	1	80 {A,W}	ID	37000	14000	ID
Bromoform	ug/L	1	80 {A,W}	ID	3.1E+6 {S}	1.4E+5	ID
Bromomethane	ug/L	5	29	35	9000	70000	640
2-Butanone (MEK) {I}	ug/L	25	38000	2200	2.4E+8 {S}	2.4E+8 {S}	40000
Carbon disulfide {I,R}	ug/L	5	2300	ID	5.5E+5	1.2E+6 {S}	ID
Carbon tetrachloride	ug/L	1	5.0 {A}	45 {X}	2400	4600	1400
Chlorobenzene {I}	ug/L	1	100 {A}	25	4.7E+5 {S}	86000	450
Chloroethane {I}	ug/L	5	1700	1100 {X}	5.7E+6 {S}	4.4E+5	20000
Chloroform	ug/L	1	80 {A,W}	350	1.8E+5	1.5E+5	11000
Chloromethane {I}	ug/L	5	1100	ID	45000	4.9E+5	ID
Dibromochloromethane	ug/L	5	80 {A,W}	ID	1.1E+5	18000	ID
1,1-Dichloroethane {I}	ug/L	1	2500	740	2.3E+6	2.4E+6	13000
1,2-Dichloroethane {I}	ug/L	1	5.0 {A}	360 {X}	59000	19000	16000
1,1-Dichloroethylene {I}	ug/L	1	7.0 {A}	130	1300	11000	2300
cis-1,2-Dichloroethylene {I}	ug/L	1	70 {A}	620	2.1E+5	2.0E+5	11000
1,2-Dichloroethene, Total	ug/L	1	70 {A}	620	2.1E+5	2.0E+5	19000
trans-1,2-Dichloroethylene	ug/L	1	100 {A}	1500 {X}	2.0E+5	2.2E+5	28000
1,2-Dichloropropane {I}	ug/L	1	5.0 {A}	230 {X}	36000	16000	4000
cis-1,3-Dichloropropene {I,J}	ug/L	1	35	9.0 {X}	26000	5500	160
trans-1,3-Dichloropropene {I, J}	ug/L	1	35	9.0 {X}	26000	5500	160
total-1,3-Dichloropropene {I, J}	ug/L	1	35	9.0 {X}	26000	5500	160
Ethylbenzene {I}	ug/L	1	74 {E}	18	1.7E+5 {S}	1.7E+5 {S}	320
2-Hexanone {I}	ug/L	50	2900	ID	8.7E+6	5.2E+6	ID
Methylene chloride	ug/L	5	5.0 {A}	1500 {X}	1.4E+6	2.2E+5	17000
4-Methyl-2-pentanone (MIBK) {I}	ug/L	50	5200	ID	2.0E+7 {S}	1.3E+7	ID
Styrene {I}	ug/L	1	100 {A}	80 {X}	3.1E+5 {S}	9700	2900
1,1,2,2-Tetrachloroethane	ug/L	1	35	78 {X}	77000	4700	1800
Tetrachloroethylene	ug/L	1	5.0 {A}	60 {X}	1.7E+5	12000	2900
Toluene {I}	ug/L	1	790 {E}	270	5.3E+5 {S}	5.3E+5 {S}	2600
1,1,1-Trichloroethane	ug/L	1	200 {A}	89	1.3E+6 {S}	1.3E+6 {S}	1600
1,1,2-Trichloroethane	ug/L	1	5.0 {A}	330 {X}	1.1E+5	21000	6400

Table 2
Summary of Groundwater Analytical Results - MWD Property
Holland, Michigan

Sample Location Lab Sample ID Sampled By Analyzed By Sample Date Sample Depth (Ft.)		Target Method Detection Limit	Non-Residential Drinking Water Criteria	Groundwater Surface Water Interface Criteria	Non-Residential Groundwater Volatilization to Indoor Air Inhalation Criteria	Groundwater Contact Criteria	Final Acute Value Criteria
Volatiles Cont.	*Units*						
Trichloroethylene	ug/L	1	5.0 {A}	200 {X}	4900	22000	3500
Vinyl chloride	ug/L	1	2.0 {A}	13 {X}	13000	1000	17000
Xylene, o	ug/L	1	280 {E}	41	1.9E+5 {S}	1.9E+5 {S}	730
Xylene, p&m	ug/L	2	280 {E}	41	1.9E+5 {S}	1.9E+5 {S}	730
Xylene (Total)	ug/L	3	280 {E}	41	1.9E+5 {S}	1.9E+5 {S}	730

Table 2
Summary of Groundwater Analytical Results - MWD Property
Holland, Michigan

Sample Location		MW-MWD-1	MW-MWD-1	MW-MWD-1	MW-MWD-1	MW-MWD-1	MW-MWD-1	MW-MWD-1	MW-MWD-1	MW-MWD-1	MW-MWD-1	MW-MWD-1	MW-MWD-1	MW-MWD-1	MW-MWD-1
Lab Sample ID		0311347-02	0401242-06	0405205-08	0407439-18	0410438-07	0503423-02	0506565-01	0512430-01	0609569-01	0709267-04	0809275-02	0904029-08	1002267-08	1106436-4
Sampled By		Horizon	Horizon	Horizon	Horizon	Horizon	Horizon	Horizon	Horizon	Horizon	Horizon	Horizon	Horizon	Horizon	Horizon
Analyzed By		e-Lab	e-Lab	e-Lab	e-Lab	e-Lab.	e-Lab.	e-Lab.	e-Lab.	e-Lab.	e-Lab	ALS	ALS	ALS	ALS
Sample Date		11/25/2003	1/22/2004	5/12/2004	7/29/2004	10/21/2004	3/24/2005	6/28/2005	12/21/2005	9/28/2006	9/13/2007	9/10/2008	4/1/2009	2/15/2010	6/15/2011
Sample Depth (Ft.)															
Inorganics	*Units*														
Arsenic {B} Total	mg/L	<0.001	---	<0.010	---	---	---	---	---	---	---	---	---	---	---
Barium Total	mg/L	---	---	**0.12**	---	---	---	---	---	---	---	---	---	---	---
Chromium, Total	mg/L	<0.005	---	<0.0050	---	---	---	---	---	---	---	---	---	---	---
Copper {B} Total	mg/L	<0.025	---	<0.020	---	---	---	---	---	---	---	---	---	---	---
Mercury, Total {B,Z}	mg/L	<0.0002	---	<0.00020	---	---	---	---	---	---	---	---	---	---	---
Selenium {B} Total	mg/L	**0.0057**	---	<0.0020	---	---	---	---	---	---	---	---	---	---	---
Silver {B} Total	mg/L	<0.0005	---	<0.00050	---	---	---	---	---	---	---	---	---	---	---
Zinc {B} Total	mg/L	---	---	<0.010	---	---	---	---	---	---	---	---	---	---	---
Misc.	*Units*														
Biochemical Oxygen Demand	mg/L	---	---	<2.4	---	---	---	---	---	---	---	---	---	---	---
Carbonaceous Biochemical Oxygen Demand	mg/L	---	---	<2.0	---	---	---	---	---	---	---	---	---	---	---
Chemical Oxygen Demand	mg/L	---	---	**91**	---	---	---	---	---	---	---	---	---	---	---
Nitrogen, Ammonia (total)	mg/L	---	---	**1.1**	---	---	---	---	---	---	---	---	---	---	---
Nitrogen, Ammonia, unionized	mg/L	---	---	**0.08**	---	---	---	---	---	---	---	---	---	---	---
Nitrogen, Nitrate, total{B,N}	mg/L	---	---	---	<0.10	---	---	---	---	---	---	---	---	---	---
PCB's	*Units*														
Aroclor 1016	ug/L	<0.20	---	---	---	---	---	---	---	---	---	---	---	---	---
Aroclor 1221	ug/L	<0.20	---	---	---	---	---	---	---	---	---	---	---	---	---
Aroclor 1232	ug/L	<0.40	---	---	---	---	---	---	---	---	---	---	---	---	---
Aroclor 1242	ug/L	<0.20	---	---	---	---	---	---	---	---	---	---	---	---	---
Aroclor 1248	ug/L	<0.20	---	---	---	---	---	---	---	---	---	---	---	---	---
Aroclor 1254	ug/L	<0.20	---	---	---	---	---	---	---	---	---	---	---	---	---
Aroclor 1260	ug/L	<0.20	---	---	---	---	---	---	---	---	---	---	---	---	---
Semi-Volatiles	*Units*														
Acenaphthene	ug/L	<5.1	<5.0	<5.0	<5.0	<5.0	<5.0	<5.1	<5.0	<5	<5	<5	<5.0	<5.0	<5.0
Acenaphthylene	ug/L	<5.1	<5.0	<5.0	<5.0	<5.0	<5.0	<5.1	<5.0	<5	<5	<5	<5.0	<5.0	<5.0
Aniline {I}	ug/L	<20	<20	<20	<20	<20	<4.0	<4.1	<4.0	<4	<4	<4	<4.0	<4.0	<20
Anthracene	ug/L	<5.1	<5.0	<5.0	<5.0	<5.0	<5.0	<5.1	<5.0	<5	<5	<5	<5.0	<5.0	<5.0
Benzo(a)anthracene {Q}	ug/L	<1.0	<1.0	<5.0	<1.0	<1.0	<1.0	<1.0	<1.0	<1	<1	<1	<1.0	<1.0	<1.0
Benzo(a)pyrene {Q}	ug/L	<2.0	<2.0	<5.0	<2.0	<2.0	<1.0	<1.0	<1.0	<1	<1	<1	<1.0	<1.0	<2.0
Benzo(b)fluoranthene {Q}	ug/L	<2.0	<2.0	<5.0	<2.0	<2.0	<1.0	<1.0	<1.0	<1	<1	<1	<1.0	<1.0	<2.0
Benzo(g,h,i)perylene	ug/L	<5.1	<5.0	<5.0	<5.0	<5.0	<1.0	<1.0	<1.0	<1	<1	<1	<1.0	<1.0	<5.0
Benzo(k)fluoranthene {Q}	ug/L	<5.1	<5.0	<5.0	<5.0	<5.0	<1.0	<1.0	<1.0	<1	<1	<1	<1.0	<1.0	<5.0
Benzophenone	ug/L	<51	<50	<50	<50	<50	<50	<51	<50	<50	<50	<50	<50	<50	<50
bis(2-Chloroethoxy)methane	ug/L	<5.1	<5.0	<5.0	<5.0	<5.0	<5.0	<5.1	<5.0	<5	<5	<5	<5.0	<5.0	<5.0
bis(2-Chloroethyl)ether {I}	ug/L	<1.0	<1.0	<5.0	<1.0	<1.0	<1.0	<1.0	<1.0	<1	<1	<1	<1.0	<1.0	<5.0
bis(2-Chloroisopropyl)ether	ug/L	<5.1	<5.0	<5.0	<5.0	<5.0	<5.0	<5.1	<5.0	<5	<5	<5	<5.0	<5.0	<5.0
bis(2-Ethylhexyl)phthalate	ug/L	<5.1	<5.0	<5.0	<5.0	<5.0	<5.0	<5.1	<5.0	<5	<5	<5	<5.0	<5.0	<5.0
4-Bromo diphenyl ether	ug/L	<5.1	<5.0	<5.0	<5.0	<5.0	<5.0	<5.1	<5.0	<5	<5	<5	<5.0	<5.0	<5.0
Butyl benzyl phthalate	ug/L	<5.1	<5.0	<5.0	<5.0	<5.0	<5.0	<5.1	<5.0	<5	<5	<5	<5.0	<5.0	<5.0
Carbazole	ug/L	<10	<10	<10	<10	<10	<10	<10	<10	<10	<10	<10	<10	<10	<10
4-Chloroaniline	ug/L	<20	<20	<20	<20	<20	<10	<10	<10	<10	<10	<10	<10	<10	<20

Table 2
Summary of Groundwater Analytical Results - MWD Property
Holland, Michigan

Sample Location		MW-MWD-1	MW-MWD-1	MW-MWD-1	MW-MWD-1	MW-MWD-1	MW-MWD-1	MW-MWD-1	MW-MWD-1	MW-MWD-1	MW-MWD-1	MW-MWD-1	MW-MWD-1	MW-MWD-1	MW-MWD-1
Lab Sample ID		0311347-02	0401242-06	0405205-08	0407439-18	0410438-07	0503423-02	0506565-01	0512430-01	0609569-01	0709267-04	0809275-02	0904029-08	1002267-08	1106436-4
Sampled By		Horizon	Horizon	Horizon	Horizon	Horizon	Horizon	Horizon	Horizon	Horizon	Horizon	Horizon	Horizon	Horizon	Horizon
Analyzed By		e-Lab	e-Lab	e-Lab	e-Lab	e-Lab.	e-Lab.	e-Lab.	e-Lab.	e-Lab.	e-Lab	ALS	ALS	ALS	ALS
Sample Date		11/25/2003	1/22/2004	5/12/2004	7/29/2004	10/21/2004	3/24/2005	6/28/2005	12/21/2005	9/28/2006	9/13/2007	9/10/2008	4/1/2009	2/15/2010	6/15/2011
Sample Depth (Ft.)															
Semi-Volatiles Cont.	*Units*														
4-Chloro-3-methylphenol	ug/L	<5.1	<5.0	<5.0	<5.0	<5.0	<5.0	<5.1	<5.0	<5	<5	<5	<5.0	<5.0	<5.0
beta-Chloronaphthalene	ug/L	<5.1	<5.0	<5.0	<5.0	<5.0	<5.0	<5.1	<5.0	<5	<5	<5	<5.0	<5.0	<5.0
2-Chlorophenol	ug/L	<5.1	<5.0	<5.0	<5.0	<5.0	<10	<10	<10	<10	<10	<10	<5.0	<5.0	<5.0
4-Chloro diphenyl ether	ug/L	<5.1	<5.0	<5.0	<5.0	<5.0	<5.0	<5.1	<5.0	<5	<5	<5	<5.0	<5.0	<5.0
Chrysene {Q}	ug/L	<5.1	<5.0	<5.0	<5.0	<5.0	<1.0	<1.0	<1.0	<1	<1	<1	<1.0	<1.0	<5.0
Dibenzo(a,h)anthracene {Q}	ug/L	<2.0	<2.0	<5.0	<2.0	<2.0	<2.0	<2.0	<2.0	<2	<2	<2	<2.0	<2.0	<5.0
Dibenzofuran	ug/L	<5.1	<5.0	<5.0	<5.0	<5.0	<4.0	<4.1	<4.0	<4	<4	<4	<4.0	<4.0	<5.0
1,2-Dichlorobenzene	ug/L	<5.1	<5.0	<5.0	<5.0	<5.0	<1.0	<1.0	<1.0	<1	<1	<1	<1.0	<1.0	<1.0
1,3-Dichlorobenzene	ug/L	<5.1	<5.0	<5.0	<5.0	<5.0	<1.0	<1.0	<1.0	<1	<1	<1	<1.0	<1.0	<1.0
1,4-Dichlorobenzene	ug/L	<5.1	<5.0	<5.0	<5.0	<5.0	<1.0	<1.0	<1.0	<1	<1	<1	<1.0	<1.0	<1.0
3,3'-Dichlorobenzidine	ug/L	<20	<20	<20	<20	<20	<0.39	<0.40	<0.39	<0.39	<0.39	<0.39	<0.39	<0.39	<0.30
2,4-Dichlorophenol	ug/L	<10	<10	<10	<10	<10	<10	<10	<10	<10	<10	<10	<10	<10	<10
Diethyl phthalate	ug/L	<20	<20	<20	<20	<20	<5.0	<5.1	<5.0	<5	<5	<5	<5.0	<5.0	<5.0
Dimethyl phthalate	ug/L	<20	<20	<20	<20	<20	<5.0	<5.1	<5.0	<5	<5	<5	<5.0	<5.0	<5.0
2,4-Dimethylphenol	ug/L	<5.1	<5.0	<5.0	<5.0	<5.0	<5.0	<5.1	<5.0	<5	<5	<5	<5.0	<5.0	<5.0
Di-n-butyl phthalate	ug/L	<5.1	<5.0	<5.0	<5.0	<5.0	<5.0	<5.1	<5.0	<5	<5	<5	<5.0	<5.0	<5.0
2,4-Dinitrophenol	ug/L	<20	<20	<20	<20	<20	<25	<26	<25	<25	<25	<25	<20	<20	<20
2,4-Dinitrotoluene	ug/L	<5.1	<5.0	<5.0	<5.0	<5.0	<5.0	<5.1	<5.0	<5	<5	<5	<5.0	<5.0	<5.0
2,6-Dinitrotoluene	ug/L	<5.1	<5.0	<5.0	<5.0	<5.0	<5.0	<5.1	<5.0	<5	<5	<5	<5.0	<5.0	<5.0
Di-n-octyl phthalate	ug/L	<5.1	<5.0	<5.0	<5.0	<5.0	<5.0	<5.1	<5.0	<5	<5	<5	<5.0	<5.0	<5.0
5,5-Diphenylhydantoin	ug/L	**52**	**41**	**33**	**34**	<30	**46**	**32**	**46**	<30	<30	<30	<30	<30	**43**
Fluoranthene	ug/L	<5.1	<5.0	<5.0	<5.0	<5.0	<1.0	<1.0	<1.0	<1	<1	<1	<1.0	<1.0	<5.0
Fluorene	ug/L	<5.1	<5.0	<5.0	<5.0	<5.0	<5.0	<5.1	<5.0	<5	<5	<5	<5.0	<5.0	<5.0
Hexachlorobenzene (C-66)	ug/L	<5.1	<5.0	<5.0	<5.0	<5.0	<0.20	<0.20	<0.20	<0.2	<0.2	<0.2	<0.20	<0.20	<5.0
Hexachlorobutadiene (C-46)	ug/L	<5.1	<5.0	<5.0	<5.0	<5.0	<0.20	<0.20	<0.20	<0.3	<0.3	<0.3	<0.30	<0.30	<5.0
Hexachlorocyclopentadiene (C-56)	ug/L	<5.1	<5.0	<5.0	<5.0	<5.0	<5.0	<5.1	<5.0	<5	<5	<5	<5.0	<5.0	<5.0
Hexachloroethane	ug/L	<5.1	<5.0	<5.0	<5.0	<5.0	<5.0	<5.1	<5.0	<5	<5	<5	<5.0	<5.0	<5.0
Indeno(1,2,3-cd)pyrene {Q}	ug/L	<2.0	<2.0	<5.0	<2.0	<2.0	<2.0	<2.0	<2.0	<2	<2	<2	<2.0	<2.0	<2.0
Isophorone	ug/L	<5.1	<5.0	<5.0	<5.0	<5.0	<5.0	<5.1	<5.0	<5	<5	<5	<5.0	<5.0	<5.0
2-Methyl-4,6-dinitrophenol	ug/L	<20	<20	<20	<20	<20	<20	<20	<20	<20	<20	<20	<20	<20	<20
2-Methylnaphthalene	ug/L	<5.1	<5.0	<5.0	<5.0	<5.0	<5.0	<5.1	<5.0	<5	<5	<5	<5.0	<5.0	<5.0
2-Methylphenol {J}	ug/L	<5.1	<5.0	<5.0	<5.0	<5.0	<10	<10	<10	<10	<10	<10	<5.0	<5.0	<5.0
3-Methylphenol {J}	ug/L	---	---	---	---	---	---	---	---	---	---	---	---	---	---
4-Methylphenol {J}	ug/L	<5.1	<5.0	<5.0	<5.0	<5.0	<10	<10	<10	<10	<10	<10	<5.0	<5.0	<5.0
Naphthalene	ug/L	<5.1	<5.0	<5.0	<5.0	<5.0	<5.0	<5.1	<5.0	<5	<5	<5	<5.0	<5.0	<5.0
2-Nitroaniline	ug/L	<20	<20	<20	<20	<20	<25	<26	<25	<25	<25	<25	<20	<20	<20
3-Nitroaniline	ug/L	<20	<20	<20	<20	<20	<25	<26	<25	<25	<25	<25	<20	<20	<20
4-Nitroaniline	ug/L	<20	<20	<20	<20	<20	<25	<26	<25	<25	<25	<25	<20	<20	<20
Nitrobenzene {I}	ug/L	<2.0	<2.0	<5.0	<2.0	<2.0	<3.0	<3.1	<3.0	<3	<3	<3	<2.0	<2.0	<5.0
2-Nitrophenol	ug/L	<5.1	<5.0	<5.0	<5.0	<5.0	<5.0	<5.1	<5.0	<5	<5	<5	<5.0	<5.0	<5.0
4-Nitrophenol	ug/L	<20	<20	<20	<20	<20	<25	<26	<25	<25	<25	<25	<20	<20	<20
n-Nitroso-di-n-propylamine	ug/L	<5.1	<5.0	<5.0	<5.0	<5.0	<5.0	<5.1	<5.0	<5	<5	<5	<5.0	<5.0	<5.0

Table 2
Summary of Groundwater Analytical Results - MWD Property
Holland, Michigan

Sample Location		MW-MWD-1	MW-MWD-1	MW-MWD-1	MW-MWD-1	MW-MWD-1	MW-MWD-1	MW-MWD-1	MW-MWD-1	MW-MWD-1	MW-MWD-1	MW-MWD-1	MW-MWD-1	MW-MWD-1	MW-MWD-1
Lab Sample ID		0311347-02	0401242-06	0405205-08	0407439-18	0410438-07	0503423-02	0506565-01	0512430-01	0609569-01	0709267-04	0809275-02	0904029-08	1002267-08	1106436-4
Sampled By		Horizon	Horizon	Horizon	Horizon	Horizon	Horizon	Horizon	Horizon	Horizon	Horizon	Horizon	Horizon	Horizon	Horizon
Analyzed By		e-Lab	e-Lab	e-Lab	e-Lab	e-Lab.	e-Lab.	e-Lab.	e-Lab.	e-Lab.	e-Lab	ALS	ALS	ALS	ALS
Sample Date		11/25/2003	1/22/2004	5/12/2004	7/29/2004	10/21/2004	3/24/2005	6/28/2005	12/21/2005	9/28/2006	9/13/2007	9/10/2008	4/1/2009	2/15/2010	6/15/2011
Sample Depth (Ft.)															
Semi-Volatiles Cont.	*Units*														
N-Nitrosodiphenylamine	ug/L	<5.1	<5.0	<5.0	<5.0	<5.0	<5.0	<5.1	<5.0	<5	<5	<5	<5.0	<5.0	<5.0
Pentachlorophenol	ug/L	<20	<20	<20	<20	<20	<2.0	<2.0	<2.0	<2	<2	<2	<2.0	<2.0	<20
Phenanthrene	ug/L	<5.1	<5.0	<5.0	<5.0	<5.0	<2.0	<2.0	<2.0	<2	<2	<2	<2.0	<2.0	<5.0
Phenol	ug/L	<5.1	<5.0	<5.0	<5.0	<5.0	<5.0	<5.1	<5.0	<5	<5	**10**	<5.0	<5.0	<5.0
Pyrene	ug/L	<5.1	<5.0	<5.0	<5.0	<5.0	<5.0	<5.1	<5.0	<5	<5	<5	<5.0	<5.0	<5.0
1,2,4-Trichlorobenzene	ug/L	<5.1	<5.0	<5.0	<5.0	<5.0	<5.0	<5.1	<5.0	<5	<5	<5	<5.0	<5.0	<5.0
2,4,5-Trichlorophenol	ug/L	<5.1	<5.0	<5.0	<5.0	<5.0	<5.0	<5.1	<5.0	<5	<5	<5	<5.0	<5.0	<5.0
2,4,6-Trichlorophenol	ug/L	<4.0	<4.0	<5.0	<4.0	<4.0	<4.0	<4.1	<4.0	<4	<4	<4	<4.0	<4.0	<4.0
Volatiles	*Units*														
Acetone {I}	ug/L	<25	<25	<20	<25	<25	<50	<50	<50	<50	<50	<50	<25	<25	<20
Benzene {I}	ug/L	<1.0	<1.0	<1.0	<1.0	<1.0	<1.0	<1.0	<1.0	<1	<1	<1.0	<1.0	<1.0	**3.5**
Bromodichloromethane	ug/L	<1.0	<1.0	<1.0	<1.0	<1.0	<1.0	<1.0	<1.0	<1	<1	<1.0	<1.0	<1.0	<1.0
Bromoform	ug/L	<1.0	<1.0	<1.0	<1.0	<1.0	<1.0	<1.0	<1.0	<1	<1	<1.0	<1.0	<1.0	<1.0
Bromomethane	ug/L	<1.0	<1.0	<1.0	<1.0	<1.0	<5.0	<5.0	<5.0	<5	<5	<5.0	<1.0	<1.0	<1.0
2-Butanone (MEK) {I}	ug/L	<5.0	<5.0	<5.0	<5.0	<5.0	<25	<25	<25	<25	<25	<25	<25	<25	<5.0
Carbon disulfide {I,R}	ug/L	<2.5	<2.5	<2.5	<2.5	<2.5	<5.0	<5.0	<5.0	<5	<5	<5.0	<5.0	<5.0	<2.5
Carbon tetrachloride	ug/L	<1.0	<1.0	<1.0	<1.0	<1.0	<1.0	<1.0	<1.0	<1	<1	<1.0	<1.0	<1.0	<1.0
Chlorobenzene {I}	ug/L	**17**	**19**	**10**	**5.9**	**7.8**	**4.5**	**3.4**	**4.4**	**5.3**	**4.4**	**2.6**	**1.4**	**2.2**	**41**
Chloroethane {I}	ug/L	<1.0	<1.0	<1.0	<1.0	<1.0	<5.0	<5.0	<5.0	<5	<5	<5.0	<1.0	<1.0	<1.0
Chloroform	ug/L	<1.0	<1.0	<1.0	<1.0	<1.0	<1.0	<1.0	<1.0	<1	<1	<1.0	<1.0	<1.0	<1.0
Chloromethane {I}	ug/L	<1.0	<1.0	<1.0	<1.0	<1.0	<5.0	<5.0	<5.0	<5	<5	<5.0	<1.0	<1.0	<1.0
Dibromochloromethane	ug/L	<1.0	<1.0	<1.0	<1.0	<1.0	<5.0	<5.0	<5.0	<5	<5	<5.0	<1.0	<1.0	<1.0
1,1-Dichloroethane {I}	ug/L	<1.0	<1.0	<1.0	<1.0	<1.0	<1.0	<1.0	<1.0	<1	<1	<1.0	<1.0	<1.0	<1.0
1,2-Dichloroethane {I}	ug/L	<1.0	<1.0	<1.0	<1.0	<1.0	<1.0	<1.0	<1.0	<1	<1	<1.0	<1.0	<1.0	<1.0
1,1-Dichloroethylene {I}	ug/L	<1.0	<1.0	<1.0	<1.0	<1.0	<1.0	<1.0	<1.0	<1	<1	<1.0	<1.0	<1.0	<1.0
cis-1,2-Dichloroethylene {I}	ug/L	<1.0	<1.0	<1.0	<1.0	<1.0	<1.0	<1.0	<1.0	<1	<1	<1.0	<1.0	<1.0	<1.0
1,2-Dichloroethene, Total	ug/L	<2.0	<2.0	<2.0	<2.0	<2.0	<1.0	<1.0	<1.0	<1	<2.0	<1.0	<1.0	<1.0	<2.0
trans-1,2-Dichloroethylene	ug/L	<1.0	<1.0	<1.0	<1.0	<1.0	<1.0	<1.0	<1.0	<1	<1	<1.0	<1.0	<1.0	<1.0
1,2-Dichloropropane {I}	ug/L	<1.0	<1.0	<1.0	<1.0	<1.0	<1.0	<1.0	<1.0	<1	<2.0	<1.0	<1.0	<1.0	<2.0
cis-1,3-Dichloropropene {I,J}	ug/L	<1.0	<1.0	<1.0	<1.0	<1.0	<1.0	<1.0	<1.0	<1	<1	<1.0	<1.0	<1.0	<1.0
trans-1,3-Dichloropropene {I, J}	ug/L	<1.0	<1.0	<1.0	<1.0	<1.0	<1.0	<1.0	<1.0	<1	<1	<1.0	<1.0	<1.0	<1.0
total-1,3-Dichloropropene {I, J}	ug/L	<2.0	<2.0	<2.0	<2.0	<2.0	<1.0	<1.0	<1.0	<1	<2.0	<1.0	<1.0	<1.0	<2.0
Ethylbenzene {I}	ug/L	<1.0	<1.0	<1.0	<1.0	<1.0	<1.0	<1.0	<1.0	<1	<1	<1.0	<1.0	<1.0	<1.0
2-Hexanone {I}	ug/L	<50	<50	<5.0	<50	<50	<50	<50	<50	<50	<50	<50	<50	<50	<5.0
Methylene chloride	ug/L	<5.0	<5.0	<5.0	<5.0	<5.0	<5.0	<5.0	<5.0	<5	<5	<5.0	<5.0	<5.0	<5.0
4-Methyl-2-pentanone (MIBK) {I}	ug/L	<50	<50	<5.0	<50	<50	<50	<50	<50	<50	<50	<50	<50	<50	<5.0
Styrene {I}	ug/L	<1.0	<1.0	<1.0	<1.0	<1.0	<1.0	<1.0	<1.0	<1	<1	<1.0	<1.0	<1.0	<1.0
1,1,2,2-Tetrachloroethane	ug/L	<1.0	<1.0	<1.0	<1.0	<1.0	<1.0	<1.0	<1.0	<1	<1	<1.0	<1.0	<1.0	<1.0
Tetrachloroethylene	ug/L	<1.0	<1.0	<1.0	<1.0	<1.0	<1.0	<1.0	<1.0	<1	<2.0	<1.0	<1.0	<1.0	<2.0
Toluene {I}	ug/L	<1.0	<1.0	<1.0	<1.0	<1.0	<1.0	<1.0	<1.0	<1	<1	<1.0	<1.0	<1.0	<1.0
1,1,1-Trichloroethane	ug/L	<1.0	<1.0	<1.0	<1.0	<1.0	<1.0	<1.0	<1.0	<1	<1	<1.0	<1.0	<1.0	<1.0
1,1,2-Trichloroethane	ug/L	<1.0	<1.0	<1.0	<1.0	<1.0	<1.0	<1.0	<1.0	<1	<1	<1.0	<1.0	<1.0	<1.0

Table 2
Summary of Groundwater Analytical Results - MWD Property
Holland, Michigan

Sample Location		MW-MWD-1	MW-MWD-1	MW-MWD-1	MW-MWD-1	MW-MWD-1	MW-MWD-1	MW-MWD-1	MW-MWD-1	MW-MWD-1	MW-MWD-1	MW-MWD-1	MW-MWD-1	MW-MWD-1	MW-MWD-1
Lab Sample ID		0311347-02	0401242-06	0405205-08	0407439-18	0410438-07	0503423-02	0506565-01	0512430-01	0609569-01	0709267-04	0809275-02	0904029-08	1002267-08	1106436-4
Sampled By		Horizon	Horizon	Horizon	Horizon	Horizon	Horizon	Horizon	Horizon	Horizon	Horizon	Horizon	Horizon	Horizon	Horizon
Analyzed By		e-Lab	e-Lab	e-Lab	e-Lab	e-Lab.	e-Lab.	e-Lab.	e-Lab.	e-Lab.	e-Lab	ALS	ALS	ALS	ALS
Sample Date		11/25/2003	1/22/2004	5/12/2004	7/29/2004	10/21/2004	3/24/2005	6/28/2005	12/21/2005	9/28/2006	9/13/2007	9/10/2008	4/1/2009	2/15/2010	6/15/2011
Sample Depth (Ft.)															
Volatiles Cont.	*Units*														
Trichloroethylene	ug/L	<1.0	<1.0	<1.0	<1.0	<1.0	<1.0	<1.0	<1.0	<1	<1	<1.0	<1.0	<1.0	<1.0
Vinyl chloride	ug/L	<1.0	<1.0	<1.0	<1.0	<1.0	<1.0	<1.0	<1.0	<1	<1	<1.0	<1.0	<1.0	<1.0
Xylene, o	ug/L	<2.0	<2.0	<2.0	<2.0	<2.0	<1.0	<1.0	<1.0	<1	<2.0	<1.0	<2.0	<2.0	<2.0
Xylene, p&m	ug/L	<1.0	<1.0	<1.0	<1.0	<1.0	<1.0	<1.0	<1.0	<1	<1	<1.0	<1.0	<1.0	<1.0
Xylene (Total)	ug/L	<3.0	<3.0	<3.0	<3.0	<3.0	<3.0	<3.0	<3.0	<3	<3	<1.0	<3.0	<3.0	<2.0

Table 2
Summary of Groundwater Analytical Results - MWD Property
Holland, Michigan

Sample Location		MW-MWD-2	MW-MWD-2	MW-MWD-2	MW-MWD-2	MW-MWD-2	MW-MWD-2	MW-MWD-2	MW-MWD-2	MW-MWD-2	MW-MWD-2	MW-MWD-2	MW-MWD-2	MW-MWD-2	MW-MWD-2
Lab Sample ID		0311347-01	0401242-07	0405205-07	0407439-17	0410438-08	0503423-03	0506565-02	0512430-02	0609569-01	0709267-05	0809275-01	0904029-07	1002267-07	1106436-5
Sampled By		Horizon	Horizon	Horizon	Horizon	Horizon	Horizon	Horizon	Horizon	Horizon	Horizon	Horizon	Horizon	Horizon	Horizon
Analyzed By		e-Lab	e-Lab	e-Lab	e-Lab	e-Lab.	e-Lab.	e-Lab.	e-Lab.	e-Lab.	e-Lab	ALS	ALS	ALS	ALS
Sample Date		11/25/2003	1/22/2004	5/12/2004	7/29/2004	10/21/2004	3/24/2005	6/28/2005	12/21/2005	9/28/2006	9/13/2007	9/10/2008	4/1/2009	2/15/2010	6/15/2011
Sample Depth (Ft.)															
Inorganics	*Units*														
Arsenic {B} Total	mg/L	**0.0018**	---	<0.010	---	---	---	---	---	---	---	---	---	---	---
Barium Total	mg/L	---	---	**0.080**	---	---	---	---	---	---	---	---	---	---	---
Chromium, Total	mg/L	<0.005	---	<0.0050	---	---	---	---	---	---	---	---	---	---	---
Copper {B} Total	mg/L	<0.025	---	<0.020	---	---	---	---	---	---	---	---	---	---	---
Mercury, Total {B,Z}	mg/L	<0.0002	---	<0.00020	---	---	---	---	---	---	---	---	---	---	---
Selenium {B} Total	mg/L	<0.005	---	<0.0020	---	---	---	---	---	---	---	---	---	---	---
Silver {B} Total	mg/L	<0.0005	---	<0.00050	---	---	---	---	---	---	---	---	---	---	---
Zinc {B} Total	mg/L	---	---	<0.010	---	---	---	---	---	---	---	---	---	---	---
Misc.	*Units*														
Biochemical Oxygen Demand	mg/L	---	---	**2.8**	---	---	---	---	---	---	---	---	---	---	---
Carbonaceous Biochemical Oxygen Demand	mg/L	---	---	<2.0	---	---	---	---	---	---	---	---	---	---	---
Chemical Oxygen Demand	mg/L	---	---	**42**	---	---	---	---	---	---	---	---	---	---	---
Nitrogen, Ammonia (total)	mg/L	---	---	**1.0**	---	---	---	---	---	---	---	---	---	---	---
Nitrogen, Ammonia, unionized	mg/L	---	---	**0.07**	---	---	---	---	---	---	---	---	---	---	---
Nitrogen, Nitrate, total{B,N}	mg/L	---	---	---	<0.10	---	---	---	---	---	---	---	---	---	---
PCB's	*Units*														
Aroclor 1016	ug/L	<0.20	---	---	---	---	---	---	---	---	---	---	---	---	---
Aroclor 1221	ug/L	<0.20	---	---	---	---	---	---	---	---	---	---	---	---	---
Aroclor 1232	ug/L	<0.40	---	---	---	---	---	---	---	---	---	---	---	---	---
Aroclor 1242	ug/L	<0.20	---	---	---	---	---	---	---	---	---	---	---	---	---
Aroclor 1248	ug/L	<0.20	---	---	---	---	---	---	---	---	---	---	---	---	---
Aroclor 1254	ug/L	<0.20	---	---	---	---	---	---	---	---	---	---	---	---	---
Aroclor 1260	ug/L	<0.20	---	---	---	---	---	---	---	---	---	---	---	---	---
Semi-Volatiles	*Units*														
Acenaphthene	ug/L	<5.0	<5.0	<5.0	<5.0	<5.0	<5.0	<5.4	<5.0	<5	<5	<5	<5.0	<5.0	<5.0
Acenaphthylene	ug/L	<5.0	<5.0	<5.0	<5.0	<5.0	<5.0	<5.4	<5.0	<5	<5	<5	<5.0	<5.0	<5.0
Aniline {I}	ug/L	<20	<20	<20	<20	<20	<4.0	<4.3	<4.0	<4	<4	<4	<4.0	<4.0	<20
Anthracene	ug/L	<5.0	<5.0	<5.0	<5.0	<5.0	<5.0	<5.4	<5.0	<5	<5	<5	<5.0	<5.0	<5.0
Benzo(a)anthracene {Q}	ug/L	<5.0	<1.0	<5.0	<1.0	<1.0	<1.0	<1.1	<1.0	<1	<1	<1	<1.0	<1.0	<1.0
Benzo(a)pyrene {Q}	ug/L	<5.0	<2.0	<5.0	<2.0	<2.0	<1.0	<1.1	<1.0	<1	<1	<1	<1.0	<1.0	<2.0
Benzo(b)fluoranthene {Q}	ug/L	<5.0	<2.0	<5.0	<2.0	<2.0	<1.0	<1.1	<1.0	<1	<1	<1	<1.0	<1.0	<2.0
Benzo(g,h,i)perylene	ug/L	<5.0	<5.0	<5.0	<5.0	<5.0	<1.0	<1.1	<1.0	<1	<1	<1	<1.0	<1.0	<5.0
Benzo(k)fluoranthene {Q}	ug/L	<5.0	<5.0	<5.0	<5.0	<5.0	<1.0	<1.1	<1.0	<1	<1	<1	<1.0	<1.0	<5.0
Benzophenone	ug/L	<30	<50	<50	<50	<50	<50	<54	<50	<50	<50	<50	<50	<50	<50
bis(2-Chloroethoxy)methane	ug/L	<5.0	<5.0	<5.0	<5.0	<5.0	<5.0	<5.4	<5.0	<5	<5	<5	<5.0	<5.0	<5.0
bis(2-Chloroethyl)ether {I}	ug/L	<5.0	<1.0	<5.0	<1.0	<1.0	<1.0	<1.1	<1.0	<1	<1	<1	<1.0	<1.0	<5.0
bis(2-Chloroisopropyl)ether	ug/L	<5.0	<5.0	<5.0	<5.0	<5.0	<5.0	<5.4	<5.0	<5	<5	<5	<5.0	<5.0	<5.0
bis(2-Ethylhexyl)phthalate	ug/L	<5.0	<5.0	<5.0	<5.0	<5.0	<5.0	<5.4	<5.0	<5	<5	<5	<5.0	<5.0	<5.0
4-Bromo diphenyl ether	ug/L	<5.0	<5.0	<5.0	<5.0	<5.0	<5.0	<5.4	<5.0	<5	<5	<5	<5.0	<5.0	<5.0
Butyl benzyl phthalate	ug/L	<5.0	<5.0	<5.0	<5.0	<5.0	<5.0	<5.4	<5.0	<5	<5	<5	<5.0	<5.0	<5.0
Carbazole	ug/L	<10	<10	<10	<10	<10	<10	<11	<10	<10	<10	<10	<10	<10	<10
4-Chloroaniline	ug/L	<20	<20	<20	<20	<20	<10	<11	<10	<10	<10	<10	<10	<10	<20

Table 2
Summary of Groundwater Analytical Results - MWD Property
Holland, Michigan

Sample Location		MW-MWD-2	MW-MWD-2	MW-MWD-2	MW-MWD-2	MW-MWD-2	MW-MWD-2	MW-MWD-2	MW-MWD-2	MW-MWD-2	MW-MWD-2	MW-MWD-2	MW-MWD-2	MW-MWD-2	MW-MWD-2
Lab Sample ID		0311347-01	0401242-07	0405205-07	0407439-17	0410438-08	0503423-03	0506565-02	0512430-02	0609569-01	0709267-05	0809275-01	0904029-07	1002267-07	1106436-5
Sampled By		Horizon	Horizon	Horizon	Horizon	Horizon	Horizon	Horizon	Horizon	Horizon	Horizon	Horizon	Horizon	Horizon	Horizon
Analyzed By		e-Lab	e-Lab	e-Lab	e-Lab	e-Lab.	e-Lab.	e-Lab.	e-Lab.	e-Lab.	e-Lab	ALS	ALS	ALS	ALS
Sample Date		11/25/2003	1/22/2004	5/12/2004	7/29/2004	10/21/2004	3/24/2005	6/28/2005	12/21/2005	9/28/2006	9/13/2007	9/10/2008	4/1/2009	2/15/2010	6/15/2011
Sample Depth (Ft.)															
Semi-Volatiles Cont.	*Units*														
4-Chloro-3-methylphenol	ug/L	<5.0	<5.0	<5.0	<5.0	<5.0	<5.0	<5.4	<5.0	<5	<5	<5	<5.0	<5.0	<5.0
beta-Chloronaphthalene	ug/L	<5.0	<5.0	<5.0	<5.0	<5.0	<5.0	<5.4	<5.0	<5	<5	<5	<5.0	<5.0	<5.0
2-Chlorophenol	ug/L	<5.0	<5.0	<5.0	<5.0	<5.0	<10	<11	<10	<10	<10	<10	<5.0	<5.0	<5.0
4-Chloro diphenyl ether	ug/L	<5.0	<5.0	<5.0	<5.0	<5.0	<5.0	<5.4	<5.0	<5	<5	<5	<5.0	<5.0	<5.0
Chrysene {Q}	ug/L	<5.0	<5.0	<5.0	<5.0	<5.0	<1.0	<1.1	<1.0	<1	<1	<1	<1.0	<1.0	<5.0
Dibenzo(a,h)anthracene {Q}	ug/L	<5.0	<2.0	<5.0	<2.0	<2.0	<2.0	<2.2	<2.0	<2	<2	<2	<2.0	<2.0	<5.0
Dibenzofuran	ug/L	<5.0	<5.0	<5.0	<5.0	<5.0	<4.0	<4.3	<4.0	<4	<4	<4	<4.0	<4.0	<5.0
1,2-Dichlorobenzene	ug/L	<5.0	<5.0	<5.0	<5.0	<5.0	<1.0	<1.1	<1.0	<1	<1	<1	<1.0	<1.0	<1.0
1,3-Dichlorobenzene	ug/L	<5.0	<5.0	<5.0	<5.0	<5.0	<1.0	<1.1	<1.0	<1	<1	<1	<1.0	<1.0	<1.0
1,4-Dichlorobenzene	ug/L	<5.0	<5.0	<5.0	<5.0	<5.0	<1.0	<1.1	<1.0	<1	<1	<1	<1.0	<1.0	<1.0
3,3'-Dichlorobenzidine	ug/L	<20	<20	<20	<20	<20	<0.39	<0.42	<0.39	<0.39	<0.39	<0.39	<0.39	<0.39	<0.30
2,4-Dichlorophenol	ug/L	<10	<10	<10	<10	<10	<10	<11	<10	<10	<10	<10	<10	<10	<10
Diethyl phthalate	ug/L	<20	<20	<20	<20	<20	<5.0	<5.4	<5.0	<5	<5	<5	<5.0	<5.0	<5.0
Dimethyl phthalate	ug/L	<20	<20	<20	<20	<20	<5.0	<5.4	<5.0	<5	<5	<5	<5.0	<5.0	<5.0
2,4-Dimethylphenol	ug/L	<5.0	<5.0	<5.0	<5.0	<5.0	<5.0	<5.4	<5.0	<5	<5	<5	<5.0	<5.0	<5.0
Di-n-butyl phthalate	ug/L	<5.0	<5.0	<5.0	<5.0	<5.0	<5.0	<5.4	<5.0	<5	<5	<5	<5.0	<5.0	<5.0
2,4-Dinitrophenol	ug/L	<20	<20	<20	<20	<20	<25	<27	<25	<25	<25	<25	<20	<20	<20
2,4-Dinitrotoluene	ug/L	<5.0	<5.0	<5.0	<5.0	<5.0	<5.0	<5.4	<5.0	<5	<5	<5	<5.0	<5.0	<5.0
2,6-Dinitrotoluene	ug/L	<5.0	<5.0	<5.0	<5.0	<5.0	<5.0	<5.4	<5.0	<5	<5	<5	<5.0	<5.0	<5.0
Di-n-octyl phthalate	ug/L	<5.0	<5.0	<5.0	<5.0	<5.0	<5.0	<5.4	<5.0	<5	<5	<5	<5.0	<5.0	<5.0
5,5-Diphenylhydantoin	ug/L	**99**	**73**	**37**	**36**	<30	**42**	<33	**49**	<30	<30	<30	<30	<30	**19**
Fluoranthene	ug/L	<5.0	<5.0	<5.0	<5.0	<5.0	<1.0	<1.1	<1.0	<1	<1	<1	<1.0	<1.0	<5.0
Fluorene	ug/L	<5.0	<5.0	<5.0	<5.0	<5.0	<5.0	<5.4	<5.0	<5	<5	<5	<5.0	<5.0	<5.0
Hexachlorobenzene (C-66)	ug/L	<5.0	<5.0	<5.0	<5.0	<5.0	<0.20	<0.22	<0.20	<0.2	<0.2	<0.2	<0.20	<0.20	<5.0
Hexachlorobutadiene (C-46)	ug/L	<5.0	<5.0	<5.0	<5.0	<5.0	<0.20	<0.22	<0.20	<0.3	<0.3	<0.3	<0.30	<0.30	<5.0
Hexachlorocyclopentadiene (C-56)	ug/L	<5.0	<5.0	<5.0	<5.0	<5.0	<5.0	<5.4	<5.0	<5	<5	<5	<5.0	<5.0	<5.0
Hexachloroethane	ug/L	<5.0	<5.0	<5.0	<5.0	<5.0	<5.0	<5.4	<5.0	<5	<5	<5	<5.0	<5.0	<5.0
Indeno(1,2,3-cd)pyrene {Q}	ug/L	<5.0	<2.0	<5.0	<2.0	<2.0	<2.0	<2.2	<2.0	<2	<2	<2	<2.0	<2.0	<2.0
Isophorone	ug/L	<5.0	<5.0	<5.0	<5.0	<5.0	<5.0	<5.4	<5.0	<5	<5	<5	<5.0	<5.0	<5.0
2-Methyl-4,6-dinitrophenol	ug/L	<20	<20	<20	<20	<20	<20	<22	<5.0	<20	<20	<20	<20	<20	<20
2-Methylnaphthalene	ug/L	<5.0	<5.0	<5.0	<5.0	<5.0	<5.0	<5.4	<5.0	<5	<5	<5	<5.0	<5.0	<5.0
2-Methylphenol {J}	ug/L	<5.0	<5.0	<5.0	<5.0	<5.0	<10	<11	<10	<10	<10	<10	<5.0	<5.0	<5.0
3-Methylphenol {J}	ug/L	---	---	---	---	---	---	---	---	---	---	---	---	---	---
4-Methylphenol {J}	ug/L	<5.0	<5.0	<5.0	<5.0	<5.0	<10	<11	<10	<10	<10	<10	<5.0	<5.0	<5.0
Naphthalene	ug/L	<5.0	<5.0	<5.0	<5.0	<5.0	<5.0	<5.4	<5.0	<5	<5	<5	<5.0	<5.0	<5.0
2-Nitroaniline	ug/L	<20	<20	<20	<20	<20	<25	<27	<25	<25	<25	<25	<20	<20	<20
3-Nitroaniline	ug/L	<20	<20	<20	<20	<20	<25	<27	<25	<25	<25	<25	<20	<20	<20
4-Nitroaniline	ug/L	<20	<20	<20	<20	<20	<25	<27	<25	<25	<25	<25	<20	<20	<20
Nitrobenzene {I}	ug/L	<5.0	<2.0	<5.0	<2.0	<2.0	<3.0	<3.3	<3.0	<3	<3	<3	<2.0	<2.0	<5.0
2-Nitrophenol	ug/L	<5.0	<5.0	<5.0	<5.0	<5.0	<5.0	<5.4	<5.0	<5	<5	<5	<5.0	<5.0	<5.0
4-Nitrophenol	ug/L	<20	<20	<20	<20	<20	<25	<27	<25	<25	<25	<25	<20	<20	<20
n-Nitroso-di-n-propylamine	ug/L	<5.0	<5.0	<5.0	<5.0	<5.0	<5.0	<5.4	<5.0	<5	<5	<5	<5.0	<5.0	<5.0

Table 2
Summary of Groundwater Analytical Results - MWD Property
Holland, Michigan

Sample Location		MW-MWD-2	MW-MWD-2	MW-MWD-2	MW-MWD-2	MW-MWD-2	MW-MWD-2	MW-MWD-2	MW-MWD-2	MW-MWD-2	MW-MWD-2	MW-MWD-2	MW-MWD-2	MW-MWD-2	MW-MWD-2
Lab Sample ID		0311347-01	0401242-07	0405205-07	0407439-17	0410438-08	0503423-03	0506565-02	0512430-02	0609569-01	0709267-05	0809275-01	0904029-07	1002267-07	1106436-5
Sampled By		Horizon	Horizon	Horizon	Horizon	Horizon	Horizon	Horizon	Horizon	Horizon	Horizon	Horizon	Horizon	Horizon	Horizon
Analyzed By		e-Lab	e-Lab	e-Lab	e-Lab	e-Lab.	e-Lab.	e-Lab.	e-Lab.	e-Lab.	e-Lab	ALS	ALS	ALS	ALS
Sample Date		11/25/2003	1/22/2004	5/12/2004	7/29/2004	10/21/2004	3/24/2005	6/28/2005	12/21/2005	9/28/2006	9/13/2007	9/10/2008	4/1/2009	2/15/2010	6/15/2011
Sample Depth (Ft.)															
Semi-Volatiles Cont.	*Units*														
N-Nitrosodiphenylamine	ug/L	<5.0	<5.0	<5.0	<5.0	<5.0	<5.0	<5.4	<5.0	<5	<5	<5	<5.0	<5.0	<5.0
Pentachlorophenol	ug/L	<20	<20	<20	<20	<20	<2.0	<2.2	<2.0	<2	<2	<2	<2.0	<2.0	<20
Phenanthrene	ug/L	<5.0	<5.0	<5.0	<5.0	<5.0	<2.0	<2.2	<2.0	<2	<2	<2	<2.0	<2.0	<5.0
Phenol	ug/L	<5.0	**64**	<5.0	<5.0	<5.0	<5.0	<5.4	**5.2**	<5	<5	<5	<5.0	<5.0	<5.0
Pyrene	ug/L	<5.0	<5.0	<5.0	<5.0	<5.0	<5.0	<5.4	<5.0	<5	<5	<5	<5.0	<5.0	<5.0
1,2,4-Trichlorobenzene	ug/L	<5.0	<5.0	<5.0	<5.0	<5.0	<5.0	<5.4	<5.0	<5	<5	<5	<5.0	<5.0	<5.0
2,4,5-Trichlorophenol	ug/L	<5.0	<5.0	<5.0	<5.0	<5.0	<5.0	<5.4	<5.0	<5	<5	<5	<5.0	<5.0	<5.0
2,4,6-Trichlorophenol	ug/L	<5.0	<4.0	<5.0	<4.0	<4.0	<4.0	<4.3	<4.0	<4	<4	<4	<4.0	<4.0	<4.0
Volatiles	*Units*														
Acetone {I}	ug/L	<25	<25	<20	<25	<25	<50	<50	<50	<50	<50	<50	<25	<25	<20
Benzene {I}	ug/L	<1.0	<1.0	**2.1**	<1.0	<1.0	<1.0	<1.0	<1.0	<1	<1	<1.0	<1.0	<1.0	<1.0
Bromodichloromethane	ug/L	<1.0	<1.0	<1.0	<1.0	<1.0	<1.0	<1.0	<1.0	<1	<1	<1.0	<1.0	<1.0	<1.0
Bromoform	ug/L	<1.0	<1.0	<1.0	<1.0	<1.0	<1.0	<1.0	<1.0	<1	<1	<1.0	<1.0	<1.0	<1.0
Bromomethane	ug/L	<1.0	<1.0	<1.0	<1.0	<1.0	<5.0	<5.0	<5.0	<5	<5	<5.0	<1.0	<1.0	<1.0
2-Butanone (MEK) {I}	ug/L	<5.0	<5.0	<5.0	<5.0	<5.0	<25	<25	<25	<25	<25	<25	<25	<25	<5.0
Carbon disulfide {I,R}	ug/L	<2.5	<2.5	<2.5	<2.5	<2.5	<5.0	<5.0	<5.0	<5	<5	<5.0	<5.0	<5.0	<2.5
Carbon tetrachloride	ug/L	<1.0	<1.0	<1.0	<1.0	<1.0	<1.0	<1.0	<1.0	<1	<1	<1.0	<1.0	<1.0	<1.0
Chlorobenzene {I}	ug/L	**15**	**15**	**17**	**19**	**8.3**	**3.3**	**1.9**	**2.8**	**2.7**	**1.9**	**1.8**	**2.1**	<1.0	<1.0
Chloroethane {I}	ug/L	<1.0	<1.0	<1.0	<1.0	<1.0	<5.0	<5.0	<5.0	<5	<5	<5.0	<1.0	<1.0	<1.0
Chloroform	ug/L	<1.0	<1.0	<1.0	<1.0	<1.0	<1.0	<1.0	<1.0	<1	<1	<1.0	<1.0	<1.0	<1.0
Chloromethane {I}	ug/L	<1.0	<1.0	<1.0	<1.0	<1.0	<5.0	<5.0	<5.0	<5	<5	<5.0	<1.0	<1.0	<1.0
Dibromochloromethane	ug/L	<1.0	<1.0	<1.0	<1.0	<1.0	<5.0	<5.0	<5.0	<5	<5	<5.0	<1.0	<1.0	<1.0
1,1-Dichloroethane {I}	ug/L	<1.0	<1.0	<1.0	<1.0	<1.0	<1.0	<1.0	<1.0	<1	<1	<1.0	<1.0	<1.0	<1.0
1,2-Dichloroethane {I}	ug/L	<1.0	<1.0	<1.0	<1.0	<1.0	<1.0	<1.0	<1.0	<1	<1	<1.0	<1.0	<1.0	<1.0
1,1-Dichloroethylene {I}	ug/L	<1.0	<1.0	<1.0	<1.0	<1.0	<1.0	<1.0	<1.0	<1	<1	<1.0	<1.0	<1.0	<1.0
cis-1,2-Dichloroethylene {I}	ug/L	<1.0	<1.0	<1.0	<1.0	<1.0	<1.0	<1.0	<1.0	<1	<1	<1.0	<1.0	<1.0	<1.0
1,2-Dichloroethene, Total	ug/L	<2.0	<2.0	<2.0	<2.0	<2.0	<1.0	<1.0	<1.0	<1	<2.0	<1.0	<1.0	<1.0	<2.0
trans-1,2-Dichloroethylene	ug/L	<1.0	<1.0	<1.0	<1.0	<1.0	<1.0	<1.0	<1.0	<1	<1	<1.0	<1.0	<1.0	<1.0
1,2-Dichloropropane {I}	ug/L	<1.0	<1.0	<1.0	<1.0	<1.0	<1.0	<1.0	<1.0	<1	<2.0	<1.0	<1.0	<1.0	<2.0
cis-1,3-Dichloropropene {I,J}	ug/L	<1.0	<1.0	<1.0	<1.0	<1.0	<1.0	<1.0	<1.0	<1	<1	<1.0	<1.0	<1.0	<1.0
trans-1,3-Dichloropropene {I, J}	ug/L	<1.0	<1.0	<1.0	<1.0	<1.0	<1.0	<1.0	<1.0	<1	<1	<1.0	<1.0	<1.0	<1.0
total-1,3-Dichloropropene {I, J}	ug/L	<2.0	<2.0	<2.0	<2.0	<2.0	<1.0	<1.0	<1.0	<1	<2.0	<1.0	<1.0	<1.0	<2.0
Ethylbenzene {I}	ug/L	<1.0	<1.0	<1.0	<1.0	<1.0	<1.0	<1.0	<1.0	<1	<1	<1.0	<1.0	<1.0	<1.0
2-Hexanone {I}	ug/L	<50	<50	<5.0	<50	<50	<50	<50	<50	<50	<50	<50	<50	<50	<5.0
Methylene chloride	ug/L	<5.0	<5.0	<5.0	<5.0	<5.0	<5.0	<5.0	<5.0	<5	<5	<5.0	<5.0	<5.0	<5.0
4-Methyl-2-pentanone (MIBK) {I}	ug/L	<50	<50	<5.0	<50	<50	<50	<50	<50	<50	<50	<50	<50	<50	<5.0
Styrene {I}	ug/L	<1.0	<1.0	<1.0	<1.0	<1.0	<1.0	<1.0	<1.0	<1	<1	<1.0	<1.0	<1.0	<1.0
1,1,2,2-Tetrachloroethane	ug/L	<1.0	<1.0	<1.0	<1.0	<1.0	<1.0	<1.0	<1.0	<1	<1	<1.0	<1.0	<1.0	<1.0
Tetrachloroethylene	ug/L	<1.0	<1.0	<1.0	<1.0	<1.0	<1.0	<1.0	<1.0	<1	<2.0	<1.0	<1.0	<1.0	<2.0
Toluene {I}	ug/L	<1.0	**1.1**	<1.0	<1.0	<1.0	<1.0	<1.0	<1.0	<1	<1	<1.0	<1.0	<1.0	<1.0
1,1,1-Trichloroethane	ug/L	<1.0	<1.0	<1.0	<1.0	<1.0	<1.0	<1.0	<1.0	<1	<1	<1.0	<1.0	<1.0	<1.0
1,1,2-Trichloroethane	ug/L	<1.0	<1.0	<1.0	<1.0	<1.0	<1.0	<1.0	<1.0	<1	<1	<1.0	<1.0	<1.0	<1.0

Table 2
Summary of Groundwater Analytical Results - MWD Property
Holland, Michigan

Sample Location		MW-MWD-2	MW-MWD-2	MW-MWD-2	MW-MWD-2	MW-MWD-2	MW-MWD-2	MW-MWD-2	MW-MWD-2	MW-MWD-2	MW-MWD-2	MW-MWD-2	MW-MWD-2	MW-MWD-2	MW-MWD-2
Lab Sample ID		0311347-01	0401242-07	0405205-07	0407439-17	0410438-08	0503423-03	0506565-02	0512430-02	0609569-01	0709267-05	0809275-01	0904029-07	1002267-07	1106436-5
Sampled By		Horizon	Horizon	Horizon	Horizon	Horizon	Horizon	Horizon	Horizon	Horizon	Horizon	Horizon	Horizon	Horizon	Horizon
Analyzed By		e-Lab	e-Lab	e-Lab	e-Lab	e-Lab.	e-Lab.	e-Lab.	e-Lab.	e-Lab.	e-Lab	ALS	ALS	ALS	ALS
Sample Date		11/25/2003	1/22/2004	5/12/2004	7/29/2004	10/21/2004	3/24/2005	6/28/2005	12/21/2005	9/28/2006	9/13/2007	9/10/2008	4/1/2009	2/15/2010	6/15/2011
Sample Depth (Ft.)															
Volatiles Cont.	*Units*														
Trichloroethylene	ug/L	<1.0	<1.0	<1.0	<1.0	<1.0	<1.0	<1.0	<1.0	<1	<1	<1.0	<1.0	<1.0	<1.0
Vinyl chloride	ug/L	<1.0	<1.0	<1.0	<1.0	<1.0	<1.0	<1.0	<1.0	<1	<1	<1.0	<1.0	<1.0	<1.0
Xylene, o	ug/L	<2.0	<2.0	<2.0	<2.0	<2.0	<1.0	<1.0	<1.0	<1	<2.0	<1.0	<2.0	<2.0	<2.0
Xylene, p&m	ug/L	<1.0	<1.0	<1.0	<1.0	<1.0	<1.0	<1.0	<1.0	<1	<1	<1.0	<1.0	<1.0	<1.0
Xylene (Total)	ug/L	<3.0	<3.0	<3.0	<3.0	<3.0	<3.0	<3.0	<3.0	<3	<3	<1.0	<3.0	<3.0	<2.0

Table 2
Summary of Groundwater Analytical Results - MWD Property
Holland, Michigan

Footnotes

Criteria from Part 201 RRD Memo, September 28, 2012
» Target Method Detection Limit from MDEQ-ERD Operational Memorandum #2, October 22, 2004

Results Qualifiers:
--- Parameter not analyzed
ND - Parameter not detected
Bolded value denotes parameter detected above detection limit
Shaded values exceed TMDL and Groundwater Surface Water Interface Criteria
Boxes exceed TMDL and Final Acute Value Criteria
Underlined values exceed TMDL and Non-Residential Drinking Water Criteria

Criteria Qualifiers:
{A} Criterion is MI Drinking Water Standard
{B} Background, may be substitued if higher than cleanup criterion
{D} Calculated criterion exceeds 100% hence is reduced to 100% or 1.0E+9 ppb
{E} Criterion is the aesthetic DW value
{G} Criterion is dependant upon pH and/or hardness value of the receiving source water.
{I} Hazardous substance may exhibit the characteristic of ignitability
{M} Calculated criterion is below the analytical TDL
{N} The concentrations of all potential sources of nitrate-nitrogen in groundwater used as a source of drinking water must not, when added together, exceed the nitrate DWC of 10,000 ug/L.
{Q} Criteria for carcinogenic PAHs were developed using RPPs to benzo(a)pyrene
{R} Hazardous substance may exhibit the characteristic of reactivity
{S} Criterion defaults to the chemical-specfic water solubility limit
{W} Concentrations of trihalomethanes in GW must be added together to determine compliance with the MI DW standard of 100 ug/L
{X} GSI shown is not protective for surface water that is used as a drinking water source
{AA} Comparison to these criteria may take into account an evaluation of whether the substances are absorbed to particulates rather than dissolved in water
{CC} GSI criteria for unionized ammonia are 29 ug/L and 53 ug/L for coldwater and warmwater streams, respectively
ID = Inadequate data to develop criterion
NA = Criterion or value is not available, or not applicable
NLV = Hazardous substance is not likely to volatilize under most conditions
Calc. = Criterion is dependant upon pH and/or hardness value of the receiving source water.

Recommended Health, Safety and Residual Management Precautions

for

Excavation and Subsurface Construction Work

at

Howard B. Dunton Park
Holland Charter Township
Ottawa County, Michigan

Prepared for:

Holland Charter Township
353 N. 120th Avenue
P.O. Box 8127
Holland, Michigan 49422

Prepared by:

Horizon Environmental
4771 – 50th Street, SE, Suite One
Grand Rapids, Michigan 49512

June 2014

HORIZON ENVIRONMENTAL

TABLE OF CONTENTS

PAGE

QUICK REFERENCE

INTRODUCTION 1

ENVIRONMENTAL CONDITIONS 1

HEALTH & SAFETY PRECAUTIONS FOR CONTRACTORS 1
- Worker Training 2
- Personal Protective Equipment 2
- Air Monitoring and Calibration 2
- Decontamination 3

SOIL AND GROUNDWATER MANAGEMENT 3
- General Requirements 3
  - Sedimentation/Erosion Control 3
  - Vehicle Track Out 3
  - Dust Control 3
- Soil Excavation and Stockpiling 3
- Soil Management and Disposal Options 4
  - Returning Soil Excavation 4
  - Off-Site Disposal 4
- Water Management and Disposal Options 4

DOCUMENTATION 5

CONTACT INFORMATION 5

FIGURES

1 Map Showing Precaution Area
2 Sample Location Map

TABLES

1 Summary of Soil Analytical Results
2 Summary of Groundwater Analytical Results

QUICK REFERENCE

Excavation/Subsurface Construction Precautions

Howard B. Dunton Park

PRECAUTIONS APPLY to work 3' or more below ground surface (bgs) in precaution area (see map).

HEALTH & SAFETY:

- Use HAZWOPER-trained workers.
- Use Level D PPE.
- Monitor air and stop work if readings are >1 ppm VOCs, >10% LEL, <19.5% or >23% oxygen.
- Decontaminate daily.
- In case of emergency, call 911.

SOIL EXCAVATION / REMOVAL:

- DO NOT relocate potentially impacted soil to other areas of the property.

TEMPORARY

- Segregate 0-3' unimpacted soil from >3' bgs potentially impacted soil.
- Minimize dust, runoff, and vehicle track out from work area.
- Return potentially impacted soil to >3' bgs and unimpacted soil to 0-3' bgs.
- Protect stockpiles from wind and water erosion.

PERMANENT

- Contact Pfizer at least 45 days prior to work (if possible) for off-site disposal guidance.
- Segregate 0-3' unimpacted soil from >3' bgs potentially impacted soil.
- Stockpile 0-3' unimpacted soil for on-site re-use. Load >3' bgs potentially impacted soil into trucks/boxes.
- Minimize dust and vehicle track-out.

WATER MANAGEMENT:

- DO NOT discharge to the ground outside of work area or to surface water.
- Contact Pfizer at least 45 days prior to work (if possible) for possible off-site disposal guidance.
- Minimize amount of water collected.
- Pump into temporary poly or "frac" tank, if necessary.
- Return water to excavation after work completed, if possible.

PFIZER CONTACT:

Tom Donohue
Pfizer Global Engineering
Phone: 908-901-7395
Email: thomas.donohue@pfizer.com

INTRODUCTION

The purpose of this document is to provide guidance related to environmental conditions on a portion of Howard B. Dunton Park in Holland, Michigan. This document summarizes available information regarding subsurface environmental conditions on the property and provides recommendations for the protection of workers and the proper management of soil and ground water generated during future excavation and subsurface construction work.

A copy of this document should be provided to contractors conducting excavation and subsurface work at depths below 582 feet mean sea level (i.e., approximately 3 feet below the ground surface) in the precaution area shown on Figure 1. Excavation and construction activities that occur in shallow soils (<3 feet below the ground surface) are not subject to the precautions described in this document. Examples of such shallow subsurface work include, but are not limited to, general landscaping activities (e.g., lawn care, small plantings, sprinklers), pavement maintenance, grubbing, clearing, and minor grading.

ENVIRONMENTAL CONDITIONS

Hazardous substances have been detected in soil and ground water in the precaution area (Figure 1) at concentrations above cleanup criteria developed by the Michigan Department of Environmental Quality ("MDEQ") under Michigan's environmental remediation law (Part 201 of Public Act 451 of 1994, as amended). These include: a volatile organic compound (chlorobenzene), a manufactured product (phenytoin/5,5 Diphenylhydantoin), and several metals (arsenic, copper, mercury, selenium, silver). Other substances have also been detected on the property, but not above relevant criteria[1].

The detections are present at depth and unavailable for contact by routine surface users of the site. They are observed predominantly within organic clay and peat units between 6 and 10 feet below ground surface, with some isolated detections in overlying sand units 3 to 4 feet beneath the asphalt surface cover.

None of the reported detections are above applicable generic non-residential direct contact or inhalation criteria which are protective for inhalation, dermal contact, and/or incidental ingestion for long-term exposure durations (21 years). The precautions prescribed herein, therefore, are extremely conservative given the expected intermittent nature and short duration of subsurface work.

HEALTH & SAFETY PRECAUTIONS FOR CONTRACTORS

It is recommended that contractors take the precautions outlined here to protect the health and safety of their workers from environmental contaminants during excavation/construction activities at depths greater than 3 feet below the ground surface (approximately 582 feet mean sea level) in the precaution area (Figure 1). Contractors engaged in excavation/construction activities are responsible for worker health and safety and must develop their own job-specific plans using the information contained in this document as a guide only.

---

[1] Additional information about other contaminants detected in the precaution area is provided on Tables 1 and 2 and Figure 2.

WORKER TRAINING

Workers involved in excavation and subsurface activities in the precaution area (Figure 1) at depths greater than 3 feet below the ground surface (approximately 582 feet mean sea level) should have completed 24 or 40 hours of Hazardous Waste Operations and Emergency Response (HAZWOPER) training pursuant to 29 CFR 1910.120 and be current on their annual eight hour HAZWOPER refresher training.

PERSONAL PROTECTIVE EQUIPMENT

"Level D" personal protective equipment (PPE) should be used for subsurface work in the precaution area (Figure 1). Level D PPE provides minimal protection that is used for nuisance contamination only. The following constitute Level D PPE for the precaution area: coveralls (or long-sleeve shirt and pants); boots/shoes with steel toe and shank; gloves; safety glasses/goggles or face shield; and hard hat.

AIR MONITORING AND CALIBRATION

Chemical exposures through the air should be monitored through direct reading instruments including:

Monitoring Instrument	Location to be Monitored	Monitoring Frequency
Photoionization Detector (PID)	Worker breathing zone when excavation is open.	Continuous.
Multiple gas meter	If worker enters excavation, then monitor worker's breathing zone for oxygen, hydrogen sulfide, and lower explosive limit.	Continuous and alarm mode.

Although general air monitoring guidance is provided below, contractors engaged in excavation/construction must develop their own job-specific air monitoring plan.

Air monitoring should be conducted in all excavation and subsurface construction work areas unless these areas have been previously characterized as posing minimal inhalation risk. Additional air monitoring may be required if the excavation and subsurface construction work creates a confined space. Confined space entry procedures must be followed if workers enter any trench greater than 4 feet deep where a hazardous atmosphere exists or could reasonably be expected to exist. Monitoring devices should be calibrated at a frequency consistent with their manufacturers' recommendations.

For volatile compound exposures, if breathing zone PID readings of 10 ppm or higher persist above background for a sustained period of 30-60 seconds or workers experience any general exposure symptoms (e.g., headache, dizziness, tingling, itchy/watery eyes), then engineering controls should be implemented in the work zone (e.g., active ventilation) to reduce breathing zone air concentrations so they are consistently less than 10 ppm above background levels.

For the combustible gas meter, if readings indicate greater than 10% of the lower explosive limit (LEL), suspend operations and leave the area taking care not to generate flames or static sparking.

Actively ventilate the area and resume work only when readings are consistently less than 10% of the LEL.

For the oxygen meter, if readings indicate less than 19.5% oxygen, suspend operations and leave the area. If readings indicate greater than 23% oxygen, suspend operations (due to increased fire hazards), turn off or remove any equipment that may present a source of ignition, and leave the area. For both scenarios, actively ventilate the area and resume work when oxygen readings are consistently between 19.5% and 23%.

DECONTAMINATION

Disposable PPE should be removed and disposed at the end of each work day or more frequently as needed. Workers should shower and launder work clothes after each work day.

SOIL AND GROUNDWATER MANAGEMENT

This section is intended to provide an overview of procedures for the management of soil and ground water generated during excavation/construction activities in the precaution area (Figure 1).

GENERAL REQUIREMENTS

The following measures should be implemented during excavation in the precaution area (Figure 1).

Sedimentation/Erosion Control Permit

Soil relocation should be completed in accordance with Part 91 (Soil Erosion and Sedimentation Control), and all other applicable regulatory frameworks, including the requirements of Parts 31 (Floodplains), 301 (Inland Lakes and Streams) and 303 (Wetlands) of Act 451. If necessary, permits should be obtained from MDEQ, the U.S. Army Corps of Engineers, and/or Ottawa County for planned cut/fill activities.

Vehicle Track-Out

Measures should be taken to minimize the potential for vehicle track-out of soil from the precaution area (Figure 1).

Dust Control

The dust level at the site should be controlled during excavation/construction activities in the precaution area (Figure 1). Dust control techniques should be implemented, if necessary, during excavation and for as long as disrupted soil is present in the precaution area. These techniques may include the use of light water spray during dry periods to maintain the surface in a moist condition, use of dust palliatives, and limiting fall distance when moving soils.

SOIL EXCAVATION AND STOCKPILING

These excavation and stockpiling precautions apply whenever excavation will extend to depths greater than 3 feet below ground surface (nominally 582 feet MSL) in the precaution area (Figure 1).

Shallow, unimpacted soils should be segregated from deeper, potentially impacted soil. Shallow, unimpacted soil can be placed directly on the ground or hard surface (e.g., asphalt or concrete) but should be managed in a manner that prevents erosion due to wind or precipitation. Deeper, potentially impacted soils should be stockpiled separately and placed on and covered with plastic sheeting to prevent contact with precipitation, erosion and possible contaminant migration. The use of additional erosion control measures may be required.

Soils destined for off-site disposal may also be temporarily managed on-site prior to transportation off-site (while characterization and landfill disposal approval are obtained) as described above or placed directly into transportation containers (e.g., rolloff boxes). Rolloff boxes should be covered with a tarp and stockpiles covered with plastic sheeting.

SOIL MANAGEMENT AND DISPOSAL OPTIONS

Soil generated from excavations in the precaution area (Figure 1) should be managed in accordance with the procedures described below.

Returning Soil to Excavation

Soil excavated from 0 to 3 feet below ground surface (i.e., above 582 feet msl) may be returned to the excavation provided they do not exhibit any visual (staining, discoloration, etc.) or olfactory (odors) evidence of impact.

Soil generated from depths greater than 3 feet below ground surface may also be returned to the excavation provided that: (1) it does not evidence any visual/olfactory evidence of impact; (2) it is used to backfill the excavation only up to a depth of 3 feet below ground surface; and (3) it is covered with unimpacted shallow soil or clean imported fill at the completion of activities to restore the existing three feet of cover that exists across the site.

Soil that will be returned to the excavation does not require characterization. Excavated soil exhibiting any visual or olfactory evidence of impact or containing non-soil waste materials should be disposed at an off-site disposal facility as described below.

Off-Site Disposal

Any soil exhibiting visual or olfactory evidence of impact or other soil generated during excavation work in the precaution area (Figure 1) that cannot be accommodated as backfill in the excavation in accordance with the procedures above should be disposed off-site. These soils must go to a controlled site (i.e. landfill) and must be properly characterized prior to off-site disposal to assure that they are managed in accordance with applicable state and federal regulations. In the event that soils within the precaution area (Figure 1) will require off-site disposal, Pfizer should be contacted at least 45 days prior to start of work to allow for coordination of sample collection, laboratory analysis, and landfill approval.

WATER MANAGEMENT AND DISPOSAL OPTIONS

Ground water from the precaution area (Figure 1) cannot be discharged onto the ground surface or to surface water, but it can be returned to the excavation from which it was removed or managed off-site as described below.

Excavation and subsurface construction activities should be performed in a manner that reduces the volume of ground water collected and requiring management. Examples include minimizing the time that the excavation remains open and avoiding excavation during or prior to heavy rain events. Accumulated water can be removed from the excavation by pumping it into a temporary water storage tank (e.g., 1,000-gallon portable poly tank or larger "frac" tank). Water can be temporarily stored in this manner until completion of the subsurface construction activity. Accumulated water from the precaution area (Figure 1) may be: (1) discharged back into the excavation at the completion of the subsurface construction and before the excavation is filled with soil; or (2) disposed off-site.

Accumulated water to be returned to the excavation does not require characterization. In the event that accumulated water will require off-site management, Pfizer should be contacted at least 45 days prior to start of work to allow for coordination of sample collection, laboratory analysis, and disposal facility approval.

DOCUMENTATION

All documentation pertaining to the management and disposal of soil and ground water residuals from the precaution area (Figure 1) should be maintained by the property owner. This documentation should include identification of the work area, supporting characterization data/information, and relevant landfill waste profile/disposal approval or treatment/discharge approval, and quantity of soil/water disposed (landfill weigh tickets, water discharge volumes, etc.).

CONTACT INFORMATION

The following person may be contacted for technical assistance should additional information be needed regarding site conditions and/or application of these protocols.

Thomas Donohue
Pfizer Global Engineering
Phone: 908-901-7395
E-mail: thomas.donohue@pfizer.com.

PFZ01154F05

North

0 150 300 600

SCALE IN FEET

LEGEND:

- PROPERTY LINES
- APPROXIMATE AREAL EXTENT OF DETECTION IN SOIL
- SUBSURFACE PRECAUTION AREA

HORIZON ENVIRONMENTAL

PROJECT NUMBER: PFZ–01154

Howard B. Dunton Park
Holland Charter Township, Ottawa County, Michigan

MAP SHOWING PRECAUTION AREA

FIGURE: 1

JANUARY 2013

J:\Lvanprooyen\DWGS\PFZ\01154\PFZ01154F05.dwg, 6/5/2014 11:25:56 AM

PFZ01154F04

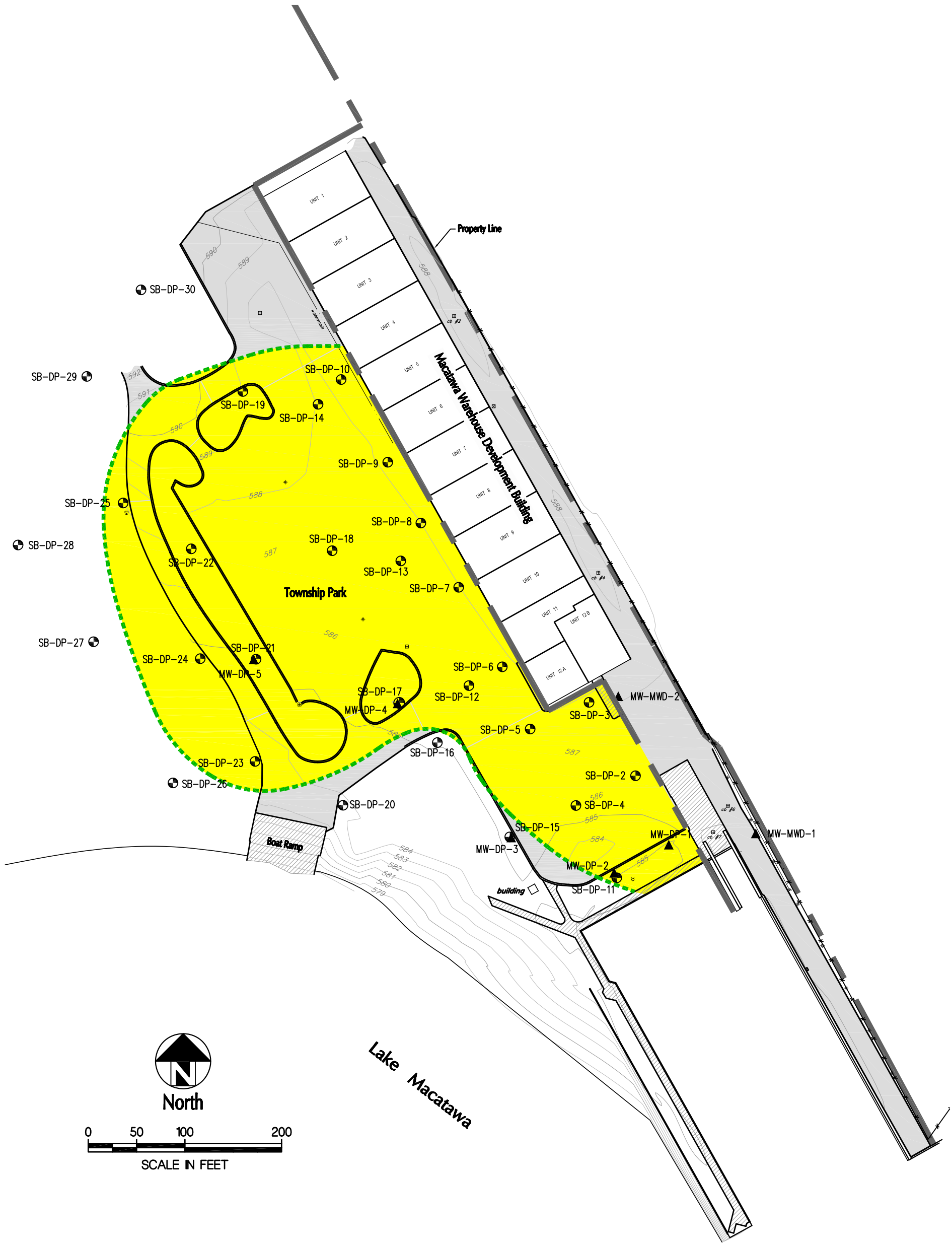

LEGEND:

- SOIL BORING
- MONITORING WELL
- CATCH BASIN
- LIGHT POLE
- PROPERTY LINES
- ASPHALT
- CONCRETE
- GRAVEL
- CHAIN LINK FENCE
- APPROXIMATE AREAL EXTENT OF DETECTION IN SOIL
- SUBSURFACE PRECAUTION AREA

HORIZON ENVIRONMENTAL

PROJECT NUMBER: PFZ-01154

Howard B. Dunton Park
Holland Charter Township, Ottawa County, Michigan

FIGURE: **2**

SAMPLE LOCATION MAP

JANUARY 2013

J:\Leanproven\DWGS\PFZ\01154\PFZ01154F04.dwg, 4/2/2014 12:14:46 PM

Table 1
Summary of Soil Analytical Results
Dunton Park Property
Holland, Michigan

Sample Location Lab Sample ID Sampled By Analyzed By Sample Date Sample Depth (ft.) Soil Type:		Background Target Method Detection Limit	Non-Residential Drinking Water Protection	Groundwater Surface Water Interface Protection	Groundwater Contact Protection	Non-Residential Soil Volatilization to Indoor Air Inhalation	Non-Residential Volatile Soil Inhalation 5-Meter (10-Acre)	Non-Residential Particulate Soil Inhalation (10-Acre)	Non-Residential Direct Contact	Soil Saturation Screening Levels	SB-DP-1 0311137-03 Horizon e-Lab 11/10/2003 0'-0.5' top soil	SB-DP-1 0311137-04 Horizon e-Lab 11/10/2003 3'-4' sand	SB-DP-1 0311137-05 Horizon e-Lab 11/10/2003 6'-7' organic clay	SB-DP-2 0311137-01 Horizon e-Lab 11/10/2003 3'-4' sand
Inorganics	Units													
Arsenic {B}	mg/Kg	5.8	4.6	4.6	2000	NLV	NLV	5.5E+2	37	NA	**0.73**	**2.8**	**1.3**	**3**
Chromium, Total	mg/Kg	18	1.0E+6 {D}	3.5E+6 {G}	1.0E+6 {D}	NLV	NLV	9.0E+4	1.0E+6 {D}	NA	**5.8**	**3.3**	**19**	**8.5**
Copper {B}	mg/Kg	32	5800	110 {G}	1000000 {D}	NLV	NLV	3.5E+4	73000	NA	**14**	---	**21**	**6.4**
Mercury (Inorganic) {B}	mg/Kg	0.13	1.7	0.05 {M} :0.0012	47	89	3.7E+1	5.3E+3	580	NA	<0.1	<0.1	**0.32**	<0.1
Selenium {B}	mg/Kg	0.41	4	0.4	78000	NLV	NLV	3.5E+4	9600	NA	<0.2	<0.2	**0.35**	<0.2
Silver {B}	mg/Kg	1	13	0.1 {M} :0.027	200000	NLV	NLV	1.7E+3	9000	NA	<0.5	<0.5	**0.96**	<0.5
Misc.	Units													
Percent Moisture	%	NA	NA	NA	NA	NA	NA	NA	NA	NA	**8.4**	**11**	**36**	**14**
PCB's	Units													
Aroclor 1016	ug/Kg	330	NLL	NLL	NLL	1.6E+7	1.7E+7	3.9E+6	16000 {T}	NA	<330	<330	<330	<330
Aroclor 1221	ug/Kg	330	NLL	NLL	NLL	1.6E+7	1.7E+7	3.9E+6	16000 {T}	NA	<330	<330	<330	<330
Aroclor 1232	ug/Kg	330	NLL	NLL	NLL	1.6E+7	1.7E+7	3.9E+6	16000 {T}	NA	<330	<330	<330	<330
Aroclor 1242	ug/Kg	330	NLL	NLL	NLL	1.6E+7	1.7E+7	3.9E+6	16000 {T}	NA	<330	<330	<330	<330
Aroclor 1248	ug/Kg	330	NLL	NLL	NLL	1.6E+7	1.7E+7	3.9E+6	16000 {T}	NA	**2100**	<330	<330	<330
Aroclor 1254	ug/Kg	330	NLL	NLL	NLL	1.6E+7	1.7E+7	3.9E+6	16000 {T}	NA	<330	<330	<330	<330
Aroclor 1260	ug/Kg	330	NLL	NLL	NLL	1.6E+7	1.7E+7	3.9E+6	16000 {T}	NA	<330	<330	<330	<330
Semi-Volatiles	Units													
Acenaphthene	ug/Kg	330	8.8E+5	8700	9.7E+5	3.5E+8	5.8E+7	3.7E+9	1.3E+8	NA	<330	<330	<330	<330
Acenaphthylene	ug/Kg	330	17000	ID	4.4E+5	3.0E+6	1.6E+6	6.0E+8	5.2E+6	NA	<330	<330	<330	<330
Aniline {I}	ug/Kg	330	4400	330 {M} :80	2.8E+6	NLV	NLV	1.7E+7	1.5E+6	4.5E+6	<1700	<1700	<1700	<1700
Anthracene	ug/Kg	330	41000	ID	41000	1.0E+9 {D}	9.6E+8	1.7E+10	7.3E+8	NA	<330	<330	<330	<330
Benzo(a)anthracene {Q}	ug/Kg	330	NLL	NLL	NLL	NLV	NLV	ID	80000	NA	<330	<330	<330	<330
Benzo(a)pyrene {Q}	ug/Kg	330	NLL	NLL	NLL	NLV	NLV	1.1E+6	8000	NA	<330	<330	<330	<330
Benzo(b)fluoranthene {Q}	ug/Kg	330	NLL	NLL	NLL	ID	ID	ID	80000	NA	<330	<330	<330	<330
Benzo(g,h,i)perylene	ug/Kg	330	NLL	NLL	NLL	NLV	NLV	2.1E+8	7.0E+6	NA	<330	<330	<330	<330
Benzo(k)fluoranthene {Q}	ug/Kg	330	NLL	NLL	NLL	NLV	NLV	ID	8.0E+5	NA	<330	<330	<330	<330
Benzophenone	ug/Kg	NA	NA	NA	NA	NA	NA	NA	NA	NA	<370	<390	<510	<390
bis(2-Chloroethoxy)methane	ug/Kg	330	NA	NA	NA	NA	NA	NA	NA	NA	<330	<330	<330	<330
bis(2-Chloroethyl)ether {I}	ug/Kg	100	170	100 {M}: 20	1.1E+5	44000	7.8E+3	7.2E+6	58000	2.2E+6	<330	<330	<330	<330
bis(2-Chloroisopropyl)ether	ug/Kg	330	NA	NA	NA	NA	NA	NA	NA	NA	<330	<330	<330	<330
bis(2-Ethylhexyl)phthalate	ug/Kg	330	NLL	NLL	NLL	NLV	NLV	5.3E+8	1.0E+7 {C}	1.0E+7	<330	<330	<330	<330
4-Bromo diphenyl ether	ug/Kg	330	NA	NA	NA	NA	NA	NA	NA	NA	<330	<330	<330	<330
Butyl benzyl phthalate	ug/Kg	330	3.1E+5 {C}	1.2E+5 {X}	3.1E+5 {C}	NLV	NLV	1.3E+10	3.1E+5 {C}	3.1E+5	<330	<330	<330	<330
Carbazole	ug/Kg	330	39000	1100	8.2E+5	NLV	NLV	4.7E+7	2.4E+6	NA	<330	<330	<330	<330
4-Chloro diphenyl ether	ug/Kg	330	NA	NA	NA	NA	NA	NA	NA	NA	<330	<330	<330	<330
4-Chloro-3-methylphenol	ug/Kg	280	16000	280	3.0E+6	NLV	NLV	ID	1.5E+7	NA	<330	<330	<330	<330
4-Chloroaniline	ug/Kg	330	NA	NA	NA	NA	NA	NA	NA	NA	<1700	<1700	<1700	<1700
beta-Chloronaphthalene	ug/Kg	330	1.8E+6	NA	2.3E+6	ID	ID	ID	1.8E+8	NA	<330	<330	<330	<330
2-Chlorophenol	ug/Kg	330	2600	360	1.9E+6	8.0E+5	6.6E+5	3.2E+8	4.5E+6	1.9E+7	<330	<330	<330	<330
Chrysene {Q}	ug/Kg	330	NLL	NLL	NLL	ID	ID	ID	8.0E+6	NA	<330	<330	<330	<330
Di-n-butyl phthalate	ug/Kg	330	7.6E+5 {C}	11000	7.6E+5 {C}	NLV	NLV	9.0E+8	7.6E+5 {C}	7.6E+5	<370	<390	<510	<390
Di-n-octyl phthalate	ug/Kg	330	1.4E+8 {C}	ID	1.4E+8 {C}	NLV	NLV	8.4E+9	2.0E+7	1.4E+8	<330	<330	<330	<330
Dibenzo(a,h)anthracene {Q}	ug/Kg	330	NLL	NLL	NLL	NLV	NLV	ID	8000	NA	<330	<330	<330	<330
Dibenzofuran	ug/Kg	330	ID	1700	ID	3.6E+6	9.6E+4	1.7E+6	ID	NA	<330	<330	<330	<330

Table 1
Summary of Soil Analytical Results
Dunton Park Property
Holland, Michigan

Sample Location Lab Sample ID Sampled By Analyzed By Sample Date Sample Depth (ft.) Soil Type:		Background Target Method Detection Limit	Non-Residential Drinking Water Protection	Groundwater Surface Water Interface Protection	Groundwater Contact Protection	Non-Residential Soil Volatilization to Indoor Air Inhalation	Non-Residential Volatile Soil Inhalation 5-Meter (10-Acre)	Non-Residential Particulate Soil Inhalation (10-Acre)	Non-Residential Direct Contact	Soil Saturation Screening Levels	SB-DP-1 0311137-03 Horizon e-Lab 11/10/2003 0'-0.5' top soil	SB-DP-1 0311137-04 Horizon e-Lab 11/10/2003 3'-4' sand	SB-DP-1 0311137-05 Horizon e-Lab 11/10/2003 6'-7' organic clay	SB-DP-2 0311137-01 Horizon e-Lab 11/10/2003 3'-4' sand
Semi-Volatiles Cont.	Units													
1,2-Dichlorobenzene	ug/Kg	100	14000	280	2.1E+5 {C}	2.1E+5 {C}	2.8E+7	2.6E+10	2.1E+5 {C}	2.1E+5	<330	<330	<330	<330
1,3-Dichlorobenzene	ug/Kg	100	480	680	51000	48000	5.6E+4	5.3E+7	1.7E+5 {C}	1.7E+5	<330	<330	<330	<330
1,4-Dichlorobenzene	ug/Kg	100	1700	360	1.4E+5	1.0E+5	1.6E+5	3.4E+8	1.9E+6	NA	<330	<330	<330	<330
3,3'-Dichlorobenzidine	ug/Kg	2000	2000 {M} :110	2000 {M} :7.4	4600	NLV	NLV	4.9E+6	30000	NA	<2000	<2000	<2000	<2000
2,4-Dichlorophenol	ug/Kg	330	4200	330 {M}: 220	9.6E+5	NLV	NLV	1.4E+9	1.8E+6 {C,DD}	1.8E+6	<330	<330	<330	<330
Diethyl phthalate	ug/Kg	330	3.2E+5	2200	7.4E+5 {C}	NLV	NLV	9.0E+8	7.4E+5 {C}	7.4E+5	<330	<330	<330	<330
Dimethyl phthalate	ug/Kg	330	7.9E+5 {C}	NA	7.9E+5 {C}	NLV	NLV	9.0E+8	7.9E+5 {C}	7.9E+5	<330	<330	<330	<330
2,4-Dimethylphenol	ug/Kg	330	20000	7600	1.0E+7	NLV	NLV	1.3E+9	3.6E+7	NA	<330	<330	<330	<330
2,4-Dinitrophenol	ug/Kg	830	NA	NA	NA	NA	NA	NA	NA	NA	<1700	<1700	<1700	<1700
2,4-Dinitrotoluene	ug/Kg	330	640	NA	1.7E+5	NLV	NLV	1.2E+7	2.2E+5	NA	<330	<330	<330	<330
2,6-Dinitrotoluene	ug/Kg	330	NA	NA	NA	NA	NA	NA	NA	NA	<330	<330	<330	<330
5,5-Diphenylhydantoin	ug/Kg	NA	3300	4300 {X}	6.8E+5	NLV	NLV	1.7E+8	4.8E+5	NA	<600	<600	**2100**	<600
Fluoranthene	ug/Kg	330	7.3E+5	5500	7.3E+5	1.0E+9 {D}	5.3E+8	2.5E+9	1.3E+8	NA	<330	<330	**570**	<330
Fluorene	ug/Kg	330	8.9E+5	5300	8.9E+5	1.0E+9 {D}	9.0E+7	2.5E+9	8.7E+7	NA	<330	<330	<330	<330
Hexachlorobenzene (C-66)	ug/Kg	330	1800	350	8200	2.2E+5	3.4E+4	5.1E+6	37000	NA	<330	<330	<330	<330
Hexachlorobutadiene (C-46)	ug/Kg	50	72000	91	3.5E+5 {C}	3.5E+5 {C}	2.8E+5	1.1E+8	3.5E+5 {C}	3.5E+5	<330	<330	<330	<330
Hexachlorocyclopentadiene (C-56)	ug/Kg	330	3.2E+5	ID	7.2E+5 {C}	56000	3.6E+4	3.5E+6	7.2E+5 {C}	7.2E+5	<330	<330	<330	<330
Hexachloroethane	ug/Kg	300	1200	1800 {X}	1.1E+5	79000	8.4E+5	6.0E+7	7.3E+5	NA	<330	<330	<330	<330
Indeno(1,2,3-cd)pyrene {Q}	ug/Kg	330	NLL	NLL	NLL	NLV	NLV	ID	80000	NA	<330	<330	<330	<330
Isophorone	ug/Kg	330	62000	26000 {X}	2.4E+6 {C}	NLV	NLV	4.9E+9	2.4E+6 {C}	2.4E+6	<330	<330	<330	<330
2-Methyl-4,6-dinitrophenol	ug/Kg	830	830 {M} :400	NA	1.9E+5	NLV	NLV	3.5E+7	2.6E+5	NA	<1700	<1700	<1700	<1700
2-Methylnaphthalene	ug/Kg	330	1.7E+5	4200	5.5E+6	4.9E+6	1.1E+6	1.7E+8	2.6E+7	NA	<330	<330	<330	<330
2-Methylphenol {J}	ug/Kg	330	20000	1000 {M}: 600	1.6E+7	NLV	NLV	1.7E+9	3.6E+7	NA	<330	<330	<330	<330
4-Methylphenol {J}	ug/Kg	330	20000	1000 {M}: 600	1.6E+7	NLV	NLV	1.7E+9	3.6E+7	NA	<330	<330	<330	<330
Naphthalene	ug/Kg	330	1.0E+5	730	2.1E+6	4.7E+5	2.1E+5	5.3E+7	5.2E+7	NA	<330	<330	<330	<330
2-Nitroaniline	ug/Kg	830	NA	NA	NA	NA	NA	NA	NA	NA	<1700	<1700	<1700	<1700
3-Nitroaniline	ug/Kg	830	NA	NA	NA	NA	NA	NA	NA	NA	<1700	<1700	<1700	<1700
4-Nitroaniline	ug/Kg	830	NA	NA	NA	NA	NA	NA	NA	NA	<1700	<1700	<1700	<1700
Nitrobenzene {I}	ug/Kg	330	330 {M} :190	3600 {X}	2.2E+5	1.7E+5	3.8E+4	1.3E+7	3.4E+5	4.9E+5	<330	<330	<330	<330
2-Nitrophenol	ug/Kg	330	1200	ID	1.6E+6	NLV	NLV	ID	2.0E+6	NA	<330	<330	<330	<330
4-Nitrophenol	ug/Kg	830	NA	NA	NA	NA	NA	NA	NA	NA	<1700	<1700	<1700	<1700
n-Nitroso-di-n-propylamine	ug/Kg	330	330 {M} :100	NA	7200	NLV	NLV	1.2E+6	5400	1.5E+6	<330	<330	<330	<330
N-Nitrosodiphenylamine	ug/Kg	330	22000	NA	7.0E+5	NLV	NLV	1.7E+9	7.8E+6	NA	<330	<330	<330	<330
Pentachlorophenol	ug/Kg	20	22	{G,X}	4300	NLV	NLV	7.8E+7	3.2E+5	NA	<800	<800	<800	<800
Phenanthrene	ug/Kg	330	1.6E+5	2100	1.1E+6	5.1E+6	1.1E+5	1.7E+6	5.2E+6	NA	<330	<330	<330	<330
Phenol	ug/Kg	330	2.6E+5	9000	1.2E+7 {C}	NLV	NLV	1.1E+10	1.2E+7 {C,DD}	1.2E+7	<330	<330	<330	<330
Pyrene	ug/Kg	330	4.8E+5	ID	4.8E+5	1.0E+9 {D}	4.7E+8	1.7E+9	8.4E+7	NA	<330	<330	<330	<330
1,2,4-Trichlorobenzene	ug/Kg	330	4200	5900 {X}	1.1E+6	1.1E+6 {C}	2.0E+7	6.6E+9	1.1E+6 {C,DD}	1.1E+6	<330	<330	<330	<330
2,4,5-Trichlorophenol	ug/Kg	330	1.1E+5	NA	9.1E+6	NLV	NLV	6.0E+9	7.3E+7	NA	<330	<330	<330	<330
2,4,6-Trichlorophenol	ug/Kg	330	9400	330 {M} 100	2.0E+5	NLV	NLV	7.8E+8	3.3E+6	NA	<330	<330	<330	<330
Volatiles	Units													
Acetone {I}	ug/Kg	1000	42000	34000	1.1E+8 {C}	1.1E+8 {C}	9.6E+7	1.0E+11	7.3E+7	1.1E+8	<650	<790	<810	<680
Benzene {I}	ug/Kg	50	100	4000 {X}	2.2E+5	8400	5.9E+4	2.8E+8	4.0E+5 {C}	4.0E+5	<58	<71	<72	<61
Bromodichloromethane	ug/Kg	100	1600 {W}	ID	2.8E+5	6400	1.9E+4	6.6E+7	4.9E+5	1.5E+6	<86	<110	<110	<91

Table 1
Summary of Soil Analytical Results
Dunton Park Property
Holland, Michigan

Sample Location Lab Sample ID Sampled By Analyzed By Sample Date Sample Depth (ft.) Soil Type:		Background Target Method Detection Limit	Non-Residential Drinking Water Protection	Groundwater Surface Water Interface Protection	Groundwater Contact Protection	Non-Residential Soil Volatilization to Indoor Air Inhalation	Non-Residential Volatile Soil Inhalation 5-Meter (10-Acre)	Non-Residential Particulate Soil Inhalation (10-Acre)	Non-Residential Direct Contact	Soil Saturation Screening Levels	SB-DP-1 0311137-03 Horizon e-Lab 11/10/2003 0'-0.5' top soil	SB-DP-1 0311137-04 Horizon e-Lab 11/10/2003 3'-4' sand	SB-DP-1 0311137-05 Horizon e-Lab 11/10/2003 6'-7' organic clay	SB-DP-2 0311137-01 Horizon e-Lab 11/10/2003 3'-4' sand
Volatiles Cont.	Units													
Bromoform	ug/Kg	100	1600 {W}	ID	8.7E+5 {C}	7.7E+5	1.9E+6	2.2E+9	8.7E+5 {C}	8.7E+5	<86	<110	<110	<91
Bromomethane	ug/Kg	200	580	700	1.4E+6	1600	3.4E+4	9.0E+7	1.0E+6	2.2E+6	<220	<260	<270	<230
2-Butanone (MEK) {I}	ug/Kg	750	7.6E+5	44000	2.7E+7 {C}	2.7E+7 {C}	2.1E+7	1.7E+10	2.7E+7 {C,DD}	2.7E+7	<220	<260	<270	<230
Carbon disulfide {I,R}	ug/Kg	250	46000	ID	2.8E+5 {C}	1.4E+5	4.8E+6	1.3E+10	2.8E+5 {C,DD}	2.8E+5	<220	<260	<270	<230
Carbon tetrachloride	ug/Kg	50	100	900 {X}	92000	990	2.0E+4	1.0E+8	3.9E+5 {C}	3.9E+5	<58	<71	<72	<61
Chlorobenzene {I}	ug/Kg	50	2000	500	2.6E+5 {C}	2.2E+5	6.6E+5	1.3E+9	2.6E+5 {C}	2.6E+5	<58	<71	<72	<61
Chloroethane {I}	ug/Kg	250	34000	22000 {X}	9.5E+5 {C}	9.5E+5 {C}	7.2E+7	1.7E+11	9.5E+5 {C}	9.5E+5	<220	<260	<270	<230
Chloroform	ug/Kg	50	1600 {W}	7000	1.5E+6 {C}	38000	2.0E+5	9.6E+8	1.5E+6 {C}	1.5E+6	<58	<71	<72	<61
Chloromethane {I}	ug/Kg	250	22000	ID	1.1E+6 {C}	10000	6.0E+5	1.6E+9	1.1E+6 {C}	1.1E+6	<220	<260	<270	<230
Dibromochloromethane	ug/Kg	100	1600 {W}	ID	3.6E+5	21000	4.8E+4	9.6E+7	5.0E+5	6.1E+5	<86	<110	<110	<91
1,1-Dichloroethane {I}	ug/Kg	50	50000	15000	8.9E+5 {C}	4.3E+5	3.6E+6	9.0E+9	8.9E+5 {C}	8.9E+5	<58	<71	<72	<61
1,2-Dichloroethane {I}	ug/Kg	50	100	7200 {X}	3.8E+5	11000	2.0E+4	9.0E+7	4.2E+5	1.2E+6	<58	<71	<72	<61
1,1-Dichloroethylene {I}	ug/Kg	50	140	2600	2.2E+5 {X}	330	9.0E+3	4.7E+7	5.7E+5 {C}	5.7E+5	<58	<71	<72	<61
cis-1,2-Dichloroethylene {I}	ug/Kg	50	1400	12000	6.4E+5 {C}	41000	2.6E+5	6.0E+8	6.4E+5 {C}	6.4E+5	<58	<71	<72	<61
trans-1,2-Dichloroethylene	ug/Kg	50	2000	30000 {X}	1.4E+6 {C}	43000	5.0E+5	1.3E+9	1.4E+6 {C}	1.4E+6	<58	<71	<72	<61
1,2-Dichloroethylene {I} Total	ug/Kg	50	1400	12000	6.4E+5 {C}	41000	2.6E+5	6.0E+8	6.4E+5 {C}	6.4E+5	<86	<110	<110	<91
1,2-Dichloropropane {I}	ug/Kg	50	100	4600 {X}	3.2E+5	7400	3.1E+4	7.2E+7	5.5E+5 {C}	5.5E+5	<58	<71	<72	<61
cis-1,3-Dichloropropene {I,J}	ug/Kg	50	700	180 {X}	1.1E+5	5400	1.2E+5	3.5E+8	2.4E+5	6.2E+5	<58	<71	<72	<61
trans-1,3-Dichloropropene {I, J}	ug/Kg	50	700	180 {X}	1.1E+5	5400	1.2E+5	3.5E+8	2.4E+5	6.2E+5	<58	<71	<72	<61
1,3-Dichloropropene Total	ug/Kg	100	700	180 {X}	1.1E+5	5400	1.2E+5	3.5E+8	2.4E+5	6.2E+5	<86	<110	<110	<91
Ethylbenzene {I}	ug/Kg	50	1500	360	1.4E+5 {C}	1.4E+5 {C}	1.9E+6	7.8E+9	1.4E+5 {C}	1.4E+5	<58	<71	<72	<61
2-Hexanone {I}	ug/Kg	2500	58000	ID	2.5E+6 {C}	1.8E+6	7.8E+5	7.2E+8	2.5E+6 {C}	2.5E+6	<220	<260	<270	<230
4-Methyl-2-pentanone (MIBK) {I}	ug/Kg	2500	1.0E+5	ID	2.7E+6 {C}	2.7E+6 {C}	3.2E+7	3.6E+10	2.7E+6 {C}	2.7E+6	<220	<260	<270	<230
Methylene chloride	ug/Kg	100	100	30000 {X}	2.3E+6 {C}	2.4E+5	1.0E+6	5.0E+9	2.3E+6 {C}	2.3E+6	<220	<260	<270	<230
Styrene {I}	ug/Kg	50	2700	2100	2.7E+5	5.2E+5 {C}	2.0E+6	4.1E+9	5.2E+5 {C}	5.2E+5	<58	<71	<72	<61
1,1,2,2-Tetrachloroethane	ug/Kg	50	700	1600 {X}	94000	23000	2.0E+4	4.1E+7	2.4E+5	8.7E+5	<86	<110	<110	<91
Tetrachloroethylene	ug/Kg	50	100	1200 {X}	88000 {C}	21000	2.9E+5	7.2E+8	88000 {C}	88000	<58	<71	<72	<61
Toluene {I}	ug/Kg	100	16000	5400	2.5E+5 {C}	2.5E+5 {C}	2.2E+7	7.2E+9	2.5E+5 {C}	2.5E+5	<58	<71	<72	<61
1,1,1-Trichloroethane	ug/Kg	50	4000	1800	4.6E+5 {C}	4.6E+5	9.0E+6	1.7E+10	4.6E+5 {C}	4.6E+5	<58	<71	<72	<61
1,1,2-Trichloroethane	ug/Kg	50	100	6600 {X}	4.2E+5	24000	3.4E+4	1.5E+8	8.4E+5	9.2E+5	<58	<71	<72	<61
Trichloroethylene	ug/Kg	50	100	4000 {X}	4.4E+5	1900	1.5E+4	3.5E+7	5.0E+5 {C,DD}	5.0E+5	<58	<71	<72	<61
Vinyl chloride	ug/Kg	40	40	260 {X}	20000	2800	1.0E+5	5.3E+8	34000	4.9E+5	<86	<110	<110	<91
Xylene, o	ug/Kg	50	5600	820	1.5E+5 {C}	1.5E+5 {C}	3.9E+7	7.8E+10	1.5E+5 {C}	1.5E+5	<58	<71	<72	<61
Xylene, p&m	ug/Kg	100	5600	820	1.5E+5 {C}	1.5E+5 {C}	3.9E+7	7.8E+10	1.5E+5 {C}	1.5E+5	<86	<110	<110	<91
Xylene (Total)	ug/Kg	150	5600	820	1.5E+5 {C}	1.5E+5 {C}	3.9E+7	7.8E+10	1.5E+5 {C}	1.5E+5	<130	<160	<160	<140

Table 1
Summary of Soil Analytical Results
Dunton Park Property
Holland, Michigan

Sample Location		SB-DP-2	SB-DP-3	SB-DP-3	SB-DP-4	SB-DP-4	SB-DP-4	SB-DP-5	SB-DP-5	SB-DP-6	SB-DP-6	SB-DP-7	SB-DP-7	SB-DP-7	SB-DP-8
Lab Sample ID		0311137-02	0311171-08	0311171-09	0311137-10	0311137-11	0311137-12	0311171-01	0311171-02	0311137-08	0311137-09	0311171-03	0311171-04	0311171-05	0311137-07
Sampled By		Horizon	Horizon	Horizon	Horizon	Horizon	Horizon	Horizon	Horizon	Horizon	Horizon	Horizon	Horizon	Horizon	Horizon
Analyzed By		e-Lab	e-Lab	e-Lab	e-Lab	e-Lab	e-Lab	e-Lab	e-Lab	e-Lab	e-Lab	e-Lab	e-Lab	e-Lab	e-Lab
Sample Date		11/10/2003	11/11/2003	11/11/2003	11/11/2003	11/11/2003	11/11/2003	11/11/2003	11/11/2003	11/10/2003	11/10/2003	11/11/2003	11/11/2003	11/11/2003	11/10/2003
Sample Depth (ft.)		6'-6.8'	7.5'-8'	9'-10'	3.2'-4'	5.5'-6'	6'-6.5'	7'-7.8'	7.8'-8.2'	3'-4'	5.5'-6.5'	3'-4'	6'-7'	10'-11'	9'-10'
Soil Type:		clay/peat	organic clay	organic clay/peat	sand	clay/silt	peat	silt	organic clay	sand	clay	sand	organic clay	peat	organic clay
Inorganics	Units														
Arsenic {B}	mg/Kg	**2.1**	**6.8**	**9.8**	**1.3**	**3.3**	**1.7**	**6.7**	**15**	**1.2**	**3.2**	**1.4**	**6.4**	**9.5**	**2.1**
Chromium, Total	mg/Kg	**32**	**36**	**450**	**8.1**	**22**	**10**	**20**	**82**	**5.1**	**36**	**8.4**	**30**	**27**	**30**
Copper {B}	mg/Kg	**35**	**32**	**130**	**6.1**	**25**	**11**	**23**	**49**	**3.4**	**29**	**6.2**	**28**	**28**	**30**
Mercury (Inorganic) {B}	mg/Kg	**0.44**	---	---	<0.1	**0.28**	**0.2**	---	---	<0.1	**0.22**	---	---	---	**0.36**
Selenium {B}	mg/Kg	**0.52**	**0.29**	**0.96**	<0.2	**0.56**	**0.55**	**0.39**	**0.68**	<0.2	**0.49**	<0.2	**0.45**	**0.91**	<0.2
Silver {B}	mg/Kg	**1.6**	**1.3**	**1.2**	<0.5	**0.7**	<0.5	**0.58**	**1.7**	<0.5	**1.1**	<0.5	**0.68**	<0.51	**1.3**
Misc.	Units														
Percent Moisture	%	**39**	**36**	**64**	**10**	**40**	**24**	**38**	**56**	**4.2**	**45**	**12**	**45**	**78**	**46**
PCB's	Units														
Aroclor 1016	ug/Kg	<330	<330	<330	<330	<330	<330	<330	<330	<330	<330	<330	<330	<340	<330
Aroclor 1221	ug/Kg	<330	<330	<330	<330	<330	<330	<330	<330	<330	<330	<330	<330	<340	<330
Aroclor 1232	ug/Kg	<330	<330	<330	<330	<330	<330	<330	<330	<330	<330	<330	<330	<340	<330
Aroclor 1242	ug/Kg	<330	<330	<330	<330	<330	<330	<330	<330	<330	<330	<330	<330	<340	<330
Aroclor 1248	ug/Kg	<330	<330	<330	<330	<330	<330	<330	<330	<330	<330	<330	<330	<340	<330
Aroclor 1254	ug/Kg	<330	<330	<330	<330	<330	<330	<330	<330	<330	<330	<330	<330	<340	<330
Aroclor 1260	ug/Kg	<330	<330	<330	<330	<330	<330	<330	<330	<330	<330	<330	<330	<340	<330
Semi-Volatiles	Units														
Acenaphthene	ug/Kg	<330	<330	<330	<330	<330	<330	<330	<330	<330	<330	<330	<330	<340	<330
Acenaphthylene	ug/Kg	<330	<330	<330	<330	<330	<330	<330	<330	<330	<330	<330	<330	<340	<330
Aniline {I}	ug/Kg	<1700	<1700	<1700	<1700	<1700	<1700	<1700	<1700	<1700	<1700	<1700	<1700	<1700	<1700
Anthracene	ug/Kg	<330	<330	<330	<330	<330	<330	<330	<330	<330	<330	<330	<330	<340	<330
Benzo(a)anthracene {Q}	ug/Kg	<330	<330	<330	<330	<330	<330	<330	<330	<330	<330	<330	<330	<340	<330
Benzo(a)pyrene {Q}	ug/Kg	<330	<330	<330	<330	<330	<330	<330	<330	<330	<330	<330	<330	<340	<330
Benzo(b)fluoranthene {Q}	ug/Kg	<330	<330	<330	<330	<330	<330	<330	<330	<330	<330	<330	<330	<340	<330
Benzo(g,h,i)perylene	ug/Kg	<330	<330	<330	<330	<330	<330	<330	<330	<330	<330	<330	<330	<340	<330
Benzo(k)fluoranthene {Q}	ug/Kg	<330	<330	<330	<330	<330	<330	<330	<330	<330	<330	<330	<330	<340	<330
Benzophenone	ug/Kg	<570	<510	**1000**	<360	<570	<440	<530	<760	<350	<580	<370	<590	<1500	<590
bis(2-Chloroethoxy)methane	ug/Kg	<330	<330	<330	<330	<330	<330	<330	<330	<330	<330	<330	<330	<340	<330
bis(2-Chloroethyl)ether {I}	ug/Kg	<330	<330	<330	<330	<330	<330	<330	<330	<330	<330	<330	<330	<340	<330
bis(2-Chloroisopropyl)ether	ug/Kg	<330	<330	<330	<330	<330	<330	<330	<330	<330	<330	<330	<330	<340	<330
bis(2-Ethylhexyl)phthalate	ug/Kg	<330	<330	<470	<330	<330	<330	<330	<330	<330	<330	<330	<330	<770	<330
4-Bromo diphenyl ether	ug/Kg	<330	<330	<330	<330	<330	<330	<330	<330	<330	<330	<330	<330	<340	<330
Butyl benzyl phthalate	ug/Kg	<330	<330	<330	<330	<330	<330	<330	<330	<330	<330	<330	<330	<340	<330
Carbazole	ug/Kg	<330	<330	<330	<330	<330	<330	<330	<330	<330	<330	<330	<330	<340	<330
4-Chloro diphenyl ether	ug/Kg	<330	<330	<330	<330	<330	<330	<330	<330	<330	<330	<330	<330	<340	<330
4-Chloro-3-methylphenol	ug/Kg	<330	<330	<330	<330	<330	<330	<330	<330	<330	<330	<330	<330	<340	<330
4-Chloroaniline	ug/Kg	<1700	<1700	<1700	<1700	<1700	<1700	<1700	<1700	<1700	<1700	<1700	<1700	<1700	<1700
beta-Chloronaphthalene	ug/Kg	<330	<330	<330	<330	<330	<330	<330	<330	<330	<330	<330	<330	<340	<330
2-Chlorophenol	ug/Kg	<330	<330	<330	<330	<330	<330	<330	<330	<330	<330	<330	<330	<340	<330
Chrysene {Q}	ug/Kg	<330	<330	<330	<330	<330	<330	<330	<330	<330	<330	<330	<330	<340	<330
Di-n-butyl phthalate	ug/Kg	<570	<510	<900	<360	<570	<440	<530	<760	<350	<580	<370	<590	<1500	<590
Di-n-octyl phthalate	ug/Kg	<330	<330	<330	<330	<330	<330	<330	<330	<330	<330	<330	<330	<340	<330
Dibenzo(a,h)anthracene {Q}	ug/Kg	<330	<330	<330	<330	<330	<330	<330	<330	<330	<330	<330	<330	<340	<330
Dibenzofuran	ug/Kg	<330	<330	<330	<330	<330	<330	<330	<330	<330	<330	<330	<330	<340	<330

Table 1
Summary of Soil Analytical Results
Dunton Park Property
Holland, Michigan

Sample Location		SB-DP-2	SB-DP-3	SB-DP-3	SB-DP-4	SB-DP-4	SB-DP-4	SB-DP-5	SB-DP-5	SB-DP-6	SB-DP-6	SB-DP-7	SB-DP-7	SB-DP-7	SB-DP-8
Lab Sample ID		0311137-02	0311171-08	0311171-09	0311137-10	0311137-11	0311137-12	0311171-01	0311171-02	0311137-08	0311137-09	0311171-03	0311171-04	0311171-05	0311137-07
Sampled By		Horizon	Horizon	Horizon	Horizon	Horizon	Horizon	Horizon	Horizon	Horizon	Horizon	Horizon	Horizon	Horizon	Horizon
Analyzed By		e-Lab	e-Lab	e-Lab	e-Lab	e-Lab	e-Lab	e-Lab	e-Lab	e-Lab	e-Lab	e-Lab	e-Lab	e-Lab	e-Lab
Sample Date		11/10/2003	11/11/2003	11/11/2003	11/11/2003	11/11/2003	11/11/2003	11/11/2003	11/11/2003	11/10/2003	11/10/2003	11/11/2003	11/11/2003	11/11/2003	11/10/2003
Sample Depth (ft.)		6'-6.8'	7.5'-8'	9'-10'	3.2'-4'	5.5'-6'	6'-6.5'	7'-7.8'	7.8'-8.2'	3'-4'	5.5'-6.5'	3'-4'	6'-7'	10'-11'	9'-10'
Soil Type:		clay/peat	organic clay	organic clay/peat	sand	clay/silt	peat	silt	organic clay	sand	clay	sand	organic clay	peat	organic clay
Semi-Volatiles Cont.	Units														
1,2-Dichlorobenzene	ug/Kg	<330	<330	<330	<330	<330	<330	<330	<330	<330	<330	<330	<330	<340	<330
1,3-Dichlorobenzene	ug/Kg	<330	<330	<330	<330	<330	<330	<330	<330	<330	<330	<330	<330	<340	<330
1,4-Dichlorobenzene	ug/Kg	<330	<330	<330	<330	<330	<330	<330	<330	<330	<330	<330	<330	<340	<330
3,3'-Dichlorobenzidine	ug/Kg	<2000	<2000	<2000	<2000	<2000	<2000	<2000	<2000	<2000	<2000	<2000	<2000	<2000	<2000
2,4-Dichlorophenol	ug/Kg	<330	<330	<330	<330	<330	<330	<330	<330	<330	<330	<330	<330	<340	<330
Diethyl phthalate	ug/Kg	<330	<330	<330	<330	<330	<330	<330	<330	<330	<330	<330	<330	<340	<330
Dimethyl phthalate	ug/Kg	<330	<330	<330	<330	<330	<330	<330	<330	<330	<330	<330	<330	<340	<330
2,4-Dimethylphenol	ug/Kg	<330	<330	<330	<330	<330	<330	<330	<330	<330	<330	<330	<330	<340	<330
2,4-Dinitrophenol	ug/Kg	<1700	<1700	<1700	<1700	<1700	<1700	<1700	<1700	<1700	<1700	<1700	<1700	<1700	<1700
2,4-Dinitrotoluene	ug/Kg	<330	<330	<330	<330	<330	<330	<330	<330	<330	<330	<330	<330	<340	<330
2,6-Dinitrotoluene	ug/Kg	<330	<330	<330	<330	<330	<330	<330	<330	<330	<330	<330	<330	<340	<330
5,5-Diphenylhydantoin	ug/Kg	**12000**	**3900**	**22000**	<600	**7900**	**3400**	**1300**	**15000**	<600	**990**	<600	**5700**	**71000**	**12000**
Fluoranthene	ug/Kg	<330	<330	<330	<330	<330	<330	<330	<330	<330	<330	**420**	<330	<340	<330
Fluorene	ug/Kg	<330	<330	<330	<330	<330	<330	<330	<330	<330	<330	<330	<330	<340	<330
Hexachlorobenzene (C-66)	ug/Kg	<330	<330	<330	<330	<330	<330	<330	<330	<330	<330	<330	<330	<340	<330
Hexachlorobutadiene (C-46)	ug/Kg	<330	<330	<330	<330	<330	<330	<330	<330	<330	<330	<330	<330	<340	<330
Hexachlorocyclopentadiene (C-56)	ug/Kg	<330	<330	<330	<330	<330	<330	<330	<330	<330	<330	<330	<330	<340	<330
Hexachloroethane	ug/Kg	<330	<330	<330	<330	<330	<330	<330	<330	<330	<330	<330	<330	<340	<330
Indeno(1,2,3-cd)pyrene {Q}	ug/Kg	<330	<330	<330	<330	<330	<330	<330	<330	<330	<330	<330	<330	<340	<330
Isophorone	ug/Kg	<330	<330	<330	<330	<330	<330	<330	<330	<330	<330	<330	<330	<340	<330
2-Methyl-4,6-dinitrophenol	ug/Kg	<1700	<1700	<1700	<1700	<1700	<1700	<1700	<1700	<1700	<1700	<1700	<1700	<1700	<1700
2-Methylnaphthalene	ug/Kg	<330	<330	<330	<330	<330	<330	<330	<330	<330	<330	<330	<330	<340	<330
2-Methylphenol {J}	ug/Kg	<330	<330	<330	<330	<330	<330	<330	<330	<330	<330	<330	<330	<340	<330
4-Methylphenol {J}	ug/Kg	<330	<330	<330	<330	<330	<330	<330	<330	<330	<330	<330	<330	<340	<330
Naphthalene	ug/Kg	<330	<330	<330	<330	<330	<330	<330	<330	<330	<330	<330	<330	<340	<330
2-Nitroaniline	ug/Kg	<1700	<1700	<1700	<1700	<1700	<1700	<1700	<1700	<1700	<1700	<1700	<1700	<1700	<1700
3-Nitroaniline	ug/Kg	<1700	<1700	<1700	<1700	<1700	<1700	<1700	<1700	<1700	<1700	<1700	<1700	<1700	<1700
4-Nitroaniline	ug/Kg	<1700	<1700	<1700	<1700	<1700	<1700	<1700	<1700	<1700	<1700	<1700	<1700	<1700	<1700
Nitrobenzene {I}	ug/Kg	<330	<330	<330	<330	<330	<330	<330	<330	<330	<330	<330	<330	<340	<330
2-Nitrophenol	ug/Kg	<330	<330	<330	<330	<330	<330	<330	<330	<330	<330	<330	<330	<340	<330
4-Nitrophenol	ug/Kg	<1700	<1700	<1700	<1700	<1700	<1700	<1700	<1700	<1700	<1700	<1700	<1700	<1700	<1700
n-Nitroso-di-n-propylamine	ug/Kg	<330	<330	<330	<330	<330	<330	<330	<330	<330	<330	<330	<330	<340	<330
N-Nitrosodiphenylamine	ug/Kg	<330	<330	<330	<330	<330	<330	<330	<330	<330	<330	<330	<330	<340	<330
Pentachlorophenol	ug/Kg	<800	<800	<810	<800	<800	<800	<800	<810	<800	<810	<800	<800	<810	<800
Phenanthrene	ug/Kg	<330	<330	<330	<330	<330	<330	<330	<330	<330	<330	**490**	<330	<340	<330
Phenol	ug/Kg	<330	<330	<330	<330	<330	<330	<330	<330	<330	<330	<330	<330	<340	<330
Pyrene	ug/Kg	<330	<330	<330	<330	<330	<330	<330	<330	<330	<330	**420**	<330	<340	<330
1,2,4-Trichlorobenzene	ug/Kg	<330	<330	<330	<330	<330	<330	<330	<330	<330	<330	<330	<330	<340	<330
2,4,5-Trichlorophenol	ug/Kg	<330	<330	<330	<330	<330	<330	<330	<330	<330	<330	<330	<330	<340	<330
2,4,6-Trichlorophenol	ug/Kg	<330	<330	<330	<330	<330	<330	<330	<330	<330	<330	<330	<330	<340	<330
Volatiles	Units														
Acetone {I}	ug/Kg	<1200	<800	<1700	<570	<800	<710	<740	<1300	<590	<820	<510	<840	<4200	<1300
Benzene {I}	ug/Kg	<110	<71	<150	<51	<71	<63	<66	<110	<52	<73	<45	<75	<370	<110
Bromodichloromethane	ug/Kg	<160	<110	<230	<76	<110	<95	<99	<170	<78	<110	<68	<110	<560	<170

Table 1
Summary of Soil Analytical Results
Dunton Park Property
Holland, Michigan

Sample Location		SB-DP-2	SB-DP-3	SB-DP-3	SB-DP-4	SB-DP-4	SB-DP-4	SB-DP-5	SB-DP-5	SB-DP-6	SB-DP-6	SB-DP-7	SB-DP-7	SB-DP-7	SB-DP-8
Lab Sample ID		0311137-02	0311171-08	0311171-09	0311137-10	0311137-11	0311137-12	0311171-01	0311171-02	0311137-08	0311137-09	0311171-03	0311171-04	0311171-05	0311137-07
Sampled By		Horizon	Horizon	Horizon	Horizon	Horizon	Horizon	Horizon	Horizon	Horizon	Horizon	Horizon	Horizon	Horizon	Horizon
Analyzed By		e-Lab	e-Lab	e-Lab	e-Lab	e-Lab	e-Lab	e-Lab	e-Lab	e-Lab	e-Lab	e-Lab	e-Lab	e-Lab	e-Lab
Sample Date		11/10/2003	11/11/2003	11/11/2003	11/11/2003	11/11/2003	11/11/2003	11/11/2003	11/11/2003	11/10/2003	11/10/2003	11/11/2003	11/11/2003	11/11/2003	11/10/2003
Sample Depth (ft.)		6'-6.8'	7.5'-8'	9'-10'	3.2'-4'	5.5'-6'	6'-6.5'	7'-7.8'	7.8'-8.2'	3'-4'	5.5'-6.5'	3'-4'	6'-7'	10'-11'	9'-10'
Soil Type:		clay/peat	organic clay	organic clay/peat	sand	clay/silt	peat	silt	organic clay	sand	clay	sand	organic clay	peat	organic clay
Volatiles Cont.	Units														
Bromoform	ug/Kg	<160	<110	<230	<76	<110	<95	<99	<170	<78	<110	<68	<110	<560	<170
Bromomethane	ug/Kg	<410	<270	<580	<190	<270	<240	<250	<420	<200	<270	<170	<280	<1400	<430
2-Butanone (MEK) {I}	ug/Kg	<410	<270	<580	<190	<270	<240	<250	<420	<200	<270	<170	<280	<1400	<430
Carbon disulfide {I,R}	ug/Kg	<410	<270	**610**	<190	**980**	<240	<250	<420	<200	<270	<170	<280	<1400	<430
Carbon tetrachloride	ug/Kg	<110	<71	<150	<51	<71	<63	<66	<110	<52	<73	<45	<75	<370	<110
Chlorobenzene {I}	ug/Kg	**310**	**310**	**810**	<51	**190**	**230**	<66	**510**	<52	**160**	<45	<75	**3400**	**2400**
Chloroethane {I}	ug/Kg	<410	<270	<580	<190	<270	<240	<250	<420	<200	<270	<170	<280	<1400	<430
Chloroform	ug/Kg	<110	<71	<150	<51	<71	<63	<66	<110	<52	<73	<45	<75	<370	<110
Chloromethane {I}	ug/Kg	<410	<270	<580	<190	<270	<240	<250	<420	<200	<270	<170	<280	<1400	<430
Dibromochloromethane	ug/Kg	<160	<110	<230	<76	<110	<95	<99	<170	<78	<110	<68	<110	<560	<170
1,1-Dichloroethane {I}	ug/Kg	<110	<71	<150	<51	<71	<63	<66	<110	<52	<73	<45	<75	<370	<110
1,2-Dichloroethane {I}	ug/Kg	<110	<71	<150	<51	<71	<63	<66	<110	<52	<73	<45	<75	<370	<110
1,1-Dichloroethylene {I}	ug/Kg	<110	<71	<150	<51	<71	<63	<66	<110	<52	<73	<45	<75	<370	<110
cis-1,2-Dichloroethylene {I}	ug/Kg	<110	<71	<150	<51	<71	<63	<66	<110	<52	<73	<45	<75	<370	<110
trans-1,2-Dichloroethylene	ug/Kg	<110	<71	<150	<51	<71	<63	<66	<110	<52	<73	<45	<75	<370	<110
1,2-Dichloroethylene {I} Total	ug/Kg	<160	<110	<230	<76	<110	<95	<99	<170	<78	<110	<68	<110	<560	<170
1,2-Dichloropropane {I}	ug/Kg	<110	<71	<150	<51	<71	<63	<66	<110	<52	<73	<45	<75	<370	<110
cis-1,3-Dichloropropene {I,J}	ug/Kg	<110	<71	<150	<51	<71	<63	<66	<110	<52	<73	<45	<75	<370	<110
trans-1,3-Dichloropropene {I, J}	ug/Kg	<110	<71	<150	<51	<71	<63	<66	<110	<52	<73	<45	<75	<370	<110
1,3-Dichloropropene Total	ug/Kg	<160	<110	<230	<76	<110	<95	<99	<170	<78	<110	<68	<110	<560	<170
Ethylbenzene {I}	ug/Kg	<110	<71	<150	<51	<71	<63	<66	<110	<52	<73	<45	<75	<370	<110
2-Hexanone {I}	ug/Kg	<410	<270	<580	<190	<270	<240	<250	<420	<200	<270	<170	<280	<1400	<430
4-Methyl-2-pentanone (MIBK) {I}	ug/Kg	<410	<270	<580	<190	<270	<240	<250	<420	<200	<270	<170	<280	<1400	<430
Methylene chloride	ug/Kg	<410	<270	<580	<190	<270	<240	<250	<420	<200	<270	<170	<280	<1400	<430
Styrene {I}	ug/Kg	<110	<71	<150	<51	<71	<63	<66	<110	<52	<73	<45	<75	<370	<110
1,1,2,2-Tetrachloroethane	ug/Kg	<160	<110	<230	<76	<110	<95	<99	<170	<78	<110	<68	<110	<560	<170
Tetrachloroethylene	ug/Kg	<110	<71	<150	<51	<71	<63	<66	<110	<52	<73	<45	<75	<370	<110
Toluene {I}	ug/Kg	<110	<71	<150	<51	<71	<63	<66	<110	<52	<73	<45	<75	<370	<110
1,1,1-Trichloroethane	ug/Kg	<110	<71	<150	<51	<71	<63	<66	<110	<52	<73	<45	<75	<370	<110
1,1,2-Trichloroethane	ug/Kg	<110	<71	<150	<51	<71	<63	<66	<110	<52	<73	<45	<75	<370	<110
Trichloroethylene	ug/Kg	<110	<71	<150	<51	<71	<63	<66	<110	<52	<73	<45	<75	<370	<110
Vinyl chloride	ug/Kg	<160	<110	<230	<76	<110	<95	<99	<170	<78	<110	<68	<110	<560	<170
Xylene, o	ug/Kg	<110	<71	<150	<51	<71	<63	<66	<110	<52	<73	<45	<75	<370	<110
Xylene, p&m	ug/Kg	<160	<110	<230	<76	<110	<95	<99	<170	<78	<110	<68	<110	<560	<170
Xylene (Total)	ug/Kg	<240	<160	<350	<110	<160	<140	<150	<250	<120	<160	<100	<170	<840	<260

Table 1
Summary of Soil Analytical Results
Dunton Park Property
Holland, Michigan

Sample Location		SB-DP-9	SB-DP-9	SB-DP-9	SB-DP-10	SB-DP-11	SB-DP-11	SB-DP-12	SB-DP-13	SB-DP-14	SB-DP-15	SB-DP-15	SB-DP-16	SB-DP-16	SB-DP-17
Lab Sample ID		0311171-06	0311171-07	0311344-01	0311137-06	0311344-02	0311344-03	0311344-04	0311344-05	0311344-06	0311344-07	0311344-08	0311364-01	0311364-02	0311364-03
Sampled By		Horizon	Horizon	Horizon	Horizon	Horizon	Horizon	Horizon	Horizon	Horizon	Horizon	Horizon	Horizon	Horizon	Horizon
Analyzed By		e-Lab	e-Lab	e-Lab	e-Lab	e-Lab	e-Lab	e-Lab	e-Lab	e-Lab	e-Lab	e-Lab	e-Lab	e-Lab	e-Lab
Sample Date		11/11/2003	11/11/2003	11/25/2003	11/10/2003	11/25/2003	11/25/2003	11/25/2003	11/25/2003	11/25/2003	11/25/2003	11/25/2003	11/26/2003	11/26/2003	11/26/2003
Sample Depth (ft.)		3'-3.5'	6'-7'	11.5'-12'	3'-4'	0'-0.8'	6'-6.5'	9.6'-10'	9.5'-10.5'	7.7'-8.2'	0'-1'	7.5'-8'	0'-1'	3'-4'	0'-1'
Soil Type:		sand	sand	organic clay	sand	top soil	clay	organic clay/peat	peat	peat	top soil	organic clay	top soil	organic clay	top soil
Inorganics	Units														
Arsenic {B}	mg/Kg	**1.7**	**1.2**	---	**2.5**	---	---	---	---	---	---	---	---	---	---
Chromium, Total	mg/Kg	**6.7**	**6.7**	---	**5.2**	---	---	---	---	---	---	---	---	---	---
Copper {B}	mg/Kg	**3.7**	**5.6**	---	**2.1**	---	---	---	---	---	---	---	---	---	---
Mercury (Inorganic) {B}	mg/Kg	---	---	---	<0.099	---	---	---	---	---	---	---	---	---	---
Selenium {B}	mg/Kg	<0.2	<0.2	---	<0.2	---	---	---	---	---	---	---	---	---	---
Silver {B}	mg/Kg	<0.5	<0.5	---	<0.5	---	---	---	---	---	---	---	---	---	---
Misc.	Units														
Percent Moisture	%	**6.2**	**19**	**62**	**8.6**	**17**	**20**	**35**	**60**	**65**	**14**	**31**	**13**	**39**	**17**
PCB's	Units														
Aroclor 1016	ug/Kg	<330	<330	<330	<330	<330	<330	<330	<330	<330	<330	<330	<330	<330	<330
Aroclor 1221	ug/Kg	<330	<330	<330	<330	<330	<330	<330	<330	<330	<330	<330	<330	<330	<330
Aroclor 1232	ug/Kg	<330	<330	<330	<330	<330	<330	<330	<330	<330	<330	<330	<330	<330	<330
Aroclor 1242	ug/Kg	<330	<330	<330	<330	<330	<330	<330	<330	<330	<330	<330	<330	<330	<330
Aroclor 1248	ug/Kg	<330	<330	<330	<330	**490**	<330	<330	**460**	<330	<330	<330	**3000**	<330	<330
Aroclor 1254	ug/Kg	<330	<330	<330	<330	<330	<330	<330	<330	<330	<330	<330	<330	<330	<330
Aroclor 1260	ug/Kg	<330	<330	<330	<330	<330	<330	<330	<330	<330	<330	<330	<330	<330	<330
Semi-Volatiles	Units														
Acenaphthene	ug/Kg	<330	<330	---	<330	---	---	---	---	---	---	---	---	---	---
Acenaphthylene	ug/Kg	<330	<330	---	<330	---	---	---	---	---	---	---	---	---	---
Aniline {I}	ug/Kg	<1700	<1700	---	<1700	---	---	---	---	---	---	---	---	---	---
Anthracene	ug/Kg	<330	<330	---	<330	---	---	---	---	---	---	---	---	---	---
Benzo(a)anthracene {Q}	ug/Kg	<330	<330	---	<330	---	---	---	---	---	---	---	---	---	---
Benzo(a)pyrene {Q}	ug/Kg	<330	<330	---	<330	---	---	---	---	---	---	---	---	---	---
Benzo(b)fluoranthene {Q}	ug/Kg	<330	<330	---	<330	---	---	---	---	---	---	---	---	---	---
Benzo(g,h,i)perylene	ug/Kg	<330	<330	---	<330	---	---	---	---	---	---	---	---	---	---
Benzo(k)fluoranthene {Q}	ug/Kg	<330	<330	---	<330	---	---	---	---	---	---	---	---	---	---
Benzophenone	ug/Kg	<340	<400	<1300	<360	<560	<470	<680	<1200	<1400	<440	<690	<380	<790	<490
bis(2-Chloroethoxy)methane	ug/Kg	<330	<330	---	<330	---	---	---	---	---	---	---	---	---	---
bis(2-Chloroethyl)ether {I}	ug/Kg	<330	<330	---	<330	---	---	---	---	---	---	---	---	---	---
bis(2-Chloroisopropyl)ether	ug/Kg	<330	<330	---	<330	---	---	---	---	---	---	---	---	---	---
bis(2-Ethylhexyl)phthalate	ug/Kg	<330	<330	---	<330	---	---	---	---	---	---	---	---	---	---
4-Bromo diphenyl ether	ug/Kg	<330	<330	---	<330	---	---	---	---	---	---	---	---	---	---
Butyl benzyl phthalate	ug/Kg	<330	<330	---	<330	---	---	---	---	---	---	---	---	---	---
Carbazole	ug/Kg	<330	<330	---	<330	---	---	---	---	---	---	---	---	---	---
4-Chloro diphenyl ether	ug/Kg	<330	<330	---	<330	---	---	---	---	---	---	---	---	---	---
4-Chloro-3-methylphenol	ug/Kg	<330	<330	---	<330	---	---	---	---	---	---	---	---	---	---
4-Chloroaniline	ug/Kg	<1700	<1700	---	<1700	---	---	---	---	---	---	---	---	---	---
beta-Chloronaphthalene	ug/Kg	<330	<330	---	<330	---	---	---	---	---	---	---	---	---	---
2-Chlorophenol	ug/Kg	<330	<330	---	<330	---	---	---	---	---	---	---	---	---	---
Chrysene {Q}	ug/Kg	<330	<330	---	<330	---	---	---	---	---	---	---	---	---	---
Di-n-butyl phthalate	ug/Kg	<340	<400	---	<360	---	---	---	---	---	---	---	---	---	---
Di-n-octyl phthalate	ug/Kg	<330	<330	---	<330	---	---	---	---	---	---	---	---	---	---
Dibenzo(a,h)anthracene {Q}	ug/Kg	<330	<330	---	<330	---	---	---	---	---	---	---	---	---	---
Dibenzofuran	ug/Kg	<330	<330	---	<330	---	---	---	---	---	---	---	---	---	---

Table 1
Summary of Soil Analytical Results
Dunton Park Property
Holland, Michigan

Sample Location		SB-DP-9	SB-DP-9	SB-DP-9	SB-DP-10	SB-DP-11	SB-DP-11	SB-DP-12	SB-DP-13	SB-DP-14	SB-DP-15	SB-DP-15	SB-DP-16	SB-DP-16	SB-DP-17
Lab Sample ID		0311171-06	0311171-07	0311344-01	0311137-06	0311344-02	0311344-03	0311344-04	0311344-05	0311344-06	0311344-07	0311344-08	0311364-01	0311364-02	0311364-03
Sampled By		Horizon	Horizon	Horizon	Horizon	Horizon	Horizon	Horizon	Horizon	Horizon	Horizon	Horizon	Horizon	Horizon	Horizon
Analyzed By		e-Lab	e-Lab	e-Lab	e-Lab	e-Lab	e-Lab	e-Lab	e-Lab	e-Lab	e-Lab	e-Lab	e-Lab	e-Lab	e-Lab
Sample Date		11/11/2003	11/11/2003	11/25/2003	11/10/2003	11/25/2003	11/25/2003	11/25/2003	11/25/2003	11/25/2003	11/25/2003	11/25/2003	11/26/2003	11/26/2003	11/26/2003
Sample Depth (ft.)		3'-3.5'	6'-7'	11.5'-12'	3'-4'	0'-0.8'	6'-6.5'	9.6'-10'	9.5'-10.5'	7.7'-8.2'	0'-1'	7.5'-8'	0'-1'	3'-4'	0'-1'
Soil Type:		sand	sand	organic clay	sand	top soil	clay	organic clay/peat	peat	peat	top soil	organic clay	top soil	organic clay	top soil
Semi-Volatiles Cont.	Units														
1,2-Dichlorobenzene	ug/Kg	<330	<330	---	<330	---	---	---	---	---	---	---	---	---	---
1,3-Dichlorobenzene	ug/Kg	<330	<330	---	<330	---	---	---	---	---	---	---	---	---	---
1,4-Dichlorobenzene	ug/Kg	<330	<330	---	<330	---	---	---	---	---	---	---	---	---	---
3,3'-Dichlorobenzidine	ug/Kg	<2000	<2000	---	<2000	---	---	---	---	---	---	---	---	---	---
2,4-Dichlorophenol	ug/Kg	<330	<330	---	<330	---	---	---	---	---	---	---	---	---	---
Diethyl phthalate	ug/Kg	<330	<330	---	<330	---	---	---	---	---	---	---	---	---	---
Dimethyl phthalate	ug/Kg	<330	<330	---	<330	---	---	---	---	---	---	---	---	---	---
2,4-Dimethylphenol	ug/Kg	<330	<330	---	<330	---	---	---	---	---	---	---	---	---	---
2,4-Dinitrophenol	ug/Kg	<1700	<1700	---	<1700	---	---	---	---	---	---	---	---	---	---
2,4-Dinitrotoluene	ug/Kg	<330	<330	---	<330	---	---	---	---	---	---	---	---	---	---
2,6-Dinitrotoluene	ug/Kg	<330	<330	---	<330	---	---	---	---	---	---	---	---	---	---
5,5-Diphenylhydantoin	ug/Kg	<600	<600	**3100**	<600	<570	<600	**2600**	**13000**	**1200**	<600	<600	<600	<600	<600
Fluoranthene	ug/Kg	<330	<330	---	<330	---	---	---	---	---	---	---	---	---	---
Fluorene	ug/Kg	<330	<330	---	<330	---	---	---	---	---	---	---	---	---	---
Hexachlorobenzene (C-66)	ug/Kg	<330	<330	---	<330	---	---	---	---	---	---	---	---	---	---
Hexachlorobutadiene (C-46)	ug/Kg	<330	<330	---	<330	---	---	---	---	---	---	---	---	---	---
Hexachlorocyclopentadiene (C-56)	ug/Kg	<330	<330	---	<330	---	---	---	---	---	---	---	---	---	---
Hexachloroethane	ug/Kg	<330	<330	---	<330	---	---	---	---	---	---	---	---	---	---
Indeno(1,2,3-cd)pyrene {Q}	ug/Kg	<330	<330	---	<330	---	---	---	---	---	---	---	---	---	---
Isophorone	ug/Kg	<330	<330	---	<330	---	---	---	---	---	---	---	---	---	---
2-Methyl-4,6-dinitrophenol	ug/Kg	<1700	<1700	---	<1700	---	---	---	---	---	---	---	---	---	---
2-Methylnaphthalene	ug/Kg	<330	<330	---	<330	---	---	---	---	---	---	---	---	---	---
2-Methylphenol {J}	ug/Kg	<330	<330	---	<330	---	---	---	---	---	---	---	---	---	---
4-Methylphenol {J}	ug/Kg	<330	<330	---	<330	---	---	---	---	---	---	---	---	---	---
Naphthalene	ug/Kg	<330	<330	---	<330	---	---	---	---	---	---	---	---	---	---
2-Nitroaniline	ug/Kg	<1700	<1700	---	<1700	---	---	---	---	---	---	---	---	---	---
3-Nitroaniline	ug/Kg	<1700	<1700	---	<1700	---	---	---	---	---	---	---	---	---	---
4-Nitroaniline	ug/Kg	<1700	<1700	---	<1700	---	---	---	---	---	---	---	---	---	---
Nitrobenzene {I}	ug/Kg	<330	<330	---	<330	---	---	---	---	---	---	---	---	---	---
2-Nitrophenol	ug/Kg	<330	<330	---	<330	---	---	---	---	---	---	---	---	---	---
4-Nitrophenol	ug/Kg	<1700	<1700	---	<1700	---	---	---	---	---	---	---	---	---	---
n-Nitroso-di-n-propylamine	ug/Kg	<330	<330	---	<330	---	---	---	---	---	---	---	---	---	---
N-Nitrosodiphenylamine	ug/Kg	<330	<330	---	<330	---	---	---	---	---	---	---	---	---	---
Pentachlorophenol	ug/Kg	<800	<800	---	<800	---	---	---	---	---	---	---	---	---	---
Phenanthrene	ug/Kg	<330	<330	---	<330	---	---	---	---	---	---	---	---	---	---
Phenol	ug/Kg	<330	<330	---	<330	---	---	---	---	---	---	---	---	---	---
Pyrene	ug/Kg	<330	<330	---	<330	---	---	---	---	---	---	---	---	---	---
1,2,4-Trichlorobenzene	ug/Kg	<330	<330	---	<330	---	---	---	---	---	---	---	---	---	---
2,4,5-Trichlorophenol	ug/Kg	<330	<330	---	<330	---	---	---	---	---	---	---	---	---	---
2,4,6-Trichlorophenol	ug/Kg	<330	<330	---	<330	---	---	---	---	---	---	---	---	---	---
Volatiles	Units														
Acetone {I}	ug/Kg	<480	<560	---	<490	---	---	---	---	---	---	---	---	---	---
Benzene {I}	ug/Kg	<43	<50	---	<44	---	---	---	---	---	---	---	---	---	---
Bromodichloromethane	ug/Kg	<64	<75	---	<66	---	---	---	---	---	---	---	---	---	---

Table 1
Summary of Soil Analytical Results
Dunton Park Property
Holland, Michigan

Sample Location		SB-DP-9	SB-DP-9	SB-DP-9	SB-DP-10	SB-DP-11	SB-DP-11	SB-DP-12	SB-DP-13	SB-DP-14	SB-DP-15	SB-DP-15	SB-DP-16	SB-DP-16	SB-DP-17
Lab Sample ID		0311171-06	0311171-07	0311344-01	0311137-06	0311344-02	0311344-03	0311344-04	0311344-05	0311344-06	0311344-07	0311344-08	0311364-01	0311364-02	0311364-03
Sampled By		Horizon	Horizon	Horizon	Horizon	Horizon	Horizon	Horizon	Horizon	Horizon	Horizon	Horizon	Horizon	Horizon	Horizon
Analyzed By		e-Lab	e-Lab	e-Lab	e-Lab	e-Lab	e-Lab	e-Lab	e-Lab	e-Lab	e-Lab	e-Lab	e-Lab	e-Lab	e-Lab
Sample Date		11/11/2003	11/11/2003	11/25/2003	11/10/2003	11/25/2003	11/25/2003	11/25/2003	11/25/2003	11/25/2003	11/25/2003	11/25/2003	11/26/2003	11/26/2003	11/26/2003
Sample Depth (ft.)		3'-3.5'	6'-7'	11.5'-12'	3'-4'	0'-0.8'	6'-6.5'	9.6'-10'	9.5'-10.5'	7.7'-8.2'	0'-1'	7.5'-8'	0'-1'	3'-4'	0'-1'
Soil Type:		sand	sand	organic clay	sand	top soil	clay	organic clay/peat	peat	peat	top soil	organic clay	top soil	organic clay	top soil
Volatiles Cont.	Units														
Bromoform	ug/Kg	<64	<75	---	<66	---	---	---	---	---	---	---	---	---	---
Bromomethane	ug/Kg	<160	<190	---	<160	---	---	---	---	---	---	---	---	---	---
2-Butanone (MEK) {I}	ug/Kg	<160	<190	---	<160	---	---	---	---	---	---	---	---	---	---
Carbon disulfide {I,R}	ug/Kg	<160	<190	---	<160	---	---	---	---	---	---	---	---	---	---
Carbon tetrachloride	ug/Kg	<43	<50	---	<44	---	---	---	---	---	---	---	---	---	---
Chlorobenzene {I}	ug/Kg	<43	<50	**490**	<44	<48	<51	<70	**3000**	<180	<49	<58	<46	<66	<48
Chloroethane {I}	ug/Kg	<160	<190	---	<160	---	---	---	---	---	---	---	---	---	---
Chloroform	ug/Kg	<43	<50	---	<44	---	---	---	---	---	---	---	---	---	---
Chloromethane {I}	ug/Kg	<160	<190	---	<160	---	---	---	---	---	---	---	---	---	---
Dibromochloromethane	ug/Kg	<64	<75	---	<66	---	---	---	---	---	---	---	---	---	---
1,1-Dichloroethane {I}	ug/Kg	<43	<50	---	<44	---	---	---	---	---	---	---	---	---	---
1,2-Dichloroethane {I}	ug/Kg	<43	<50	---	<44	---	---	---	---	---	---	---	---	---	---
1,1-Dichloroethylene {I}	ug/Kg	<43	<50	---	<44	---	---	---	---	---	---	---	---	---	---
cis-1,2-Dichloroethylene {I}	ug/Kg	<43	<50	---	<44	---	---	---	---	---	---	---	---	---	---
trans-1,2-Dichloroethylene	ug/Kg	<43	<50	---	<44	---	---	---	---	---	---	---	---	---	---
1,2-Dichloroethylene {I} Total	ug/Kg	<64	<75	---	<66	---	---	---	---	---	---	---	---	---	---
1,2-Dichloropropane {I}	ug/Kg	<43	<50	---	<44	---	---	---	---	---	---	---	---	---	---
cis-1,3-Dichloropropene {I,J}	ug/Kg	<43	<50	---	<44	---	---	---	---	---	---	---	---	---	---
trans-1,3-Dichloropropene {I, J}	ug/Kg	<43	<50	---	<44	---	---	---	---	---	---	---	---	---	---
1,3-Dichloropropene Total	ug/Kg	<64	<75	---	<66	---	---	---	---	---	---	---	---	---	---
Ethylbenzene {I}	ug/Kg	<43	<50	---	<44	---	---	---	---	---	---	---	---	---	---
2-Hexanone {I}	ug/Kg	<160	<190	---	<160	---	---	---	---	---	---	---	---	---	---
4-Methyl-2-pentanone (MIBK) {I}	ug/Kg	<160	<190	---	<160	---	---	---	---	---	---	---	---	---	---
Methylene chloride	ug/Kg	<160	<190	---	<160	---	---	---	---	---	---	---	---	---	---
Styrene {I}	ug/Kg	<43	<50	---	<44	---	---	---	---	---	---	---	---	---	---
1,1,2,2-Tetrachloroethane	ug/Kg	<64	<75	---	<66	---	---	---	---	---	---	---	---	---	---
Tetrachloroethylene	ug/Kg	<43	<50	---	<44	---	---	---	---	---	---	---	---	---	---
Toluene {I}	ug/Kg	<43	<50	---	<44	---	---	---	---	---	---	---	---	---	---
1,1,1-Trichloroethane	ug/Kg	<43	<50	---	<44	---	---	---	---	---	---	---	---	---	---
1,1,2-Trichloroethane	ug/Kg	<43	<50	---	<44	---	---	---	---	---	---	---	---	---	---
Trichloroethylene	ug/Kg	<43	<50	---	<44	---	---	---	---	---	---	---	---	---	---
Vinyl chloride	ug/Kg	<64	<75	---	<66	---	---	---	---	---	---	---	---	---	---
Xylene, o	ug/Kg	<43	<50	---	<44	---	---	---	---	---	---	---	---	---	---
Xylene, p&m	ug/Kg	<64	<75	---	<66	---	---	---	---	---	---	---	---	---	---
Xylene (Total)	ug/Kg	<96	<110	---	<98	---	---	---	---	---	---	---	---	---	---

Table 1
Summary of Soil Analytical Results
Dunton Park Property
Holland, Michigan

Sample Location		SB-DP-17	SB-DP-17	SB-DP-17	SB-DP-17	SB-DP-18	SB-DP-18	SB-DP-19	SB-DP-19	SB-DP-19	SB-DP-20	SB-DP-20	SB-DP-21	SB-DP-21	SB-DP-22	SB-DP-22
Lab Sample ID		0311364-04	0311364-05	0311364-06	0311364-07	0311364-08	0311364-09	0311364-10	0311364-11	0311364-12	0312045-01	0312045-02	0311364-19	0311364-20	0311364-13	0311364-14
Sampled By		Horizon	Horizon	Horizon	Horizon	Horizon	Horizon	Horizon	Horizon	Horizon	Horizon	Horizon	Horizon	Horizon	Horizon	Horizon
Analyzed By		e-Lab	e-Lab	e-Lab	e-Lab	e-Lab	e-Lab	e-Lab	e-Lab	e-Lab	e-Lab	e-Lab	e-Lab	e-Lab	e-Lab	e-Lab
Sample Date		11/26/2003	11/26/2003	11/26/2003	11/26/2003	11/26/2003	11/26/2003	11/26/2003	11/26/2003	11/26/2003	12/2/2003	12/2/2003	11/26/2003	11/26/2003	11/26/2003	11/26/2003
Sample Depth (ft.)		1.7'-2.7'	3.5'-4.1'	6'-7'	8'-8.5'	7'-8'	10'-11'	0'-1'	7.5'-8'	8'-9'	0'-1'	2'-3'	6'-7'	9'-10'	0'-0.4'	2'-3'
Soil Type:		clay	organic clay	clay	peat	organic clay	peat	top soil	organic clay	peat	top soil	clay	organic clay	peat	top soil	clay
Inorganics	Units															
Arsenic {B}	mg/Kg	---	---	---	---	---	---	---	---	---	---	---	---	---	---	---
Chromium, Total	mg/Kg	---	---	---	---	---	---	---	---	---	---	---	---	---	---	---
Copper {B}	mg/Kg	---	---	---	---	---	---	---	---	---	---	---	---	---	---	---
Mercury (Inorganic) {B}	mg/Kg	---	---	---	---	---	---	---	---	---	---	---	---	---	---	---
Selenium {B}	mg/Kg	---	---	---	---	---	---	---	---	---	---	---	---	---	---	---
Silver {B}	mg/Kg	---	---	---	---	---	---	---	---	---	---	---	---	---	---	---
Misc.	Units															
Percent Moisture	%	**13**	**31**	**51**	**71**	**47**	**84**	**14**	**75**	**80**	**19**	**35**	**39**	**83**	**15**	**16**
PCB's	Units															
Aroclor 1016	ug/Kg	<330	<330	<330	<330	<330	<320	<330	<330	<320	<330	<330	<330	<320	<330	<330
Aroclor 1221	ug/Kg	<330	<330	<330	<330	<330	<320	<330	<330	<320	<330	<330	<330	<320	<330	<330
Aroclor 1232	ug/Kg	<330	<330	<330	<330	<330	<320	<330	<330	<320	<330	<330	<330	<320	<330	<330
Aroclor 1242	ug/Kg	<330	<330	<330	<330	**3100**	<320	<330	<330	<320	<330	<330	<330	<320	<330	<330
Aroclor 1248	ug/Kg	<330	<330	<330	<330	<330	<320	<330	<330	<320	<330	<330	**1000**	<320	<330	<330
Aroclor 1254	ug/Kg	<330	<330	<330	<330	<330	<320	<330	<330	<320	<330	<330	<330	<320	<330	<330
Aroclor 1260	ug/Kg	<330	<330	<330	<330	<330	<320	<330	<330	<320	<330	<330	<330	<320	<330	<330
Semi-Volatiles	Units															
Acenaphthene	ug/Kg	---	---	---	---	---	---	---	---	---	---	---	---	---	---	---
Acenaphthylene	ug/Kg	---	---	---	---	---	---	---	---	---	---	---	---	---	---	---
Aniline {I}	ug/Kg	---	---	---	---	---	---	---	---	---	---	---	---	---	---	---
Anthracene	ug/Kg	---	---	---	---	---	---	---	---	---	---	---	---	---	---	---
Benzo(a)anthracene {Q}	ug/Kg	---	---	---	---	---	---	---	---	---	---	---	---	---	---	---
Benzo(a)pyrene {Q}	ug/Kg	---	---	---	---	---	---	---	---	---	---	---	---	---	---	---
Benzo(b)fluoranthene {Q}	ug/Kg	---	---	---	---	---	---	---	---	---	---	---	---	---	---	---
Benzo(g,h,i)perylene	ug/Kg	---	---	---	---	---	---	---	---	---	---	---	---	---	---	---
Benzo(k)fluoranthene {Q}	ug/Kg	---	---	---	---	---	---	---	---	---	---	---	---	---	---	---
Benzophenone	ug/Kg	<550	<670	<990	<1700	<920	<2900	<570	<1900	<2400	<600	<750	<770	<2800	<580	<560
bis(2-Chloroethoxy)methane	ug/Kg	---	---	---	---	---	---	---	---	---	---	---	---	---	---	---
bis(2-Chloroethyl)ether {I}	ug/Kg	---	---	---	---	---	---	---	---	---	---	---	---	---	---	---
bis(2-Chloroisopropyl)ether	ug/Kg	---	---	---	---	---	---	---	---	---	---	---	---	---	---	---
bis(2-Ethylhexyl)phthalate	ug/Kg	---	---	---	---	---	---	---	---	---	---	---	---	---	---	---
4-Bromo diphenyl ether	ug/Kg	---	---	---	---	---	---	---	---	---	---	---	---	---	---	---
Butyl benzyl phthalate	ug/Kg	---	---	---	---	---	---	---	---	---	---	---	---	---	---	---
Carbazole	ug/Kg	---	---	---	---	---	---	---	---	---	---	---	---	---	---	---
4-Chloro diphenyl ether	ug/Kg	---	---	---	---	---	---	---	---	---	---	---	---	---	---	---
4-Chloro-3-methylphenol	ug/Kg	---	---	---	---	---	---	---	---	---	---	---	---	---	---	---
4-Chloroaniline	ug/Kg	---	---	---	---	---	---	---	---	---	---	---	---	---	---	---
beta-Chloronaphthalene	ug/Kg	---	---	---	---	---	---	---	---	---	---	---	---	---	---	---
2-Chlorophenol	ug/Kg	---	---	---	---	---	---	---	---	---	---	---	---	---	---	---
Chrysene {Q}	ug/Kg	---	---	---	---	---	---	---	---	---	---	---	---	---	---	---
Di-n-butyl phthalate	ug/Kg	---	---	---	---	---	---	---	---	---	---	---	---	---	---	---
Di-n-octyl phthalate	ug/Kg	---	---	---	---	---	---	---	---	---	---	---	---	---	---	---
Dibenzo(a,h)anthracene {Q}	ug/Kg	---	---	---	---	---	---	---	---	---	---	---	---	---	---	---
Dibenzofuran	ug/Kg	---	---	---	---	---	---	---	---	---	---	---	---	---	---	---

Table 1
Summary of Soil Analytical Results
Dunton Park Property
Holland, Michigan

Sample Location		SB-DP-17	SB-DP-17	SB-DP-17	SB-DP-17	SB-DP-18	SB-DP-18	SB-DP-19	SB-DP-19	SB-DP-19	SB-DP-20	SB-DP-20	SB-DP-21	SB-DP-21	SB-DP-22	SB-DP-22
Lab Sample ID		0311364-04	0311364-05	0311364-06	0311364-07	0311364-08	0311364-09	0311364-10	0311364-11	0311364-12	0312045-01	0312045-02	0311364-19	0311364-20	0311364-13	0311364-14
Sampled By		Horizon	Horizon	Horizon	Horizon	Horizon	Horizon	Horizon	Horizon	Horizon	Horizon	Horizon	Horizon	Horizon	Horizon	Horizon
Analyzed By		e-Lab	e-Lab	e-Lab	e-Lab	e-Lab	e-Lab	e-Lab	e-Lab	e-Lab	e-Lab	e-Lab	e-Lab	e-Lab	e-Lab	e-Lab
Sample Date		11/26/2003	11/26/2003	11/26/2003	11/26/2003	11/26/2003	11/26/2003	11/26/2003	11/26/2003	11/26/2003	12/2/2003	12/2/2003	11/26/2003	11/26/2003	11/26/2003	11/26/2003
Sample Depth (ft.)		1.7'-2.7'	3.5'-4.1'	6'-7'	8'-8.5'	7'-8'	10'-11'	0'-1'	7.5'-8'	8'-9'	0'-1'	2'-3'	6'-7'	9'-10'	0'-0.4'	2'-3'
Soil Type:		clay	organic clay	clay	peat	organic clay	peat	top soil	organic clay	peat	top soil	clay	organic clay	peat	top soil	clay
Semi-Volatiles Cont.	Units															
1,2-Dichlorobenzene	ug/Kg	---	---	---	---	---	---	---	---	---	---	---	---	---	---	---
1,3-Dichlorobenzene	ug/Kg	---	---	---	---	---	---	---	---	---	---	---	---	---	---	---
1,4-Dichlorobenzene	ug/Kg	---	---	---	---	---	---	---	---	---	---	---	---	---	---	---
3,3'-Dichlorobenzidine	ug/Kg	---	---	---	---	---	---	---	---	---	---	---	---	---	---	---
2,4-Dichlorophenol	ug/Kg	---	---	---	---	---	---	---	---	---	---	---	---	---	---	---
Diethyl phthalate	ug/Kg	---	---	---	---	---	---	---	---	---	---	---	---	---	---	---
Dimethyl phthalate	ug/Kg	---	---	---	---	---	---	---	---	---	---	---	---	---	---	---
2,4-Dimethylphenol	ug/Kg	---	---	---	---	---	---	---	---	---	---	---	---	---	---	---
2,4-Dinitrophenol	ug/Kg	---	---	---	---	---	---	---	---	---	---	---	---	---	---	---
2,4-Dinitrotoluene	ug/Kg	---	---	---	---	---	---	---	---	---	---	---	---	---	---	---
2,6-Dinitrotoluene	ug/Kg	---	---	---	---	---	---	---	---	---	---	---	---	---	---	---
5,5-Diphenylhydantoin	ug/Kg	<600	<600	**850**	**3800**	**8000**	**150000**	<600	<1200	**1800**	<600	<600	**4000**	<1800	<600	<600
Fluoranthene	ug/Kg	---	---	---	---	---	---	---	---	---	---	---	---	---	---	---
Fluorene	ug/Kg	---	---	---	---	---	---	---	---	---	---	---	---	---	---	---
Hexachlorobenzene (C-66)	ug/Kg	---	---	---	---	---	---	---	---	---	---	---	---	---	---	---
Hexachlorobutadiene (C-46)	ug/Kg	---	---	---	---	---	---	---	---	---	---	---	---	---	---	---
Hexachlorocyclopentadiene (C-56)	ug/Kg	---	---	---	---	---	---	---	---	---	---	---	---	---	---	---
Hexachloroethane	ug/Kg	---	---	---	---	---	---	---	---	---	---	---	---	---	---	---
Indeno(1,2,3-cd)pyrene {Q}	ug/Kg	---	---	---	---	---	---	---	---	---	---	---	---	---	---	---
Isophorone	ug/Kg	---	---	---	---	---	---	---	---	---	---	---	---	---	---	---
2-Methyl-4,6-dinitrophenol	ug/Kg	---	---	---	---	---	---	---	---	---	---	---	---	---	---	---
2-Methylnaphthalene	ug/Kg	---	---	---	---	---	---	---	---	---	---	---	---	---	---	---
2-Methylphenol {J}	ug/Kg	---	---	---	---	---	---	---	---	---	---	---	---	---	---	---
4-Methylphenol {J}	ug/Kg	---	---	---	---	---	---	---	---	---	---	---	---	---	---	---
Naphthalene	ug/Kg	---	---	---	---	---	---	---	---	---	---	---	---	---	---	---
2-Nitroaniline	ug/Kg	---	---	---	---	---	---	---	---	---	---	---	---	---	---	---
3-Nitroaniline	ug/Kg	---	---	---	---	---	---	---	---	---	---	---	---	---	---	---
4-Nitroaniline	ug/Kg	---	---	---	---	---	---	---	---	---	---	---	---	---	---	---
Nitrobenzene {I}	ug/Kg	---	---	---	---	---	---	---	---	---	---	---	---	---	---	---
2-Nitrophenol	ug/Kg	---	---	---	---	---	---	---	---	---	---	---	---	---	---	---
4-Nitrophenol	ug/Kg	---	---	---	---	---	---	---	---	---	---	---	---	---	---	---
n-Nitroso-di-n-propylamine	ug/Kg	---	---	---	---	---	---	---	---	---	---	---	---	---	---	---
N-Nitrosodiphenylamine	ug/Kg	---	---	---	---	---	---	---	---	---	---	---	---	---	---	---
Pentachlorophenol	ug/Kg	---	---	---	---	---	---	---	---	---	---	---	---	---	---	---
Phenanthrene	ug/Kg	---	---	---	---	---	---	---	---	---	---	---	---	---	---	---
Phenol	ug/Kg	---	---	---	---	---	---	---	---	---	---	---	---	---	---	---
Pyrene	ug/Kg	---	---	---	---	---	---	---	---	---	---	---	---	---	---	---
1,2,4-Trichlorobenzene	ug/Kg	---	---	---	---	---	---	---	---	---	---	---	---	---	---	---
2,4,5-Trichlorophenol	ug/Kg	---	---	---	---	---	---	---	---	---	---	---	---	---	---	---
2,4,6-Trichlorophenol	ug/Kg	---	---	---	---	---	---	---	---	---	---	---	---	---	---	---
Volatiles	Units															
Acetone {I}	ug/Kg	---	---	---	---	---	---	---	---	---	---	---	---	---	---	---
Benzene {I}	ug/Kg	---	---	---	---	---	---	---	---	---	---	---	---	---	---	---
Bromodichloromethane	ug/Kg	---	---	---	---	---	---	---	---	---	---	---	---	---	---	---

Table 1
Summary of Soil Analytical Results
Dunton Park Property
Holland, Michigan

Sample Location		SB-DP-17	SB-DP-17	SB-DP-17	SB-DP-17	SB-DP-18	SB-DP-18	SB-DP-19	SB-DP-19	SB-DP-19	SB-DP-20	SB-DP-20	SB-DP-21	SB-DP-21	SB-DP-22	SB-DP-22
Lab Sample ID		0311364-04	0311364-05	0311364-06	0311364-07	0311364-08	0311364-09	0311364-10	0311364-11	0311364-12	0312045-01	0312045-02	0311364-19	0311364-20	0311364-13	0311364-14
Sampled By		Horizon	Horizon	Horizon	Horizon	Horizon	Horizon	Horizon	Horizon	Horizon	Horizon	Horizon	Horizon	Horizon	Horizon	Horizon
Analyzed By		e-Lab	e-Lab	e-Lab	e-Lab	e-Lab	e-Lab	e-Lab	e-Lab	e-Lab	e-Lab	e-Lab	e-Lab	e-Lab	e-Lab	e-Lab
Sample Date		11/26/2003	11/26/2003	11/26/2003	11/26/2003	11/26/2003	11/26/2003	11/26/2003	11/26/2003	11/26/2003	12/2/2003	12/2/2003	11/26/2003	11/26/2003	11/26/2003	11/26/2003
Sample Depth (ft.)		1.7'-2.7'	3.5'-4.1'	6'-7'	8'-8.5'	7'-8'	10'-11'	0'-1'	7.5'-8'	8'-9'	0'-1'	2'-3'	6'-7'	9'-10'	0'-0.4'	2'-3'
Soil Type:		clay	organic clay	clay	peat	organic clay	peat	top soil	organic clay	peat	top soil	clay	organic clay	peat	top soil	clay
Volatiles Cont.	Units															
Bromoform	ug/Kg	---	---	---	---	---	---	---	---	---	---	---	---	---	---	---
Bromomethane	ug/Kg	---	---	---	---	---	---	---	---	---	---	---	---	---	---	---
2-Butanone (MEK) {I}	ug/Kg	---	---	---	---	---	---	---	---	---	---	---	---	---	---	---
Carbon disulfide {I,R}	ug/Kg	---	---	---	---	---	---	---	---	---	---	---	---	---	---	---
Carbon tetrachloride	ug/Kg	---	---	---	---	---	---	---	---	---	---	---	---	---	---	---
Chlorobenzene {I}	ug/Kg	<46	<58	**330**	**500**	**730**	**29000**	<46	<190	<290	<49	<64	<81	<370	<47	<48
Chloroethane {I}	ug/Kg	---	---	---	---	---	---	---	---	---	---	---	---	---	---	---
Chloroform	ug/Kg	---	---	---	---	---	---	---	---	---	---	---	---	---	---	---
Chloromethane {I}	ug/Kg	---	---	---	---	---	---	---	---	---	---	---	---	---	---	---
Dibromochloromethane	ug/Kg	---	---	---	---	---	---	---	---	---	---	---	---	---	---	---
1,1-Dichloroethane {I}	ug/Kg	---	---	---	---	---	---	---	---	---	---	---	---	---	---	---
1,2-Dichloroethane {I}	ug/Kg	---	---	---	---	---	---	---	---	---	---	---	---	---	---	---
1,1-Dichloroethylene {I}	ug/Kg	---	---	---	---	---	---	---	---	---	---	---	---	---	---	---
cis-1,2-Dichloroethylene {I}	ug/Kg	---	---	---	---	---	---	---	---	---	---	---	---	---	---	---
trans-1,2-Dichloroethylene	ug/Kg	---	---	---	---	---	---	---	---	---	---	---	---	---	---	---
1,2-Dichloroethylene {I} Total	ug/Kg	---	---	---	---	---	---	---	---	---	---	---	---	---	---	---
1,2-Dichloropropane {I}	ug/Kg	---	---	---	---	---	---	---	---	---	---	---	---	---	---	---
cis-1,3-Dichloropropene {I,J}	ug/Kg	---	---	---	---	---	---	---	---	---	---	---	---	---	---	---
trans-1,3-Dichloropropene {I, J}	ug/Kg	---	---	---	---	---	---	---	---	---	---	---	---	---	---	---
1,3-Dichloropropene Total	ug/Kg	---	---	---	---	---	---	---	---	---	---	---	---	---	---	---
Ethylbenzene {I}	ug/Kg	---	---	---	---	---	---	---	---	---	---	---	---	---	---	---
2-Hexanone {I}	ug/Kg	---	---	---	---	---	---	---	---	---	---	---	---	---	---	---
4-Methyl-2-pentanone (MIBK) {I}	ug/Kg	---	---	---	---	---	---	---	---	---	---	---	---	---	---	---
Methylene chloride	ug/Kg	---	---	---	---	---	---	---	---	---	---	---	---	---	---	---
Styrene {I}	ug/Kg	---	---	---	---	---	---	---	---	---	---	---	---	---	---	---
1,1,2,2-Tetrachloroethane	ug/Kg	---	---	---	---	---	---	---	---	---	---	---	---	---	---	---
Tetrachloroethylene	ug/Kg	---	---	---	---	---	---	---	---	---	---	---	---	---	---	---
Toluene {I}	ug/Kg	---	---	---	---	---	---	---	---	---	---	---	---	---	---	---
1,1,1-Trichloroethane	ug/Kg	---	---	---	---	---	---	---	---	---	---	---	---	---	---	---
1,1,2-Trichloroethane	ug/Kg	---	---	---	---	---	---	---	---	---	---	---	---	---	---	---
Trichloroethylene	ug/Kg	---	---	---	---	---	---	---	---	---	---	---	---	---	---	---
Vinyl chloride	ug/Kg	---	---	---	---	---	---	---	---	---	---	---	---	---	---	---
Xylene, o	ug/Kg	---	---	---	---	---	---	---	---	---	---	---	---	---	---	---
Xylene, p&m	ug/Kg	---	---	---	---	---	---	---	---	---	---	---	---	---	---	---
Xylene (Total)	ug/Kg	---	---	---	---	---	---	---	---	---	---	---	---	---	---	---

Table 1
Summary of Soil Analytical Results
Dunton Park Property
Holland, Michigan

Sample Location		SB-DP-22	SB-DP-22	SB-DP-23	SB-DP-23	SB-DP-24	SB-DP-24	SB-DP-24	SB-DP-25	SB-DP-25	SB-DP-25	SB-DP-26	SB-DP-27	SB-DP-27	SB-DP-28	SB-DP-28
Lab Sample ID		0311364-15	0311364-16	0312045-03	0312045-04	0312045-05	0312045-06	0312045-07	0312291-01	0311364-17	0311364-18	0312291-02	0312291-03	0312291-04	0312291-05	0312291-06
Sampled By		Horizon	Horizon	Horizon	Horizon	Horizon	Horizon	Horizon	Horizon	Horizon	Horizon	Horizon	Horizon	Horizon	Horizon	Horizon
Analyzed By		e-Lab	e-Lab	e-Lab	e-Lab	e-Lab	e-Lab	e-Lab	e-Lab	e-Lab	e-Lab	e-Lab	e-Lab	e-Lab	e-Lab	e-Lab
Sample Date		11/26/2003	11/26/2003	12/2/2003	12/2/2003	12/2/2003	12/2/2003	12/2/2003	12/19/2003	11/26/2003	11/26/2003	12/19/2003	12/19/2003	12/19/2003	12/19/2003	12/19/2003
Sample Depth (ft.)		6'-7'	7.5'-8'	3'-3.9'	5'-6'	0'-1'	4'-5'	5'-5.7'	0-0.5	7'-7.9'	8'-9'	3.5-4.0	0-0.5	2.0-2.5	0-0.5	5.0-5.5
Soil Type:		clay	peat	clay	peat	top soil	organic clay	peat	top soil	organic clay	peat	sand	top soil	sand & peat	sand	peat
Inorganics	Units															
Arsenic {B}	mg/Kg	---	---	---	---	---	---	---	---	---	---	---	---	---	---	---
Chromium, Total	mg/Kg	---	---	---	---	---	---	---	---	---	---	---	---	---	---	---
Copper {B}	mg/Kg	---	---	---	---	---	---	---	---	---	---	---	---	---	---	---
Mercury (Inorganic) {B}	mg/Kg	---	---	---	---	---	---	---	---	---	---	---	---	---	---	---
Selenium {B}	mg/Kg	---	---	---	---	---	---	---	---	---	---	---	---	---	---	---
Silver {B}	mg/Kg	---	---	---	---	---	---	---	---	---	---	---	---	---	---	---
Misc.	Units															
Percent Moisture	%	**45**	**67**	**35**	**78**	**12**	**51**	**57**	**37**	**50**	**84**	**6.6**	**39**	**12**	**13**	**85**
PCB's	Units															
Aroclor 1016	ug/Kg	<330	<330	<330	<330	<330	<330	<330	<330	<330	<330	<330	<330	<330	<330	<330
Aroclor 1221	ug/Kg	<330	<330	<330	<330	<330	<330	<330	<330	<330	<330	<330	<330	<330	<330	<330
Aroclor 1232	ug/Kg	<330	<330	<330	<330	<330	<330	<330	<330	<330	<330	<330	<330	<330	<330	<330
Aroclor 1242	ug/Kg	<330	<330	<330	<330	<330	<330	<330	<330	<330	<330	<330	<330	<330	<330	<330
Aroclor 1248	ug/Kg	<330	<330	<330	<330	<330	**2500**	<330	<330	<330	<330	<330	<330	<330	<330	<330
Aroclor 1254	ug/Kg	<330	<330	<330	<330	<330	<330	<330	<330	<330	<330	<330	<330	<330	<330	<330
Aroclor 1260	ug/Kg	<330	<330	<330	<330	<330	<330	<330	<330	<330	<330	<330	<330	<330	<330	<330
Semi-Volatiles	Units															
Acenaphthene	ug/Kg	---	---	---	---	---	---	---	---	---	---	---	---	---	---	---
Acenaphthylene	ug/Kg	---	---	---	---	---	---	---	---	---	---	---	---	---	---	---
Aniline {I}	ug/Kg	---	---	---	---	---	---	---	---	---	---	---	---	---	---	---
Anthracene	ug/Kg	---	---	---	---	---	---	---	---	---	---	---	---	---	---	---
Benzo(a)anthracene {Q}	ug/Kg	---	---	---	---	---	---	---	---	---	---	---	---	---	---	---
Benzo(a)pyrene {Q}	ug/Kg	---	---	---	---	---	---	---	---	---	---	---	---	---	---	---
Benzo(b)fluoranthene {Q}	ug/Kg	---	---	---	---	---	---	---	---	---	---	---	---	---	---	---
Benzo(g,h,i)perylene	ug/Kg	---	---	---	---	---	---	---	---	---	---	---	---	---	---	---
Benzo(k)fluoranthene {Q}	ug/Kg	---	---	---	---	---	---	---	---	---	---	---	---	---	---	---
Benzophenone	ug/Kg	<890	<1500	<740	<2200	<550	<1000	<1100	<510	<980	<3100	<350	<520	<370	<360	<2200
bis(2-Chloroethoxy)methane	ug/Kg	---	---	---	---	---	---	---	---	---	---	---	---	---	---	---
bis(2-Chloroethyl)ether {I}	ug/Kg	---	---	---	---	---	---	---	---	---	---	---	---	---	---	---
bis(2-Chloroisopropyl)ether	ug/Kg	---	---	---	---	---	---	---	---	---	---	---	---	---	---	---
bis(2-Ethylhexyl)phthalate	ug/Kg	---	---	---	---	---	---	---	---	---	---	---	---	---	---	---
4-Bromo diphenyl ether	ug/Kg	---	---	---	---	---	---	---	---	---	---	---	---	---	---	---
Butyl benzyl phthalate	ug/Kg	---	---	---	---	---	---	---	---	---	---	---	---	---	---	---
Carbazole	ug/Kg	---	---	---	---	---	---	---	---	---	---	---	---	---	---	---
4-Chloro diphenyl ether	ug/Kg	---	---	---	---	---	---	---	---	---	---	---	---	---	---	---
4-Chloro-3-methylphenol	ug/Kg	---	---	---	---	---	---	---	---	---	---	---	---	---	---	---
4-Chloroaniline	ug/Kg	---	---	---	---	---	---	---	---	---	---	---	---	---	---	---
beta-Chloronaphthalene	ug/Kg	---	---	---	---	---	---	---	---	---	---	---	---	---	---	---
2-Chlorophenol	ug/Kg	---	---	---	---	---	---	---	---	---	---	---	---	---	---	---
Chrysene {Q}	ug/Kg	---	---	---	---	---	---	---	---	---	---	---	---	---	---	---
Di-n-butyl phthalate	ug/Kg	---	---	---	---	---	---	---	---	---	---	---	---	---	---	---
Di-n-octyl phthalate	ug/Kg	---	---	---	---	---	---	---	---	---	---	---	---	---	---	---
Dibenzo(a,h)anthracene {Q}	ug/Kg	---	---	---	---	---	---	---	---	---	---	---	---	---	---	---
Dibenzofuran	ug/Kg	---	---	---	---	---	---	---	---	---	---	---	---	---	---	---

Table 1
Summary of Soil Analytical Results
Dunton Park Property
Holland, Michigan

Sample Location		SB-DP-22	SB-DP-22	SB-DP-23	SB-DP-23	SB-DP-24	SB-DP-24	SB-DP-24	SB-DP-25	SB-DP-25	SB-DP-25	SB-DP-26	SB-DP-27	SB-DP-27	SB-DP-28	SB-DP-28
Lab Sample ID		0311364-15	0311364-16	0312045-03	0312045-04	0312045-05	0312045-06	0312045-07	0312291-01	0311364-17	0311364-18	0312291-02	0312291-03	0312291-04	0312291-05	0312291-06
Sampled By		Horizon	Horizon	Horizon	Horizon	Horizon	Horizon	Horizon	Horizon	Horizon	Horizon	Horizon	Horizon	Horizon	Horizon	Horizon
Analyzed By		e-Lab	e-Lab	e-Lab	e-Lab	e-Lab	e-Lab	e-Lab	e-Lab	e-Lab	e-Lab	e-Lab	e-Lab	e-Lab	e-Lab	e-Lab
Sample Date		11/26/2003	11/26/2003	12/2/2003	12/2/2003	12/2/2003	12/2/2003	12/2/2003	12/19/2003	11/26/2003	11/26/2003	12/19/2003	12/19/2003	12/19/2003	12/19/2003	12/19/2003
Sample Depth (ft.)		6'-7'	7.5'-8'	3'-3.9'	5'-6'	0'-1'	4'-5'	5'-5.7'	0-0.5	7'-7.9'	8'-9'	3.5-4.0	0-0.5	2.0-2.5	0-0.5	5.0-5.5
Soil Type:		clay	peat	clay	peat	top soil	organic clay	peat	top soil	organic clay	peat	sand	top soil	sand & peat	sand	peat
Semi-Volatiles Cont.	Units															
1,2-Dichlorobenzene	ug/Kg	---	---	---	---	---	---	---	---	---	---	---	---	---	---	---
1,3-Dichlorobenzene	ug/Kg	---	---	---	---	---	---	---	---	---	---	---	---	---	---	---
1,4-Dichlorobenzene	ug/Kg	---	---	---	---	---	---	---	---	---	---	---	---	---	---	---
3,3'-Dichlorobenzidine	ug/Kg	---	---	---	---	---	---	---	---	---	---	---	---	---	---	---
2,4-Dichlorophenol	ug/Kg	---	---	---	---	---	---	---	---	---	---	---	---	---	---	---
Diethyl phthalate	ug/Kg	---	---	---	---	---	---	---	---	---	---	---	---	---	---	---
Dimethyl phthalate	ug/Kg	---	---	---	---	---	---	---	---	---	---	---	---	---	---	---
2,4-Dimethylphenol	ug/Kg	---	---	---	---	---	---	---	---	---	---	---	---	---	---	---
2,4-Dinitrophenol	ug/Kg	---	---	---	---	---	---	---	---	---	---	---	---	---	---	---
2,4-Dinitrotoluene	ug/Kg	---	---	---	---	---	---	---	---	---	---	---	---	---	---	---
2,6-Dinitrotoluene	ug/Kg	---	---	---	---	---	---	---	---	---	---	---	---	---	---	---
5,5-Diphenylhydantoin	ug/Kg	**1500**	**16000**	<600	**15000**	<600	**720**	**4900**	<600	<620	<1900	<600	<600	<600	<600	<1400
Fluoranthene	ug/Kg	---	---	---	---	---	---	---	---	---	---	---	---	---	---	---
Fluorene	ug/Kg	---	---	---	---	---	---	---	---	---	---	---	---	---	---	---
Hexachlorobenzene (C-66)	ug/Kg	---	---	---	---	---	---	---	---	---	---	---	---	---	---	---
Hexachlorobutadiene (C-46)	ug/Kg	---	---	---	---	---	---	---	---	---	---	---	---	---	---	---
Hexachlorocyclopentadiene (C-56)	ug/Kg	---	---	---	---	---	---	---	---	---	---	---	---	---	---	---
Hexachloroethane	ug/Kg	---	---	---	---	---	---	---	---	---	---	---	---	---	---	---
Indeno(1,2,3-cd)pyrene {Q}	ug/Kg	---	---	---	---	---	---	---	---	---	---	---	---	---	---	---
Isophorone	ug/Kg	---	---	---	---	---	---	---	---	---	---	---	---	---	---	---
2-Methyl-4,6-dinitrophenol	ug/Kg	---	---	---	---	---	---	---	---	---	---	---	---	---	---	---
2-Methylnaphthalene	ug/Kg	---	---	---	---	---	---	---	---	---	---	---	---	---	---	---
2-Methylphenol {J}	ug/Kg	---	---	---	---	---	---	---	---	---	---	---	---	---	---	---
4-Methylphenol {J}	ug/Kg	---	---	---	---	---	---	---	---	---	---	---	---	---	---	---
Naphthalene	ug/Kg	---	---	---	---	---	---	---	---	---	---	---	---	---	---	---
2-Nitroaniline	ug/Kg	---	---	---	---	---	---	---	---	---	---	---	---	---	---	---
3-Nitroaniline	ug/Kg	---	---	---	---	---	---	---	---	---	---	---	---	---	---	---
4-Nitroaniline	ug/Kg	---	---	---	---	---	---	---	---	---	---	---	---	---	---	---
Nitrobenzene {I}	ug/Kg	---	---	---	---	---	---	---	---	---	---	---	---	---	---	---
2-Nitrophenol	ug/Kg	---	---	---	---	---	---	---	---	---	---	---	---	---	---	---
4-Nitrophenol	ug/Kg	---	---	---	---	---	---	---	---	---	---	---	---	---	---	---
n-Nitroso-di-n-propylamine	ug/Kg	---	---	---	---	---	---	---	---	---	---	---	---	---	---	---
N-Nitrosodiphenylamine	ug/Kg	---	---	---	---	---	---	---	---	---	---	---	---	---	---	---
Pentachlorophenol	ug/Kg	---	---	---	---	---	---	---	---	---	---	---	---	---	---	---
Phenanthrene	ug/Kg	---	---	---	---	---	---	---	---	---	---	---	---	---	---	---
Phenol	ug/Kg	---	---	---	---	---	---	---	---	---	---	---	---	---	---	---
Pyrene	ug/Kg	---	---	---	---	---	---	---	---	---	---	---	---	---	---	---
1,2,4-Trichlorobenzene	ug/Kg	---	---	---	---	---	---	---	---	---	---	---	---	---	---	---
2,4,5-Trichlorophenol	ug/Kg	---	---	---	---	---	---	---	---	---	---	---	---	---	---	---
2,4,6-Trichlorophenol	ug/Kg	---	---	---	---	---	---	---	---	---	---	---	---	---	---	---
Volatiles	Units															
Acetone {I}	ug/Kg	---	---	---	---	---	---	---	---	---	---	---	---	---	---	---
Benzene {I}	ug/Kg	---	---	---	---	---	---	---	---	---	---	---	---	---	---	---
Bromodichloromethane	ug/Kg	---	---	---	---	---	---	---	---	---	---	---	---	---	---	---

Table 1
Summary of Soil Analytical Results
Dunton Park Property
Holland, Michigan

Sample Location		SB-DP-22	SB-DP-22	SB-DP-23	SB-DP-23	SB-DP-24	SB-DP-24	SB-DP-24	SB-DP-25	SB-DP-25	SB-DP-25	SB-DP-26	SB-DP-27	SB-DP-27	SB-DP-28	SB-DP-28
Lab Sample ID		0311364-15	0311364-16	0312045-03	0312045-04	0312045-05	0312045-06	0312045-07	0312291-01	0311364-17	0311364-18	0312291-02	0312291-03	0312291-04	0312291-05	0312291-06
Sampled By		Horizon	Horizon	Horizon	Horizon	Horizon	Horizon	Horizon	Horizon	Horizon	Horizon	Horizon	Horizon	Horizon	Horizon	Horizon
Analyzed By		e-Lab	e-Lab	e-Lab	e-Lab	e-Lab	e-Lab	e-Lab	e-Lab	e-Lab	e-Lab	e-Lab	e-Lab	e-Lab	e-Lab	e-Lab
Sample Date		11/26/2003	11/26/2003	12/2/2003	12/2/2003	12/2/2003	12/2/2003	12/2/2003	12/19/2003	11/26/2003	11/26/2003	12/19/2003	12/19/2003	12/19/2003	12/19/2003	12/19/2003
Sample Depth (ft.)		6'-7'	7.5'-8'	3'-3.9'	5'-6'	0'-1'	4'-5'	5'-5.7'	0-0.5	7'-7.9'	8'-9'	3.5-4.0	0-0.5	2.0-2.5	0-0.5	5.0-5.5
Soil Type:		clay	peat	clay	peat	top soil	organic clay	peat	top soil	organic clay	peat	sand	top soil	sand & peat	sand	peat
Volatiles Cont.	Units															
Bromoform	ug/Kg	---	---	---	---	---	---	---	---	---	---	---	---	---	---	---
Bromomethane	ug/Kg	---	---	---	---	---	---	---	---	---	---	---	---	---	---	---
2-Butanone (MEK) {I}	ug/Kg	---	---	---	---	---	---	---	---	---	---	---	---	---	---	---
Carbon disulfide {I,R}	ug/Kg	---	---	---	---	---	---	---	---	---	---	---	---	---	---	---
Carbon tetrachloride	ug/Kg	---	---	---	---	---	---	---	---	---	---	---	---	---	---	---
Chlorobenzene {I}	ug/Kg	<75	<170	<61	**340**	<45	**350**	**710**	**83**	**130**	<450	<43	<71	<48	<46	<380
Chloroethane {I}	ug/Kg	---	---	---	---	---	---	---	---	---	---	---	---	---	---	---
Chloroform	ug/Kg	---	---	---	---	---	---	---	---	---	---	---	---	---	---	---
Chloromethane {I}	ug/Kg	---	---	---	---	---	---	---	---	---	---	---	---	---	---	---
Dibromochloromethane	ug/Kg	---	---	---	---	---	---	---	---	---	---	---	---	---	---	---
1,1-Dichloroethane {I}	ug/Kg	---	---	---	---	---	---	---	---	---	---	---	---	---	---	---
1,2-Dichloroethane {I}	ug/Kg	---	---	---	---	---	---	---	---	---	---	---	---	---	---	---
1,1-Dichloroethylene {I}	ug/Kg	---	---	---	---	---	---	---	---	---	---	---	---	---	---	---
cis-1,2-Dichloroethylene {I}	ug/Kg	---	---	---	---	---	---	---	---	---	---	---	---	---	---	---
trans-1,2-Dichloroethylene	ug/Kg	---	---	---	---	---	---	---	---	---	---	---	---	---	---	---
1,2-Dichloroethylene {I} Total	ug/Kg	---	---	---	---	---	---	---	---	---	---	---	---	---	---	---
1,2-Dichloropropane {I}	ug/Kg	---	---	---	---	---	---	---	---	---	---	---	---	---	---	---
cis-1,3-Dichloropropene {I,J}	ug/Kg	---	---	---	---	---	---	---	---	---	---	---	---	---	---	---
trans-1,3-Dichloropropene {I, J}	ug/Kg	---	---	---	---	---	---	---	---	---	---	---	---	---	---	---
1,3-Dichloropropene Total	ug/Kg	---	---	---	---	---	---	---	---	---	---	---	---	---	---	---
Ethylbenzene {I}	ug/Kg	---	---	---	---	---	---	---	---	---	---	---	---	---	---	---
2-Hexanone {I}	ug/Kg	---	---	---	---	---	---	---	---	---	---	---	---	---	---	---
4-Methyl-2-pentanone (MIBK) {I}	ug/Kg	---	---	---	---	---	---	---	---	---	---	---	---	---	---	---
Methylene chloride	ug/Kg	---	---	---	---	---	---	---	---	---	---	---	---	---	---	---
Styrene {I}	ug/Kg	---	---	---	---	---	---	---	---	---	---	---	---	---	---	---
1,1,2,2-Tetrachloroethane	ug/Kg	---	---	---	---	---	---	---	---	---	---	---	---	---	---	---
Tetrachloroethylene	ug/Kg	---	---	---	---	---	---	---	---	---	---	---	---	---	---	---
Toluene {I}	ug/Kg	---	---	---	---	---	---	---	---	---	---	---	---	---	---	---
1,1,1-Trichloroethane	ug/Kg	---	---	---	---	---	---	---	---	---	---	---	---	---	---	---
1,1,2-Trichloroethane	ug/Kg	---	---	---	---	---	---	---	---	---	---	---	---	---	---	---
Trichloroethylene	ug/Kg	---	---	---	---	---	---	---	---	---	---	---	---	---	---	---
Vinyl chloride	ug/Kg	---	---	---	---	---	---	---	---	---	---	---	---	---	---	---
Xylene, o	ug/Kg	---	---	---	---	---	---	---	---	---	---	---	---	---	---	---
Xylene, p&m	ug/Kg	---	---	---	---	---	---	---	---	---	---	---	---	---	---	---
Xylene (Total)	ug/Kg	---	---	---	---	---	---	---	---	---	---	---	---	---	---	---

Table 1
Summary of Soil Analytical Results
Dunton Park Property
Holland, Michigan

Sample Location		SB-DP-29	SB-DP-29	SB-DP-30	SB-DP-30
Lab Sample ID		0312291-07	0312291-08	0312291-09	0312291-10
Sampled By		Horizon	Horizon	Horizon	Horizon
Analyzed By		e-Lab	e-Lab	e-Lab	e-Lab
Sample Date		12/19/2003	12/19/2003	12/19/2003	12/19/2003
Sample Depth (ft.)		0-0.5	1.0-1.5'	0-0.5	3.5-4.0
Soil Type:		top soil	sand	top soil	sand
Inorganics	Units				
Arsenic {B}	mg/Kg	---	---	---	---
Chromium, Total	mg/Kg	---	---	---	---
Copper {B}	mg/Kg	---	---	---	---
Mercury (Inorganic) {B}	mg/Kg	---	---	---	---
Selenium {B}	mg/Kg	---	---	---	---
Silver {B}	mg/Kg	---	---	---	---
Misc.	Units				
Percent Moisture	%	**41**	**13**	**12**	**5.3**
PCB's	Units				
Aroclor 1016	ug/Kg	<330	<330	<330	<330
Aroclor 1221	ug/Kg	<330	<330	<330	<330
Aroclor 1232	ug/Kg	<330	<330	<330	<330
Aroclor 1242	ug/Kg	<330	<330	<330	<330
Aroclor 1248	ug/Kg	<330	<330	<330	<330
Aroclor 1254	ug/Kg	<330	<330	<330	<330
Aroclor 1260	ug/Kg	<330	<330	<330	<330
Semi-Volatiles	Units				
Acenaphthene	ug/Kg	---	---	---	---
Acenaphthylene	ug/Kg	---	---	---	---
Aniline {I}	ug/Kg	---	---	---	---
Anthracene	ug/Kg	---	---	---	---
Benzo(a)anthracene {Q}	ug/Kg	---	---	---	---
Benzo(a)pyrene {Q}	ug/Kg	---	---	---	---
Benzo(b)fluoranthene {Q}	ug/Kg	---	---	---	---
Benzo(g,h,i)perylene	ug/Kg	---	---	---	---
Benzo(k)fluoranthene {Q}	ug/Kg	---	---	---	---
Benzophenone	ug/Kg	<550	<380	<370	<340
bis(2-Chloroethoxy)methane	ug/Kg	---	---	---	---
bis(2-Chloroethyl)ether {I}	ug/Kg	---	---	---	---
bis(2-Chloroisopropyl)ether	ug/Kg	---	---	---	---
bis(2-Ethylhexyl)phthalate	ug/Kg	---	---	---	---
4-Bromo diphenyl ether	ug/Kg	---	---	---	---
Butyl benzyl phthalate	ug/Kg	---	---	---	---
Carbazole	ug/Kg	---	---	---	---
4-Chloro diphenyl ether	ug/Kg	---	---	---	---
4-Chloro-3-methylphenol	ug/Kg	---	---	---	---
4-Chloroaniline	ug/Kg	---	---	---	---
beta-Chloronaphthalene	ug/Kg	---	---	---	---
2-Chlorophenol	ug/Kg	---	---	---	---
Chrysene {Q}	ug/Kg	---	---	---	---
Di-n-butyl phthalate	ug/Kg	---	---	---	---
Di-n-octyl phthalate	ug/Kg	---	---	---	---
Dibenzo(a,h)anthracene {Q}	ug/Kg	---	---	---	---
Dibenzofuran	ug/Kg	---	---	---	---

Table 1
Summary of Soil Analytical Results
Dunton Park Property
Holland, Michigan

Sample Location		SB-DP-29	SB-DP-29	SB-DP-30	SB-DP-30
Lab Sample ID		0312291-07	0312291-08	0312291-09	0312291-10
Sampled By		Horizon	Horizon	Horizon	Horizon
Analyzed By		e-Lab	e-Lab	e-Lab	e-Lab
Sample Date		12/19/2003	12/19/2003	12/19/2003	12/19/2003
Sample Depth (ft.)		0-0.5	1.0-1.5'	0-0.5	3.5-4.0
Soil Type:		top soil	sand	top soil	sand
Semi-Volatiles Cont.	Units				
1,2-Dichlorobenzene	ug/Kg	---	---	---	---
1,3-Dichlorobenzene	ug/Kg	---	---	---	---
1,4-Dichlorobenzene	ug/Kg	---	---	---	---
3,3'-Dichlorobenzidine	ug/Kg	---	---	---	---
2,4-Dichlorophenol	ug/Kg	---	---	---	---
Diethyl phthalate	ug/Kg	---	---	---	---
Dimethyl phthalate	ug/Kg	---	---	---	---
2,4-Dimethylphenol	ug/Kg	---	---	---	---
2,4-Dinitrophenol	ug/Kg	---	---	---	---
2,4-Dinitrotoluene	ug/Kg	---	---	---	---
2,6-Dinitrotoluene	ug/Kg	---	---	---	---
5,5-Diphenylhydantoin	ug/Kg	<600	<600	<600	<600
Fluoranthene	ug/Kg	---	---	---	---
Fluorene	ug/Kg	---	---	---	---
Hexachlorobenzene (C-66)	ug/Kg	---	---	---	---
Hexachlorobutadiene (C-46)	ug/Kg	---	---	---	---
Hexachlorocyclopentadiene (C-56)	ug/Kg	---	---	---	---
Hexachloroethane	ug/Kg	---	---	---	---
Indeno(1,2,3-cd)pyrene {Q}	ug/Kg	---	---	---	---
Isophorone	ug/Kg	---	---	---	---
2-Methyl-4,6-dinitrophenol	ug/Kg	---	---	---	---
2-Methylnaphthalene	ug/Kg	---	---	---	---
2-Methylphenol {J}	ug/Kg	---	---	---	---
4-Methylphenol {J}	ug/Kg	---	---	---	---
Naphthalene	ug/Kg	---	---	---	---
2-Nitroaniline	ug/Kg	---	---	---	---
3-Nitroaniline	ug/Kg	---	---	---	---
4-Nitroaniline	ug/Kg	---	---	---	---
Nitrobenzene {I}	ug/Kg	---	---	---	---
2-Nitrophenol	ug/Kg	---	---	---	---
4-Nitrophenol	ug/Kg	---	---	---	---
n-Nitroso-di-n-propylamine	ug/Kg	---	---	---	---
N-Nitrosodiphenylamine	ug/Kg	---	---	---	---
Pentachlorophenol	ug/Kg	---	---	---	---
Phenanthrene	ug/Kg	---	---	---	---
Phenol	ug/Kg	---	---	---	---
Pyrene	ug/Kg	---	---	---	---
1,2,4-Trichlorobenzene	ug/Kg	---	---	---	---
2,4,5-Trichlorophenol	ug/Kg	---	---	---	---
2,4,6-Trichlorophenol	ug/Kg	---	---	---	---
Volatiles	Units				
Acetone {I}	ug/Kg	---	---	---	---
Benzene {I}	ug/Kg	---	---	---	---
Bromodichloromethane	ug/Kg	---	---	---	---

Table 1
Summary of Soil Analytical Results
Dunton Park Property
Holland, Michigan

Sample Location		SB-DP-29	SB-DP-29	SB-DP-30	SB-DP-30
Lab Sample ID		0312291-07	0312291-08	0312291-09	0312291-10
Sampled By		Horizon	Horizon	Horizon	Horizon
Analyzed By		e-Lab	e-Lab	e-Lab	e-Lab
Sample Date		12/19/2003	12/19/2003	12/19/2003	12/19/2003
Sample Depth (ft.)		0-0.5	1.0-1.5'	0-0.5	3.5-4.0
Soil Type:		top soil	sand	top soil	sand
Volatiles Cont.	Units				
Bromoform	ug/Kg	---	---	---	---
Bromomethane	ug/Kg	---	---	---	---
2-Butanone (MEK) {I}	ug/Kg	---	---	---	---
Carbon disulfide {I,R}	ug/Kg	---	---	---	---
Carbon tetrachloride	ug/Kg	---	---	---	---
Chlorobenzene {I}	ug/Kg	<76	<47	<46	<42
Chloroethane {I}	ug/Kg	---	---	---	---
Chloroform	ug/Kg	---	---	---	---
Chloromethane {I}	ug/Kg	---	---	---	---
Dibromochloromethane	ug/Kg	---	---	---	---
1,1-Dichloroethane {I}	ug/Kg	---	---	---	---
1,2-Dichloroethane {I}	ug/Kg	---	---	---	---
1,1-Dichloroethylene {I}	ug/Kg	---	---	---	---
cis-1,2-Dichloroethylene {I}	ug/Kg	---	---	---	---
trans-1,2-Dichloroethylene	ug/Kg	---	---	---	---
1,2-Dichloroethylene {I} Total	ug/Kg	---	---	---	---
1,2-Dichloropropane {I}	ug/Kg	---	---	---	---
cis-1,3-Dichloropropene {I,J}	ug/Kg	---	---	---	---
trans-1,3-Dichloropropene {I, J}	ug/Kg	---	---	---	---
1,3-Dichloropropene Total	ug/Kg	---	---	---	---
Ethylbenzene {I}	ug/Kg	---	---	---	---
2-Hexanone {I}	ug/Kg	---	---	---	---
4-Methyl-2-pentanone (MIBK) {I}	ug/Kg	---	---	---	---
Methylene chloride	ug/Kg	---	---	---	---
Styrene {I}	ug/Kg	---	---	---	---
1,1,2,2-Tetrachloroethane	ug/Kg	---	---	---	---
Tetrachloroethylene	ug/Kg	---	---	---	---
Toluene {I}	ug/Kg	---	---	---	---
1,1,1-Trichloroethane	ug/Kg	---	---	---	---
1,1,2-Trichloroethane	ug/Kg	---	---	---	---
Trichloroethylene	ug/Kg	---	---	---	---
Vinyl chloride	ug/Kg	---	---	---	---
Xylene, o	ug/Kg	---	---	---	---
Xylene, p&m	ug/Kg	---	---	---	---
Xylene (Total)	ug/Kg	---	---	---	---

Table 1
Summary of Soil Analytical Results
Dunton Park Property
Holland, Michigan

Footnotes

Criteria from Part 201 RRD Memo, September 28, 2012
» Target Method Detection Limit from MDEQ-ERD Operational Memorandum #2, October 22, 2004

Results Qualifiers:
--- Parameter not analyzed
Bolded value denotes parameter detected above detection limit
Shaded values exceed TMDL and Groundwater Surface Wate Interface Protection Criteria.
Boxes exceed TMDL and Non-Residential Drinking Water Protection Criteria.

Criteria Qualifiers:
{B} Background, may be substituted if higher than cleanup criterion
{C} Value presented is a screening level based on the chemical-specific generic Csat
{D} Calculated criterion exceeds 100% hence is reduced to 100% or 1.0E+9 ppb
{G} Criterion is dependant upon pH and/or hardness value of the receiving source water.
{I} Hazardous substance may exhibit the characteristic of ignitability
{J} Hazardous substance may be present in several isomer forms and shall be added together for comparison to criteria
{M} Calculated criterion is below the analytical TDL
{Q} Criteria for carcinogenic PAHs were developed using RPPs to benzo(a)pyrene
{R} Hazardous substance may exhibit the characteristic of reactivity
{S} Criterion defaults to the chemical-specific water solubility limit
{T} Refer to the TSCA
{U} Hazardous substance may exhibit the characteristic of corrosivity
{V} Criterion is the aesthetic DW value
{W} Concentrations of trihalomethanes in GW must be added together to determine compliance with the MI DW standard of
{X} GSI shown is not protective for surface water that is used as a drinking water source
{Y} Source size modifiers for SIC for Ambient Air.
{Z} The current TDL for mercury is 0.2 ppb, however, a TDL of 5.0E-4 using U.S. EPA Method 1631, will be required after S
{AA} Comparison to these criteria may take into account an evaluation of whether the
substances are adsorbed to particulates rather than dissolved in water
{CC} GSI criteria for unionized ammonia are 29 ug/L and 53 ug/L for coldwater and warmwater streams, respectively
{DD} Hazardous substance causes developmental effects
ID = Inadequate data to develop criterion
IP = Development of generic GSI value in process.
NA = Criterion or value is not available, or not applicable
NLL = Hazardous substance is not likely to leach under most soil conditions
NLV = Hazardous substance is not likely to volatilize under most conditions

Table 2
Summary of Groundwater Analytical Results
Dunton Park Property
Holland, Michigan

Sample Location Lab Sample ID Sampled By Analyzed By Sample Date Sample Depth (Ft.)		Target Method Detection Limit	Non-Residential Drinking Water Criteria	Groundwater Surface Water Interface Criteria	Non-Residential Groundwater Volatilization to Indoor Air Inhalation Criteria	Groundwater Contact Criteria	Final Acute Value Criteria	MW-DP-1 0311347-06 Horizon e-Lab 11/25/2003	MW-DP-1 0401242-01 Horizon e-Lab 1/22/2004	MW-DP-1 0405205-06 Horizon e-Lab 5/12/2004	MW-DP-1 0407439-12 Horizon e-Lab 7/29/2004	MW-DP-1 0410457-01 Horizon e-Lab. 10/22/2004	MW-DP-1 0503339-01 Horizon e-Lab. 3/18/2005	MW-DP-1 0506565-07 Horizon e-Lab. 6/28/2005
Inorganics	*Units*													
Arsenic {B} Total	mg/L	5	0.01 {A}	0.01	NLV	4.3	0.68	<0.001	---	<0.010	---	---	---	---
Barium Total	mg/L	100	2 {A}	1.2 {G,X}	NLV	14000	6.6	---	---	**0.12**	---	---	---	---
Chromium, Total	mg/L	10	0.1 {A}	0.12 {G}	NLV	2.9E+5	2.4	<0.005	---	<0.0050	---	---	---	---
Copper {B} Total	mg/L	4	1 {E}	0.02 {G}	NLV	7400	0.064	<0.025	---	<0.020	---	---	---	---
Mercury, Total {B,Z}	mg/L	0.001	0.002 {A}	0.0000013	0.056 {S}	0.056 {S}	0.0028 D	<0.0002	---	<0.00020	---	---	---	---
Selenium {B} Total	mg/L	5	0.05 {A}	0.005	NLV	970	0.12	<0.005	---	<0.0020	---	---	---	---
Silver {B} Total	mg/L	0.2	0.098	0.0002 {M} :0.00006	NLV	1500	0.0011	<0.0005	---	<0.00050	---	---	---	---
Zinc {B} Total	mg/L	50	5 {E}	0.26 {G}	NLV	110000	0.51	---	---	<0.010	---	---	---	---
Misc.	*Units*													
Biochemical Oxygen Demand	mg/L	NA	NA	NA	NA	NA	NA	---	---	**3.8**	---	---	---	---
Carbonaceous Biochemical Oxygen Demand	mg/L	NA	NA	NA	NA	NA	NA	---	---	<2.0	---	---	---	---
Chemical Oxygen Demand	mg/L	NA	NA	NA	NA	NA	NA	---	---	**28**	---	---	---	---
Nitrogen, Ammonia (total)	mg/L	0.025	10 {N}	{CC}	7100	ID	0.32	---	---	**1.0**	---	---	---	---
Nitrogen, Ammonia, unionized	mg/L	0.025	10 {N}	{CC}	7100	ID	0.32	---	---	**0.07**	---	---	---	---
Nitrogen, Nitrate, total{B,N}	mg/L	0.1	10 {A,N}	ID	NLV	310000	NLS	---	---	---	<0.10	---	---	---
PCB's	*Units*													
Aroclor 1016	ug/L	0.2	0.5 {A}	0.2 {M} :2.6E-5	45 {S}	3.3 {AA}	ID	<0.20	---	---	---	---	---	---
Aroclor 1221	ug/L	0.2	0.5 {A}	0.2 {M} :2.6E-5	45 {S}	3.3 {AA}	ID	<0.20	---	---	---	---	---	---
Aroclor 1232	ug/L	0.2	0.5 {A}	0.2 {M} :2.6E-5	45 {S}	3.3 {AA}	ID	<0.41	---	---	---	---	---	---
Aroclor 1242	ug/L	0.2	0.5 {A}	0.2 {M} :2.6E-5	45 {S}	3.3 {AA}	ID	<0.20	---	---	---	---	---	---
Aroclor 1248	ug/L	0.2	0.5 {A}	0.2 {M} :2.6E-5	45 {S}	3.3 {AA}	ID	<0.20	---	---	---	---	---	---
Aroclor 1254	ug/L	0.2	0.5 {A}	0.2 {M} :2.6E-5	45 {S}	3.3 {AA}	ID	<0.20	---	---	---	---	---	---
Aroclor 1260	ug/L	0.2	0.5 {A}	0.2 {M} :2.6E-5	45 {S}	3.3 {AA}	ID	<0.20	---	---	---	---	---	---
Semi-Volatiles	*Units*													
Acenaphthene	ug/L	5	3800	38	4200 {S}	4200 {S}	200	<5.0	<5.0	<5.0	<5.0	<5.0	<5.0	<5.3
Acenaphthylene	ug/L	5	150	ID	3900 {S}	3900 {S}	ID	<5.0	<5.0	<5.0	<5.0	<5.0	<5.0	<5.3
Aniline {I}	ug/L	4	220	4.0	NLV	1.4E+5	36	<20	<20	<20	<20	<20	<4.0	<4.2
Anthracene	ug/L	5	43 {S}	ID	43 {S}	43 {S}	ID	<5.0	<5.0	<5.0	<5.0	<5.0	<5.0	<5.3
Benzo(a)anthracene {Q}	ug/L	1	8.5	ID	NLV	9.4 {S,AA}	ID	<5.0	<1.0	<5.0	<1.0	<1.0	<1.0	<1.1
Benzo(a)pyrene {Q}	ug/L	1	5.0 {A}	ID	NLV	1.0 {M,AA} :0.64	ID	<5.0	<2.0	<5.0	<2.0	<2.0	<1.0	<1.1
Benzo(b)fluoranthene {Q}	ug/L	1	1.5 {S,AA}	ID	ID	1.5 {S,AA}	ID	<5.0	<2.0	<5.0	<2.0	<2.0	<1.0	<1.1
Benzo(g,h,i)perylene	ug/L	1	1.0 {M} :0.26 {S}	ID	NLV	1.0 {M,AA} :0.26 {S}	ID	<5.0	<5.0	<5.0	<5.0	<5.0	<1.0	<1.1
Benzo(k)fluoranthene {Q}	ug/L	1	1.0 {M} :0.8 {S}	NA	NLV	1.0 {M,AA} :0.8 {S}	NA	<5.0	<5.0	<5.0	<5.0	<5.0	<1.0	<1.1
Benzophenone	ug/L	NA	NA	NA	NA	NA	NA	<30	<50	<50	<50	<50	<50	<53
bis(2-Chloroethoxy)methane	ug/L	5	NA	NA	NA	NA	NA	<5.0	<5.0	<5.0	<5.0	<5.0	<5.0	<5.3
bis(2-Chloroethyl)ether {I}	ug/L	1	8.3	1.0 {M}: 0.79	2.1E+5	5700	ID	<5.0	<1.0	<5.0	<1.0	<1.0	<1.0	<1.1
bis(2-Chloroisopropyl)ether	ug/L	5	NA	NA	NA	NA	ID	<5.0	<5.0	<5.0	<5.0	<5.0	<5.0	<5.3
bis(2-Ethylhexyl)phthalate	ug/L	5	6.0 {A}	25	NLV	320 {AA}	285	<5.0	<5.0	<5.0	<5.0	<5.0	**5.0**	<5.3
4-Bromo diphenyl ether	ug/L	5	NA	NA	NA	NA	NA	<5.0	<5.0	<5.0	<5.0	<5.0	<5.0	<5.3
Butyl benzyl phthalate	ug/L	5	2700 {S}	67 {X}	NLV	2700 {S}	630	<5.0	<5.0	<5.0	<5.0	<5.0	<5.0	<5.3
Carbazole	ug/L	10	350	10 {M} :4.0	NLV	7400	72	<10	<10	<10	<10	<10	<10	<11
4-Chloroaniline	ug/L	10	NA	NA	NA	NA	ID	<20	<20	<20	<20	<20	<10	<11

Table 2
Summary of Groundwater Analytical Results
Dunton Park Property
Holland, Michigan

Sample Location Lab Sample ID Sampled By Analyzed By Sample Date Sample Depth (Ft.)		Target Method Detection Limit	Non-Residential Drinking Water Criteria	Groundwater Surface Water Interface Criteria	Non-Residential Groundwater Volatilization to Indoor Air Inhalation Criteria	Groundwater Contact Criteria	Final Acute Value Criteria	MW-DP-1 0311347-06 Horizon e-Lab 11/25/2003	MW-DP-1 0401242-01 Horizon e-Lab 1/22/2004	MW-DP-1 0405205-06 Horizon e-Lab 5/12/2004	MW-DP-1 0407439-12 Horizon e-Lab 7/29/2004	MW-DP-1 0410457-01 Horizon e-Lab. 10/22/2004	MW-DP-1 0503339-01 Horizon e-Lab. 3/18/2005	MW-DP-1 0506565-07 Horizon e-Lab. 6/28/2005
Semi-Volatiles Cont.	*Units*													
4-Chloro-3-methylphenol	ug/L	5	420	7.4	NLV	79000	130	<5.0	<5.0	<5.0	<5.0	<5.0	<5.0	<5.3
beta-Chloronaphthalene	ug/L	5	5200	NA	ID	6700 {S}	NA	<5.0	<5.0	<5.0	<5.0	<5.0	<5.0	<5.3
2-Chlorophenol	ug/L	10	130	18	1.1E+6	94000	320	<5.0	<5.0	<5.0	<5.0	<5.0	<10	<11
4-Chloro diphenyl ether	ug/L	5	NA	NA	NA	NA	NA	<5.0	<5.0	<5.0	<5.0	<5.0	<5.0	<5.3
Chrysene {Q}	ug/L	1	1.6 {S}	ID	ID	1.6 {S,AA}	ID	<5.0	<5.0	<5.0	<5.0	<5.0	<1.0	<1.1
Dibenzo(a,h)anthracene {Q}	ug/L	2	2.0 {M} :0.85	ID	NLV	2.0 {M,AA} :0.31	ID	<5.0	<2.0	<5.0	<2.0	<2.0	<2.0	<2.1
Dibenzofuran	ug/L	4	ID	4.0	10000 {S}	ID	72	<5.0	<5.0	<5.0	<5.0	<5.0	<4.0	<4.2
1,2-Dichlorobenzene	ug/L	1	600 {A}	13	1.6E+5 {S}	1.6E+5 {S}	240	<5.0	<5.0	<5.0	<5.0	<5.0	<1.0	<1.1
1,3-Dichlorobenzene	ug/L	1	19	28	41000	2000	200	<5.0	<5.0	<5.0	<5.0	<5.0	<1.0	<1.1
1,4-Dichlorobenzene	ug/L	1	75 {A}	17	74000 {S}	6400	210	<5.0	<5.0	<5.0	<5.0	<5.0	<1.0	<1.1
3,3'-Dichlorobenzidine	ug/L	0.3	4.3	0.3 {M}:0.2	NLV	180	81	<20	<20	<20	<20	<20	<0.39	<0.41
2,4-Dichlorophenol	ug/L	10	210	11	NLV	48000	180	<10	<10	<10	<10	<10	<10	<11
Diethyl phthalate	ug/L	5	16000	110	NLV	1.1E+6 {S}	2000	<20	<20	<20	<20	<20	<5.0	<5.3
Dimethyl phthalate	ug/L	5	2.1E+5	NA	NLV	4.2E+6 {S}	NA	<20	<20	<20	<20	<20	<5.0	<5.3
2,4-Dimethylphenol	ug/L	5	1000	380	NLV	5.2E+5	2700	<5.0	<5.0	<5.0	<5.0	<5.0	<5.0	<5.3
Di-n-butyl phthalate	ug/L	5	2500	9.7	NLV	11000 {S}	75	<5.0	<5.0	<5.0	<5.0	<5.0	<5.0	<5.3
2,4-Dinitrophenol	ug/L	25	NA	NA	NA	NA	270	<20	<20	<20	<20	<20	<25	<26
2,4-Dinitrotoluene	ug/L	5	32	NA	NLV	8600	NA	<5.0	<5.0	<5.0	<5.0	<5.0	<5.0	<5.3
2,6-Dinitrotoluene	ug/L	5	NA	NA	NA	NA	NA	<5.0	<5.0	<5.0	<5.0	<5.0	<5.0	<5.3
Di-n-octyl phthalate	ug/L	5	380	ID	NLV	400	ID	<5.0	<5.0	<5.0	<5.0	<5.0	<5.0	<5.3
5,5-Diphenylhydantoin	ug/L	NA	68	89 {X}	NLV	14000	2200	**100**	**74**	**60**	**79**	**57**	**130**	**110**
Fluoranthene	ug/L	1	210 {S}	1.6	210 {S}	210 {S}	28	<5.0	<5.0	<5.0	<5.0	<5.0	<1.0	<1.1
Fluorene	ug/L	5	2000 {S}	12	2000 {S}	2000 {S}	220	<5.0	<5.0	<5.0	<5.0	<5.0	<5.0	<5.3
Hexachlorobenzene (C-66)	ug/L	0.2	1.0 {A}	0.2 {M} :0.0003	3000	4.6	ID	<5.0	<5.0	<5.0	<5.0	<5.0	<0.20	<0.21
Hexachlorobutadiene (C-46)	ug/L	0.05	42	0.053	3200 {S}	400	15	<5.0	<5.0	<5.0	<5.0	<5.0	<0.20	<0.21
Hexachlorocyclopentadiene (C-56)	ug/L	5	50 {A}	ID	420	1600	ID	<5.0	<5.0	<5.0	<5.0	<5.0	<5.0	<5.3
Hexachloroethane	ug/L	5	21	6.7 {X}	50000 {S}	1900	210	<5.0	<5.0	<5.0	<5.0	<5.0	<5.0	<5.3
Indeno(1,2,3-cd)pyrene {Q}	ug/L	2	2.0 {M} :0.022 {S}	ID	NLV	2.0 {M} :0.022 {S}	ID	<5.0	<2.0	<5.0	<2.0	<2.0	<2.0	<2.1
Isophorone	ug/L	5	3100	1300 {X}	NLV	9.9E+5	9200	<5.0	<5.0	<5.0	<5.0	<5.0	<5.0	<5.3
2-Methyl-4,6-dinitrophenol	ug/L	20	20 {M} :7.3	NA	NLV	9500	NA	<20	<20	<20	<20	<20	<20	<21
2-Methylnaphthalene	ug/L	5	750	19	25000 {S}	25000 {S}	340	<5.0	<5.0	<5.0	<5.0	<5.0	<5.0	<5.3
2-Methylphenol {J}	ug/L	10	1000	30 {M}: 25	NLV	8.1E+5	1500	<5.0	<5.0	<5.0	<5.0	<5.0	<10	<11
3-Methylphenol {J}	ug/L	10	1000	30 {M}: 25	NLV	8.1E+5	450	---	---	---	---	---	---	---
4-Methylphenol {J}	ug/L	10	1000	30 {M}: 25	NLV	8.1E+5	450	<5.0	<5.0	<5.0	<5.0	<5.0	<10	<11
Naphthalene	ug/L	5	1500	11	31000 {S}	31000 {S}	200	<5.0	<5.0	<5.0	<5.0	<5.0	<5.0	<5.3
2-Nitroaniline	ug/L	25	NA	NA	NA	NA	NA	<20	<20	<20	<20	<20	<25	<26
3-Nitroaniline	ug/L	25	NA	NA	NA	NA	NA	<20	<20	<20	<20	<20	<25	<26
4-Nitroaniline	ug/L	25	NA	NA	NA	NA	NA	<20	<20	<20	<20	<20	<25	<26
Nitrobenzene {I}	ug/L	3	9.6	180 {X}	5.5E+5	11000	2100	<5.0	<2.0	<5.0	<2.0	<2.0	<3.0	<3.2
2-Nitrophenol	ug/L	5	58	ID	NLV	79000	1000	<5.0	<5.0	<5.0	<5.0	<5.0	<5.0	<5.3
4-Nitrophenol	ug/L	25	NA	NA	NA	NA	1900	<20	<20	<20	<20	<20	<25	<26
n-Nitroso-di-n-propylamine	ug/L	5	5.0 {M} :0.77	NA	NLV	360	NA	<5.0	<5.0	<5.0	<5.0	<5.0	<5.0	<5.3

Table 2
Summary of Groundwater Analytical Results
Dunton Park Property
Holland, Michigan

Sample Location Lab Sample ID Sampled By Analyzed By Sample Date Sample Depth (Ft.)		Target Method Detection Limit	Non-Residential Drinking Water Criteria	Groundwater Surface Water Interface Criteria	Non-Residential Groundwater Volatilization to Indoor Air Inhalation Criteria	Groundwater Contact Criteria	Final Acute Value Criteria	MW-DP-1 0311347-06 Horizon e-Lab 11/25/2003	MW-DP-1 0401242-01 Horizon e-Lab 1/22/2004	MW-DP-1 0405205-06 Horizon e-Lab 5/12/2004	MW-DP-1 0407439-12 Horizon e-Lab 7/29/2004	MW-DP-1 0410457-01 Horizon e-Lab. 10/22/2004	MW-DP-1 0503339-01 Horizon e-Lab. 3/18/2005	MW-DP-1 0506565-07 Horizon e-Lab. 6/28/2005
Semi-Volatiles Cont.	*Units*													
N-Nitrosodiphenylamine	ug/L	5	1100	NA	NLV	35000 {S}	NA	<5.0	<5.0	<5.0	<5.0	<5.0	<5.0	<5.3
Pentachlorophenol	ug/L	1	1.0 {A}	{G,X}	NLV	200	Calc.	<20	<20	<20	<20	<20	<2.0	<2.1
Phenanthrene	ug/L	2	150	2.0 {M}: 1.4	1000 {S}	1000 {S}	9.4	<5.0	<5.0	<5.0	<5.0	<5.0	<2.0	<2.1
Phenol	ug/L	5	13000	450	NLV	2.9E+7	6800	<5.0	<5.0	<5.0	<5.0	<5.0	<5.0	<5.3
Pyrene	ug/L	5	140 {S}	ID	140 {S}	140 {S}	ID	<5.0	<5.0	<5.0	<5.0	<5.0	<5.0	<5.3
1,2,4-Trichlorobenzene	ug/L	5	70 {A}	99 {X}	3.0E+5 {S}	19000	850	<5.0	<5.0	<5.0	<5.0	<5.0	<5.0	<5.3
2,4,5-Trichlorophenol	ug/L	5	2100	NA	NLV	1.7E+5	NA	<5.0	<5.0	<5.0	<5.0	<5.0	<5.0	<5.3
2,4,6-Trichlorophenol	ug/L	4	470	5.0	NLV	10000	79	<5.0	<4.0	<5.0	<4.0	<4.0	<4.0	<4.2
Volatiles	*Units*													
Acetone {I}	ug/L	50	2100	1700	1.0E+9 {D,S}	3.1E+7	30000	<25	<25	<20	<25	<25	<50	<50
Benzene {I}	ug/L	1	5.0 {A}	200 {X}	35000	11000	1900	<1.0	<1.0	<1.0	<1.0	<1.0	<1.0	<1.0
Bromodichloromethane	ug/L	1	80 {A,W}	ID	37000	14000	ID	<1.0	<1.0	<1.0	<1.0	<1.0	<1.0	<1.0
Bromoform	ug/L	1	80 {A,W}	ID	3.1E+6 {S}	1.4E+5	ID	<1.0	<1.0	<1.0	<1.0	<1.0	<1.0	<1.0
Bromomethane	ug/L	5	29	35	9000	70000	640	<1.0	<1.0	<1.0	<1.0	<1.0	<5.0	<5.0
2-Butanone (MEK) {I}	ug/L	25	38000	2200	2.4E+8 {S}	2.4E+8 {S}	40000	<5.0	<5.0	<5.0	<5.0	<5.0	<25	<25
Carbon disulfide {I,R}	ug/L	5	2300	ID	5.5E+5	1.2E+6 {S}	ID	<2.5	<2.5	<2.5	<2.5	<2.5	<5.0	<5.0
Carbon tetrachloride	ug/L	1	5.0 {A}	45 {X}	2400	4600	1400	<1.0	<1.0	<1.0	<1.0	<1.0	<1.0	<1.0
Chlorobenzene {I}	ug/L	1	100 {A}	25	4.7E+5 {S}	86000	450	**4.0**	**1.2**	**2.6**	**1.0**	**2.9**	**3.0**	**1.7**
Chloroethane {I}	ug/L	5	1700	1100 {X}	5.7E+6 {S}	4.4E+5	20000	<1.0	<1.0	<1.0	<1.0	<1.0	<5.0	<5.0
Chloroform	ug/L	1	80 {A,W}	350	1.8E+5	1.5E+5	11000	<1.0	<1.0	<1.0	<1.0	<1.0	<1.0	<1.0
Chloromethane {I}	ug/L	5	1100	ID	45000	4.9E+5	ID	<1.0	<1.0	<1.0	<1.0	<1.0	<5.0	<5.0
Dibromochloromethane	ug/L	5	80 {A,W}	ID	1.1E+5	18000	ID	<1.0	<1.0	<1.0	<1.0	<1.0	<5.0	<5.0
1,1-Dichloroethane {I}	ug/L	1	2500	740	2.3E+6	2.4E+6	13000	<1.0	<1.0	<1.0	<1.0	<1.0	<1.0	<1.0
1,2-Dichloroethane {I}	ug/L	1	5.0 {A}	360 {X}	59000	19000	16000	<1.0	<1.0	<1.0	<1.0	<1.0	<1.0	<1.0
1,1-Dichloroethylene {I}	ug/L	1	7.0 {A}	130	1300	11000	2300	<1.0	<1.0	<1.0	<1.0	<1.0	<1.0	<1.0
cis-1,2-Dichloroethylene {I}	ug/L	1	70 {A}	620	2.1E+5	2.0E+5	11000	<1.0	<1.0	<1.0	<1.0	<1.0	<1.0	<1.0
1,2-Dichloroethene, Total	ug/L	1	70 {A}	620	2.1E+5	2.0E+5	19000	<2.0	<2.0	<2.0	<2.0	<2.0	<1.0	<1.0
trans-1,2-Dichloroethylene	ug/L	1	100 {A}	1500 {X}	2.0E+5	2.2E+5	28000	<1.0	<1.0	<1.0	<1.0	<1.0	<1.0	<1.0
1,2-Dichloropropane {I}	ug/L	1	5.0 {A}	230 {X}	36000	16000	4000	<1.0	<1.0	<1.0	<1.0	<1.0	<1.0	<1.0
cis-1,3-Dichloropropene {I,J}	ug/L	1	35	9.0 {X}	26000	5500	160	<1.0	<1.0	<1.0	<1.0	<1.0	<1.0	<1.0
trans-1,3-Dichloropropene {I, J}	ug/L	1	35	9.0 {X}	26000	5500	160	<1.0	<1.0	<1.0	<1.0	<1.0	<1.0	<1.0
total-1,3-Dichloropropene {I, J}	ug/L	1	35	9.0 {X}	26000	5500	160	<2.0	<2.0	<2.0	<2.0	<2.0	<1.0	<1.0
Ethylbenzene {I}	ug/L	1	74 {E}	18	1.7E+5 {S}	1.7E+5 {S}	320	<1.0	<1.0	<1.0	<1.0	<1.0	<1.0	<1.0
2-Hexanone {I}	ug/L	50	2900	ID	8.7E+6	5.2E+6	ID	<50	<50	<5.0	<50	<50	<50	<50
Methylene chloride	ug/L	5	5.0 {A}	1500 {X}	1.4E+6	2.2E+5	17000	<5.0	<5.0	<5.0	<5.0	<5.0	<5.0	<5.0
4-Methyl-2-pentanone (MIBK) {I}	ug/L	50	5200	ID	2.0E+7 {S}	1.3E+7	ID	<50	<50	<5.0	<50	<50	<50	<50
Styrene {I}	ug/L	1	100 {A}	80 {X}	3.1E+5 {S}	9700	2900	<1.0	<1.0	<1.0	<1.0	<1.0	<1.0	<1.0
1,1,2,2-Tetrachloroethane	ug/L	1	35	78 {X}	77000	4700	1800	<1.0	<1.0	<1.0	<1.0	<1.0	<1.0	<1.0
Tetrachloroethylene	ug/L	1	5.0 {A}	60 {X}	1.7E+5	12000	2900	<1.0	<1.0	<1.0	<1.0	<1.0	<1.0	<1.0
Toluene {I}	ug/L	1	790 {E}	270	5.3E+5 {S}	5.3E+5 {S}	2600	<1.0	<1.0	<1.0	<1.0	<1.0	<1.0	<1.0
1,1,1-Trichloroethane	ug/L	1	200 {A}	89	1.3E+6 {S}	1.3E+6 {S}	1600	<1.0	<1.0	<1.0	<1.0	<1.0	<1.0	<1.0
1,1,2-Trichloroethane	ug/L	1	5.0 {A}	330 {X}	1.1E+5	21000	6400	<1.0	<1.0	<1.0	<1.0	<1.0	<1.0	<1.0

Table 2
Summary of Groundwater Analytical Results
Dunton Park Property
Holland, Michigan

Sample Location Lab Sample ID Sampled By Analyzed By Sample Date Sample Depth (Ft.)		Target Method Detection Limit	Non-Residential Drinking Water Criteria	Groundwater Surface Water Interface Criteria	Non-Residential Groundwater Volatilization to Indoor Air Inhalation Criteria	Groundwater Contact Criteria	Final Acute Value Criteria	MW-DP-1 0311347-06 Horizon e-Lab 11/25/2003	MW-DP-1 0401242-01 Horizon e-Lab 1/22/2004	MW-DP-1 0405205-06 Horizon e-Lab 5/12/2004	MW-DP-1 0407439-12 Horizon e-Lab 7/29/2004	MW-DP-1 0410457-01 Horizon e-Lab. 10/22/2004	MW-DP-1 0503339-01 Horizon e-Lab. 3/18/2005	MW-DP-1 0506565-07 Horizon e-Lab. 6/28/2005
Volatiles Cont.	*Units*													
Trichloroethylene	ug/L	1	5.0 {A}	200 {X}	4900	22000	3500	<1.0	<1.0	<1.0	<1.0	<1.0	<1.0	<1.0
Vinyl chloride	ug/L	1	2.0 {A}	13 {X}	13000	1000	17000	<1.0	<1.0	<1.0	<1.0	<1.0	<1.0	<1.0
Xylene, o	ug/L	1	280 {E}	41	1.9E+5 {S}	1.9E+5 {S}	730	<2.0	<2.0	<2.0	<2.0	<2.0	<1.0	<1.0
Xylene, p&m	ug/L	2	280 {E}	41	1.9E+5 {S}	1.9E+5 {S}	730	<1.0	<1.0	<1.0	<1.0	<1.0	<1.0	<1.0
Xylene (Total)	ug/L	3	280 {E}	41	1.9E+5 {S}	1.9E+5 {S}	730	<3.0	<3.0	<3.0	<3.0	<3.0	<3.0	<3.0

Table 2
Summary of Groundwater Analytical Results
Dunton Park Property
Holland, Michigan

Sample Location Lab Sample ID Sampled By Analyzed By Sample Date Sample Depth (Ft.)		MW-DP-1 0512430-03 Horizon e-Lab. 12/21/2005	MW-DP-1 0609569-01 Horizon e-Lab. 9/28/2006	MW-DP-1 0709267-06 Horizon e-Lab 9/13/2007	MW-DP-1 0809275-04 Horizon ALS 9/12/2008	MW-DP-1 0904029-06 Horizon ALS 4/1/2009	MW-DP-1 1002267-04 Horizon ALS 2/15/2010	MW-DP-1 1106436-1 Horizon ALS 6/15/2011	MW-DP-1 Dup 1106436-2 Horizon ALS 6/15/2011	MW-DP-2 0311347-05 Horizon e-Lab 11/25/2003	MW-DP-2 0401242-02 Horizon e-Lab 1/22/2004	MW-DP-2 0405205-05 Horizon e-Lab 5/12/2004	MW-DP-2 0407439-13 Horizon e-Lab 7/29/2004	MW-DP-2 0410457-02 Horizon e-Lab. 10/22/2004	MW-DP-2 0503405-01 Horizon e-Lab. 3/23/2005
Inorganics	*Units*														
Arsenic {B} Total	mg/L	---	---	---	---	---	---	---	---	**0.0018**	---	<0.010	---	---	---
Barium Total	mg/L	---	---	---	---	---	---	---	---	---	---	**0.090**	---	---	---
Chromium, Total	mg/L	---	---	---	---	---	---	---	---	<0.005	---	<0.0050	---	---	---
Copper {B} Total	mg/L	---	---	---	---	---	---	---	---	<0.025	---	<0.020	---	---	---
Mercury, Total {B,Z}	mg/L	---	---	---	---	---	---	---	---	<0.0002	---	<0.00020	---	---	---
Selenium {B} Total	mg/L	---	---	---	---	---	---	---	---	<0.005	---	<0.0020	---	---	---
Silver {B} Total	mg/L	---	---	---	---	---	---	---	---	<0.0005	---	<0.00050	---	---	---
Zinc {B} Total	mg/L	---	---	---	---	---	---	---	---	---	---	<0.010	---	---	---
Misc.	*Units*														
Biochemical Oxygen Demand	mg/L	---	---	---	---	---	---	---	---	---	---	<2.4	---	---	---
Carbonaceous Biochemical Oxygen Demand	mg/L	---	---	---	---	---	---	---	---	---	---	<2.0	---	---	---
Chemical Oxygen Demand	mg/L	---	---	---	---	---	---	---	---	---	---	**12**	---	---	---
Nitrogen, Ammonia (total)	mg/L	---	---	---	---	---	---	---	---	---	---	**0.97**	---	---	---
Nitrogen, Ammonia, unionized	mg/L	---	---	---	---	---	---	---	---	---	---	**0.07**	---	---	---
Nitrogen, Nitrate, total{B,N}	mg/L	---	---	---	---	---	---	---	---	---	---	---	**3.7**	---	---
PCB's	*Units*														
Aroclor 1016	ug/L	---	---	---	---	---	---	---	---	<0.20	---	---	---	---	---
Aroclor 1221	ug/L	---	---	---	---	---	---	---	---	<0.20	---	---	---	---	---
Aroclor 1232	ug/L	---	---	---	---	---	---	---	---	<0.41	---	---	---	---	---
Aroclor 1242	ug/L	---	---	---	---	---	---	---	---	<0.20	---	---	---	---	---
Aroclor 1248	ug/L	---	---	---	---	---	---	---	---	<0.20	---	---	---	---	---
Aroclor 1254	ug/L	---	---	---	---	---	---	---	---	<0.20	---	---	---	---	---
Aroclor 1260	ug/L	---	---	---	---	---	---	---	---	<0.20	---	---	---	---	---
Semi-Volatiles	*Units*														
Acenaphthene	ug/L	<5.0	<5	<5	<5.0	<5.0	<5.0	<5.0	<5.0	<5.0	<5.0	<5.0	<5.0	<5.0	<5.0
Acenaphthylene	ug/L	<5.0	<5	<5	<5.0	<5.0	<5.0	<5.0	<5.0	<5.0	<5.0	<5.0	<5.0	<5.0	<5.0
Aniline {I}	ug/L	<4.0	<4	<4	<20	<4.0	<4.0	<20	<20	<20	<20	<20	<20	<20	<4.0
Anthracene	ug/L	<5.0	<5	<5	<5.0	<5.0	<5.0	<5.0	<5.0	<5.0	<5.0	<5.0	<5.0	<5.0	<5.0
Benzo(a)anthracene {Q}	ug/L	<1.0	<1	<1	<1.0	<1.0	<1.0	<1.0	<1.0	<1.0	<5.0	<5.0	<1.0	<1.0	<1.0
Benzo(a)pyrene {Q}	ug/L	<1.0	<1	<1	<2.0	<1.0	<1.0	<2.0	<2.0	<2.0	<5.0	<5.0	<2.0	<2.0	<1.0
Benzo(b)fluoranthene {Q}	ug/L	<1.0	<1	<1	<2.0	<1.0	<1.0	<2.0	<2.0	<2.0	<5.0	<5.0	<2.0	<2.0	<1.0
Benzo(g,h,i)perylene	ug/L	<1.0	<1	<1	<5.0	<1.0	<1.0	<5.0	<5.0	<5.0	<5.0	<5.0	<5.0	<5.0	<1.0
Benzo(k)fluoranthene {Q}	ug/L	<1.0	<1	<1	<5.0	<1.0	<1.0	<5.0	<5.0	<5.0	<5.0	<5.0	<5.0	<5.0	<1.0
Benzophenone	ug/L	<50	<50	<50	<50	<50	<50	<50	<50	<50	<50	<50	<50	<50	<50
bis(2-Chloroethoxy)methane	ug/L	<5.0	<5	<5	<5.0	<5.0	<5.0	<5.0	<5.0	<5.0	<5.0	<5.0	<5.0	<5.0	<5.0
bis(2-Chloroethyl)ether {I}	ug/L	<1.0	<1	<1	<1.0	<1.0	<1.0	<5.0	<5.0	<1.0	<5.0	<5.0	<1.0	<1.0	<1.0
bis(2-Chloroisopropyl)ether	ug/L	<5.0	<5	<5	<5.0	<5.0	<5.0	<5.0	<5.0	<5.0	<5.0	<5.0	<5.0	<5.0	<5.0
bis(2-Ethylhexyl)phthalate	ug/L	<5.0	<5	<5	<5.0	<5.0	<5.0	<5.0	<5.0	<5.0	<5.0	<5.0	<5.0	<5.0	**5.2 B**
4-Bromo diphenyl ether	ug/L	<5.0	<5	<5	<5.0	<5.0	<5.0	<5.0	<5.0	<5.0	<5.0	<5.0	<5.0	<5.0	<5.0
Butyl benzyl phthalate	ug/L	<5.0	<5	<5	<5.0	<5.0	<5.0	<5.0	<5.0	<5.0	<5.0	<5.0	<5.0	<5.0	<5.0
Carbazole	ug/L	<10	<10	<10	<10	<10	<10	<10	<10	<10	<10	<10	<10	<10	<10
4-Chloroaniline	ug/L	<10	<10	<10	<20	<10	<10	<20	<20	<20	<20	<20	<20	<20	<10

Table 2
Summary of Groundwater Analytical Results
Dunton Park Property
Holland, Michigan

Sample Location		MW-DP-1	MW-DP-1	MW-DP-1	MW-DP-1	MW-DP-1	MW-DP-1	MW-DP-1	MW-DP-1 Dup	MW-DP-2	MW-DP-2	MW-DP-2	MW-DP-2	MW-DP-2	MW-DP-2
Lab Sample ID		0512430-03	0609569-01	0709267-06	0809275-04	0904029-06	1002267-04	1106436-1	1106436-2	0311347-05	0401242-02	0405205-05	0407439-13	0410457-02	0503405-01
Sampled By		Horizon	Horizon	Horizon	Horizon	Horizon	Horizon	Horizon	Horizon	Horizon	Horizon	Horizon	Horizon	Horizon	Horizon
Analyzed By		e-Lab.	e-Lab.	e-Lab	ALS	ALS	ALS	ALS	ALS	e-Lab	e-Lab	e-Lab	e-Lab	e-Lab.	e-Lab.
Sample Date		12/21/2005	9/28/2006	9/13/2007	9/12/2008	4/1/2009	2/15/2010	6/15/2011	6/15/2011	11/25/2003	1/22/2004	5/12/2004	7/29/2004	10/22/2004	3/23/2005
Sample Depth (Ft.)															
Semi-Volatiles Cont.	*Units*														
4-Chloro-3-methylphenol	ug/L	<5.0	<5	<5	<5.0	<5.0	<5.0	<5.0	<5.0	<5.0	<5.0	<5.0	<5.0	<5.0	<5.0
beta-Chloronaphthalene	ug/L	<5.0	<5	<5	<5.0	<5.0	<5.0	<5.0	<5.0	<5.0	<5.0	<5.0	<5.0	<5.0	<5.0
2-Chlorophenol	ug/L	<10	<10	<10	<5.0	<5.0	<5.0	<5.0	<5.0	<5.0	<5.0	<5.0	<5.0	<5.0	<10
4-Chloro diphenyl ether	ug/L	<5.0	<5	<5	<5.0	<5.0	<5.0	<5.0	<5.0	<5.0	<5.0	<5.0	<5.0	<5.0	<5.0
Chrysene {Q}	ug/L	<1.0	<1	<1	<5.0	<1.0	<1.0	<5.0	<5.0	<5.0	<5.0	<5.0	<5.0	<5.0	<1.0
Dibenzo(a,h)anthracene {Q}	ug/L	<2.0	<2	<2	<2.0	<2.0	<2.0	<5.0	<5.0	<2.0	<5.0	<5.0	<2.0	<2.0	<2.0
Dibenzofuran	ug/L	<4.0	<4	<4	<5.0	<4.0	<4.0	<5.0	<5.0	<5.0	<5.0	<5.0	<5.0	<5.0	<4.0
1,2-Dichlorobenzene	ug/L	<1.0	<1	<1	<5.0	<1.0	<1.0	<1.0	<1.0	<5.0	<5.0	<5.0	<5.0	<5.0	<1.0
1,3-Dichlorobenzene	ug/L	<1.0	<1	<1	<5.0	<1.0	<1.0	<1.0	<1.0	<5.0	<5.0	<5.0	<5.0	<5.0	<1.0
1,4-Dichlorobenzene	ug/L	<1.0	<1	<1	<5.0	<1.0	<1.0	<1.0	<1.0	<5.0	<5.0	<5.0	<5.0	<5.0	<1.0
3,3'-Dichlorobenzidine	ug/L	<0.39	<0.39	<0.39	<20	<0.39	<0.39	<0.30	<0.30	<20	<20	<20	<20	<20	<0.39
2,4-Dichlorophenol	ug/L	<10	<10	<10	<10	<10	<10	<10	<10	<10	<10	<10	<10	<10	<10
Diethyl phthalate	ug/L	<5.0	<5	<5	<20	<5.0	<5.0	<5.0	<5.0	<20	<20	<20	<20	<20	<5.0
Dimethyl phthalate	ug/L	<5.0	<5	<5	<20	<5.0	<5.0	<5.0	<5.0	<20	<20	<20	<20	<20	<5.0
2,4-Dimethylphenol	ug/L	<5.0	<5	<5	<5.0	<5.0	<5.0	<5.0	<5.0	<5.0	<5.0	<5.0	<5.0	<5.0	<5.0
Di-n-butyl phthalate	ug/L	<5.0	<5	<5	<5.0	<5.0	<5.0	<5.0	<5.0	<5.0	<5.0	<5.0	<5.0	<5.0	<5.0
2,4-Dinitrophenol	ug/L	<25	<25	<25	<20	<20	<20	<20	<20	<20	<20	<20	<20	<20	<25
2,4-Dinitrotoluene	ug/L	<5.0	<5	<5	<5.0	<5.0	<5.0	<5.0	<5.0	<5.0	<5.0	<5.0	<5.0	<5.0	<5.0
2,6-Dinitrotoluene	ug/L	<5.0	<5	<5	<5.0	<5.0	<5.0	<5.0	<5.0	<5.0	<5.0	<5.0	<5.0	<5.0	<5.0
Di-n-octyl phthalate	ug/L	<5.0	<5	<5	<5.0	<5.0	<5.0	<5.0	<5.0	<5.0	<5.0	<5.0	<5.0	<5.0	<5.0
5,5-Diphenylhydantoin	ug/L	**99**	**58**	**130**	**92**	**60**	**53**	**86**	**99**	**59**	**59**	**77**	**45**	<30	**37**
Fluoranthene	ug/L	<1.0	<1	<1	<5.0	<1.0	<1.0	<5.0	<5.0	<5.0	<5.0	<5.0	<5.0	<5.0	<1.0
Fluorene	ug/L	<5.0	<5	<5	<5.0	<5.0	<5.0	<5.0	<5.0	<5.0	<5.0	<5.0	<5.0	<5.0	<5.0
Hexachlorobenzene (C-66)	ug/L	<0.20	<0.2	<0.2	<5.0	<0.20	<0.20	<5.0	<5.0	<5.0	<5.0	<5.0	<5.0	<5.0	<0.20
Hexachlorobutadiene (C-46)	ug/L	<0.20	<0.3	<0.3	<5.0	<0.30	<0.30	<5.0	<5.0	<5.0	<5.0	<5.0	<5.0	<5.0	<0.20
Hexachlorocyclopentadiene (C-56)	ug/L	<5.0	<5	<5	<5.0	<5.0	<5.0	<5.0	<5.0	<5.0	<5.0	<5.0	<5.0	<5.0	<5.0
Hexachloroethane	ug/L	<5.0	<5	<5	<5.0	<5.0	<5.0	<5.0	<5.0	<5.0	<5.0	<5.0	<5.0	<5.0	<5.0
Indeno(1,2,3-cd)pyrene {Q}	ug/L	<2.0	<2	<2	<2.0	<2.0	<2.0	<2.0	<2.0	<2.0	<5.0	<5.0	<2.0	<2.0	<2.0
Isophorone	ug/L	<5.0	<5	<5	<5.0	<5.0	<5.0	<5.0	<5.0	<5.0	<5.0	<5.0	<5.0	<5.0	<5.0
2-Methyl-4,6-dinitrophenol	ug/L	<5.0	<20	<20	<20	<20	<20	<20	<20	<20	<20	<20	<20	<20	<20
2-Methylnaphthalene	ug/L	<5.0	<5	<5	<5.0	<5.0	<5.0	<5.0	<5.0	<5.0	<5.0	<5.0	<5.0	<5.0	<5.0
2-Methylphenol {J}	ug/L	<10	<10	<10	<5.0	<5.0	<5.0	<5.0	<5.0	<5.0	<5.0	<5.0	<5.0	<5.0	<10
3-Methylphenol {J}	ug/L	---	---	---	---	---	---	---	---	---	---	---	---	---	---
4-Methylphenol {J}	ug/L	<10	<10	<10	<5.0	<5.0	<5.0	<5.0	<5.0	<5.0	<5.0	<5.0	<5.0	<5.0	<10
Naphthalene	ug/L	<5.0	<5	<5	<5.0	<5.0	<5.0	<5.0	<5.0	<5.0	<5.0	<5.0	<5.0	<5.0	<5.0
2-Nitroaniline	ug/L	<25	<25	<25	<20	<20	<20	<20	<20	<20	<20	<20	<20	<20	<25
3-Nitroaniline	ug/L	<25	<25	<25	<20	<20	<20	<20	<20	<20	<20	<20	<20	<20	<25
4-Nitroaniline	ug/L	<25	<25	<25	<20	<20	<20	<20	<20	<20	<20	<20	<20	<20	<25
Nitrobenzene {I}	ug/L	<3.0	<3	<3	<2.0	<2.0	<2.0	<5.0	<5.0	<2.0	<5.0	<5.0	<2.0	<2.0	<3.0
2-Nitrophenol	ug/L	<0.39	<5	<5	<5.0	<5.0	<5.0	<5.0	<5.0	<5.0	<5.0	<5.0	<5.0	<5.0	<5.0
4-Nitrophenol	ug/L	<25	<25	<25	<20	<20	<20	<20	<20	<20	<20	<20	<20	<20	<25
n-Nitroso-di-n-propylamine	ug/L	<5.0	<5	<5	<5.0	<5.0	<5.0	<5.0	<5.0	<5.0	<5.0	<5.0	<5.0	<5.0	<5.0

Table 2
Summary of Groundwater Analytical Results
Dunton Park Property
Holland, Michigan

Sample Location		MW-DP-1	MW-DP-1	MW-DP-1	MW-DP-1	MW-DP-1	MW-DP-1	MW-DP-1	MW-DP-1 Dup	MW-DP-2	MW-DP-2	MW-DP-2	MW-DP-2	MW-DP-2	MW-DP-2
Lab Sample ID		0512430-03	0609569-01	0709267-06	0809275-04	0904029-06	1002267-04	1106436-1	1106436-2	0311347-05	0401242-02	0405205-05	0407439-13	0410457-02	0503405-01
Sampled By		Horizon	Horizon	Horizon	Horizon	Horizon	Horizon	Horizon	Horizon	Horizon	Horizon	Horizon	Horizon	Horizon	Horizon
Analyzed By		e-Lab.	e-Lab.	e-Lab	ALS	ALS	ALS	ALS	ALS	e-Lab	e-Lab	e-Lab	e-Lab	e-Lab.	e-Lab.
Sample Date		12/21/2005	9/28/2006	9/13/2007	9/12/2008	4/1/2009	2/15/2010	6/15/2011	6/15/2011	11/25/2003	1/22/2004	5/12/2004	7/29/2004	10/22/2004	3/23/2005
Sample Depth (Ft.)															
Semi-Volatiles Cont.	*Units*														
N-Nitrosodiphenylamine	ug/L	<5.0	<5	<5	<5.0	<5.0	<5.0	<5.0	<5.0	<5.0	<5.0	<5.0	<5.0	<5.0	<5.0
Pentachlorophenol	ug/L	<2.0	<2	<2	<20	<2.0	<2.0	<20	<20	<20	<20	<20	<20	<20	<2.0
Phenanthrene	ug/L	<2.0	<2	<2	<5.0	<2.0	<2.0	<5.0	<5.0	<5.0	<5.0	<5.0	<5.0	<5.0	<2.0
Phenol	ug/L	<5.0	<5	<5	<5.0	<5.0	<5.0	<5.0	<5.0	<5.0	<5.0	<5.0	<5.0	<5.0	<5.0
Pyrene	ug/L	<5.0	<5	<5	<5.0	<5.0	<5.0	<5.0	<5.0	<5.0	<5.0	<5.0	<5.0	<5.0	<5.0
1,2,4-Trichlorobenzene	ug/L	<5.0	<5	<5	<5.0	<5.0	<5.0	<5.0	<5.0	<5.0	<5.0	<5.0	<5.0	<5.0	<5.0
2,4,5-Trichlorophenol	ug/L	<5.0	<5	<5	<5.0	<5.0	<5.0	<5.0	<5.0	<5.0	<5.0	<5.0	<5.0	<5.0	<5.0
2,4,6-Trichlorophenol	ug/L	<4.0	<4	<4	<4.0	<4.0	<4.0	<4.0	<4.0	<4.0	<5.0	<5.0	<4.0	<4.0	<4.0
Volatiles	*Units*														
Acetone {I}	ug/L	<50	<50	<50	<50	<25	<25	<20	<20	<25	<25	<20	<25	<25	<50
Benzene {I}	ug/L	<1.0	<1	<1	<1.0	<1.0	<1.0	<1.0	<1.0	<1.0	<1.0	<1.0	<1.0	<1.0	<1.0
Bromodichloromethane	ug/L	<1.0	<1	<1	<1.0	<1.0	<1.0	<1.0	<1.0	<1.0	<1.0	<1.0	<1.0	<1.0	<1.0
Bromoform	ug/L	<1.0	<1	<1	<1.0	<1.0	<1.0	<1.0	<1.0	<1.0	<1.0	<1.0	<1.0	<1.0	<1.0
Bromomethane	ug/L	<5.0	<5	<5	<5.0	<1.0	<1.0	<1.0	<1.0	<1.0	<1.0	<1.0	<1.0	<1.0	<5.0
2-Butanone (MEK) {I}	ug/L	<25	<25	<25	<25	<25	<25	<5.0	<5.0	<5.0	<5.0	<5.0	<5.0	<5.0	<25
Carbon disulfide {I,R}	ug/L	<5.0	<5	<5	<5.0	<5.0	<5.0	<2.5	<2.5	<2.5	<2.5	<2.5	<2.5	<2.5	<5.0
Carbon tetrachloride	ug/L	<1.0	<1	<1	<1.0	<1.0	<1.0	<1.0	<1.0	<1.0	<1.0	<1.0	<1.0	<1.0	<1.0
Chlorobenzene {I}	ug/L	<1.0	**3.7**	**4.0**	**3.1**	**2.2**	**2.1**	**2.3**	**2.1**	<1.0	<1.0	<1.0	<1.0	<1.0	<1.0
Chloroethane {I}	ug/L	<5.0	<5	<5	<5.0	<1.0	<1.0	<1.0	<1.0	<1.0	<1.0	<1.0	<1.0	<1.0	<5.0
Chloroform	ug/L	<1.0	<1	<1	<1.0	<1.0	<1.0	<1.0	<1.0	<1.0	<1.0	<1.0	<1.0	<1.0	<1.0
Chloromethane {I}	ug/L	<5.0	<5	<5	<5.0	<1.0	<1.0	<1.0	<1.0	<1.0	<1.0	<1.0	<1.0	<1.0	<5.0
Dibromochloromethane	ug/L	<5.0	<5	<5	<5.0	<1.0	<1.0	<1.0	<1.0	<1.0	<1.0	<1.0	<1.0	<1.0	<5.0
1,1-Dichloroethane {I}	ug/L	<1.0	<1	<1	<1.0	<1.0	<1.0	<1.0	<1.0	<1.0	<1.0	<1.0	<1.0	<1.0	<1.0
1,2-Dichloroethane {I}	ug/L	<1.0	<1	<1	<1.0	<1.0	<1.0	<1.0	<1.0	<1.0	<1.0	<1.0	<1.0	<1.0	<1.0
1,1-Dichloroethylene {I}	ug/L	<1.0	<1	<1	<1.0	<1.0	<1.0	<1.0	<1.0	<1.0	<1.0	<1.0	<1.0	<1.0	<1.0
cis-1,2-Dichloroethylene {I}	ug/L	<1.0	<1	<1	<1.0	<1.0	<1.0	<1.0	<1.0	<1.0	<1.0	<1.0	<1.0	<1.0	<1.0
1,2-Dichloroethene, Total	ug/L	<1.0	<1	<2.0	<1.0	<1.0	<1.0	<2.0	<2.0	<2.0	<2.0	<2.0	<2.0	<2.0	<1.0
trans-1,2-Dichloroethylene	ug/L	<1.0	<1	<1	<1.0	<1.0	<1.0	<1.0	<1.0	<1.0	<1.0	<1.0	<1.0	<1.0	<1.0
1,2-Dichloropropane {I}	ug/L	<1.0	<1	<2.0	<1.0	<1.0	<1.0	<2.0	<2.0	<1.0	<1.0	<1.0	<1.0	<1.0	<1.0
cis-1,3-Dichloropropene {I,J}	ug/L	<1.0	<1	<1	<1.0	<1.0	<1.0	<1.0	<1.0	<1.0	<1.0	<1.0	<1.0	<1.0	<1.0
trans-1,3-Dichloropropene {I, J}	ug/L	<1.0	<1	<1	<1.0	<1.0	<1.0	<1.0	<1.0	<1.0	<1.0	<1.0	<1.0	<1.0	<1.0
total-1,3-Dichloropropene {I, J}	ug/L	<1.0	<1	<2.0	<1.0	<1.0	<1.0	<2.0	<2.0	<2.0	<2.0	<2.0	<2.0	<2.0	<1.0
Ethylbenzene {I}	ug/L	<1.0	<1	<1	<1.0	<1.0	<1.0	<1.0	<1.0	<1.0	<1.0	<1.0	<1.0	<1.0	<1.0
2-Hexanone {I}	ug/L	<50	<50	<50	<50	<50	<50	<5.0	<5.0	<50	<50	<5.0	<50	<50	<50
Methylene chloride	ug/L	<5.0	<5	<5	<5.0	<5.0	<5.0	<5.0	<5.0	<5.0	<5.0	<5.0	<5.0	<5.0	<5.0
4-Methyl-2-pentanone (MIBK) {I}	ug/L	<50	<50	<50	<50	<50	<50	<5.0	<5.0	<50	<50	<5.0	<50	<50	<50
Styrene {I}	ug/L	<1.0	<1	<1	<1.0	<1.0	<1.0	<1.0	<1.0	<1.0	<1.0	<1.0	<1.0	<1.0	<1.0
1,1,2,2-Tetrachloroethane	ug/L	<1.0	<1	<1	<1.0	<1.0	<1.0	<1.0	<1.0	<1.0	<1.0	<1.0	<1.0	<1.0	<1.0
Tetrachloroethylene	ug/L	<1.0	<1	<2.0	<1.0	<1.0	<1.0	<2.0	<2.0	<1.0	<1.0	<1.0	<1.0	<1.0	<1.0
Toluene {I}	ug/L	<1.0	<1	<1	<1.0	<1.0	<1.0	<1.0	<1.0	<1.0	<1.0	<1.0	<1.0	<1.0	<1.0
1,1,1-Trichloroethane	ug/L	<1.0	<1	<1	<1.0	<1.0	<1.0	<1.0	<1.0	<1.0	<1.0	<1.0	<1.0	<1.0	<1.0
1,1,2-Trichloroethane	ug/L	<1.0	<1	<1	<1.0	<1.0	<1.0	<1.0	<1.0	<1.0	<1.0	<1.0	<1.0	<1.0	<1.0

Table 2
Summary of Groundwater Analytical Results
Dunton Park Property
Holland, Michigan

Sample Location		MW-DP-1	MW-DP-1	MW-DP-1	MW-DP-1	MW-DP-1	MW-DP-1	MW-DP-1	MW-DP-1 Dup	MW-DP-2	MW-DP-2	MW-DP-2	MW-DP-2	MW-DP-2	MW-DP-2
Lab Sample ID		0512430-03	0609569-01	0709267-06	0809275-04	0904029-06	1002267-04	1106436-1	1106436-2	0311347-05	0401242-02	0405205-05	0407439-13	0410457-02	0503405-01
Sampled By		Horizon	Horizon	Horizon	Horizon	Horizon	Horizon	Horizon	Horizon	Horizon	Horizon	Horizon	Horizon	Horizon	Horizon
Analyzed By		e-Lab.	e-Lab.	e-Lab	ALS	ALS	ALS	ALS	ALS	e-Lab	e-Lab	e-Lab	e-Lab	e-Lab.	e-Lab.
Sample Date		12/21/2005	9/28/2006	9/13/2007	9/12/2008	4/1/2009	2/15/2010	6/15/2011	6/15/2011	11/25/2003	1/22/2004	5/12/2004	7/29/2004	10/22/2004	3/23/2005
Sample Depth (Ft.)															
Volatiles Cont.	*Units*														
Trichloroethylene	ug/L	<1.0	<1	<1	<1.0	<1.0	<1.0	<1.0	<1.0	<1.0	<1.0	<1.0	<1.0	<1.0	<1.0
Vinyl chloride	ug/L	<1.0	<1	<1	<1.0	<1.0	<1.0	<1.0	<1.0	<1.0	<1.0	<1.0	<1.0	<1.0	<1.0
Xylene, o	ug/L	<1.0	<1	<2.0	<1.0	<2.0	<2.0	<2.0	<2.0	<2.0	<2.0	<2.0	<2.0	<2.0	<1.0
Xylene, p&m	ug/L	<1.0	<1	<1	<1.0	<1.0	<1.0	<1.0	<1.0	<1.0	<1.0	<1.0	<1.0	<1.0	<1.0
Xylene (Total)	ug/L	<3.0	<3	<3	<1.0	<3.0	<3.0	<2.0	<2.0	<3.0	<3.0	<3.0	<3.0	<3.0	<3.0

Table 2
Summary of Groundwater Analytical Results
Dunton Park Property
Holland, Michigan

Sample Location Lab Sample ID Sampled By Analyzed By Sample Date Sample Depth (Ft.)		MW-DP-2 0506565-06 Horizon e-Lab. 6/28/2005	MW-DP-2 0512430-04 Horizon e-Lab. 12/21/2005	MW-DP-2 0609569-01 Horizon e-Lab. 9/28/2006	MW-DP-2 0709267-07 Horizon e-Lab 9/13/2007	MW-DP-2 0809275-05 Horizon ALS 9/12/2008	MW-DP-2 0904029-05 Horizon ALS 4/1/2009	MW-DP-2 1002267-03 Horizon ALS 2/15/2010	MW-DP-2 1106436-3 Horizon ALS 6/15/2011	MW-DP-3 0311347-04 Horizon e-Lab 11/25/2003	MW-DP-3 0401242-03 Horizon e-Lab 1/22/2004	MW-DP-3 0405205-04 Horizon e-Lab 5/12/2004	MW-DP-3 0407439-14 Horizon e-Lab 7/29/2004	MW-DP-3 0410457-03 Horizon e-Lab. 10/22/2004	MW-DP-3 0503405-02 Horizon e-Lab. 3/23/2005
Inorganics	*Units*														
Arsenic {B} Total	mg/L	---	---	---	---	---	---	---	---	<0.001	---	<0.010	---	---	---
Barium Total	mg/L	---	---	---	---	---	---	---	---	---	---	**0.27**	---	---	---
Chromium, Total	mg/L	---	---	---	---	---	---	---	---	<0.005	---	<0.0050	---	---	---
Copper {B} Total	mg/L	---	---	---	---	---	---	---	---	<0.025	---	<0.020	---	---	---
Mercury, Total {B,Z}	mg/L	---	---	---	---	---	---	---	---	<0.0002	---	<0.00020	---	---	---
Selenium {B} Total	mg/L	---	---	---	---	---	---	---	---	<0.005	---	<0.0020	---	---	---
Silver {B} Total	mg/L	---	---	---	---	---	---	---	---	<0.0005	---	<0.00050	---	---	---
Zinc {B} Total	mg/L	---	---	---	---	---	---	---	---	---	---	<0.010	---	---	---
Misc.	*Units*														
Biochemical Oxygen Demand	mg/L	---	---	---	---	---	---	---	---	---	---	<2.4	---	---	---
Carbonaceous Biochemical Oxygen Demand	mg/L	---	---	---	---	---	---	---	---	---	---	<2.0	---	---	---
Chemical Oxygen Demand	mg/L	---	---	---	---	---	---	---	---	---	---	**16**	---	---	---
Nitrogen, Ammonia (total)	mg/L	---	---	---	---	---	---	---	---	---	---	**1.7**	---	---	---
Nitrogen, Ammonia, unionized	mg/L	---	---	---	---	---	---	---	---	---	---	**0.12**	---	---	---
Nitrogen, Nitrate, total{B,N}	mg/L	---	---	---	---	---	---	---	---	---	---	---	<0.10	---	---
PCB's	*Units*														
Aroclor 1016	ug/L	---	---	---	---	---	---	---	---	<0.20	---	---	---	---	---
Aroclor 1221	ug/L	---	---	---	---	---	---	---	---	<0.20	---	---	---	---	---
Aroclor 1232	ug/L	---	---	---	---	---	---	---	---	<0.40	---	---	---	---	---
Aroclor 1242	ug/L	---	---	---	---	---	---	---	---	<0.20	---	---	---	---	---
Aroclor 1248	ug/L	---	---	---	---	---	---	---	---	<0.20	---	---	---	---	---
Aroclor 1254	ug/L	---	---	---	---	---	---	---	---	<0.20	---	---	---	---	---
Aroclor 1260	ug/L	---	---	---	---	---	---	---	---	<0.20	---	---	---	---	---
Semi-Volatiles	*Units*														
Acenaphthene	ug/L	<5.0	<5.0	<5	<5	<5.0	<5.0	<5.0	<5.0	<5.0	<5.0	<5.0	<5.0	<5.0	<5.0
Acenaphthylene	ug/L	<5.0	<5.0	<5	<5	<5.0	<5.0	<5.0	<5.0	<5.0	<5.0	<5.0	<5.0	<5.0	<5.0
Aniline {I}	ug/L	<4.0	<4.0	<4	<4	<20	<4.0	<4.0	<20	<20	<20	<20	<20	<20	<4.0
Anthracene	ug/L	<5.0	<5.0	<5	<5	<5.0	<5.0	<5.0	<5.0	<5.0	<5.0	<5.0	<5.0	<5.0	<5.0
Benzo(a)anthracene {Q}	ug/L	<1.0	<1.0	<1	<1	<1.0	<1.0	<1.0	<1.0	<1.0	<1.0	<5.0	<1.0	<1.0	<1.0
Benzo(a)pyrene {Q}	ug/L	<1.0	<1.0	<1	<1	<2.0	<1.0	<1.0	<2.0	<2.0	<2.0	<5.0	<2.0	<2.0	<1.0
Benzo(b)fluoranthene {Q}	ug/L	<1.0	<1.0	<1	<1	<2.0	<1.0	<1.0	<2.0	<2.0	<2.0	<5.0	<2.0	<2.0	<1.0
Benzo(g,h,i)perylene	ug/L	<1.0	<1.0	<1	<1	<5.0	<1.0	<1.0	<5.0	<5.0	<5.0	<5.0	<5.0	<5.0	<1.0
Benzo(k)fluoranthene {Q}	ug/L	<1.0	<1.0	<1	<1	<5.0	<1.0	<1.0	<5.0	<5.0	<5.0	<5.0	<5.0	<5.0	<1.0
Benzophenone	ug/L	<50	<50	<50	<50	<50	<50	<50	<50	<50	<50	<50	<50	<50	<50
bis(2-Chloroethoxy)methane	ug/L	<5.0	<5.0	<5	<5	<5.0	<5.0	<5.0	<5.0	<5.0	<5.0	<5.0	<5.0	<5.0	<5.0
bis(2-Chloroethyl)ether {I}	ug/L	<1.0	<1.0	<1	<1	<1.0	<1.0	<1.0	<5.0	<1.0	<1.0	<5.0	<1.0	<1.0	<1.0
bis(2-Chloroisopropyl)ether	ug/L	<5.0	<5.0	<5	<5	<5.0	<5.0	<5.0	<5.0	<5.0	<5.0	<5.0	<5.0	<5.0	<5.0
bis(2-Ethylhexyl)phthalate	ug/L	<5.0	<5.0	<5	<5	<5.0	<5.0	<5.0	<5.0	<5.0	<5.0	<5.0	<5.0	<5.0	**5.7 B**
4-Bromo diphenyl ether	ug/L	<5.0	<5.0	<5	<5	<5.0	<5.0	<5.0	<5.0	<5.0	<5.0	<5.0	<5.0	<5.0	<5.0
Butyl benzyl phthalate	ug/L	<5.0	<5.0	<5	<5	<5.0	<5.0	<5.0	<5.0	<5.0	<5.0	<5.0	<5.0	<5.0	<5.0
Carbazole	ug/L	<10	<10	<10	<10	<10	<10	<10	<10	<10	<10	<10	<10	<10	<10
4-Chloroaniline	ug/L	<10	<10	<10	<10	<20	<10	<10	<20	<20	<20	<20	<20	<20	<10

Table 2
Summary of Groundwater Analytical Results
Dunton Park Property
Holland, Michigan

Sample Location		MW-DP-2	MW-DP-2	MW-DP-2	MW-DP-2	MW-DP-2	MW-DP-2	MW-DP-2	MW-DP-2	MW-DP-3	MW-DP-3	MW-DP-3	MW-DP-3	MW-DP-3	MW-DP-3
Lab Sample ID		0506565-06	0512430-04	0609569-01	0709267-07	0809275-05	0904029-05	1002267-03	1106436-3	0311347-04	0401242-03	0405205-04	0407439-14	0410457-03	0503405-02
Sampled By		Horizon	Horizon	Horizon	Horizon	Horizon	Horizon	Horizon	Horizon	Horizon	Horizon	Horizon	Horizon	Horizon	Horizon
Analyzed By		e-Lab.	e-Lab.	e-Lab.	e-Lab	ALS	ALS	ALS	ALS	e-Lab	e-Lab	e-Lab	e-Lab	e-Lab.	e-Lab.
Sample Date		6/28/2005	12/21/2005	9/28/2006	9/13/2007	9/12/2008	4/1/2009	2/15/2010	6/15/2011	11/25/2003	1/22/2004	5/12/2004	7/29/2004	10/22/2004	3/23/2005
Sample Depth (Ft.)															
Semi-Volatiles Cont.	*Units*														
4-Chloro-3-methylphenol	ug/L	<5.0	<5.0	<5	<5	<5.0	<5.0	<5.0	<5.0	<5.0	<5.0	<5.0	<5.0	<5.0	<5.0
beta-Chloronaphthalene	ug/L	<5.0	<5.0	<5	<5	<5.0	<5.0	<5.0	<5.0	<5.0	<5.0	<5.0	<5.0	<5.0	<5.0
2-Chlorophenol	ug/L	<10	<10	<10	<10	<5.0	<5.0	<5.0	<5.0	<5.0	<5.0	<5.0	<5.0	<5.0	<10
4-Chloro diphenyl ether	ug/L	<5.0	<5.0	<5	<5	<5.0	<5.0	<5.0	<5.0	<5.0	<5.0	<5.0	<5.0	<5.0	<5.0
Chrysene {Q}	ug/L	<1.0	<1.0	<1	<1	<5.0	<1.0	<1.0	<5.0	<5.0	<5.0	<5.0	<5.0	<5.0	<1.0
Dibenzo(a,h)anthracene {Q}	ug/L	<2.0	<2.0	<2	<2	<2.0	<2.0	<2.0	<5.0	<2.0	<2.0	<5.0	<2.0	<2.0	<2.0
Dibenzofuran	ug/L	<4.0	<4.0	<4	<4	<5.0	<4.0	<4.0	<5.0	<5.0	<5.0	<5.0	<5.0	<5.0	<4.0
1,2-Dichlorobenzene	ug/L	<1.0	<1.0	<1	<1	<5.0	<1.0	<1.0	<1.0	<5.0	<5.0	<5.0	<5.0	<5.0	<1.0
1,3-Dichlorobenzene	ug/L	<1.0	<1.0	<1	<1	<5.0	<1.0	<1.0	<1.0	<5.0	<5.0	<5.0	<5.0	<5.0	<1.0
1,4-Dichlorobenzene	ug/L	<1.0	<1.0	<1	<1	<5.0	<1.0	<1.0	<1.0	<5.0	<5.0	<5.0	<5.0	<5.0	<1.0
3,3'-Dichlorobenzidine	ug/L	<0.39	<0.39	<0.39	<0.39	<20	<0.39	<0.39	<0.30	<20	<20	<20	<20	<20	<0.39
2,4-Dichlorophenol	ug/L	<10	<10	<10	<10	<10	<10	<10	<10	<10	<10	<10	<10	<10	<10
Diethyl phthalate	ug/L	<5.0	<5.0	<5	<5	<20	<5.0	<5.0	<5.0	<20	<20	<20	<20	<20	<5.0
Dimethyl phthalate	ug/L	<5.0	<5.0	<5	<5	<20	<5.0	<5.0	<5.0	<20	<20	<20	<20	<20	<5.0
2,4-Dimethylphenol	ug/L	<5.0	<5.0	<5	<5	<5.0	<5.0	<5.0	<5.0	<5.0	<5.0	<5.0	<5.0	<5.0	<5.0
Di-n-butyl phthalate	ug/L	<5.0	<5.0	<5	<5	<5.0	<5.0	<5.0	<5.0	<5.0	<5.0	<5.0	<5.0	<5.0	<5.0
2,4-Dinitrophenol	ug/L	<25	<25	<25	<25	<20	<20	<20	<20	<20	<20	<20	<20	<20	<25
2,4-Dinitrotoluene	ug/L	<5.0	<5.0	<5	<5	<5.0	<5.0	<5.0	<5.0	<5.0	<5.0	<5.0	<5.0	<5.0	<5.0
2,6-Dinitrotoluene	ug/L	<5.0	<5.0	<5	<5	<5.0	<5.0	<5.0	<5.0	<5.0	<5.0	<5.0	<5.0	<5.0	<5.0
Di-n-octyl phthalate	ug/L	<5.0	<5.0	<5	<5	<5.0	<5.0	<5.0	<5.0	<5.0	<5.0	<5.0	<5.0	<5.0	<5.0
5,5-Diphenylhydantoin	ug/L	**49**	<30	<30	<30	<30	<30	<30	<15	**31**	<30	**31**	**30**	<30	**69**
Fluoranthene	ug/L	<1.0	<1.0	<1	<1	<5.0	<1.0	<1.0	<5.0	<5.0	<5.0	<5.0	<5.0	<5.0	<1.0
Fluorene	ug/L	<5.0	<5.0	<5	<5	<5.0	<5.0	<5.0	<5.0	<5.0	<5.0	<5.0	<5.0	<5.0	<5.0
Hexachlorobenzene (C-66)	ug/L	<0.20	<0.20	<0.2	<0.2	<5.0	<0.20	<0.20	<5.0	<5.0	<5.0	<5.0	<5.0	<5.0	<0.20
Hexachlorobutadiene (C-46)	ug/L	<0.20	<0.20	<0.3	<0.3	<5.0	<0.30	<0.30	<5.0	<5.0	<5.0	<5.0	<5.0	<5.0	<0.20
Hexachlorocyclopentadiene (C-56)	ug/L	<5.0	<5.0	<5	<5	<5.0	<5.0	<5.0	<5.0	<5.0	<5.0	<5.0	<5.0	<5.0	<5.0
Hexachloroethane	ug/L	<5.0	<5.0	<5	<5	<5.0	<5.0	<5.0	<5.0	<5.0	<5.0	<5.0	<5.0	<5.0	<5.0
Indeno(1,2,3-cd)pyrene {Q}	ug/L	<2.0	<2.0	<2	<2	<2.0	<2.0	<2.0	<2.0	<2.0	<2.0	<5.0	<2.0	<2.0	<2.0
Isophorone	ug/L	<5.0	<5.0	<5	<5	<5.0	<5.0	<5.0	<5.0	<5.0	<5.0	<5.0	<5.0	<5.0	<5.0
2-Methyl-4,6-dinitrophenol	ug/L	<20	<5.0	<20	<20	<20	<20	<20	<20	<20	<20	<20	<20	<20	<20
2-Methylnaphthalene	ug/L	<5.0	<10	<5	<5	<5.0	<5.0	<5.0	<5.0	<5.0	<5.0	<5.0	<5.0	<5.0	<5.0
2-Methylphenol {J}	ug/L	<10	<25	<10	<10	<5.0	<5.0	<5.0	<5.0	<5.0	<5.0	<5.0	<5.0	<5.0	<10
3-Methylphenol {J}	ug/L	---	---	---	---	---	---	---	---	---	---	---	---	---	---
4-Methylphenol {J}	ug/L	<10	<10	<10	<10	<5.0	<5.0	<5.0	<5.0	<5.0	<5.0	<5.0	<5.0	<5.0	<10
Naphthalene	ug/L	<5.0	<5.0	<5	<5	<5.0	<5.0	<5.0	<5.0	<5.0	<5.0	<5.0	<5.0	<5.0	<5.0
2-Nitroaniline	ug/L	<25	<25	<25	<25	<20	<20	<20	<20	<20	<20	<20	<20	<20	<25
3-Nitroaniline	ug/L	<25	<25	<25	<25	<20	<20	<20	<20	<20	<20	<20	<20	<20	<25
4-Nitroaniline	ug/L	<25	<25	<25	<25	<20	<20	<20	<20	<20	<20	<20	<20	<20	<25
Nitrobenzene {I}	ug/L	<3.0	<3.0	<3	<3	<2.0	<2.0	<2.0	<5.0	<2.0	<2.0	<5.0	<2.0	<2.0	<3.0
2-Nitrophenol	ug/L	<5.0	<5.0	<5	<5	<5.0	<5.0	<5.0	<5.0	<5.0	<5.0	<5.0	<5.0	<5.0	<5.0
4-Nitrophenol	ug/L	<25	<25	<25	<25	<20	<20	<20	<20	<20	<20	<20	<20	<20	<25
n-Nitroso-di-n-propylamine	ug/L	<5.0	<5.0	<5	<5	<5.0	<5.0	<5.0	<5.0	<5.0	<5.0	<5.0	<5.0	<5.0	<5.0

Table 2
Summary of Groundwater Analytical Results
Dunton Park Property
Holland, Michigan

Sample Location		MW-DP-2	MW-DP-2	MW-DP-2	MW-DP-2	MW-DP-2	MW-DP-2	MW-DP-2	MW-DP-2	MW-DP-3	MW-DP-3	MW-DP-3	MW-DP-3	MW-DP-3	MW-DP-3
Lab Sample ID		0506565-06	0512430-04	0609569-01	0709267-07	0809275-05	0904029-05	1002267-03	1106436-3	0311347-04	0401242-03	0405205-04	0407439-14	0410457-03	0503405-02
Sampled By		Horizon	Horizon	Horizon	Horizon	Horizon	Horizon	Horizon	Horizon	Horizon	Horizon	Horizon	Horizon	Horizon	Horizon
Analyzed By		e-Lab.	e-Lab.	e-Lab.	e-Lab	ALS	ALS	ALS	ALS	e-Lab	e-Lab	e-Lab	e-Lab	e-Lab.	e-Lab.
Sample Date		6/28/2005	12/21/2005	9/28/2006	9/13/2007	9/12/2008	4/1/2009	2/15/2010	6/15/2011	11/25/2003	1/22/2004	5/12/2004	7/29/2004	10/22/2004	3/23/2005
Sample Depth (Ft.)															
Semi-Volatiles Cont.	*Units*														
N-Nitrosodiphenylamine	ug/L	<5.0	<3.0	<5	<5	<5.0	<5.0	<5.0	<5.0	<5.0	<5.0	<5.0	<5.0	<5.0	<5.0
Pentachlorophenol	ug/L	<2.0	<2.0	<2	<2	<20	<2.0	<2.0	<20	<20	<20	<20	<20	<20	<2.0
Phenanthrene	ug/L	<2.0	<2.0	<2	<2	<5.0	<2.0	<2.0	<5.0	<5.0	<5.0	<5.0	<5.0	<5.0	<2.0
Phenol	ug/L	<5.0	<5.0	<5	<5	<5.0	<5.0	<5.0	<5.0	<5.0	<5.0	<5.0	<5.0	<5.0	<5.0
Pyrene	ug/L	<5.0	<5.0	<5	<5	<5.0	<5.0	<5.0	<5.0	<5.0	<5.0	<5.0	<5.0	<5.0	<5.0
1,2,4-Trichlorobenzene	ug/L	<5.0	<5.0	<5	<5	<5.0	<5.0	<5.0	<5.0	<5.0	<5.0	<5.0	<5.0	<5.0	<5.0
2,4,5-Trichlorophenol	ug/L	<5.0	<5.0	<5	<5	<5.0	<5.0	<5.0	<5.0	<5.0	<5.0	<5.0	<5.0	<5.0	<5.0
2,4,6-Trichlorophenol	ug/L	<4.0	<4.0	<4	<4	<4.0	<4.0	<4.0	<4.0	<4.0	<4.0	<5.0	<4.0	<4.0	<4.0
Volatiles	*Units*														
Acetone {I}	ug/L	<50	<50	<50	<50	<50	<25	<25	<20	<25	<25	<20	<25	<25	<50
Benzene {I}	ug/L	<1.0	<1.0	<1	<1	<1.0	<1.0	<1.0	<1.0	<1.0	<1.0	<1.0	<1.0	<1.0	<1.0
Bromodichloromethane	ug/L	<1.0	<1.0	<1	<1	<1.0	<1.0	<1.0	<1.0	<1.0	<1.0	<1.0	<1.0	<1.0	<1.0
Bromoform	ug/L	<1.0	<1.0	<1	<1	<1.0	<1.0	<1.0	<1.0	<1.0	<1.0	<1.0	<1.0	<1.0	<1.0
Bromomethane	ug/L	<5.0	<5.0	<5	<5	<5.0	<1.0	<1.0	<1.0	<1.0	<1.0	<1.0	<1.0	<1.0	<5.0
2-Butanone (MEK) {I}	ug/L	<25	<25	<25	<25	<25	<25	<25	<5.0	<5.0	<5.0	<5.0	<5.0	<5.0	<25
Carbon disulfide {I,R}	ug/L	<5.0	<5.0	<5	<5	<5.0	<5.0	<5.0	<2.5	<2.5	<2.5	<2.5	<2.5	<2.5	<5.0
Carbon tetrachloride	ug/L	<1.0	<1.0	<1	<1	<1.0	<1.0	<1.0	<1.0	<1.0	<1.0	<1.0	<1.0	<1.0	<1.0
Chlorobenzene {I}	ug/L	<1.0	**21**	<1	<1	<1.0	<1.0	<1.0	<1.0	**24**	<1.0	**21**	**22**	**13**	**24**
Chloroethane {I}	ug/L	<5.0	<5.0	<5	<5	<5.0	<1.0	<1.0	<1.0	<1.0	<1.0	<1.0	<1.0	<1.0	<5.0
Chloroform	ug/L	<1.0	<1.0	<1	<1	<1.0	<1.0	<1.0	<1.0	<1.0	<1.0	<1.0	<1.0	<1.0	<1.0
Chloromethane {I}	ug/L	<5.0	<5.0	<5	<5	<5.0	<1.0	<1.0	<1.0	<1.0	<1.0	<1.0	<1.0	<1.0	<5.0
Dibromochloromethane	ug/L	<5.0	<5.0	<5	<5	<5.0	<1.0	<1.0	<1.0	<1.0	<1.0	<1.0	<1.0	<1.0	<5.0
1,1-Dichloroethane {I}	ug/L	<1.0	<1.0	<1	<1	<1.0	<1.0	<1.0	<1.0	<1.0	<1.0	<1.0	<1.0	<1.0	<1.0
1,2-Dichloroethane {I}	ug/L	<1.0	<1.0	<1	<1	<1.0	<1.0	<1.0	<1.0	<1.0	<1.0	<1.0	<1.0	<1.0	<1.0
1,1-Dichloroethylene {I}	ug/L	<1.0	<1.0	<1	<1	<1.0	<1.0	<1.0	<1.0	<1.0	<1.0	<1.0	<1.0	<1.0	<1.0
cis-1,2-Dichloroethylene {I}	ug/L	<1.0	<1.0	<1	<1	<1.0	<1.0	<1.0	<1.0	<1.0	<1.0	<1.0	<1.0	<1.0	<1.0
1,2-Dichloroethene, Total	ug/L	<1.0	<1.0	<1	<2.0	<1.0	<1.0	<1.0	<2.0	<2.0	<2.0	<2.0	<2.0	<2.0	<1.0
trans-1,2-Dichloroethylene	ug/L	<1.0	<1.0	<1	<1	<1.0	<1.0	<1.0	<1.0	<1.0	<1.0	<1.0	<1.0	<1.0	<1.0
1,2-Dichloropropane {I}	ug/L	<1.0	<1.0	<1	<2.0	<1.0	<1.0	<1.0	<2.0	<1.0	<1.0	<1.0	<1.0	<1.0	<1.0
cis-1,3-Dichloropropene {I,J}	ug/L	<1.0	<1.0	<1	<1	<1.0	<1.0	<1.0	<1.0	<1.0	<1.0	<1.0	<1.0	<1.0	<1.0
trans-1,3-Dichloropropene {I, J}	ug/L	<1.0	<1.0	<1	<1	<1.0	<1.0	<1.0	<1.0	<1.0	<1.0	<1.0	<1.0	<1.0	<1.0
total-1,3-Dichloropropene {I, J}	ug/L	<1.0	<1.0	<1	<2.0	<1.0	<1.0	<1.0	<2.0	<2.0	<2.0	<2.0	<2.0	<2.0	<1.0
Ethylbenzene {I}	ug/L	<1.0	<1.0	<1	<1	<1.0	<1.0	<1.0	<1.0	<1.0	<1.0	<1.0	<1.0	<1.0	<1.0
2-Hexanone {I}	ug/L	<50	<50	<50	<50	<50	<50	<50	<5.0	<50	<50	<5.0	<50	<50	<50
Methylene chloride	ug/L	<5.0	<5.0	<5	<5	<5.0	<5.0	<5.0	<5.0	<5.0	<5.0	<5.0	<5.0	<5.0	<5.0
4-Methyl-2-pentanone (MIBK) {I}	ug/L	<50	<50	<50	<50	<50	<50	<50	<5.0	<50	<50	<5.0	<50	<50	<50
Styrene {I}	ug/L	<1.0	<1.0	<1	<1	<1.0	<1.0	<1.0	<1.0	<1.0	<1.0	<1.0	<1.0	<1.0	<1.0
1,1,2,2-Tetrachloroethane	ug/L	<1.0	<1.0	<1	<1	<1.0	<1.0	<1.0	<1.0	<1.0	<1.0	<1.0	<1.0	<1.0	<1.0
Tetrachloroethylene	ug/L	<1.0	<1.0	<1	<2.0	<1.0	<1.0	<1.0	<2.0	<1.0	<1.0	<1.0	<1.0	<1.0	<1.0
Toluene {I}	ug/L	<1.0	<1.0	<1	<1	<1.0	<1.0	<1.0	<1.0	<1.0	<1.0	<1.0	<1.0	<1.0	<1.0
1,1,1-Trichloroethane	ug/L	<1.0	<1.0	<1	<1	<1.0	<1.0	<1.0	<1.0	<1.0	<1.0	<1.0	<1.0	<1.0	<1.0
1,1,2-Trichloroethane	ug/L	<1.0	<1.0	<1	<1	<1.0	<1.0	<1.0	<1.0	<1.0	<1.0	<1.0	<1.0	<1.0	<1.0

Table 2
Summary of Groundwater Analytical Results
Dunton Park Property
Holland, Michigan

Sample Location		MW-DP-2	MW-DP-2	MW-DP-2	MW-DP-2	MW-DP-2	MW-DP-2	MW-DP-2	MW-DP-2	MW-DP-3	MW-DP-3	MW-DP-3	MW-DP-3	MW-DP-3	MW-DP-3
Lab Sample ID		0506565-06	0512430-04	0609569-01	0709267-07	0809275-05	0904029-05	1002267-03	1106436-3	0311347-04	0401242-03	0405205-04	0407439-14	0410457-03	0503405-02
Sampled By		Horizon	Horizon	Horizon	Horizon	Horizon	Horizon	Horizon	Horizon	Horizon	Horizon	Horizon	Horizon	Horizon	Horizon
Analyzed By		e-Lab.	e-Lab.	e-Lab.	e-Lab	ALS	ALS	ALS	ALS	e-Lab	e-Lab	e-Lab	e-Lab	e-Lab.	e-Lab.
Sample Date		6/28/2005	12/21/2005	9/28/2006	9/13/2007	9/12/2008	4/1/2009	2/15/2010	6/15/2011	11/25/2003	1/22/2004	5/12/2004	7/29/2004	10/22/2004	3/23/2005
Sample Depth (Ft.)															
Volatiles Cont.	*Units*														
Trichloroethylene	ug/L	<1.0	<1.0	<1	<1	<1.0	<1.0	<1.0	<1.0	<1.0	<1.0	<1.0	<1.0	<1.0	<1.0
Vinyl chloride	ug/L	<1.0	<1.0	<1	<1	<1.0	<1.0	<1.0	<1.0	<1.0	<1.0	<1.0	<1.0	<1.0	<1.0
Xylene, o	ug/L	<1.0	<1.0	<1	<2.0	<1.0	<2.0	<2.0	<2.0	<2.0	<2.0	<2.0	<2.0	<2.0	<1.0
Xylene, p&m	ug/L	<1.0	<1.0	<1	<1	<1.0	<1.0	<1.0	<1.0	<1.0	<1.0	<1.0	<1.0	<1.0	<1.0
Xylene (Total)	ug/L	<3.0	<3.0	<3	<3	<1.0	<3.0	<3.0	<2.0	<3.0	<3.0	<3.0	<3.0	<3.0	<3.0

Table 2
Summary of Groundwater Analytical Results
Dunton Park Property
Holland, Michigan

Sample Location		MW-DP-3	MW-DP-3	MW-DP-3	MW-DP-3	MW-DP-3	MW-DP-3	MW-DP-3	MW-DP-3 Dup	MW-DP-3	MW-DP-4	MW-DP-4	MW-DP-4	MW-DP-4	MW-DP-4
Lab Sample ID		0506565-05	0512430-05	0609569-01	0709267-08	0809275-06	0904029-04	1002267-01	1002267-02	1106437-1	0311347-03	0401242-04	0405205-03	0407439-15	0410457-04
Sampled By		Horizon	Horizon	Horizon	Horizon	Horizon	Horizon	Horizon	Horizon	Horizon	Horizon	Horizon	Horizon	Horizon	Horizon
Analyzed By		e-Lab.	e-Lab.	e-Lab.	e-Lab	ALS	ALS	ALS	ALS	ALS	e-Lab	e-Lab	e-Lab	e-Lab	e-Lab.
Sample Date		6/28/2005	12/21/2005	9/28/2006	9/13/2007	9/12/2008	4/1/2009	2/15/2010	2/15/2010	6/15/2011	11/25/2003	1/22/2004	5/11/2004	7/29/2004	10/22/2004
Sample Depth (Ft.)															
Inorganics	*Units*														
Arsenic {B} Total	mg/L	---	---	---	---	---	---	---	---	---	**0.002**	---	<0.010	---	---
Barium Total	mg/L	---	---	---	---	---	---	---	---	---	---	---	**0.11**	---	---
Chromium, Total	mg/L	---	---	---	---	---	---	---	---	---	<0.005	---	<0.0050	---	---
Copper {B} Total	mg/L	---	---	---	---	---	---	---	---	---	<0.025	---	<0.020	---	---
Mercury, Total {B,Z}	mg/L	---	---	---	---	---	---	---	---	---	<0.0002	---	<0.00020	---	---
Selenium {B} Total	mg/L	---	---	---	---	---	---	---	---	---	<0.005	---	<0.0020	---	---
Silver {B} Total	mg/L	---	---	---	---	---	---	---	---	---	<0.0005	---	<0.00050	---	---
Zinc {B} Total	mg/L	---	---	---	---	---	---	---	---	---	---	---	<0.010	---	---
Misc.	*Units*														
Biochemical Oxygen Demand	mg/L	---	---	---	---	---	---	---	---	---	---	---	**3.2**	---	---
Carbonaceous Biochemical Oxygen Demand	mg/L	---	---	---	---	---	---	---	---	---	---	---	<2.0	---	---
Chemical Oxygen Demand	mg/L	---	---	---	---	---	---	---	---	---	---	---	**26**	---	---
Nitrogen, Ammonia (total)	mg/L	---	---	---	---	---	---	---	---	---	---	---	**2.3**	---	---
Nitrogen, Ammonia, unionized	mg/L	---	---	---	---	---	---	---	---	---	---	---	**0.17**	---	---
Nitrogen, Nitrate, total{B,N}	mg/L	---	---	---	---	---	---	---	---	---	---	---	---	<0.10	---
PCB's	*Units*														
Aroclor 1016	ug/L	---	---	---	---	---	---	---	---	---	<0.20	---	---	---	---
Aroclor 1221	ug/L	---	---	---	---	---	---	---	---	---	<0.20	---	---	---	---
Aroclor 1232	ug/L	---	---	---	---	---	---	---	---	---	<0.40	---	---	---	---
Aroclor 1242	ug/L	---	---	---	---	---	---	---	---	---	<0.20	---	---	---	---
Aroclor 1248	ug/L	---	---	---	---	---	---	---	---	---	<0.20	---	---	---	---
Aroclor 1254	ug/L	---	---	---	---	---	---	---	---	---	<0.20	---	---	---	---
Aroclor 1260	ug/L	---	---	---	---	---	---	---	---	---	<0.20	---	---	---	---
Semi-Volatiles	*Units*														
Acenaphthene	ug/L	<5.0	<5.1	<5	<5	<5.0	<5.0	<5.0	<5.0	<5.0	<5.1	<5.0	<5.0	<5.0	<5.0
Acenaphthylene	ug/L	<5.0	<5.1	<5	<5	<5.0	<5.0	<5.0	<5.0	<5.0	<5.1	<5.0	<5.0	<5.0	<5.0
Aniline {I}	ug/L	<4.0	<4.1	<4	<4	<20	<4.0	<4.0	<4.0	<20	<20	<20	<20	<20	<20
Anthracene	ug/L	<5.0	<5.1	<5	<5	<5.0	<5.0	<5.0	<5.0	<5.0	<5.1	<5.0	<5.0	<5.0	<5.0
Benzo(a)anthracene {Q}	ug/L	<1.0	<1.0	<1	<1	<1.0	<1.0	<1.0	<1.0	<1.0	<1.0	<1.0	<5.0	<1.0	<1.0
Benzo(a)pyrene {Q}	ug/L	<1.0	<1.0	<1	<1	<2.0	<1.0	<1.0	<1.0	<2.0	<2.0	<2.0	<5.0	<2.0	<2.0
Benzo(b)fluoranthene {Q}	ug/L	<1.0	<1.0	<1	<1	<2.0	<1.0	<1.0	<1.0	<2.0	<2.0	<2.0	<5.0	<2.0	<2.0
Benzo(g,h,i)perylene	ug/L	<1.0	<1.0	<1	<1	<5.0	<1.0	<1.0	<1.0	<5.0	<5.1	<5.0	<5.0	<5.0	<5.0
Benzo(k)fluoranthene {Q}	ug/L	<1.0	<1.0	<1	<1	<5.0	<1.0	<1.0	<1.0	<5.0	<5.1	<5.0	<5.0	<5.0	<5.0
Benzophenone	ug/L	<50	<51	<50	<50	<50	<50	<50	<50	<50	<51	<50	<50	<50	<50
bis(2-Chloroethoxy)methane	ug/L	<5.0	<5.1	<5	<5	<5.0	<5.0	<5.0	<5.0	<5.0	<5.1	<5.0	<5.0	<5.0	<5.0
bis(2-Chloroethyl)ether {I}	ug/L	<1.0	<1.0	<1	<1	<1.0	<1.0	<1.0	<1.0	<5.0	<1.0	<1.0	<5.0	<1.0	<1.0
bis(2-Chloroisopropyl)ether	ug/L	<5.0	<5.1	<5	<5	<5.0	<5.0	<5.0	<5.0	<5.0	<5.1	<5.0	<5.0	<5.0	<5.0
bis(2-Ethylhexyl)phthalate	ug/L	<5.0	<5.1	<5	<5	<5.0	<5.0	<5.0	<5.0	<5.0	<5.1	<5.0	<5.0	<5.0	<5.0
4-Bromo diphenyl ether	ug/L	<5.0	<5.1	<5	<5	<5.0	<5.0	<5.0	<5.0	<5.0	<5.1	<5.0	<5.0	<5.0	<5.0
Butyl benzyl phthalate	ug/L	<5.0	<5.1	<5	<5	<5.0	<5.0	<5.0	<5.0	<5.0	<5.1	<5.0	<5.0	<5.0	<5.0
Carbazole	ug/L	<10	<10	<10	<10	<10	<10	<10	<10	<10	<10	<10	<10	<10	<10
4-Chloroaniline	ug/L	<10	<10	<10	<10	<20	<10	<10	<10	<20	<20	<20	<20	<20	<20

Table 2
Summary of Groundwater Analytical Results
Dunton Park Property
Holland, Michigan

Sample Location		MW-DP-3	MW-DP-3	MW-DP-3	MW-DP-3	MW-DP-3	MW-DP-3	MW-DP-3	MW-DP-3 Dup	MW-DP-3	MW-DP-4	MW-DP-4	MW-DP-4	MW-DP-4	MW-DP-4
Lab Sample ID		0506565-05	0512430-05	0609569-01	0709267-08	0809275-06	0904029-04	1002267-01	1002267-02	1106437-1	0311347-03	0401242-04	0405205-03	0407439-15	0410457-04
Sampled By		Horizon	Horizon	Horizon	Horizon	Horizon	Horizon	Horizon	Horizon	Horizon	Horizon	Horizon	Horizon	Horizon	Horizon
Analyzed By		e-Lab.	e-Lab.	e-Lab.	e-Lab	ALS	ALS	ALS	ALS	ALS	e-Lab	e-Lab	e-Lab	e-Lab	e-Lab.
Sample Date		6/28/2005	12/21/2005	9/28/2006	9/13/2007	9/12/2008	4/1/2009	2/15/2010	2/15/2010	6/15/2011	11/25/2003	1/22/2004	5/11/2004	7/29/2004	10/22/2004
Sample Depth (Ft.)															
Semi-Volatiles Cont.	*Units*														
4-Chloro-3-methylphenol	ug/L	<5.0	<5.1	<5	<5	<5.0	<5.0	<5.0	<5.0	<5.0	<5.1	<5.0	<5.0	<5.0	<5.0
beta-Chloronaphthalene	ug/L	<5.0	<5.1	<5	<5	<5.0	<5.0	<5.0	<5.0	<5.0	<5.1	<5.0	<5.0	<5.0	<5.0
2-Chlorophenol	ug/L	<10	<10	<10	<10	<5.0	<5.0	<5.0	<5.0	<5.0	<5.1	<5.0	<5.0	<5.0	<5.0
4-Chloro diphenyl ether	ug/L	<5.0	<5.1	<5	<5	<5.0	<5.0	<5.0	<5.0	<5.0	<5.1	<5.0	<5.0	<5.0	<5.0
Chrysene {Q}	ug/L	<1.0	<1.0	<1	<1	<5.0	<1.0	<1.0	<1.0	<5.0	<5.1	<5.0	<5.0	<5.0	<5.0
Dibenzo(a,h)anthracene {Q}	ug/L	<2.0	<2.1	<2	<2	<2.0	<2.0	<2.0	<2.0	<5.0	<2.0	<2.0	<5.0	<2.0	<2.0
Dibenzofuran	ug/L	<4.0	<4.1	<4	<4	<5.0	<4.0	<4.0	<4.0	<5.0	<5.1	<5.0	<5.0	<5.0	<5.0
1,2-Dichlorobenzene	ug/L	<1.0	<1.0	<1	<1	<5.0	<1.0	<1.0	<1.0	<1.0	<5.1	<5.0	<5.0	<5.0	<5.0
1,3-Dichlorobenzene	ug/L	<1.0	<1.0	<1	<1	<5.0	<1.0	<1.0	<1.0	<1.0	<5.1	<5.0	<5.0	<5.0	<5.0
1,4-Dichlorobenzene	ug/L	<1.0	<1.0	<1	<1	<5.0	<1.0	<1.0	<1.0	<1.0	<5.1	<5.0	<5.0	<5.0	<5.0
3,3'-Dichlorobenzidine	ug/L	<0.39	<0.39	<0.39	<0.39	<20	<0.39	<0.39	<0.39	<0.30	<20	<20	<20	<20	<20
2,4-Dichlorophenol	ug/L	<10	<10	<10	<10	<10	<10	<10	<10	<10	<10	<10	<10	<10	<10
Diethyl phthalate	ug/L	<5.0	<5.1	<5	<5	<20	<5.0	<5.0	<5.0	<5.0	<20	<20	<20	<20	<20
Dimethyl phthalate	ug/L	<5.0	<5.1	<5	<5	<20	<5.0	<5.0	<5.0	<5.0	<20	<20	<20	<20	<20
2,4-Dimethylphenol	ug/L	<5.0	<5.1	<5	<5	<5.0	<5.0	<5.0	<5.0	<5.0	<5.1	<5.0	<5.0	<5.0	<5.0
Di-n-butyl phthalate	ug/L	<5.0	<5.1	<5	<5	<5.0	<5.0	<5.0	<5.0	<5.0	<5.1	<5.0	<5.0	<5.0	<5.0
2,4-Dinitrophenol	ug/L	<25	<26	<25	<25	<20	<20	<20	<20	<20	<20	<20	<20	<20	<20
2,4-Dinitrotoluene	ug/L	<5.0	<5.1	<5	<5	<5.0	<5.0	<5.0	<5.0	<5.0	<5.1	<5.0	<5.0	<5.0	<5.0
2,6-Dinitrotoluene	ug/L	<5.0	<5.1	<5	<5	<5.0	<5.0	<5.0	<5.0	<5.0	<5.1	<5.0	<5.0	<5.0	<5.0
Di-n-octyl phthalate	ug/L	<5.0	<5.1	<5	<5	<5.0	<5.0	<5.0	<5.0	<5.0	<5.1	<5.0	<5.0	<5.0	<5.0
5,5-Diphenylhydantoin	ug/L	**53**	**54**	<30	<30	<30	<30	<30	<30	**19**	<30	<30	<30	<30	<30
Fluoranthene	ug/L	<1.0	<1.0	<1	<1	<5.0	<1.0	<1.0	<1.0	<5.0	<5.1	<5.0	<5.0	<5.0	<5.0
Fluorene	ug/L	<5.0	<5.1	<5	<5	<5.0	<5.0	<5.0	<5.0	<5.0	<5.1	<5.0	<5.0	<5.0	<5.0
Hexachlorobenzene (C-66)	ug/L	<0.20	<0.20	<0.2	<0.2	<5.0	<0.20	<0.20	<0.20	<5.0	<5.1	<5.0	<5.0	<5.0	<5.0
Hexachlorobutadiene (C-46)	ug/L	<0.20	<0.20	<0.3	<0.3	<5.0	<0.30	<0.30	<0.30	<5.0	<5.1	<5.0	<5.0	<5.0	<5.0
Hexachlorocyclopentadiene (C-56)	ug/L	<5.0	<5.1	<5	<5	<5.0	<5.0	<5.0	<5.0	<5.0	<5.1	<5.0	<5.0	<5.0	<5.0
Hexachloroethane	ug/L	<5.0	<5.1	<5	<5	<5.0	<5.0	<5.0	<5.0	<5.0	<5.1	<5.0	<5.0	<5.0	<5.0
Indeno(1,2,3-cd)pyrene {Q}	ug/L	<2.0	<2.1	<2	<2	<2.0	<2.0	<2.0	<2.0	<2.0	<2.0	<2.0	<5.0	<2.0	<2.0
Isophorone	ug/L	<5.0	<5.1	<5	<5	<5.0	<5.0	<5.0	<5.0	<5.0	<5.1	<5.0	<5.0	<5.0	<5.0
2-Methyl-4,6-dinitrophenol	ug/L	<20	<20	<20	<20	<20	<20	<20	<20	<20	<20	<20	<20	<20	<20
2-Methylnaphthalene	ug/L	<5.0	<5.1	<5	<5	<5.0	<5.0	<5.0	<5.0	<5.0	<5.1	<5.0	<5.0	<5.0	<5.0
2-Methylphenol {J}	ug/L	<10	<10	<10	<10	<5.0	<5.0	<5.0	<5.0	<5.0	<5.1	<5.0	<5.0	<5.0	<5.0
3-Methylphenol {J}	ug/L	---	---	---	---	---	---	---	---	---	---	---	---	---	---
4-Methylphenol {J}	ug/L	<10	<10	<10	<10	<5.0	<5.0	<5.0	<5.0	<5.0	<5.1	<5.0	<5.0	<5.0	<5.0
Naphthalene	ug/L	<5.0	<5.1	<5	<5	<5.0	<5.0	<5.0	<5.0	<5.0	<5.1	<5.0	<5.0	<5.0	<5.0
2-Nitroaniline	ug/L	<25	<26	<25	<25	<20	<20	<20	<20	<20	<20	<20	<20	<20	<20
3-Nitroaniline	ug/L	<25	<26	<25	<25	<20	<20	<20	<20	<20	<20	<20	<20	<20	<20
4-Nitroaniline	ug/L	<25	<26	<25	<25	<20	<20	<20	<20	<20	<20	<20	<20	<20	<20
Nitrobenzene {I}	ug/L	<3.0	<3.1	<3	<3	<2.0	<2.0	<2.0	<2.0	<5.0	<2.0	<2.0	<5.0	<2.0	<2.0
2-Nitrophenol	ug/L	<5.0	<5.1	<5	<5	<5.0	<5.0	<5.0	<5.0	<5.0	<5.1	<5.0	<5.0	<5.0	<5.0
4-Nitrophenol	ug/L	<25	<26	<25	<25	<20	<20	<20	<20	<20	<20	<20	<20	<20	<20
n-Nitroso-di-n-propylamine	ug/L	<5.0	<5.1	<5	<5	<5.0	<5.0	<5.0	<5.0	<5.0	<5.1	<5.0	<5.0	<5.0	<5.0

Table 2
Summary of Groundwater Analytical Results
Dunton Park Property
Holland, Michigan

Sample Location		MW-DP-3	MW-DP-3	MW-DP-3	MW-DP-3	MW-DP-3	MW-DP-3	MW-DP-3	MW-DP-3 Dup	MW-DP-3	MW-DP-4	MW-DP-4	MW-DP-4	MW-DP-4	MW-DP-4
Lab Sample ID		0506565-05	0512430-05	0609569-01	0709267-08	0809275-06	0904029-04	1002267-01	1002267-02	1106437-1	0311347-03	0401242-04	0405205-03	0407439-15	0410457-04
Sampled By		Horizon	Horizon	Horizon	Horizon	Horizon	Horizon	Horizon	Horizon	Horizon	Horizon	Horizon	Horizon	Horizon	Horizon
Analyzed By		e-Lab.	e-Lab.	e-Lab.	e-Lab	ALS	ALS	ALS	ALS	ALS	e-Lab	e-Lab	e-Lab	e-Lab	e-Lab.
Sample Date		6/28/2005	12/21/2005	9/28/2006	9/13/2007	9/12/2008	4/1/2009	2/15/2010	2/15/2010	6/15/2011	11/25/2003	1/22/2004	5/11/2004	7/29/2004	10/22/2004
Sample Depth (Ft.)															
Semi-Volatiles Cont.	*Units*														
N-Nitrosodiphenylamine	ug/L	<5.0	<5.1	<5	<5	<5.0	<5.0	<5.0	<5.0	<5.0	<5.1	<5.0	<5.0	<5.0	<5.0
Pentachlorophenol	ug/L	<2.0	<2.1	<2	<2	<20	<2.0	<2.0	<2.0	<20	<20	<20	<20	<20	<20
Phenanthrene	ug/L	<2.0	<2.1	<2	<2	<5.0	<2.0	<2.0	<2.0	<5.0	<5.1	<5.0	<5.0	<5.0	<5.0
Phenol	ug/L	<5.0	<5.1	<5	<5	<5.0	<5.0	<5.0	<5.0	<5.0	<5.1	<5.0	<5.0	<5.0	<5.0
Pyrene	ug/L	<5.0	<5.1	<5	<5	<5.0	<5.0	<5.0	<5.0	<5.0	<5.1	<5.0	<5.0	<5.0	<5.0
1,2,4-Trichlorobenzene	ug/L	<5.0	<5.1	<5	<5	<5.0	<5.0	<5.0	<5.0	<5.0	<5.1	<5.0	<5.0	<5.0	<5.0
2,4,5-Trichlorophenol	ug/L	<5.0	<5.1	<5	<5	<5.0	<5.0	<5.0	<5.0	<5.0	<5.1	<5.0	<5.0	<5.0	<5.0
2,4,6-Trichlorophenol	ug/L	<4.0	<4.1	<4	<4	<4.0	<4.0	<4.0	<4.0	<4.0	<4.0	<4.0	<5.0	<4.0	<4.0
Volatiles	*Units*														
Acetone {I}	ug/L	<50	<50	<50	<50	<50	<25	<25	<25	<25	<25	<25	<20	<25	<25
Benzene {I}	ug/L	<1.0	<1.0	<1	<1	<1.0	<1.0	<1.0	<1.0	<1.0	<1.0	<1.0	<1.0	<1.0	<1.0
Bromodichloromethane	ug/L	<1.0	<1.0	<1	<1	<1.0	<1.0	<1.0	<1.0	<1.0	<1.0	<1.0	<1.0	<1.0	<1.0
Bromoform	ug/L	<1.0	<1.0	<1	<1	<1.0	<1.0	<1.0	<1.0	<1.0	<1.0	<1.0	<1.0	<1.0	<1.0
Bromomethane	ug/L	<5.0	<5.0	<5	<5	<5.0	<1.0	<1.0	<1.0	<1.0	<1.0	<1.0	<1.0	<1.0	<1.0
2-Butanone (MEK) {I}	ug/L	<25	<25	<25	<25	<25	<25	<25	<25	<25	<5.0	<5.0	<5.0	<5.0	<5.0
Carbon disulfide {I,R}	ug/L	<5.0	<5.0	<5	<5	<5.0	<5.0	<5.0	<5.0	<5.0	<2.5	<2.5	<2.5	<2.5	<2.5
Carbon tetrachloride	ug/L	<1.0	<1.0	<1	<1	<1.0	<1.0	<1.0	<1.0	<1.0	<1.0	<1.0	<1.0	<1.0	<1.0
Chlorobenzene {I}	ug/L	**16**	**3.7**	**21**	**17**	**15**	**8.7**	**8.2**	**8.1**	**9.7**	**5.2**	**25**	**3.8**	**3.4**	**3.0**
Chloroethane {I}	ug/L	<5.0	<5.0	<5	<5	<5.0	<1.0	<1.0	<1.0	<1.0	<1.0	<1.0	<1.0	<1.0	<1.0
Chloroform	ug/L	<1.0	<1.0	<1	<1	<1.0	<1.0	<1.0	<1.0	<1.0	<1.0	<1.0	<1.0	<1.0	<1.0
Chloromethane {I}	ug/L	<5.0	<5.0	<5	<5	<5.0	<1.0	<1.0	<1.0	<1.0	<1.0	<1.0	<1.0	<1.0	<1.0
Dibromochloromethane	ug/L	<5.0	<5.0	<5	<5	<5.0	<1.0	<1.0	<1.0	<1.0	<1.0	<1.0	<1.0	<1.0	<1.0
1,1-Dichloroethane {I}	ug/L	<1.0	<1.0	<1	<1	<1.0	<1.0	<1.0	<1.0	<1.0	<1.0	<1.0	<1.0	<1.0	<1.0
1,2-Dichloroethane {I}	ug/L	<1.0	<1.0	<1	<1	<1.0	<1.0	<1.0	<1.0	<1.0	<1.0	<1.0	<1.0	<1.0	<1.0
1,1-Dichloroethylene {I}	ug/L	<1.0	<1.0	<1	<1	<1.0	<1.0	<1.0	<1.0	<1.0	<1.0	<1.0	<1.0	<1.0	<1.0
cis-1,2-Dichloroethylene {I}	ug/L	<1.0	<1.0	<1	<1	<1.0	<1.0	<1.0	<1.0	<1.0	<1.0	<1.0	<1.0	<1.0	**1.0**
1,2-Dichloroethene, Total	ug/L	<1.0	<1.0	<1	<2.0	<1.0	<1.0	<1.0	<1.0	<2.0	<2.0	<2.0	<2.0	<2.0	<2.0
trans-1,2-Dichloroethylene	ug/L	<1.0	<1.0	<1	<1	<1.0	<1.0	<1.0	<1.0	<1.0	<1.0	<1.0	<1.0	<1.0	<1.0
1,2-Dichloropropane {I}	ug/L	<1.0	<1.0	<1	<2.0	<1.0	<1.0	<1.0	<1.0	<1.0	<1.0	<1.0	<1.0	<1.0	<1.0
cis-1,3-Dichloropropene {I,J}	ug/L	<1.0	<1.0	<1	<1	<1.0	<1.0	<1.0	<1.0	<1.0	<1.0	<1.0	<1.0	<1.0	<1.0
trans-1,3-Dichloropropene {I, J}	ug/L	<1.0	<1.0	<1	<1	<1.0	<1.0	<1.0	<1.0	<1.0	<1.0	<1.0	<1.0	<1.0	<1.0
total-1,3-Dichloropropene {I, J}	ug/L	<1.0	<1.0	<1	<2.0	<1.0	<1.0	<1.0	<1.0	<2.0	<2.0	<2.0	<2.0	<2.0	<2.0
Ethylbenzene {I}	ug/L	<1.0	<1.0	<1	<1	<1.0	<1.0	<1.0	<1.0	<1.0	<1.0	<1.0	<1.0	<1.0	<1.0
2-Hexanone {I}	ug/L	<50	<50	<50	<50	<50	<50	<50	<50	<50	<50	<50	<5.0	<50	<50
Methylene chloride	ug/L	<5.0	<5.0	<5	<5	<5.0	<5.0	<5.0	<5.0	<5.0	<5.0	<5.0	<5.0	<5.0	<5.0
4-Methyl-2-pentanone (MIBK) {I}	ug/L	<50	<50	<50	<50	<50	<50	<50	<50	<50	<50	<50	<5.0	<50	<50
Styrene {I}	ug/L	<1.0	<1.0	<1	<1	<1.0	<1.0	<1.0	<1.0	<1.0	<1.0	<1.0	<1.0	<1.0	<1.0
1,1,2,2-Tetrachloroethane	ug/L	<1.0	<1.0	<1	<1	<1.0	<1.0	<1.0	<1.0	<1.0	<1.0	<1.0	<1.0	<1.0	<1.0
Tetrachloroethylene	ug/L	<1.0	<1.0	<1	<2.0	<1.0	<1.0	<1.0	<1.0	<1.0	<1.0	<1.0	<1.0	<1.0	<1.0
Toluene {I}	ug/L	<1.0	<1.0	<1	<1	<1.0	<1.0	<1.0	<1.0	<1.0	<1.0	<1.0	<1.0	<1.0	<1.0
1,1,1-Trichloroethane	ug/L	<1.0	<1.0	<1	<1	<1.0	<1.0	<1.0	<1.0	<1.0	<1.0	<1.0	<1.0	<1.0	<1.0
1,1,2-Trichloroethane	ug/L	<1.0	<1.0	<1	<1	<1.0	<1.0	<1.0	<1.0	<1.0	<1.0	<1.0	<1.0	<1.0	<1.0

Table 2
Summary of Groundwater Analytical Results
Dunton Park Property
Holland, Michigan

Sample Location		MW-DP-3	MW-DP-3	MW-DP-3	MW-DP-3	MW-DP-3	MW-DP-3	MW-DP-3	MW-DP-3 Dup	MW-DP-3	MW-DP-4	MW-DP-4	MW-DP-4	MW-DP-4	MW-DP-4
Lab Sample ID		0506565-05	0512430-05	0609569-01	0709267-08	0809275-06	0904029-04	1002267-01	1002267-02	1106437-1	0311347-03	0401242-04	0405205-03	0407439-15	0410457-04
Sampled By		Horizon	Horizon	Horizon	Horizon	Horizon	Horizon	Horizon	Horizon	Horizon	Horizon	Horizon	Horizon	Horizon	Horizon
Analyzed By		e-Lab.	e-Lab.	e-Lab.	e-Lab	ALS	ALS	ALS	ALS	ALS	e-Lab	e-Lab	e-Lab	e-Lab	e-Lab.
Sample Date		6/28/2005	12/21/2005	9/28/2006	9/13/2007	9/12/2008	4/1/2009	2/15/2010	2/15/2010	6/15/2011	11/25/2003	1/22/2004	5/11/2004	7/29/2004	10/22/2004
Sample Depth (Ft.)															
Volatiles Cont.	*Units*														
Trichloroethylene	ug/L	<1.0	<1.0	<1	<1	<1.0	<1.0	<1.0	<1.0	<1.0	<1.0	<1.0	<1.0	<1.0	<1.0
Vinyl chloride	ug/L	<1.0	<1.0	<1	<1	<1.0	<1.0	<1.0	<1.0	<1.0	<1.0	<1.0	<1.0	<1.0	<1.0
Xylene, o	ug/L	<1.0	<1.0	<1	<2.0	<1.0	<2.0	<2.0	<2.0	<2.0	<2.0	<2.0	<2.0	<2.0	<2.0
Xylene, p&m	ug/L	<1.0	<1.0	<1	<1	<1.0	<1.0	<1.0	<1.0	<1.0	<1.0	<1.0	<1.0	<1.0	<1.0
Xylene (Total)	ug/L	<3.0	<3.0	<3	<3	<1.0	<3.0	<3.0	<3.0	<3.0	<3.0	<3.0	<3.0	<3.0	<3.0

Table 2
Summary of Groundwater Analytical Results
Dunton Park Property
Holland, Michigan

Sample Location		MW-DP-4	MW-DP-4	MW-DP-4	MW-DP-4	MW-DP-4	MW-DP-4	MW-DP-4	MW-DP-4 Dup.	MW-DP-4	MW-DP-4	MW-DP-5	MW-DP-5	MW-DP-5	MW-DP-5
Lab Sample ID		0503405-03	0506565-04	0512430-06	0609569-01	0709267-09	0809275-07	0904029-03	0904029-02	1002267-05	1106437-2	0401093-01	0401242-05	0405205-02	0407439-16
Sampled By		Horizon	Horizon	Horizon	Horizon	Horizon	Horizon	Horizon	Horizon	Horizon	Horizon	Horizon	Horizon	Horizon	Horizon
Analyzed By		e-Lab.	e-Lab.	e-Lab.	e-Lab.	e-Lab	ALS	ALS	ALS	ALS	ALS	e-Lab	e-Lab	e-Lab	e-Lab
Sample Date		3/23/2005	6/28/2005	12/21/2005	9/28/2006	9/13/2007	9/12/2008	4/1/2009	4/1/2009	2/15/2010	6/15/2011	1/9/2004	1/22/2004	5/11/2004	7/29/2004
Sample Depth (Ft.)															
Inorganics	*Units*														
Arsenic {B} Total	mg/L	---	---	---	---	---	---	---	---	---	---	<0.001	---	<0.010	---
Barium Total	mg/L	---	---	---	---	---	---	---	---	---	---	---	---	**0.086**	---
Chromium, Total	mg/L	---	---	---	---	---	---	---	---	---	---	<0.005	---	<0.0050	---
Copper {B} Total	mg/L	---	---	---	---	---	---	---	---	---	---	<0.025	---	<0.020	---
Mercury, Total {B,Z}	mg/L	---	---	---	---	---	---	---	---	---	---	<0.0002	---	<0.00020	---
Selenium {B} Total	mg/L	---	---	---	---	---	---	---	---	---	---	<0.005	---	<0.0020	---
Silver {B} Total	mg/L	---	---	---	---	---	---	---	---	---	---	**0.01**	---	<0.00050	---
Zinc {B} Total	mg/L	---	---	---	---	---	---	---	---	---	---	---	---	<0.010	---
Misc.	*Units*														
Biochemical Oxygen Demand	mg/L	---	---	---	---	---	---	---	---	---	---	---	---	<2.4	---
Carbonaceous Biochemical Oxygen Demand	mg/L	---	---	---	---	---	---	---	---	---	---	---	---	<2.0	---
Chemical Oxygen Demand	mg/L	---	---	---	---	---	---	---	---	---	---	---	---	**20**	---
Nitrogen, Ammonia (total)	mg/L	---	---	---	---	---	---	---	---	---	---	---	---	**2.1**	---
Nitrogen, Ammonia, unionized	mg/L	---	---	---	---	---	---	---	---	---	---	---	---	**0.15**	---
Nitrogen, Nitrate, total{B,N}	mg/L	---	---	---	---	---	---	---	---	---	---	---	---	---	<0.10
PCB's	*Units*														
Aroclor 1016	ug/L	---	---	---	---	---	---	---	---	---	---	<0.20	---	---	---
Aroclor 1221	ug/L	---	---	---	---	---	---	---	---	---	---	<0.20	---	---	---
Aroclor 1232	ug/L	---	---	---	---	---	---	---	---	---	---	<0.20	---	---	---
Aroclor 1242	ug/L	---	---	---	---	---	---	---	---	---	---	<0.20	---	---	---
Aroclor 1248	ug/L	---	---	---	---	---	---	---	---	---	---	<0.20	---	---	---
Aroclor 1254	ug/L	---	---	---	---	---	---	---	---	---	---	<0.20	---	---	---
Aroclor 1260	ug/L	---	---	---	---	---	---	---	---	---	---	<0.20	---	---	---
Semi-Volatiles	*Units*														
Acenaphthene	ug/L	<5.0	<5.0	<5.0	<5	<5	<5.0	<5.0	<5.0	<5.0	<5.0	<5.0	<5.0	<5.0	<5.0
Acenaphthylene	ug/L	<5.0	<5.0	<5.0	<5	<5	<5.0	<5.0	<5.0	<5.0	<5.0	<5.0	<5.0	<5.0	<5.0
Aniline {I}	ug/L	<4.0	<4.0	<4.0	<4	<4	<20	<4.0	<4.0	<4.0	<20	<20	<20	<20	<20
Anthracene	ug/L	<5.0	<5.0	<5.0	<5	<5	<5.0	<5.0	<5.0	<5.0	<5.0	<5.0	<5.0	<5.0	<5.0
Benzo(a)anthracene {Q}	ug/L	<1.0	<1.0	<1.0	<1	<1	<1.0	<1.0	<1.0	<1.0	<1.0	<1.0	<1.0	<5.0	<1.0
Benzo(a)pyrene {Q}	ug/L	<1.0	<1.0	<1.0	<1	<1	<2.0	<1.0	<1.0	<1.0	<2.0	<2.0	<2.0	<5.0	<2.0
Benzo(b)fluoranthene {Q}	ug/L	<1.0	<1.0	<1.0	<1	<1	<2.0	<1.0	<1.0	<1.0	<2.0	<2.0	<2.0	<5.0	<2.0
Benzo(g,h,i)perylene	ug/L	<1.0	<1.0	<1.0	<1	<1	<5.0	<1.0	<1.0	<1.0	<5.0	<5.0	<5.0	<5.0	<5.0
Benzo(k)fluoranthene {Q}	ug/L	<1.0	<1.0	<1.0	<1	<1	<5.0	<1.0	<1.0	<1.0	<5.0	<5.0	<5.0	<5.0	<5.0
Benzophenone	ug/L	<50	<50	<50	<50	<50	<50	<50	<50	<50	<50	<50	<50	<50	<50
bis(2-Chloroethoxy)methane	ug/L	<5.0	<5.0	<5.0	<5	<5	<5.0	<5.0	<5.0	<5.0	<5.0	<5.0	<5.0	<5.0	<5.0
bis(2-Chloroethyl)ether {I}	ug/L	<1.0	<1.0	<1.0	<1	<1	<1.0	<1.0	<1.0	<1.0	<5.0	<1.0	<1.0	<5.0	<1.0
bis(2-Chloroisopropyl)ether	ug/L	<5.0	<5.0	<5.0	<5	<5	<5.0	<5.0	<5.0	<5.0	<5.0	<5.0	<5.0	<5.0	<5.0
bis(2-Ethylhexyl)phthalate	ug/L	**5.8 B**	<5.0	<5.0	<5	<5	<5.0	<5.0	<5.0	<5.0	<5.0	<5.0	<5.0	<5.0	<5.0
4-Bromo diphenyl ether	ug/L	<5.0	<5.0	<5.0	<5	<5	<5.0	<5.0	<5.0	<5.0	<5.0	<5.0	<5.0	<5.0	<5.0
Butyl benzyl phthalate	ug/L	<5.0	<5.0	<5.0	<5	<5	<5.0	<5.0	<5.0	<5.0	<5.0	<5.0	<5.0	<5.0	<5.0
Carbazole	ug/L	<10	<10	<10	<10	<10	<10	<10	<10	<10	<10	<10	<10	<10	<10
4-Chloroaniline	ug/L	<10	<10	<10	<10	<10	<20	<10	<10	<10	<20	<20	<20	<20	<20

Table 2
Summary of Groundwater Analytical Results
Dunton Park Property
Holland, Michigan

Sample Location		MW-DP-4	MW-DP-4	MW-DP-4	MW-DP-4	MW-DP-4	MW-DP-4	MW-DP-4	MW-DP-4 Dup.	MW-DP-4	MW-DP-4	MW-DP-5	MW-DP-5	MW-DP-5	MW-DP-5
Lab Sample ID		0503405-03	0506565-04	0512430-06	0609569-01	0709267-09	0809275-07	0904029-03	0904029-02	1002267-05	1106437-2	0401093-01	0401242-05	0405205-02	0407439-16
Sampled By		Horizon	Horizon	Horizon	Horizon	Horizon	Horizon	Horizon	Horizon	Horizon	Horizon	Horizon	Horizon	Horizon	Horizon
Analyzed By		e-Lab.	e-Lab.	e-Lab.	e-Lab.	e-Lab	ALS	ALS	ALS	ALS	ALS	e-Lab	e-Lab	e-Lab	e-Lab
Sample Date		3/23/2005	6/28/2005	12/21/2005	9/28/2006	9/13/2007	9/12/2008	4/1/2009	4/1/2009	2/15/2010	6/15/2011	1/9/2004	1/22/2004	5/11/2004	7/29/2004
Sample Depth (Ft.)															
Semi-Volatiles Cont.	*Units*														
4-Chloro-3-methylphenol	ug/L	<5.0	<5.0	<5.0	<5	<5	<5.0	<5.0	<5.0	<5.0	<5.0	<5.0	<5.0	<5.0	<5.0
beta-Chloronaphthalene	ug/L	<5.0	<5.0	<5.0	<5	<5	<5.0	<5.0	<5.0	<5.0	<5.0	<5.0	<5.0	<5.0	<5.0
2-Chlorophenol	ug/L	<10	<10	<10	<10	<10	<5.0	<5.0	<5.0	<5.0	<5.0	<5.0	<5.0	<5.0	<5.0
4-Chloro diphenyl ether	ug/L	<5.0	<5.0	<5.0	<5	<5	<5.0	<5.0	<5.0	<5.0	<5.0	<5.0	<5.0	<5.0	<5.0
Chrysene {Q}	ug/L	<1.0	<1.0	<1.0	<1	<1	<5.0	<1.0	<1.0	<1.0	<5.0	<5.0	<5.0	<5.0	<5.0
Dibenzo(a,h)anthracene {Q}	ug/L	<2.0	<2.0	<2.0	<2	<2	<2.0	<2.0	<2.0	<2.0	<5.0	<2.0	<2.0	<5.0	<2.0
Dibenzofuran	ug/L	<4.0	<4.0	<4.0	<4	<4	<5.0	<4.0	<4.0	<4.0	<5.0	<5.0	<5.0	<5.0	<5.0
1,2-Dichlorobenzene	ug/L	<1.0	<1.0	<1.0	<1	<1	<5.0	<1.0	<1.0	<1.0	<1.0	<5.0	<5.0	<5.0	<5.0
1,3-Dichlorobenzene	ug/L	<1.0	<1.0	<1.0	<1	<1	<5.0	<1.0	<1.0	<1.0	<1.0	<5.0	<5.0	<5.0	<5.0
1,4-Dichlorobenzene	ug/L	<1.0	<1.0	<1.0	<1	<1	<5.0	<1.0	<1.0	<1.0	<1.0	<5.0	<5.0	<5.0	<5.0
3,3'-Dichlorobenzidine	ug/L	<0.39	<0.39	<0.39	<0.39	<0.39	<20	<0.39	<0.39	<0.39	<0.30	<20	<20	<20	<20
2,4-Dichlorophenol	ug/L	<10	<10	<10	<10	<10	<10	<10	<10	<10	<10	<10	<10	<10	<10
Diethyl phthalate	ug/L	<5.0	<5.0	<5.0	<5	<5	<20	<5.0	<5.0	<5.0	<5.0	<20	<20	<20	<20
Dimethyl phthalate	ug/L	<5.0	<5.0	<5.0	<5	<5	<20	<5.0	<5.0	<5.0	<5.0	<20	<20	<20	<20
2,4-Dimethylphenol	ug/L	<5.0	<5.0	<5.0	<5	<5	<5.0	<5.0	<5.0	<5.0	<5.0	<5.0	<5.0	<5.0	<5.0
Di-n-butyl phthalate	ug/L	<5.0	<5.0	<5.0	<5	<5	<5.0	<5.0	<5.0	<5.0	<5.0	<5.0	<5.0	<5.0	<5.0
2,4-Dinitrophenol	ug/L	<25	<25	<25	<25	<25	<20	<20	<20	<20	<20	<20	<20	<20	<20
2,4-Dinitrotoluene	ug/L	<5.0	<5.0	<5.0	<5	<5	<5.0	<5.0	<5.0	<5.0	<5.0	<5.0	<5.0	<5.0	<5.0
2,6-Dinitrotoluene	ug/L	<5.0	<5.0	<5.0	<5	<5	<5.0	<5.0	<5.0	<5.0	<5.0	<5.0	<5.0	<5.0	<5.0
Di-n-octyl phthalate	ug/L	<5.0	<5.0	<5.0	<5	<5	<5.0	<5.0	<5.0	<5.0	<5.0	<5.0	<5.0	<5.0	<5.0
5,5-Diphenylhydantoin	ug/L	**38**	<30	<30	<30	<30	<30	<30	<30	<30	<15	<30	<30	<30	<30
Fluoranthene	ug/L	<1.0	<1.0	<1.0	<1	<1	<5.0	<1.0	<1.0	<1.0	<5.0	<5.0	<5.0	<5.0	<5.0
Fluorene	ug/L	<5.0	<5.0	<5.0	<5	<5	<5.0	<5.0	<5.0	<5.0	<5.0	<5.0	<5.0	<5.0	<5.0
Hexachlorobenzene (C-66)	ug/L	<0.20	<0.20	<0.20	<0.2	<0.2	<5.0	<0.20	<0.20	<0.20	<5.0	<5.0	<5.0	<5.0	<5.0
Hexachlorobutadiene (C-46)	ug/L	<0.20	<0.20	<0.20	<0.3	<0.3	<5.0	<0.30	<0.30	<0.30	<5.0	<5.0	<5.0	<5.0	<5.0
Hexachlorocyclopentadiene (C-56)	ug/L	<5.0	<5.0	<5.0	<5	<5	<5.0	<5.0	<5.0	<5.0	<5.0	<5.0	<5.0	<5.0	<5.0
Hexachloroethane	ug/L	<5.0	<5.0	<5.0	<5	<5	<5.0	<5.0	<5.0	<5.0	<5.0	<5.0	<5.0	<5.0	<5.0
Indeno(1,2,3-cd)pyrene {Q}	ug/L	<2.0	<2.0	<2.0	<2	<2	<2.0	<2.0	<2.0	<2.0	<2.0	<2.0	<2.0	<5.0	<2.0
Isophorone	ug/L	<5.0	<5.0	<5.0	<5	<5	<5.0	<5.0	<5.0	<5.0	<5.0	<5.0	<5.0	<5.0	<5.0
2-Methyl-4,6-dinitrophenol	ug/L	<20	<20	<20	<20	<20	<20	<20	<20	<20	<20	<20	<20	<20	<20
2-Methylnaphthalene	ug/L	<5.0	<5.0	<5.0	<5	<5	<5.0	<5.0	<5.0	<5.0	<5.0	<5.0	<5.0	<5.0	<5.0
2-Methylphenol {J}	ug/L	<10	<10	<10	<10	<10	<5.0	<5.0	<5.0	<5.0	<5.0	<5.0	<5.0	<5.0	<5.0
3-Methylphenol {J}	ug/L	---	---	---	---	---	---	---	---	---	---	---	---	---	---
4-Methylphenol {J}	ug/L	<10	<10	<10	<10	<10	<5.0	<5.0	<5.0	<5.0	<5.0	<5.0	<5.0	<5.0	<5.0
Naphthalene	ug/L	<5.0	<5.0	<5.0	<5	<5	<5.0	<5.0	<5.0	<5.0	<5.0	<5.0	<5.0	<5.0	<5.0
2-Nitroaniline	ug/L	<25	<25	<25	<25	<25	<20	<20	<20	<20	<20	<20	<20	<20	<20
3-Nitroaniline	ug/L	<25	<25	<25	<25	<25	<20	<20	<20	<20	<20	<20	<20	<20	<20
4-Nitroaniline	ug/L	<25	<25	<25	<25	<25	<20	<20	<20	<20	<20	<20	<20	<20	<20
Nitrobenzene {I}	ug/L	<3.0	<3.0	<3.0	<3	<3	<2.0	<2.0	<2.0	<2.0	<5.0	<2.0	<2.0	<5.0	<2.0
2-Nitrophenol	ug/L	<5.0	<5.0	<5.0	<5	<5	<5.0	<5.0	<5.0	<5.0	<5.0	<5.0	<5.0	<5.0	<5.0
4-Nitrophenol	ug/L	<25	<25	<25	<25	<25	<20	<20	<20	<20	<20	<20	<20	<20	<20
n-Nitroso-di-n-propylamine	ug/L	<5.0	<5.0	<5.0	<5	<5	<5.0	<5.0	<5.0	<5.0	<5.0	<5.0	<5.0	<5.0	<5.0

Table 2
Summary of Groundwater Analytical Results
Dunton Park Property
Holland, Michigan

Sample Location		MW-DP-4	MW-DP-4	MW-DP-4	MW-DP-4	MW-DP-4	MW-DP-4	MW-DP-4	MW-DP-4 Dup.	MW-DP-4	MW-DP-4	MW-DP-5	MW-DP-5	MW-DP-5	MW-DP-5
Lab Sample ID		0503405-03	0506565-04	0512430-06	0609569-01	0709267-09	0809275-07	0904029-03	0904029-02	1002267-05	1106437-2	0401093-01	0401242-05	0405205-02	0407439-16
Sampled By		Horizon	Horizon	Horizon	Horizon	Horizon	Horizon	Horizon	Horizon	Horizon	Horizon	Horizon	Horizon	Horizon	Horizon
Analyzed By		e-Lab.	e-Lab.	e-Lab.	e-Lab.	e-Lab	ALS	ALS	ALS	ALS	ALS	e-Lab	e-Lab	e-Lab	e-Lab
Sample Date		3/23/2005	6/28/2005	12/21/2005	9/28/2006	9/13/2007	9/12/2008	4/1/2009	4/1/2009	2/15/2010	6/15/2011	1/9/2004	1/22/2004	5/11/2004	7/29/2004
Sample Depth (Ft.)															
Semi-Volatiles Cont.	*Units*														
N-Nitrosodiphenylamine	ug/L	<5.0	<5.0	<5.0	<5	<5	<5.0	<5.0	<5.0	<5.0	<5.0	<5.0	<5.0	<5.0	<5.0
Pentachlorophenol	ug/L	<2.0	<2.0	<2.0	<2	<2	<20	<2.0	<2.0	<2.0	<20	<20	<20	<20	<20
Phenanthrene	ug/L	<2.0	<2.0	<2.0	<2	<2	<5.0	<2.0	<2.0	<2.0	<5.0	<5.0	<5.0	<5.0	<5.0
Phenol	ug/L	<5.0	<5.0	<5.0	<5	<5	<5.0	<5.0	<5.0	<5.0	<5.0	<5.0	<5.0	<5.0	<5.0
Pyrene	ug/L	<5.0	<5.0	<5.0	<5	<5	<5.0	<5.0	<5.0	<5.0	<5.0	<5.0	<5.0	<5.0	<5.0
1,2,4-Trichlorobenzene	ug/L	<5.0	<5.0	<5.0	<5	<5	<5.0	<5.0	<5.0	<5.0	<5.0	<5.0	<5.0	<5.0	<5.0
2,4,5-Trichlorophenol	ug/L	<5.0	<5.0	<5.0	<5	<5	<5.0	<5.0	<5.0	<5.0	<5.0	<5.0	<5.0	<5.0	<5.0
2,4,6-Trichlorophenol	ug/L	<4.0	<4.0	<4.0	<4	<4	<4.0	<4.0	<4.0	<4.0	<4.0	<4.0	<4.0	<5.0	<4.0
Volatiles	*Units*														
Acetone {I}	ug/L	<50	<50	<50	<50	<50	<50	<25	<25	<25	<25	<25	<25	<20	<25
Benzene {I}	ug/L	<1.0	<1.0	<1.0	<1	<1	<1.0	<1.0	<1.0	<1.0	<1.0	<1.0	<1.0	<1.0	<1.0
Bromodichloromethane	ug/L	<1.0	<1.0	<1.0	<1	<1	<1.0	<1.0	<1.0	<1.0	<1.0	<1.0	<1.0	<1.0	<1.0
Bromoform	ug/L	<1.0	<1.0	<1.0	<1	<1	<1.0	<1.0	<1.0	<1.0	<1.0	<1.0	<1.0	<1.0	<1.0
Bromomethane	ug/L	<5.0	<5.0	<5.0	<5	<5	<5.0	<1.0	<1.0	<1.0	<1.0	<1.0	<1.0	<1.0	<1.0
2-Butanone (MEK) {I}	ug/L	<25	<25	<25	<25	<25	<25	<25	<25	<25	<25	<5.0	<5.0	<5.0	<5.0
Carbon disulfide {I,R}	ug/L	<5.0	<5.0	<5.0	<5	<5	<5.0	<5.0	<5.0	<5.0	<5.0	<2.5	<2.5	<2.5	<2.5
Carbon tetrachloride	ug/L	<1.0	<1.0	<1.0	<1	<1	<1.0	<1.0	<1.0	<1.0	<1.0	<1.0	<1.0	<1.0	<1.0
Chlorobenzene {I}	ug/L	**3.6**	**1.6**	<1.0	**3.0**	**2.8**	**2.5**	**1.6**	**1.6**	**1.8**	**1.5**	**4.4**	**5.7**	**4.5**	**4.4**
Chloroethane {I}	ug/L	<5.0	<5.0	<5.0	<5	<5	<5.0	<1.0	<1.0	<1.0	<1.0	<1.0	<1.0	<1.0	<1.0
Chloroform	ug/L	<1.0	<1.0	<1.0	<1	<1	<1.0	<1.0	<1.0	<1.0	<1.0	<1.0	<1.0	<1.0	<1.0
Chloromethane {I}	ug/L	<5.0	<5.0	<5.0	<5	<5	<5.0	<1.0	<1.0	<1.0	<1.0	<1.0	<1.0	<1.0	<1.0
Dibromochloromethane	ug/L	<5.0	<5.0	<5.0	<5	<5	<5.0	<1.0	<1.0	<1.0	<1.0	<1.0	<1.0	<1.0	<1.0
1,1-Dichloroethane {I}	ug/L	<1.0	<1.0	<1.0	<1	<1	<1.0	<1.0	<1.0	<1.0	<1.0	<1.0	<1.0	<1.0	<1.0
1,2-Dichloroethane {I}	ug/L	<1.0	<1.0	<1.0	<1	<1	<1.0	<1.0	<1.0	<1.0	<1.0	<1.0	<1.0	<1.0	<1.0
1,1-Dichloroethylene {I}	ug/L	<1.0	<1.0	<1.0	<1	<1	<1.0	<1.0	<1.0	<1.0	<1.0	<1.0	<1.0	<1.0	<1.0
cis-1,2-Dichloroethylene {I}	ug/L	<1.0	<1.0	<1.0	<1	<1	**1.3**	**1.2**	**1.2**	**1.3**	**2.8**	**3.5**	**4.8**	**3.3**	**2.6**
1,2-Dichloroethene, Total	ug/L	<1.0	<1.0	<1.0	<1	<2.0	**1.3**	**1.2**	**1.2**	**1.3**	**2.8**	**3.5**	**4.8**	**3.3**	**2.6**
trans-1,2-Dichloroethylene	ug/L	<1.0	<1.0	<1.0	<1	<1	<1.0	<1.0	<1.0	<1.0	<1.0	<1.0	<1.0	<1.0	<1.0
1,2-Dichloropropane {I}	ug/L	<1.0	<1.0	<1.0	<1	<2.0	<1.0	<1.0	<1.0	<1.0	<1.0	<1.0	<1.0	<1.0	<1.0
cis-1,3-Dichloropropene {I,J}	ug/L	<1.0	<1.0	<1.0	<1	<1	<1.0	<1.0	<1.0	<1.0	<1.0	<1.0	<1.0	<1.0	<1.0
trans-1,3-Dichloropropene {I, J}	ug/L	<1.0	<1.0	<1.0	<1	<1	<1.0	<1.0	<1.0	<1.0	<1.0	<1.0	<1.0	<1.0	<1.0
total-1,3-Dichloropropene {I, J}	ug/L	<1.0	<1.0	<1.0	<1	<2.0	<1.0	<1.0	<1.0	<1.0	<2.0	<2.0	<2.0	<2.0	<2.0
Ethylbenzene {I}	ug/L	<1.0	<1.0	<1.0	<1	<1	<1.0	<1.0	<1.0	<1.0	<1.0	<1.0	<1.0	<1.0	<1.0
2-Hexanone {I}	ug/L	<50	<50	<50	<50	<50	<50	<50	<50	<50	<50	<50	<50	<5.0	<50
Methylene chloride	ug/L	<5.0	<5.0	<5.0	<5	<5	<5.0	<5.0	<5.0	<5.0	<5.0	<5.0	<5.0	<5.0	<5.0
4-Methyl-2-pentanone (MIBK) {I}	ug/L	<50	<50	<50	<50	<50	<50	<50	<50	<50	<50	<50	<50	<5.0	<50
Styrene {I}	ug/L	<1.0	<1.0	<1.0	<1	<1	<1.0	<1.0	<1.0	<1.0	<1.0	<1.0	<1.0	<1.0	<1.0
1,1,2,2-Tetrachloroethane	ug/L	<1.0	<1.0	<1.0	<1	<1	<1.0	<1.0	<1.0	<1.0	<1.0	<1.0	<1.0	<1.0	<1.0
Tetrachloroethylene	ug/L	<1.0	<1.0	<1.0	<1	<2.0	<1.0	<1.0	<1.0	<1.0	<1.0	<1.0	<1.0	<1.0	<1.0
Toluene {I}	ug/L	<1.0	<1.0	<1.0	<1	<1	<1.0	<1.0	<1.0	<1.0	<1.0	<1.0	<1.0	<1.0	<1.0
1,1,1-Trichloroethane	ug/L	<1.0	<1.0	<1.0	<1	<1	<1.0	<1.0	<1.0	<1.0	<1.0	<1.0	<1.0	<1.0	<1.0
1,1,2-Trichloroethane	ug/L	<1.0	<1.0	<1.0	<1	<1	<1.0	<1.0	<1.0	<1.0	<1.0	<1.0	<1.0	<1.0	<1.0

Table 2
Summary of Groundwater Analytical Results
Dunton Park Property
Holland, Michigan

Sample Location		MW-DP-4	MW-DP-4	MW-DP-4	MW-DP-4	MW-DP-4	MW-DP-4	MW-DP-4	MW-DP-4 Dup.	MW-DP-4	MW-DP-4	MW-DP-5	MW-DP-5	MW-DP-5	MW-DP-5
Lab Sample ID		0503405-03	0506565-04	0512430-06	0609569-01	0709267-09	0809275-07	0904029-03	0904029-02	1002267-05	1106437-2	0401093-01	0401242-05	0405205-02	0407439-16
Sampled By		Horizon	Horizon	Horizon	Horizon	Horizon	Horizon	Horizon	Horizon	Horizon	Horizon	Horizon	Horizon	Horizon	Horizon
Analyzed By		e-Lab.	e-Lab.	e-Lab.	e-Lab.	e-Lab	ALS	ALS	ALS	ALS	ALS	e-Lab	e-Lab	e-Lab	e-Lab
Sample Date		3/23/2005	6/28/2005	12/21/2005	9/28/2006	9/13/2007	9/12/2008	4/1/2009	4/1/2009	2/15/2010	6/15/2011	1/9/2004	1/22/2004	5/11/2004	7/29/2004
Sample Depth (Ft.)															
Volatiles Cont.	*Units*														
Trichloroethylene	ug/L	<1.0	<1.0	<1.0	<1	<1	<1.0	<1.0	<1.0	<1.0	<1.0	<1.0	<1.0	<1.0	<1.0
Vinyl chloride	ug/L	<1.0	<1.0	<1.0	<1	<1	<1.0	<1.0	<1.0	<1.0	**1.3**	<1.0	<1.0	<1.0	<1.0
Xylene, o	ug/L	<1.0	<1.0	<1.0	<1	<2.0	<1.0	<2.0	<2.0	<2.0	<2.0	<2.0	<2.0	<2.0	<2.0
Xylene, p&m	ug/L	<1.0	<1.0	<1.0	<1	<1	<1.0	<1.0	<1.0	<1.0	<1.0	<1.0	<1.0	<1.0	<1.0
Xylene (Total)	ug/L	<3.0	<3.0	<3.0	<3	<3	<1.0	<3.0	<3.0	<3.0	<3.0	<3.0	<3.0	<3.0	<3.0

Table 2
Summary of Groundwater Analytical Results
Dunton Park Property
Holland, Michigan

Sample Location		MW-DP-5	MW-DP-5	MW-DP-5	MW-DP-5	MW-DP-5	MW-DP-5	MW-DP-5	MW-DP-5	MW-DP-5	MW-DP-5
Lab Sample ID		0410457-05	0503423-04	0506565-03	0512411-05	0609569-01	0709267-10	0809275-03	0904029-01	1002267-06	1106437-3
Sampled By		Horizon	Horizon	Horizon	Horizon	Horizon	Horizon	Horizon	Horizon	Horizon	Horizon
Analyzed By		e-Lab.	e-Lab.	e-Lab.	e-Lab.	e-Lab.	e-Lab	ALS	ALS	ALS	ALS
Sample Date		10/22/2004	3/24/2005	6/28/2005	12/20/2005	9/28/2006	9/13/2007	9/10/2008	4/1/2009	2/15/2010	6/15/2011
Sample Depth (Ft.)											
Inorganics	*Units*										
Arsenic {B} Total	mg/L	---	---	---	---	---	---	---	---	---	---
Barium Total	mg/L	---	---	---	---	---	---	---	---	---	---
Chromium, Total	mg/L	---	---	---	---	---	---	---	---	---	---
Copper {B} Total	mg/L	---	---	---	---	---	---	---	---	---	---
Mercury, Total {B,Z}	mg/L	---	---	---	---	---	---	---	---	---	---
Selenium {B} Total	mg/L	---	---	---	---	---	---	---	---	---	---
Silver {B} Total	mg/L	---	---	---	---	---	---	---	---	---	---
Zinc {B} Total	mg/L	---	---	---	---	---	---	---	---	---	---
Misc.	*Units*										
Biochemical Oxygen Demand	mg/L	---	---	---	---	---	---	---	---	---	---
Carbonaceous Biochemical Oxygen Demand	mg/L	---	---	---	---	---	---	---	---	---	---
Chemical Oxygen Demand	mg/L	---	---	---	---	---	---	---	---	---	---
Nitrogen, Ammonia (total)	mg/L	---	---	---	---	---	---	---	---	---	---
Nitrogen, Ammonia, unionized	mg/L	---	---	---	---	---	---	---	---	---	---
Nitrogen, Nitrate, total{B,N}	mg/L	---	---	---	---	---	---	---	---	---	---
PCB's	*Units*										
Aroclor 1016	ug/L	---	---	---	---	---	---	---	---	---	---
Aroclor 1221	ug/L	---	---	---	---	---	---	---	---	---	---
Aroclor 1232	ug/L	---	---	---	---	---	---	---	---	---	---
Aroclor 1242	ug/L	---	---	---	---	---	---	---	---	---	---
Aroclor 1248	ug/L	---	---	---	---	---	---	---	---	---	---
Aroclor 1254	ug/L	---	---	---	---	---	---	---	---	---	---
Aroclor 1260	ug/L	---	---	---	---	---	---	---	---	---	---
Semi-Volatiles	*Units*										
Acenaphthene	ug/L	<5.0	<5.0	<5.2	<5.0	<5	<5	<5.0	<5.0	<5.0	<5.0
Acenaphthylene	ug/L	<5.0	<5.0	<5.2	<5.0	<5	<5	<5.0	<5.0	<5.0	<5.0
Aniline {I}	ug/L	<20	<4.0	<4.2	<4.0	<4	<4	<20	<4.0	<4.0	<20
Anthracene	ug/L	<5.0	<5.0	<5.2	<5.0	<5	<5	<5.0	<5.0	<5.0	<5.0
Benzo(a)anthracene {Q}	ug/L	<1.0	<1.0	<1.0	<1.0	<1	<1	<1.0	<1.0	<1.0	<1.0
Benzo(a)pyrene {Q}	ug/L	<2.0	<1.0	<1.0	<1.0	<1	<1	<2.0	<1.0	<1.0	<2.0
Benzo(b)fluoranthene {Q}	ug/L	<2.0	<1.0	<1.0	<1.0	<1	<1	<2.0	<1.0	<1.0	<2.0
Benzo(g,h,i)perylene	ug/L	<5.0	<1.0	<1.0	<1.0	<1	<1	<5.0	<1.0	<1.0	<5.0
Benzo(k)fluoranthene {Q}	ug/L	<5.0	<1.0	<1.0	<1.0	<1	<1	<5.0	<1.0	<1.0	<5.0
Benzophenone	ug/L	<50	<50	<52	<50	<50	<50	<50	<50	<50	<50
bis(2-Chloroethoxy)methane	ug/L	<5.0	<5.0	<5.2	<5.0	<5	<5	<5.0	<5.0	<5.0	<5.0
bis(2-Chloroethyl)ether {I}	ug/L	<1.0	<1.0	<1.0	<1.0	<1	<1	<1.0	<1.0	<1.0	<5.0
bis(2-Chloroisopropyl)ether	ug/L	<5.0	<5.0	<5.2	<5.0	<5	<5	<5.0	<5.0	<5.0	<5.0
bis(2-Ethylhexyl)phthalate	ug/L	<5.0	<5.0	<5.2	<5.0	<5	<5	<5.0	<5.0	<5.0	<5.0
4-Bromo diphenyl ether	ug/L	<5.0	<5.0	<5.2	<5.0	<5	<5	<5.0	<5.0	<5.0	<5.0
Butyl benzyl phthalate	ug/L	<5.0	<5.0	<5.2	<5.0	<5	<5	<5.0	<5.0	<5.0	<5.0
Carbazole	ug/L	<10	<10	<10	<10	<10	<10	<10	<10	<10	<10
4-Chloroaniline	ug/L	<20	<10	<10	<10	<10	<10	<20	<10	<10	<20

Table 2
Summary of Groundwater Analytical Results
Dunton Park Property
Holland, Michigan

Sample Location Lab Sample ID Sampled By Analyzed By Sample Date Sample Depth (Ft.)		MW-DP-5 0410457-05 Horizon e-Lab. 10/22/2004	MW-DP-5 0503423-04 Horizon e-Lab. 3/24/2005	MW-DP-5 0506565-03 Horizon e-Lab. 6/28/2005	MW-DP-5 0512411-05 Horizon e-Lab. 12/20/2005	MW-DP-5 0609569-01 Horizon e-Lab. 9/28/2006	MW-DP-5 0709267-10 Horizon e-Lab 9/13/2007	MW-DP-5 0809275-03 Horizon ALS 9/10/2008	MW-DP-5 0904029-01 Horizon ALS 4/1/2009	MW-DP-5 1002267-06 Horizon ALS 2/15/2010	MW-DP-5 1106437-3 Horizon ALS 6/15/2011
Semi-Volatiles Cont.	*Units*										
4-Chloro-3-methylphenol	ug/L	<5.0	<5.0	<5.2	<5.0	<5	<5	<5.0	<5.0	<5.0	<5.0
beta-Chloronaphthalene	ug/L	<5.0	<5.0	<5.2	<5.0	<5	<5	<5.0	<5.0	<5.0	<5.0
2-Chlorophenol	ug/L	<5.0	<10	<10	<10	<10	<10	<5.0	<5.0	<5.0	<5.0
4-Chloro diphenyl ether	ug/L	<5.0	<5.0	<5.2	<5.0	<5	<5	<5.0	<5.0	<5.0	<5.0
Chrysene {Q}	ug/L	<5.0	<1.0	<1.0	<1.0	<1	<1	<5.0	<1.0	<1.0	<5.0
Dibenzo(a,h)anthracene {Q}	ug/L	<2.0	<2.0	<2.1	<2.0	<2	<2	<2.0	<2.0	<2.0	<5.0
Dibenzofuran	ug/L	<5.0	<4.0	<4.2	<4.0	<4	<4	<5.0	<4.0	<4.0	<5.0
1,2-Dichlorobenzene	ug/L	<5.0	<1.0	<1.0	<1.0	<1	<1	<5.0	<1.0	<1.0	<1.0
1,3-Dichlorobenzene	ug/L	<5.0	<1.0	<1.0	<1.0	<1	<1	<5.0	<1.0	<1.0	<1.0
1,4-Dichlorobenzene	ug/L	<5.0	<1.0	<1.0	<1.0	<1	<1	<5.0	<1.0	<1.0	<1.0
3,3'-Dichlorobenzidine	ug/L	<20	<0.39	<0.41	<0.39	<0.39	<0.39	<20	<0.39	<0.39	<0.30
2,4-Dichlorophenol	ug/L	<10	<10	<10	<10	<10	<10	<10	<10	<10	<10
Diethyl phthalate	ug/L	<20	<5.0	<5.2	<5.0	<5	<5	<20	<5.0	<5.0	<5.0
Dimethyl phthalate	ug/L	<20	<5.0	<5.2	<5.0	<5	<5	<20	<5.0	<5.0	<5.0
2,4-Dimethylphenol	ug/L	<5.0	<5.0	<5.2	<5.0	<5	<5	<5.0	<5.0	<5.0	<5.0
Di-n-butyl phthalate	ug/L	<5.0	<5.0	<5.2	<5.0	<5	<5	<5.0	<5.0	<5.0	<5.0
2,4-Dinitrophenol	ug/L	<20	<25	<26	<25	<25	<25	<20	<20	<20	<20
2,4-Dinitrotoluene	ug/L	<5.0	<5.0	<5.2	<5.0	<5	<5	<5.0	<5.0	<5.0	<5.0
2,6-Dinitrotoluene	ug/L	<5.0	<5.0	<5.2	<5.0	<5	<5	<5.0	<5.0	<5.0	<5.0
Di-n-octyl phthalate	ug/L	<5.0	<5.0	<5.2	<5.0	<5	<5	<5.0	<5.0	<5.0	<5.0
5,5-Diphenylhydantoin	ug/L	<30	**37**	<31	<30	<30	<30	<30	<30	<30	**19**
Fluoranthene	ug/L	<5.0	<1.0	<1.0	<1.0	<1	<1	<5.0	<1.0	<1.0	<5.0
Fluorene	ug/L	<5.0	<5.0	<5.2	<5.0	<5	<5	<5.0	<5.0	<5.0	<5.0
Hexachlorobenzene (C-66)	ug/L	<5.0	<0.20	<0.21	<0.20	<0.2	<0.2	<5.0	<0.20	<0.20	<5.0
Hexachlorobutadiene (C-46)	ug/L	<5.0	<0.20	<0.21	<0.20	<0.3	<0.3	<5.0	<0.30	<0.30	<5.0
Hexachlorocyclopentadiene (C-56)	ug/L	<5.0	<5.0	<5.2	<5.0	<5	<5	<5.0	<5.0	<5.0	<5.0
Hexachloroethane	ug/L	<5.0	<5.0	<5.2	<5.0	<5	<5	<5.0	<5.0	<5.0	<5.0
Indeno(1,2,3-cd)pyrene {Q}	ug/L	<2.0	<2.0	<2.1	<2.0	<2	<2	<2.0	<2.0	<2.0	<2.0
Isophorone	ug/L	<5.0	<5.0	<5.2	<5.0	<5	<5	<5.0	<5.0	<5.0	<5.0
2-Methyl-4,6-dinitrophenol	ug/L	<20	<20	<21	<20	<20	<20	<20	<20	<20	<20
2-Methylnaphthalene	ug/L	<5.0	<5.0	<5.2	<5.0	<5	<5	<5.0	<5.0	<5.0	<5.0
2-Methylphenol {J}	ug/L	<5.0	<10	<10	<10	<10	<10	<5.0	<5.0	<5.0	<5.0
3-Methylphenol {J}	ug/L	---	---	---	---	---	---	---	---	---	---
4-Methylphenol {J}	ug/L	<5.0	<10	<10	<10	<10	<10	<5.0	<5.0	<5.0	<5.0
Naphthalene	ug/L	<5.0	<5.0	<5.2	<5.0	<5	<5	<5.0	<5.0	<5.0	<5.0
2-Nitroaniline	ug/L	<20	<25	<26	<25	<25	<25	<20	<20	<20	<20
3-Nitroaniline	ug/L	<20	<25	<26	<25	<25	<25	<20	<20	<20	<20
4-Nitroaniline	ug/L	<20	<25	<26	<25	<25	<25	<20	<20	<20	<20
Nitrobenzene {I}	ug/L	<2.0	<3.0	<3.1	<3.0	<3	<3	<2.0	<2.0	<2.0	<5.0
2-Nitrophenol	ug/L	<5.0	<5.0	<5.2	<5.0	<5	<5	<5.0	<5.0	<5.0	<5.0
4-Nitrophenol	ug/L	<20	<25	<26	<25	<25	<25	<20	<20	<20	<20
n-Nitroso-di-n-propylamine	ug/L	<5.0	<5.0	<5.2	<5.0	<5	<5	<5.0	<5.0	<5.0	<5.0

Table 2
Summary of Groundwater Analytical Results
Dunton Park Property
Holland, Michigan

Sample Location		MW-DP-5	MW-DP-5	MW-DP-5	MW-DP-5	MW-DP-5	MW-DP-5	MW-DP-5	MW-DP-5	MW-DP-5	MW-DP-5
Lab Sample ID		0410457-05	0503423-04	0506565-03	0512411-05	0609569-01	0709267-10	0809275-03	0904029-01	1002267-06	1106437-3
Sampled By		Horizon	Horizon	Horizon	Horizon	Horizon	Horizon	Horizon	Horizon	Horizon	Horizon
Analyzed By		e-Lab.	e-Lab.	e-Lab.	e-Lab.	e-Lab.	e-Lab	ALS	ALS	ALS	ALS
Sample Date		10/22/2004	3/24/2005	6/28/2005	12/20/2005	9/28/2006	9/13/2007	9/10/2008	4/1/2009	2/15/2010	6/15/2011
Sample Depth (Ft.)											
Semi-Volatiles Cont.	*Units*										
N-Nitrosodiphenylamine	ug/L	<5.0	<5.0	<5.2	<5.0	<5	<5	<5.0	<5.0	<5.0	<5.0
Pentachlorophenol	ug/L	<20	<2.0	<2.1	<2.0	<2	<2	<20	<2.0	<2.0	<20
Phenanthrene	ug/L	<5.0	<2.0	<2.1	<2.0	<2	<2	<5.0	<2.0	<2.0	<5.0
Phenol	ug/L	<5.0	<5.0	<5.2	<5.0	<5	<5	<5.0	<5.0	<5.0	<5.0
Pyrene	ug/L	<5.0	<5.0	<5.2	<5.0	<5	<5	<5.0	<5.0	<5.0	<5.0
1,2,4-Trichlorobenzene	ug/L	<5.0	<5.0	<5.2	<5.0	<5	<5	<5.0	<5.0	<5.0	<5.0
2,4,5-Trichlorophenol	ug/L	<5.0	<5.0	<5.2	<5.0	<5	<5	<5.0	<5.0	<5.0	<5.0
2,4,6-Trichlorophenol	ug/L	<4.0	<4.0	<4.2	<4.0	<4	<4	<4.0	<4.0	<4.0	<4.0
Volatiles	*Units*										
Acetone {I}	ug/L	<25	<50	<50	<50	<50	<50	<50	<25	<25	<25
Benzene {I}	ug/L	<1.0	<1.0	<1.0	<1.0	<1	<1	<1.0	<1.0	<1.0	<1.0
Bromodichloromethane	ug/L	<1.0	<1.0	<1.0	<1.0	<1	<1	<1.0	<1.0	<1.0	<1.0
Bromoform	ug/L	<1.0	<1.0	<1.0	<1.0	<1	<1	<1.0	<1.0	<1.0	<1.0
Bromomethane	ug/L	<1.0	<5.0	<5.0	<5.0	<5	<5	<5.0	<1.0	<1.0	<1.0
2-Butanone (MEK) {I}	ug/L	<5.0	<25	<25	<25	<25	<25	<25	<25	<25	<25
Carbon disulfide {I,R}	ug/L	<2.5	<5.0	<5.0	<5.0	<5	<5	<5.0	<5.0	<5.0	<5.0
Carbon tetrachloride	ug/L	<1.0	<1.0	<1.0	<1.0	<1	<1	<1.0	<1.0	<1.0	<1.0
Chlorobenzene {I}	ug/L	**4.0**	**5.4**	**3.4**	**2.7**	**4.4**	**3.8**	**3.4**	**2.2**	**3.7**	**3.9**
Chloroethane {I}	ug/L	<1.0	<5.0	<5.0	<5.0	<5	<5	<5.0	<1.0	<1.0	<1.0
Chloroform	ug/L	<1.0	<1.0	<1.0	<1.0	<1	<1	<1.0	<1.0	<1.0	<1.0
Chloromethane {I}	ug/L	<1.0	<5.0	<5.0	<5.0	<5	<5	<5.0	<1.0	<1.0	<1.0
Dibromochloromethane	ug/L	<1.0	<5.0	<5.0	<5.0	<5	<5	<5.0	<1.0	<1.0	<1.0
1,1-Dichloroethane {I}	ug/L	<1.0	<1.0	<1.0	<1.0	<1	<1	<1.0	<1.0	<1.0	<1.0
1,2-Dichloroethane {I}	ug/L	<1.0	<1.0	<1.0	<1.0	<1	<1	<1.0	<1.0	<1.0	<1.0
1,1-Dichloroethylene {I}	ug/L	<1.0	<1.0	<1.0	<1.0	<1	<1	<1.0	<1.0	<1.0	<1.0
cis-1,2-Dichloroethylene {I}	ug/L	**3.3**	**1.7**	**1.6**	<1.0	**1.4**	**1.2**	<1.0	<1.0	<1.0	<1.0
1,2-Dichloroethene, Total	ug/L	**3.3**	**1.7**	**1.6**	<1.0	**1.4**	<2.0	<1.0	<1.0	<1.0	<2.0
trans-1,2-Dichloroethylene	ug/L	<1.0	<1.0	<1.0	<1.0	<1	<1	<1.0	<1.0	<1.0	<1.0
1,2-Dichloropropane {I}	ug/L	<1.0	<1.0	<1.0	<1.0	<1	<2.0	<1.0	<1.0	<1.0	<1.0
cis-1,3-Dichloropropene {I,J}	ug/L	<1.0	<1.0	<1.0	<1.0	<1	<1	<1.0	<1.0	<1.0	<1.0
trans-1,3-Dichloropropene {I, J}	ug/L	<1.0	<1.0	<1.0	<1.0	<1	<1	<1.0	<1.0	<1.0	<1.0
total-1,3-Dichloropropene {I, J}	ug/L	<2.0	<1.0	<1.0	<1.0	<1	<2.0	<1.0	<1.0	<1.0	<2.0
Ethylbenzene {I}	ug/L	<1.0	<1.0	<1.0	<1.0	<1	<1	<1.0	<1.0	<1.0	<1.0
2-Hexanone {I}	ug/L	<50	<50	<50	<50	<50	<50	<50	<50	<50	<50
Methylene chloride	ug/L	<5.0	<5.0	<5.0	<5.0	<5	<5	<5.0	<5.0	<5.0	<5.0
4-Methyl-2-pentanone (MIBK) {I}	ug/L	<50	<50	<50	<50	<50	<50	<50	<50	<50	<50
Styrene {I}	ug/L	<1.0	<1.0	<1.0	<1.0	<1	<1	<1.0	<1.0	<1.0	<1.0
1,1,2,2-Tetrachloroethane	ug/L	<1.0	<1.0	<1.0	<1.0	<1	<1	<1.0	<1.0	<1.0	<1.0
Tetrachloroethylene	ug/L	<1.0	<1.0	<1.0	<1.0	<1	<2.0	<1.0	<1.0	<1.0	<1.0
Toluene {I}	ug/L	<1.0	<1.0	<1.0	<1.0	<1	<1	<1.0	<1.0	<1.0	<1.0
1,1,1-Trichloroethane	ug/L	<1.0	<1.0	<1.0	<1.0	<1	<1	<1.0	<1.0	<1.0	<1.0
1,1,2-Trichloroethane	ug/L	<1.0	<1.0	<1.0	<1.0	<1	<1	<1.0	<1.0	<1.0	<1.0

Table 2
Summary of Groundwater Analytical Results
Dunton Park Property
Holland, Michigan

Sample Location		MW-DP-5	MW-DP-5	MW-DP-5	MW-DP-5	MW-DP-5	MW-DP-5	MW-DP-5	MW-DP-5	MW-DP-5	MW-DP-5
Lab Sample ID		0410457-05	0503423-04	0506565-03	0512411-05	0609569-01	0709267-10	0809275-03	0904029-01	1002267-06	1106437-3
Sampled By		Horizon	Horizon	Horizon	Horizon	Horizon	Horizon	Horizon	Horizon	Horizon	Horizon
Analyzed By		e-Lab.	e-Lab.	e-Lab.	e-Lab.	e-Lab.	e-Lab	ALS	ALS	ALS	ALS
Sample Date		10/22/2004	3/24/2005	6/28/2005	12/20/2005	9/28/2006	9/13/2007	9/10/2008	4/1/2009	2/15/2010	6/15/2011
Sample Depth (Ft.)											
Volatiles Cont.	*Units*										
Trichloroethylene	ug/L	<1.0	<1.0	<1.0	<1.0	<1	<1	<1.0	<1.0	<1.0	<1.0
Vinyl chloride	ug/L	<1.0	<1.0	<1.0	<1.0	<1	<1	<1.0	<1.0	<1.0	<1.0
Xylene, o	ug/L	<2.0	<1.0	<1.0	<1.0	<1	<2.0	<1.0	<2.0	<2.0	<2.0
Xylene, p&m	ug/L	<1.0	<1.0	<1.0	<1.0	<1	<1	<1.0	<1.0	<1.0	<1.0
Xylene (Total)	ug/L	<3.0	<3.0	<3.0	<3.0	<3	<3	<1.0	<3.0	<3.0	<3.0

Table 2
Summary of Groundwater Analytical Results
Dunton Park Property
Holland, Michigan

Footnotes

Criteria from Part 201 RRD Memo, September 28, 2012
» Target Method Detection Limit from MDEQ-ERD Operational Memorandum #2, October 22, 2004

Results Qualifiers:
--- Parameter not analyzed
ND - Parameter not detected
Bolded value denotes parameter detected above detection limit
Shaded values exceed TMDL and Final Acute Value Criteria
Boxes exceed TMDL and Groundwater Surface Water Interface
Underlined values exceed TMDL and Non-Residential Drinking Water Criteria

Criteria Qualifiers:
{A} Criterion is MI Drinking Water Standard
{B} Background, may be substitued if higher than cleanup criterion
{D} Calculated criterion exceeds 100% hence is reduced to 100% or 1.0E+9 ppb
{E} Criterion is the aesthetic DW value
{G} Criterion is dependant upon pH and/or hardness value of the receiving source water.
{I} Hazardous substance may exhibit the characteristic of ignitability
{M} Calculated criterion is below the analytical TDL
{N} The concentrations of all potential sources of nitrate-nitrogen in groundwater used as a source of drinking water must not, when added together, exceed the nitrate DWC of 10,000 ug/L.
{Q} Criteria for carcinogenic PAHs were developed using RPPs to benzo(a)pyrene
{R} Hazardous substance may exhibit the characteristic of reactivity
{S} Criterion defaults to the chemical-specfic water solubility limit
{W} Concentrations of trihalomethanes in GW must be added together to determine compliance with the MI DW standard of 100 ug/L
{X} GSI shown is not protective for surface water that is used as a drinking water source
{AA} Comparison to these criteria may take into account an evaluation of whether the substances are absorbed to particulates rather than dissolved in water
{CC} GSI criteria for unionized ammonia are 29 ug/L and 53 ug/L for coldwater and warmwater streams, respectively
ID = Inadequate data to develop criterion
NA = Criterion or value is not available, or not applicable
NLV = Hazardous substance is not likely to volatilize under most conditions
Calc. = Criterion is dependant upon pH and/or hardness value of the receiving source water.

PURPOSE AND SCOPE

Due to historical activities on the MSUBI Site and the pharmaceutical manufacturing plant historically located on the eastern adjoining property, soil and groundwater at the MSUBI may be contaminated with hazardous substances at concentrations above cleanup criteria developed by the Michigan Department of Environmental Quality (MDEQ). A Below-Grade Permit must be obtained before doing any work that will expose or disturb soil or ground water at the MSUBI Site. This Permit assists in documenting that below-grade activities at the facility are carried out in a manner that: (1) is protective of human health and the environment; (2) assures that residuals generated during the work, if any, are managed and disposed in accordance with applicable law and regulation; (3) prevents exacerbation of existing contamination; and (4) complies with other applicable occupational health, safety and environmental regulations. A Site Health and Safety Plan is also required for any work that will expose or disturb soil or ground water at the MSUBI Site.

PROJECT DESCRIPTION

Provide a brief description of the location, depth and purpose of the below grade work activities.

HEALTH & SAFETY REQUIREMENTS

Projects that will expose or disturb soil or ground water at the MSUBI Site require health and safety precautions to protect workers from known and potentially unknown environmental contaminants. A Type I plan is required for projects that involve excavations to depths greater than 2 feet below the ground surface. A Type II plan is required for projects that involve earthwork in shallow soil less than 2 feet below the ground surface. Complete a job-specific Site Health and Safety Plan (Type I or Type II) and obtain approval signatures from the Project Manager, Project Safety Officer, Safety Department and Environmental Department.

PROJECT INITIATION CHECKLIST

Complete the Project Initiation Checklist. Projects that will involve penetrations (i.e., piles, boreholes, excavations, etc.) to depths of greater than 30 feet below the ground surface (approximate elevation of 560 feet NAVD 29) may need to take special precautions to avoid the creation of permanent migration conduits in an aquitard that lies between a shallow impacted aquifer and a deeper unimpacted aquifer beneath the site. The need for, and nature of, such precautions must be developed on a project-specific basis.

PERMIT APPROVAL

Obtain approval signatures from the Safety Department, Project Manager, and MSUBI Environmental Control Department.

WASTE CHARACTERIZATION

MSUBI will characterize, including sampling and analysis activities, and obtain disposal approval for residual soil/solid debris or water. To the extent possible, soil should be pre-characterized and landfill disposal approval obtained prior to beginning excavation so as to minimize disruption of the excavation project. MSUBI will use knowledge of the source of impact, existing data, and additional data (as necessary) to characterize impacted soil and water at the MSUBI as required for disposal approval and compliance with state and federal solid waste laws. MSUBI Environmental Control will complete and sign the waste profile for the selected disposal facility (e.g. landfill), address any review comments and secure disposal approval.

RESIDUAL MANAGEMENT

Sedimentation/Erosion Control Permit: Soil relocation should be completed in accordance with Part 91 (Soil Erosion and Sedimentation Control), and all other applicable regulatory frameworks, including the requirements of Parts 31 (Floodplains), 301 (Inland Lakes and Streams) and 303 (Wetlands) of Act 451. If necessary, permits should be obtained from MDEQ, the U.S. Army Corps of Engineers, and/or Ottawa County for planned cut/fill activities.

Vehicle Track-Out: Measures should be taken to minimize the potential for vehicle track-out of impacted soil from the MSUBI.

Continued on next page

Dust Control: The dust level at the site should be controlled during excavation/construction activities. Dust control techniques should be implemented, if necessary, during excavation and for as long as disrupted soil is present. These techniques may include the use of light water spray during dry periods to maintain the surface in a moist condition, use of dust palliatives, and limiting fall distance when moving impacted soils.

Soil Excavation and Stockpiling: Excavation and stockpiling precautions apply whenever an excavation will extend to depths greater than 2 feet below ground surface on the MSUBI Site. Shallow, unimpacted soils should be segregated from deeper, potentially impacted soil. Shallow, unimpacted soil can be placed directly on the ground or hard surface (e.g., asphalt or concrete) but should be managed in a manner that prevents erosion due to wind or precipitation. Deeper, potentially impacted soils should be stockpiled separately and placed on and covered with plastic sheeting to prevent contact with precipitation, erosion and possible contaminant migration. The use of additional erosion control measures may be required. Soils destined for off-site disposal may be temporarily stockpiled on-site prior to transportation off-site (while characterization and landfill disposal approval are obtained) or placed directly into transportation containers (e.g., rolloff boxes). Rolloff boxes should be covered with a tarp and stockpiles covered with plastic sheeting.

Soil Management and Disposal Options

Soil generated from depths shallower than 2 feet below ground surface may be freely relocated on the MSUBI Site unless they exhibit staining or odors. Soils generated from depths greater than 2 feet below the ground surface may not be freely relocated. These soils must be: (1) returned to the excavation; or (2) disposed off-site.

Returning Soil to Excavation: Following completion of the subsurface work activities, the potentially impacted deeper soil may be returned to the excavation and covered with shallow, unimpacted soil or clean fill, to prevent relocation of the deeper soil to the ground surface. The potentially impacted soil must be returned to the excavation only up to a depth of 2 feet below ground surface, and the unimpacted soil/clean fill returned to the upper 0 to 2 foot interval to restore the existing 2 foot cover of unimpacted surface soil that currently exists across the site. Soil that will be returned to the excavation does not require characterization.

Off-Site Disposal: Soils generated from depths greater than 2 feet below ground surface may be disposed off-site if it cannot be used as backfill. This soil must go to a controlled site (i.e. landfill) and must be properly characterized prior to off-site disposal to assure that it is managed in accordance with applicable state and federal regulations.

Water Management and Disposal Options

Ground water from the MSUBI Site cannot be discharged onto the ground surface or to surface water, but it can be returned to the excavation from which it was removed or managed off-site. Excavation and subsurface construction activities should be performed in a manner that reduces the volume of ground water collected and requiring management. Examples include minimizing the time that the excavation remains open and avoiding excavation during or prior to heavy rain events. Accumulated water can be removed from the excavation by pumping it into a temporary water storage tank (e.g., 1,000-gallon portable poly tank or larger "frac" tank). Water can be temporarily stored in this manner until completion of the subsurface construction activity or to allow for characterization of the water. Accumulated water from the excavation area must be: (1) discharged back into the excavation at the completion of the subsurface construction and before the excavation is filled with soil; or (2) disposed off-site. Water disposed off-site must be properly characterized prior to off-site disposal to assure that it is managed in accordance with applicable state and federal regulations.

DOCUMENTATION

All documentation pertaining to the management and disposal of soil and ground water residuals from the MSUBI Site should be maintained by the MSUBI Environmental Control Department. This documentation should include identification of the work area, supporting characterization data/information, and relevant landfill waste profile/disposal approval or treatment/discharge approval, and quantity of soil/water disposed (landfill weigh tickets, water discharge volumes, etc.).

MICHIGAN STATE UNIVERSITY

BELOW GRADE PERMIT

Rev. 2/18/14

A Below-Grade Permit must be obtained before doing any work that will expose or disturb soil or ground water at the MSUBI Site. This Permit assists in documenting that below-grade activities at the facility are carried out in a manner that: (1) is protective of human health and the environment; (2) assures that residuals generated during the work, if any, are managed and disposed in accordance with applicable law and regulation; (3) prevents exacerbation of existing contamination; and (4) complies with all other applicable occupational health, safety and environmental regulations. A Site Safety and Health Plan (Type I or II) is also required.

Project Description (Project Manager)

Location _____

Anticipated Depth _____

Purpose _____

_____

Health & Safety Requirements (Project Manager)

❑ Health & Safety Plan Completed.

Name of Project Manager _____

Signed _____ Date _____
(Project Manager)

Name of Safety Officer _____

Signed _____ Date _____
(Project Safety Officer)

Health & Safety Plan Approvals:

Signed _____ Date _____
(Safety Department)

Signed _____ Date _____
(Environmental Department)

Project Initiation Checklist (Project Manager)

- ❑ H&S Plan reviewed with project personnel.
- ❑ Identify/clear underground utilities within project area.
- ❑ Run-off/sediment controls are in place or available.
- ❑ Project Manager will inspect the area at the beginning of each work day, throughout the work day, and after any significant rainfall.

Does project involve ground penetrations greater than 30 feet below the ground surface?

O YES

O NO

If yes, description of precautions to prevent vertical impact migration:

_____

_____

_____

_____

Signed _____ Date _____
(Project Manager)

PERMIT APPROVAL

1. Understand and approve the below grade work.
2. Reviewed and approved this Below-Grade Permit and the Site Health & Safety Plan.

Signed _____ Date _____
(Safety Department)

3. Agree to the manner in which soils will be stockpiled and that they will remain covered at all times
4. Agree to the manner in which soil and/or groundwater residuals will be managed and disposed.

Signed _____ Date _____
(Project Manager)

Signed _____ Date _____
(MSUBI Environmental Control)

Continued on next page

Waste Characterization – Soil or other Solid Debris (Environmental Control)

- ❑ Analytical results available for soils/debris anticipated to be generated during course of the project?

  - O No: Project Manager to make arrangements for required analytical testing. Following residual management provisions outlined below.

  - O YES - Classification of Soils/Debris:
    - O Non-Hazardous
      Can soils be returned to the project site per EHS Procedure EHS 300?
      - O YES :
      - O NO: Continue
    - O Hazardous:
      Characteristically Hazardous
      - ❑ Ignitable
      - ❑ Corrosive
      - ❑ Toxic
      - ❑ Reactive

Listed Constituents

Constituents:_____

Concentrations exceed LDR?

O YES

O NO

TSCA Regulated Waste?

O YES

O NO

Disposal Arrangements:

Waste Characterization – Water (Environmental Control)

- ❑ Analytical results available for water anticipated to be generated during course of the project? (Note: Efforts should be made to avoid the entrainment of large amounts of solids in dewatering fluids to minimize the complexity of characterization/disposal.)

  - O No: Project Manager to make arrangements for required analytical testing. Follow residual management provisions outlined below.

Waste Characterization – Water (cont'd) (Environmental Control)

- O YES - Classification of Water:
  - O Non-Hazardous
  - O Hazardous:

    Characteristically Hazardous
    - ❑ Ignitable
    - ❑ Corrosive
    - ❑ Toxic
    - ❑ Reactive

Listed Constituents

Constituents:_____

TSCA Regulated Waste?

O YES

O NO

Disposal Arrangements:

Residual Management (Environmental Control)

Description of Soil Stockpiling Provisions:

Description of Water Management Provisions:

- ❑ Run-off/sediment controls required. (An erosion and sedimentation control permit needs to be obtained from the county if the project is w/in 500 feet of the waterline or will involve disruption of > 1 acre)
- ❑ Provisions for fugitive dust controls made, if necessary (vehicle track in/track out, dust palliatives, etc.)

TYPE I - SITE HEALTH & SAFETY PLAN
FOR BELOW GRADE PROJECTS DEEPER THAN TWO (2) FEET
MICHIGAN STATE UNIVERSITY BIOECONOMY INSTITUTE (MSUBI)

A. INTRODUCTION

Due to historical activities on the MSUBI Site and the pharmaceutical manufacturing plant historically located on the eastern adjoining property, soil and groundwater at the MSUBI Site (and the ingress/egress easement property) located deeper than two feet below the ground surface (bgs) may be impacted with hazardous substances at concentrations above nonresidential criteria developed by the Michigan Department of Environmental Quality (MDEQ). A Type I Site Health and Safety Plan must be prepared before doing any work that will expose or disturb soil or ground water deeper than two feet bgs at the MSUBI Site (and the ingress/egress easement property). This document describes the health and safety guidelines and procedures developed for the field activities described below that are deeper than two feet bgs, at the MSUBI Site (and the ingress/egress easement property) located in Holland, Michigan. Contractors engaged in excavation/construction activities are responsible for worker health and safety and should develop their own job-specific plans using the information contained in this document.

The guidelines and procedures contained herein are based on the best available information at the time of this plan's preparations. Specific requirements will be revised when and if new information is received or conditions change significantly from original indications. Written amendments will document all changes made to this plan and all such amendments will be included in Attachment B.

Where appropriate, specific Occupational Safety and Health Administration (OSHA) standards or other recognized authoritative guidance will be cited and applied. All work will be coordinated through the MSUBI Project Manager and will be performed in accordance with the provisions, guidelines, and procedures of this Site Health & Safety Plan (SH&SP), the requirements of OSHA's Hazardous Waste Operations and Emergency Response (HAZWOPER) standard (29 CFR 1910.120), and MSUBI's Safety Plan Program.

The excavation or trenching of soils to a depth of four feet or deeper requires compliance with the MIOSHA Construction Safety Standard – Excavation, Trenching and Shoring. The Daily Excavation Checklist found in this Type I Site Safety and Health Plan must be used to help assure a safe excavation. See Attachment A for the Daily Excavation Checklist.

Failure to comply with these requirements may result in dismissal from the site.

TYPE I HEALTH AND SAFETY PLAN

B. MANAGEMENT & ORGANIZATION

Project Manager: _____ **Company:** _____

Project Manager Designee: _____

The **Project Manager** is the individual with overall authority for project management including safety and environmental responsibilities. The Project Manager will be certified both as a HazWoper site worker (40 hour course) and as a supervisor/manager (8 hour course).

Project Safety Officer: _____ **Company:** _____

Project Safety Officer Designee: _____

The **Project Safety Officer** is the individual with the responsibility for assuring worker health and safety, and compliance with all elements of the Health & Safety Plan. This individual will be certified both as a HazWoper site worker (40 hour course) and as a supervisor/manager (8 hour course). The Project Safety Officer may also serve as the Excavation Qualified Person.

Excavation Qualified Person: _____

Company: _____

The **Excavation Qualified Person** is the individual responsible for assuring that all excavations (four feet or deeper) are properly constructed, inspected and maintained on a daily basis.

Complete the Organization Chart

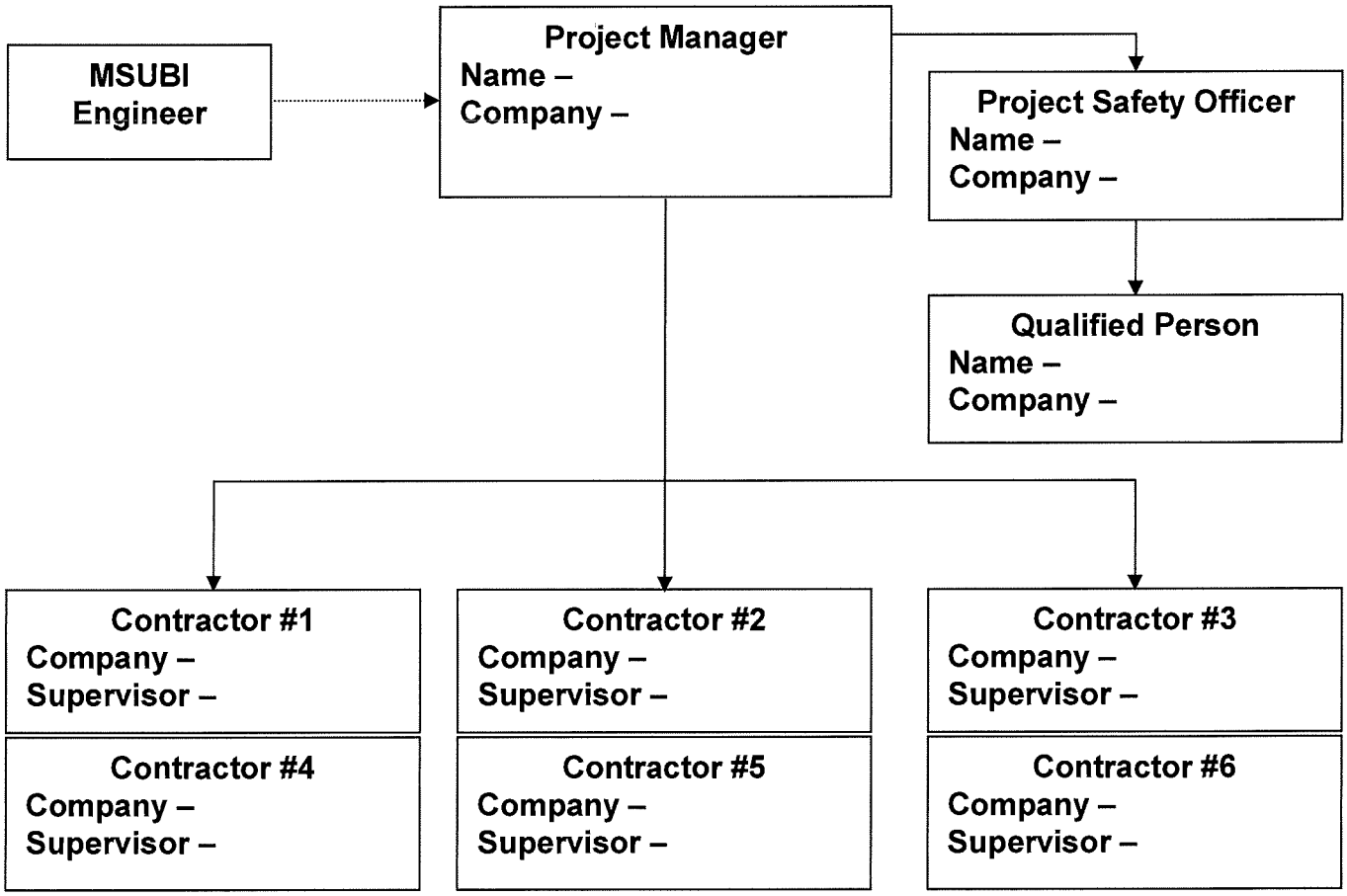

Plan Prepared By: _____ **Date:** _____

TYPE I HEALTH AND SAFETY PLAN

C. PLANNED WORK ACTIVITIES (Attached a drawing of the work area or provide in Figure 1.)

Description of Scheduled Project Work Tasks (Complete or Attach Specifications)

1. _____

2. _____

3. _____

4. _____

5. _____

6. _____

D. POTENTIAL WEATHER HAZARDS

Anticipated Dates of Scheduled Work Activities: _____

Is Rain Expected over Dates of Planned Activity: _____

Precautions to be Taken to Prevent Flooding and Potential Runoff:

_____
_____
_____
_____
_____
_____

Emergency Response Actions to be Taken in Event of Flooding and Potential Runoff:

_____
_____
_____
_____
_____
_____

Expected Temperatures over Dates of Planned Activity: _____

Expected Humidity over Dates of Planned Activity: _____

Where is the Nearest Approved Tornado Shelter Area: _____

If necessary, describe precautions to be taken to prevent heat related illness:

_____
_____
_____

If necessary, describe precautions to be taken to prevent cold related injuries:

_____
_____
_____

Describe any other precautions to be taken to prevent adverse weather related conditions:

_____
_____
_____

TYPE I HEALTH AND SAFETY PLAN

E. SITE HISTORY AND DESCRIPTION:

Historical activities on the MSUBI Site and the pharmaceutical manufacturing plant historically located on the eastern adjoining property may have impacted soil and groundwater at the MSUBI Site (and ingress/egress easement property) deeper than two feet bgs with hazardous substances at concentrations above nonresidential criteria developed by the MDEQ. In summary, metals, polynuclear aromatic hydrocarbons, volatile organic compounds (VOCs), one pesticide and polychlorinated biphenyls (PCBs) have been detected in soil at the MSUBI Site (and ingress/egress easement property). Metals and VOCs have also been detected in ground water at the MSUBI Site. Although none of these chemicals have been detected at concentrations above criteria relevant to subsurface construction workers, the following site Health & Safety Plan addresses personnel protection issues related to the involvement of all personnel in an excavation project that is expected to encounter known and potentially unknown contaminants at the MSUBI Site (and ingress/egress easement property). The level of protection, on-site monitoring, and emergency precautions included in this plan are limited to the scope of work in the activities necessary to the project.

F. SITE/MATERIAL CHARACTERISTICS

Material Types: Liquid Solid Sludge Gas or Vapor

Characterization(s): Volatile Toxic Unknown

List chemicals suspected to be present and possible concentrations (Environmental Control can provide additional tables and maps of contaminants detected in soil and groundwater at the MSUBI):

PERMISSIBLE EXPOSURE GUIDELINES					
Chemical	**8 Hr TWA-PEL**	**STEL**	**Skin**	**Soil/Water Concentration[1]**	**MSDS Attached**
Benzene	1 ppm	5 ppm	Yes	0.39 ppm	
PCB (Aroclor 1248)	No Data	No Data	Yes	2.1 ppm	
Chlorobenzene	75 ppm	No Data	Yes	24 ppm	
Ethylbenzene	100 ppm	125 ppm	Yes	0.065 ppm	
Methylene chloride	25 ppm	125 ppm	Yes	0.42 ppm	
Xylenes	100 ppm	150 ppm	Yes	2.5 ppm	

For other hazardous chemicals that may be present, provide the Material Safety Data Sheet or complete the Table below.

CHEMICAL NAME:		
	Acute Exposure Symptoms	First Aid
Inhalation		
Skin Contact		
Eye Contact		
Ingestion		

CHEMICAL NAME:		
	Acute Exposure Symptoms	First Aid
Inhalation		
Skin Contact		
Eye Contact		
Ingestion		

[1] Values are the highest detected concentrations in soil or groundwater at the MSUBI Site and ingress/egress easement property.

TYPE I HEALTH AND SAFETY PLAN

CHEMICAL NAME:		
	Acute Exposure Symptoms	First Aid
Inhalation		
Skin Contact		
Eye Contact		
Ingestion		

CHEMICAL NAME:		
	Acute Exposure Symptoms	First Aid
Inhalation		
Skin Contact		
Eye Contact		
Ingestion		

CHEMICAL NAME:		
	Acute Exposure Symptoms	First Aid
Inhalation		
Skin Contact		
Eye Contact		
Ingestion		

CHEMICAL NAME:		
	Acute Exposure Symptoms	First Aid
Inhalation		
Skin Contact		
Eye Contact		
Ingestion		

List all chemicals classified as suspected or known carcinogens:

1. Benzene
2. Methylene chloride
3. _____
4. _____
5. _____

G. CONTAMINANT EXPOSURE CONTROL

Direct skin exposure to contaminated soil or ground water must be avoided. The Project Manager is responsible for assuring work site security, air monitoring, and defined zones of contamination related to repair activities. Employees and contractors should immediately contact the Project Manager if stained soils or other unexpected conditions are encountered during the work. The MSUBI Safety Department should be contacted if unusual hazards are encountered or if questions arise as to the required level of safety to be provided.

H. PERIMETER ESTABLISHMENT:

Attach a drawing of the work area or provide a sketch of the work area in Figure 1.

Describe how the work area will be isolated from normal vehicle and pedestrian traffic.

_____

_____

_____

I. MONITORING EQUIPMENT AND PROCEDURES:

Chemical exposures through the air should be monitored through direct reading instruments including:

Instrument	Location of Monitoring Breathing Zone/Ambient Air	Frequency
Photo Ionization Meter, or Eagle Monitor – Organic Vapor - PPM Scale or Draeger Gas Monitor	Breathing zone of workers	Continuous
Multiple gas meter	If worker enters excavation, then monitor worker's breathing zone for oxygen, hydrogen sulfide, and lower explosive limit.	Continuous and alarm mode

Air monitoring should be conducted in all excavation and subsurface construction work areas unless these areas have been previously characterized as posing minimal inhalation risk. Additional air monitoring may be required if the excavation and subsurface construction work creates a confined space. Confined space entry procedures must be followed if workers enter any trench greater than 4 feet deep where a hazardous atmosphere exists or could reasonably be expected to exist. Monitoring devices should be calibrated at a frequency consistent with their manufacturers' recommendations.

For volatile compound exposures, if breathing zone PID readings of 10 ppm or higher persist above background for a sustained period of 30-60 seconds or workers experience any general exposure symptoms (e.g., headache, dizziness, tingling, itchy/watery eyes), then engineering controls should be implemented in the work zone (e.g., active ventilation) to reduce breathing zone air concentrations so they are consistently less than 10 ppm above background levels.

For the combustible gas meter, if readings indicate greater than 10% of the lower explosive limit (LEL), suspend operations and leave the area taking care not to generate flames or static sparking. Actively ventilate the area and resume work only when readings are consistently less than 10% of the LEL.

For the oxygen meter, if readings indicate less than 19.5% oxygen, suspend operations and leave the area. If readings indicate greater than 23% oxygen, suspend operations (due to increased fire hazards), turn off or remove any equipment that may present a source of ignition, and leave the area. For both scenarios, actively ventilate the area and resume work when oxygen readings are consistently between 19.5% and 23%.

J. LEVEL OF PERSONAL PROTECTIVE EQUIPMENT REQUIRED:

PERSONAL PROTECTIVE EQUIPMENT (PPE) SPECIFICATIONS:

Level D _____ If no odors or staining encountered, Benzene concentrations are below 1 part per million (PPM) and organic vapor readings are consistently measured below 10 PPM.

All personnel wear modified Level D protective equipment (i.e., coveralls (or long-sleeved shirt and pants); safety glasses, hard hats, steel-toed boots, and neoprene gloves).

Level C _____ Upgrade to Level C respiratory protection if Benzene concentrations are at or above 1 PPM or if organic vapor readings are at or above 10 PPM as measured in the worker's breathing zone. Upgrade to Level C protective clothing if stained soil is encountered.

Level C also includes Tyvek coveralls, boot covers, and air purifying respirators with organic vapor cartridge.

Level B _____ Upgrade to Level B protection if Benzene concentrations are at or above 5 PPM or if organic vapor readings are at or above 100 PPM as measured in the worker's breathing zone.

Level B also includes an air supplied respirator.

Level A _____ Haz-Mat team members responding to an emergency involving highly toxic or skin absorbent chemicals can, if necessary, upgrade to Level A protection.

Level A includes self-contained breathing apparatus or an air supplied respirator with a five minute escape bottle and a full chemically resistant air suit.

K. ADDITIONAL EMERGENCY EQUIPMENT:

On Figure 1, identify the nearest location of the following emergency equipment:

- First Aid Kit
- Nearest Emergency Use Safety Showers
- Nearest Emergency Use Eye Wash Stations
- Type ABC Fire Extinguishers

Describe any special emergency equipment requirements for this project:

_____

_____

_____

TYPE I HEALTH AND SAFETY PLAN

L. DECONTAMINATION PROCEDURES:

Discard all disposable personal protective equipment (PPE) on-site at the end of each work day or more frequently as needed as indicated by a MSUBI Representative.

Wash hands, arms and face after removing PPE and shower as soon as practical after leaving the excavation site. Launder work clothes after each work day.

Describe any special decontamination solutions and personnel/equipment procedures if required by specific chemical hazards.

Personnel Decontamination Procedure _____

_____

_____

_____

_____

Equipment Decontamination Procedure _____

_____

_____

_____

_____

M. MEDICAL SURVEILLANCE

All team members must participate in a Medical Surveillance program. The content of this program must satisfy MIOSHA Hazardous Waste Operations and Emergency Response standard rules R325.52113 to R325.52113 under the supervision of a licensed physician.

The Project Manager shall confirm that all team members participate in a medical surveillance program.

The MSUBI emergency reporting system shall be used if a team member becomes ill or injured.

N. EMERGENCY INFORMATION

LOCAL RESOURCES (TELEPHONE NUMBERS):

Ambulance:	911
Holland Hospital Emergency Room:	394-3202
Poison Control Center:	1-800-632-2727 (Blodget)
Police (State/County/Local):	911
Fire Department:	911

ON-SCENE RESOURCES:

Radio: MSUBI Colleagues and all Contractor Supervisors carry radios.

O. Emergency Routes

Hospital: Holland Community Hospital
602 Michigan Avenue
Holland, Michigan
(616) 394-3202

Drive east to River Avenue, turn right (south), proceed about one mile south on either Pine (River becomes Pine) or River (River becomes Michigan Ave.) until arriving at the Hospital on Michigan Ave.

TYPE I HEALTH AND SAFETY PLAN

P. PROJECT TEAM MEMBERS:

Workers involved in excavation and subsurface activities at the MSUBI Site (and ingress/egress easement property) should have completed 24 or 40 hours of Hazardous Waste Operations and Emergency Response (HAZWOPER) training pursuant to 29 CFR 1910.120 and be current on their annual eight hour HAZWOPER refresher training.

LIST ALL MEMBERS AND THEIR EMPLOYERS, RESPONSIBILITIES, AND DATES OF LAST HAZWOPER TRAINING AND MEDICAL EXAM.

NAME OF TEAM MEMBER	CONTRACTOR COMPANY OR EMPLOYER	TEAM MEMBER'S RESPONSIBILITY	HAZWOPER CERTIFIED CONFIRMED (Y/N)	YEAR OF LAST MEDICAL EXAM

Q. SIGNATURES (Attach Additional Sheets as Necessary)

I, _____, (Project Manager) have discussed this Safety Plan with the employee assigned to the project.

I, _____, (Project Safety Officer) have read and discussed this plan with the above company official. I understand all aspects of the plan and agree to follow all instructions detailed above.

I, _____, (Employee) have read and discussed this plan with the above company official. I understand all aspects of the plan and agree to follow all instructions detailed above.

I, _____, (Employee) have read and discussed this plan with the above company official. I understand all aspects of the plan and agree to follow all instructions detailed above.

I, _____, (Employee) have read and discussed this plan with the above company official. I understand all aspects of the plan and agree to follow all instructions detailed above.

I, _____, (Employee) have read and discussed this plan with the above company official. I understand all aspects of the plan and agree to follow all instructions detailed above.

I, _____, (Employee) have read and discussed this plan with the above company official. I understand all aspects of the plan and agree to follow all instructions detailed above.

I, _____, (Employee) have read and discussed this plan with the above company official. I understand all aspects of the plan and agree to follow all instructions detailed above.

TYPE I HEALTH AND SAFETY PLAN

FIGURE 1

Work Area Map/Sketch

Attachment A – Daily Excavation Checklist (Circle Answer)
(Use if Excavation or Trench is > 4 Feet Deep & Personal Entry is Required)

Utility Involvement

- ❑ Has the location of all utility lines (gas, energy, water, fire, etc.) been identified prior to excavation or trenching? **Yes – No – N/A**

Competent Persons

- ❑ Does a competent person inspect the trench at the beginning of each day and throughout the day as needed? **Yes – No – N/A**
- ❑ Is the trench inspected by a competent person following any amount of rain? **Yes – No – N/A**

Entrance/Exit Precautions

- ❑ Has a safe means of egress (stairway, ladder, ramp) been provided and is it within 25 feet of all persons working in the excavation?
  Yes – No – N/A

Colleague/Personal Protection/Trench Integrity

- ❑ Are walkways provided when employees or equipment are required to cross over excavations? **Yes – No – N/A**
- ❑ Are walkways that are six feet or more above lower levels of excavations equipped with guardrails? **Yes – No – N/A**
- ❑ Are colleagues provided with and required to wear proper safety equipment? **Yes – No – N/A**
- ❑ Have any hazardous objects been removed from the excavation area or blocked securely.
  Yes – No – N/A
- ❑ Is heavy equipment mounted so as to distribute weight evenly? **Yes – No – N/A**
- ❑ Have damaged materials or equipment been removed from service? **Yes – No – N/A**
- ❑ Has the soil type been classified? **Yes – No – N/A**
- ❑ Has the location of the excavation or trench been marked by banners, barricades, or other signals?
  Yes – No – N/A

Hazardous Atmospheres

- ❑ Is the air quality in the trench tested if a hazardous chemical is suspected to be present?
  Yes – No – N/A
- ❑ Is ventilation or respiratory protection required due to the presence of a hazardous atmosphere?
  Yes – No – N/A

Sloping/Shoring

- ❑ Has a trench or sewer box been used to prevent soil collapse into the excavation or trench; or
  Yes – No – N/A
- ❑ Has at least a 34 degree angle of repose been used to prevent soil collapse into the excavation or trench.
  Yes – No – N/A
- ❑ Is excavated material be maintained at least 5 feet from the edge of the excavation?
  Yes – No – N/A
- ❑ Are colleagues protected from loose material that could fall into the trench? **Yes – No – N/A**

Water Accumulation

- ❑ Is the trench free of standing water or are adequate precautions in place to prevent water accumulation? **Yes – No – N/A**
- ❑ Is water removal equipment operating under the guidance of the competent person?
  Yes – No – N/A
- ❑ Are diversion ditches or dikes in place to prevent surface water from entering the excavation or trench?
  Yes – No – N/A

Emergency Response/First Aid

- ❑ Has a Type I or Type II Site Safety and Health Plan been implemented? **Yes – No – N/A**
- ❑ Is emergency rescue equipment readily available, in working order, and attended when in use?
  Yes – No – N/A

DESCRIPTION OF NECESSARY REPAIRS OR CORRECTIONS

Name of Competent Person Performing Inspection _____ Date _____

Repairs/Corrections Must be Completed by (Date) _____ Page _____ of ____

ATTACHMENT B

SITE SAFETY PLAN AMENDMENTS

Site Safety Plan Amendment #: _____
Site Name: _____
Date: _____
Type of Amendment: _____

Reason for Amendment: _____

_____
_____
_____
_____
_____

Alternate Safeguard Procedures: _____

_____
_____
_____
_____
_____

Required Change In PPE: _____

_____
_____
_____
_____
_____

Project Manager or Safety Officer	Date

TYPE II - SITE HEALTH & SAFETY PLAN
FOR BELOW GRADE PROJECT SHALLOWER THAN TWO (2) FEET
MICHIGAN STATE UNIVERSITY BIOECONOMY INSTITUTE (MSUBI)

A. INTRODUCTION

This document describes the health and safety guidelines and procedures developed for the field activities described below that are conducted in shallow soil from the ground surface to a depth of no more than two (2) feet, for MSUBI (and the ingress/egress easement property) located in Holland, Michigan. This Type II Site Safety and Health Plan is not appropriate for any work conducted deeper than two (2) feet below the ground surface (bgs). Furthermore, this Plan must be immediately terminated if any work allowed by this plan causes or creates the potential for exposure to hazardous wastes. Exposure shall be presumed if any of the following circumstances are encountered:

1. Solvent Odors;
2. Broken Bottles or Glass;
3. Discolored or Stained Soils; or
4. Animal Hides.

If any of these circumstances are encountered, then the Project Manager and Environmental Control must be notified immediately and work under this Plan shall cease until Environmental Control determines whether work can continue under this Plan or work must be conducted under a Type I Site Health and Safety Plan where appropriate specific Occupational Safety and Health Administration (OSHA) standards or other recognized authoritative guidance will be cited and applied. All work will be coordinated through the Project Manager and will be performed in accordance with the provisions, guidelines, and procedures of this Site Health & Safety Plan, and MSUBI's Safety and Health Program.

The excavation or trenching of soils to a depth of four feet or deeper must be conducted under a Type I Site Health and Safety Plan and requires compliance with the MIOSHA Construction Safety Standard – Excavation, Trenching and Shoring.

Failure to comply with these requirements may result in dismissal from the site.

B. MANAGEMENT & ORGANIZATION

Project Manager: _____ **Company:** _____

Project Manager Designee: _____

The **Project Manager** is the individual with overall authority for project management including safety and environmental responsibilities. The Project Manager does not have to be trained as a HazWoper site worker (40 hour course) or supervisor/manager (8 hour course).

Project Safety Officer: _____ **Company:** _____

Project Safety Officer Designee: _____

The **Project Safety Officer** is the individual with the responsibility for assuring worker health and safety, and compliance with all elements of the Health & Safety Plan. The Safety Officer does not have to be trained as a HazWoper site worker (40 hour course) or supervisor/manager (8 hour course). The Project Safety Officer is optional for Type II work.

Anticipated Dates of Scheduled Work Activities: _____

Plan Prepared By: _____ **Date:** _____

TYPE II HEALTH AND SAFETY PLAN

C. PLANNED WORK ACTIVITIES (Attached a drawing of the work area or provide in Figure 1.)

Description of Scheduled Project Work Tasks (Complete or Attach Specifications)

1. _____

2. _____

3. _____

4. _____

TYPE II HEALTH AND SAFETY PLAN

D. POTENTIAL WEATHER HAZARDS

Anticipated Dates of Scheduled Work Activities: _____

Is Rain Expected over Dates of Planned Activity: _____

Precautions to be Taken to Prevent Flooding and Potential Runoff:

_____
_____
_____
_____
_____
_____

Emergency Response Actions to be Taken in Event of Flooding and Potential Runoff:

_____
_____
_____
_____
_____
_____

Expected Temperatures over Dates of Planned Activity: _____

Expected Humidity over Dates of Planned Activity: _____

Where is the Nearest Approved Tornado Shelter Area: _____

If necessary, describe precautions to be taken to prevent heat related illness:

_____
_____
_____

If necessary, describe precautions to be taken to prevent cold related injuries:

_____
_____
_____

Describe any other precautions to be taken to prevent adverse weather related conditions:

_____
_____
_____

TYPE II HEALTH AND SAFETY PLAN

D. SITE HISTORY AND DESCRIPTION:

Historical activities on the MSUBI Site and the pharmaceutical manufacturing plant historically located on the eastern adjoining property may have impacted soil and groundwater at the MSUBI (and ingress/egress easement property) deeper than two feet bgs with hazardous substances. However, contaminants are not known nor expected to be present in shallow soil from the ground surface to a depth of two (2) feet at the MSUBI (and ingress/egress easement property) at concentrations above criteria relevant to workers. Nonetheless, this Plan must be immediately terminated MSUBI EHS personnel contacted if any of the following circumstances are encountered: solvent odors; broken bottles or glass; discolored or stained soils; or animal hides.

E. SITE/MATERIAL CHARACTERISTICS

Material Types: None Expected

Characterization(s): Not Applicable

Chemical Data: Not Applicable – Exposure to hazardous wastes is not allowed.

Emergency Procedures: Not Applicable – Exposure to hazardous wastes is not allowed.

F. CONTAMINANT EXPOSURE CONTROL

Direct skin exposure to contaminated soil and ground water must be avoided. Employees and contractors must immediately contact MSUBI's Project Engineer or Supervisor if odors, stained soils, or other unexpected conditions are encountered during the work.

G. PERIMETER ESTABLISHMENT:

Attach a drawing of the work area or provide a sketch of the work area in Figure 1.

Describe how the work area will be isolated from normal vehicle and pedestrian traffic.

_____

_____

_____

H. MONITORING EQUIPMENT AND PROCEDURES:

None Required.

I. LEVEL OF PERSONAL PROTECTIVE EQUIPMENT REQUIRED:

PERSONAL PROTECTIVE EQUIPMENT (PPE) SPECIFICATIONS:

Level D _____ If no odors or staining encountered, Benzene concentrations are below 1 part per million (PPM) and organic vapor readings are consistently measured below 10 PPM.

All personnel wear modified Level D protective equipment (i.e., coveralls (or long-sleeved shirt and pants); safety glasses, hard hats, steel-toed boots, and neoprene gloves).

J. ADDITIONAL EMERGENCY EQUIPMENT:

On Figure 1, identify the nearest location of the following emergency equipment:

- First Aid Kit
- Nearest Emergency Use Safety Showers
- Nearest Emergency Use Eye Wash Stations
- Type ABC Fire Extinguishers
- Nearest Emergency Telephone(s)

Describe any special emergency equipment requirements for this project:

_____

_____

_____

K. DECONTAMINATION PROCEDURES:

Not Applicable – Exposure to hazardous wastes is not allowed. Nonetheless, safe work practices suggest that workers should wash hands, arms and face or shower as soon as practical after leaving the excavation site and launder work clothes after each work day.

L. MEDICAL SURVEILLANCE

Not Applicable – Exposure to hazardous wastes is not allowed.

N. EMERGENCY INFORMATION

LOCAL RESOURCES (TELEPHONE NUMBERS):

Ambulance:	911
Holland Hospital Emergency Room:	394-3202
Poison Control Center:	1-800-632-2727 (Blodget)
Police (State/County/Local):	911
Fire Department:	911

ON-SCENE RESOURCES:

Radio: MSUBI Engineers and Supervisors carry radios.

O. Emergency Routes

Hospital: Holland Community Hospital
602 Michigan Avenue
Holland, Michigan
(616) 394-3202

TYPE II HEALTH AND SAFETY PLAN

P. SIGNATURES

I, _____, (Project Manager) have discussed this Safety Plan with the employee assigned to the project.

I, _____, (Employee) have read and discussed this plan with the above company official. I understand all aspects of the plan and agree to follow all instructions detailed above.

I, _____, (Employee) have read and discussed this plan with the above company official. I understand all aspects of the plan and agree to follow all instructions detailed above.

I, _____, (Employee) have read and discussed this plan with the above company official. I understand all aspects of the plan and agree to follow all instructions detailed above.

I,_____, (Employee) have read and discussed this plan with the above company official. I understand all aspects of the plan and agree to follow all instructions detailed above.

I, _____, (Employee) have read and discussed this plan with the above company official. I understand all aspects of the plan and agree to follow all instructions detailed above.

TYPE II HEALTH AND SAFETY PLAN

FIGURE 1

Work Area Map/Sketch

Appendix K

LNAPL Monitoring & Management Plan

LNAPL Monitoring and Management Plan

Warner-Lambert Company LLC Former Plant Site
188 Howard Avenue
Holland, Michigan

Prepared for

October 2013
Revision 1: April 2022

3033 Orchard Vista Drive SE, Suite 200
Grand Rapids, MI 49546
616.512.7000
www.barr.com

LNAPL Monitoring and Management Plan

April 2022

Contents

1 Introduction 1

1.1 Background 1

1.2 Objective 2

2 Observation Well Network 2

2.1 LNAPL Body Wells 2

2.2 Sentinel Observation Wells 2

3 LNAPL Management Approach 2

3.1 Monitoring Methods and Reporting 3

3.2 Evaluative Responses to Observed Hydrogeological and LNAPL Conditions 3

3.3 Contingent Responses to Significant LNAPL Migration Events 4

4 Plan Modification and Termination Conditions 4

List of Figures

Figure 1	Site Location Map
Figure 2	Site Map with Observation Well Locations
Figure 3	LNAPL Monitoring and Contingency Procedure Flow Chart

List of Attachments

Attachment 1	2017 LNAPL Evaluation and Recoverability Analysis
Attachment 2	Observation Well Inspection Record Form

1 Introduction

This LNAPL Monitoring and Management Plan (LMMP) describes LNAPL assessment activities to be performed at the Warner-Lambert Company LLC's former manufacturing plant in Holland Charter Township, Ottawa County, Michigan (Plant Site). A site location map is provided in Figure 1. Assessment of LNAPL conditions at the site have been actively performed since 2004 at the site.

1.1 Background

Evidence of light non-aqueous phase liquid (LNAPL) was identified in the south-central portion of the Plant Site during site investigation activities in 2002. Observation wells were installed between 2002 and 2004 in an effort to determine the absence/presence of LNAPL associated with a mass of volatile organic compounds (VOCs) detected in soils in the area. As part of the Final Remedial Action Plan (RAP)/Corrective Measures Implementation Plan (CMIP) which was approved by the Michigan Department of Environment, Great Lakes and Energy (EGLE) on June 20, 2014, the delineated area of VOCs in soil within which the LNAPL assessment area is located was designated as the "No Dig Area". The location of the No Dig Area and the approximate aerial extent of observed LNAPL within the Plant Site is shown on Figure 2. Amongst other corrective action activities, the RAP/CMIP included the construction and operation of the Hydraulic Containment System (HCS) which prevents migration of groundwater from the entire Plant Site to off-site properties and the adjoining Macatawa River through the maintenance of an inward gradient via ground water extraction within a perimeter sub-surface barrier wall containment system.

The original LMMP was prepared in October 2013 and included within the final RAP/CMIP. Activities completed over the years in the LMMP have included routine inspection of observation wells for the absence/presence of LNAPL, recovery of observed LNAPL where feasible and appropriate, reporting on LNAPL monitoring, the completion of an LNAPL Recoverability Analysis, and periodic interim modifications to adjust the routine monitoring and management activities based on observed conditions. Each interim modification to the LMMP was proposed to, and approved by, EGLE prior to implementation, however the LMMP document as a whole has not been revised since 2013.

Implementation of the LMMP since 2013, and prior assessment of the LNAPL conditions, has resulted in a sound understanding of the factors controlling the presence, recoverability, and migration potential of LNAPL. The prevailing hydrogeological conditions at the site establish a consistent "confined LNAPL" condition where LNAPL is contained within a fill unit overlying an upper sand aquifer through upward hydraulic pressure. A thorough description of this condition and the implications for LNAPL migration potential is provided in the Risk-Based LNAPL Evaluation and Recoverability Analysis, included for reference as Attachment 1. The recoverability analysis concluded that the NAPL present is residual and has been recovered to the maximum extent practicable under existing site conditions. Monitoring of LNAPL in observation wells while the confined LNAPL condition has persisted (continuously since at least 2014) has clearly demonstrated a lack of migration of LNAPL beyond the historically defined LNAPL body area.

1.2 Objective

The purpose of this LNAPL Monitoring and Management Plan (LMMP) is to provide a description of monitoring and management procedures to assess and, if warranted, respond to evidence of changes in the mobility/migration of LNAPL on the former Plant Site in Holland, Michigan.

2 Observation Well Network

The network of observation wells at the site utilized to monitor LNAPL conditions is comprised of "LNAPL Body" wells and sentinel observation wells. Details on each of these well types are described below.

2.1 LNAPL Body Wells

Observation wells present within the area of LNAPL occurrence include LBOW-1, LBOW-2, and PZ-53. These wells are referred to as LNAPL body wells and the location of the wells is shown in Figure 2. The well screens for LBOW-1 and LBOW-2 are positioned with the top of the screen just below the interface of the fill material and the underlying upper sand aquifer. The well screen for PZ-53 penetrates both the upper sand aquifer and overlying peat and organic clay soils. LNAPL accumulations within LNAPL body wells has nearly exclusively been limited to the LBOW-1 location.

2.2 Sentinel Observation Wells

A total of six observation wells are located along the perimeter of the historically defined area of VOC mass in soils (referred to within the RAP/CMIP as the designated "no dig area"). These observation wells are referred to as sentinel observation wells and include SOW-1 through SOW-5 and PZ-52. The location of the sentinel observation wells is shown in Figure 2. The locations of SOW-2 and SOW-3 are positioned between the historical LNAPL occurrence and pumping extraction well locations for the HCS at EW-1 and EW-3, respectively to allow early identification of LNAPL migration that may be occurring toward these components of the HCS. Observation well PZ-52, located in the vicinity of the original EW-2 location, was also maintained for the purpose of this assessment. When EW-2 was replaced with EW-2R due to well production problems unrelated to LNAPL conditions, SOW-5 was installed to evaluate potential LNAPL migration toward that HCS extraction well. No accumulations of LNAPL have been observed in sentinel observation wells with the exception of periodic observations of a sheen on the measurement device at the SOW-5 location. The defined margins of the LNAPL occurrence have not changed over the course of approximately 20 years of assessment activities.

3 LNAPL Management Approach

The LNAPL management approach employed at the site has been to assess and, if warranted, respond to LNAPL migration to ensure the long-term integrity of the HCS. Since initiation of the formal LMMP in 2013, the scope of assessment activities has evolved in response to the high degree of consistency in observations and the lack of LNAPL migration. Starting in 2020, the scope of assessment activities was modified to include only a single annual inspection event for sentinel observation wells and the primary focus of the LMMP was directed toward tracking groundwater elevations in the area to determine when/if

the prevailing confined LNAPL condition may transition to an unconfined condition. As described in the Risk-Based LNAPL Evaluation and Recovery Analysis included as Attachment 1, a groundwater elevation of 577 feet MSL represents the potential transition from confined to unconfined conditions based on the approximate elevation of the fill unit/upper sand aquifer contact. Details of the assessment and reporting process are provided in the following sections.

3.1 Monitoring Methods and Reporting

The sentinel observation wells will be inspected on an annual basis in the summer for the possible presence of LNAPL through the use of oil/water interface probes. The interface probe will be lowered into the observation wells and depth to groundwater, and depth to LNAPL surface if present, from the top-of-casing recorded. Upon retrieval, the interface probe will be visually inspected for evidence of LNAPL such as sheening or oil coated surfaces. The weather conditions, condition of the ground surface near the well, well integrity, and operational status of the HCS (i.e., which extraction wells are operating and associated extraction rates) will be noted on a log sheet developed for this purpose. An example log sheet to be initially utilized is provided in Attachment 2.

Groundwater elevations are measured monthly at perimeter piezometer locations to evaluate the operational performance of the HCS. Groundwater elevations at the perimeter piezometers closest to the LNAPL area (PZ-3 and PZ-4 locations) are evaluated to determine if levels are trending toward the 577 foot elevation where LNAPL conditions could transition from confined to unconfined. The results of this evaluation are provided to EGLE quarterly as part of the HCS performance monitoring reporting process. The results of the annual summer inspection of SOWs is also provided to EGLE in the HCS performance monitoring report that covers that time period.

3.2 Evaluative Responses to Observed Hydrogeological and LNAPL Conditions

If LNAPL is identified in SOWs at a thickness greater than 0.2 feet, inspection frequency will increase to monthly. Monthly inspection will continue if persistent LNAPL thickness is measured in a sentinel observation well. Persistent observation of LNAPL in a sentinel observation well is defined as LNAPL thickness greater than 0.2 feet for two consecutive monthly inspection events. If persistent LNAPL thickness is not identified through the monthly inspections, the inspection frequency will revert to annual. An LNAPL monitoring and contingency procedure flow chart outlining this approach is provided as Figure 3.

Groundwater elevations within the LNAPL area have ranged from approximately 578.5 to 582 feet MSL; a minimum of 1.5 feet higher than the 577 foot potential transition elevation. If groundwater elevations fall below 577 feet representing a potential for transition to unconfined LNAPL conditions, inspection of both sentinel observation wells and LNAPL body observation wells will be initiated on a monthly basis. If no indications of increased LNAPL mobility/migration and/or recoverability under unconfined conditions are observed after one year, monitoring of LNAPL body observation wells will be suspended and sentinel observation wells will continue to be monitored quarterly for an additional year. Periodic groundwater elevation fluctuations above and below the 577 foot elevation will not necessitate restarting or extending

the periods of observation well inspections. If no evidence of increased mobility/migration and/or recoverability under unconfined conditions are observed after one year of monthly and one year of quarterly inspection of sentinel observation wells, the LMMP will be terminated and all observation wells abandoned.

3.3 Contingent Responses to Significant LNAPL Migration Events

Response actions to address LNAPL migration events will be focused on such events that may occur under routine operational conditions of the HCS and associated typical hydraulic/hydrogeological conditions. Transient increases in observed LNAPL thickness in observations wells attributable to short term upsets in HCS operations or atypical recharge events are not likely to adversely affect the operational integrity of the containment system, will not involve significant contaminant mass, and can be adequately managed through re-establishment of routine operating conditions of the HCS. Significant and persistent LNAPL migration events under routine operational conditions of the HCS will be addressed through the implementation of contingent response actions. The contingent response actions may include increased frequency or duration of observation well inspections, modification of groundwater pumping patterns associated with HCS operations, construction of a physical barrier to prevent LNAPL migration, or the implementation of localized hydraulic control and/or capture systems to prevent LNAPL migration. Other response actions may also be considered as appropriate to the observed LNAPL migration condition. EGLE approval of any necessary contingent response measures, and associated modifications to the LMMP, will be solicited prior to implementation of the response measures.

4 Plan Modification and Termination Conditions

As described above, monitoring of groundwater elevations at nearby piezometers will be completed on a monthly basis and inspection of sentinel observation wells on an annual basis will continue while the groundwater elevations in the area remain above 577 MSL (reflective of confined LNAPL conditions). If after two additional years of this monitoring the groundwater elevations do not drop below 577 feet and no changes in LNAPL conditions are observed, the annual inspection of sentinel observation wells will be suspended. The potential for LNAPL conditions to transition from confined to unconfined will continue to be evaluated through the monthly groundwater elevation data collected as part of the HCS performance monitoring program.

As outlined in Section 3.2, if groundwater elevations fall below 577 feet representing a potential for transition to unconfined LNAPL conditions, inspection of both sentinel observation wells and LNAPL body observation wells will be initiated on a monthly basis. If no indications of increased LNAPL mobility/migration and/or recoverability under unconfined conditions are observed after one year, monitoring of LNAPL body observation wells will be suspended and sentinel observation wells will continue to be monitored quarterly for an additional year. Periodic groundwater elevation fluctuations above and below the 577 foot elevation will not necessitate restarting or extending the periods of observation well inspections. If no evidence of increased mobility/migration and/or recoverability under unconfined conditions are observed after one year of monthly and one year of quarterly inspection of sentinel observation wells, the LMMP will be terminated and all observation wells abandoned.

Figures

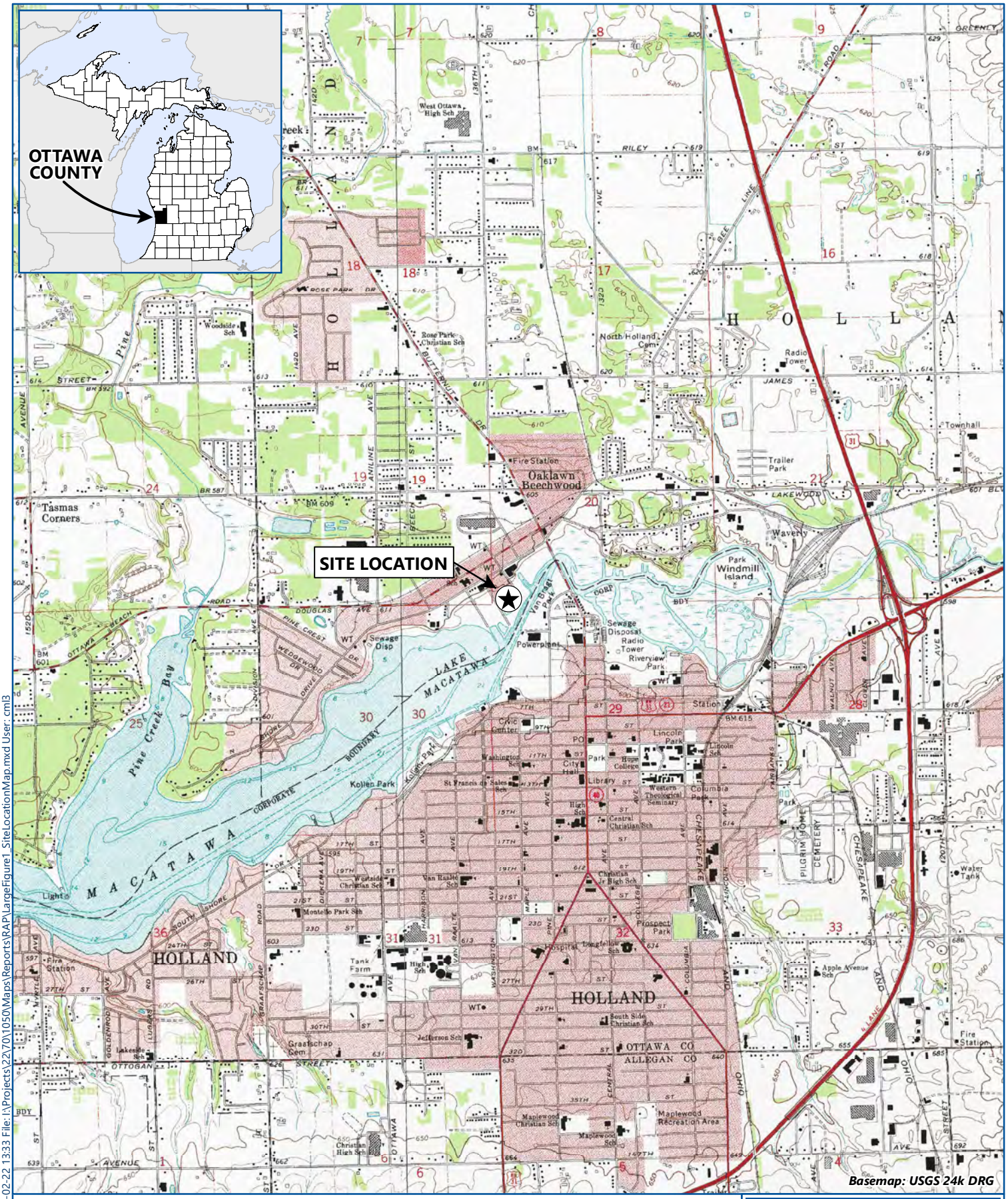

Site Location

0 3,000
Feet

BARR

SITE LOCATION MAP
WARNER-LAMBERT FORMER MANUFACTURING SITE
Holland, MI

LARGE FIGURE 1

Barr Footer: ArcGIS 10.8.1, 2022-02-22 13:33 File: I:\Projects\22\70\1050\Maps\Reports\RAP\LargeFigure1_SiteLocationMap.mxd User: cml3

Property Boundary
No Dig Area
Hydraulic Containment Wall
Geomembrane Cap
Extraction Well Transmission Line
Deep Well Transmission Line
Drainage Swale
100-Year Floodplain Limit
Fence
Deep Well
Abandoned Deep Well
Extraction Well
Piezometer
LNAPL "Body" Observation Well
Sentinel Observation Well
Observation Well
GWTS Building Expansion
PCB Remediation Waste Area
Apx. Extent of LNAPL Occurence Over Past 15 Years

Notes:
Locations are bosed off of CAD drawing PFZ01161F07R-DEC2014.dwg (Figure 2-1, March 2015). Information contained in the drawings was georeferenced and scaled based on common locations visible on the aerial photograph. Locations should be considered approximate.

N

0 200
Feet

SITE MAP WITH OBSERVATION WELL LOCATIONS
WARNER-LAMBERT FORMER MANUFACTURING SITE
Holland, MI

LARGE FIGURE 2

BARR

Barr Footer: ArcGIS 10.8.1, 2022-03-17 11:31 File: I:\Projects\22\70\105\Maps\Reports\Post Closure Plan\Appendix - LMMP 2022 Revision\Figure2_SiteMap with ObservationWells.mxd User: cml3

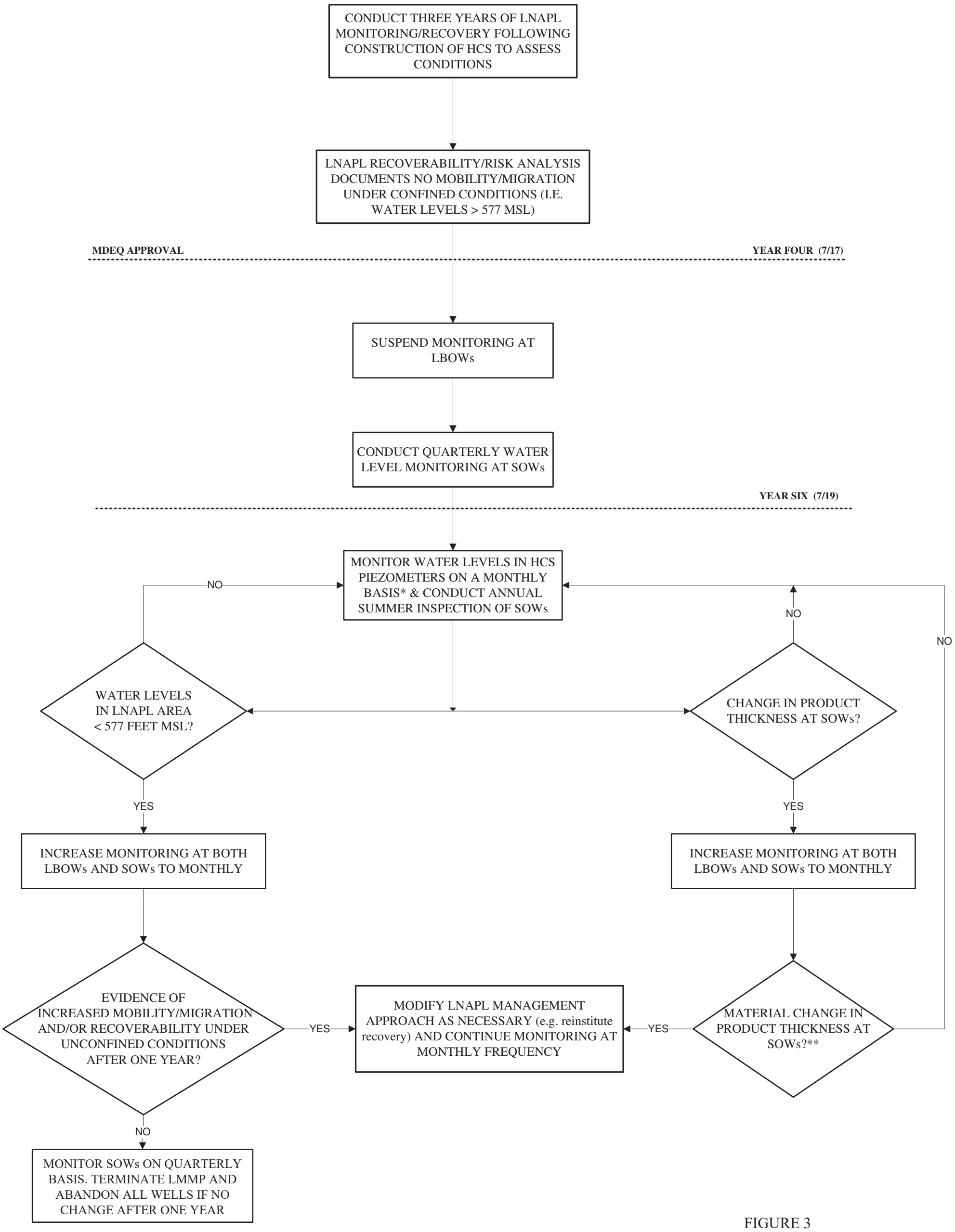

NOTES:

* WATER LEVELS TO BE MONITORED ON MONTHLY BASIS AT PZ-3 AND PZ-4 AND REPORTED TO EGLE IN QUARTERLY HYDRAULIC CONTAINMENT SYSTEM (HCS) PERFORMANCE MONITORING REPORTS

**MATERIAL CHANGE IN PRODUCT THICKNESS IS DEFINED AS PERSISTENT LNAPL THICKNESS >0.2 FOOT AT A SOW. PERSISTENT LNAPL THICKNESS IS DEFINED AS MEASURED LNAPL AT A SOW FOR TWO CONSECUTIVE MONTHLY INSPECTION EVENTS

FIGURE 3

LNAPL MONITORING AND CONTINGENCY PROCEDURE FLOW CHART

Warner Lambert
Holland, Michigan

BARR

4771 50th Street SE
Grand Rapids, MI 49512

Attachment 1

2017 LNAPL Evaluation and Recoverability Analysis

Pfizer Inc.
100 Route 206 North
Peapack, NJ 07977
(908) 901-7395

February 27, 2017

Mr. David Slayton
Office of Waste Management and Radiological Protection
Michigan Department of Environmental Quality
Constitution Hall, Lower Level
PO Box 30241
Lansing, Michigan 48909

RE: LNAPL Monitoring and Management Plan (LMMP)
Summary of Results for the 2nd Quarter (November 2016 - January 2017) of Year 3
Warner-Lambert Company Former Manufacturing Site
Holland, Michigan (MID 006 013 643)

Dear Mr. Slayton:

This letter report provides a summary of monitoring and LNAPL recovery activities completed during the 2nd quarter (November 2016 through January 2017) of Year 3 at the Warner-Lambert Company's former manufacturing facility in Holland, Michigan pursuant to the *LNAPL Monitoring and Management Plan* (LMMP) contained in Appendix N of the MDEQ-approved *Remedial Action Plan/Corrective Measures Implementation Plan*.

The first year of implementation of the LMMP (July 2014-July 2015) following approval of the Final RAP/CMIP in June 2014 represented an initial assessment period whereby the frequency of inspections and associated management activities were to be adjusted based on observed conditions. A report of the initial assessment period was issued to MDEQ on August 31, 2015. The report recommended certain changes to the program based on observations made in the initial assessment period, including a reduction in the monitoring/recovery frequency.

The second year of program implementation was summarized in a reported, dated August 24, 2016. This report contained additional recommendations for modification to the LMMP including a further reduction in observation well inspections (from monthly to quarterly). The report also proposed a process for petitioning the MDEQ to allow termination of LNAPL recovery efforts at the conclusion of Year 3. This process was discussed with the MDEQ during a conference call on September 8, 2016. The MDEQ approved these changes in a letter, dated November 9, 2016.

MONITORING NETWORK

The LMMP observation well network is comprised of three (3) LNAPL Body Observation Wells (LBOWs) and six (6) Sentinel Observation Wells (SOWs) located within and along the perimeter, respectively, of an area where the presence of LNAPL has historically been documented. The locations of the LBOWs and SOWs in the southwest portion of the former Plant Site are provided in Figure 1. The LBOWs are utilized to evaluate the general rate of accumulation and recoverability of

LNAPL and the SOWs are utilized to evaluate the potential for migration of LNAPL from the historically defined limits of LNAPL occurrence.

METHODS OF INSPECTION

During the second quarter of implementation of Year 3 of the LMMP, the LBOWs and the SOWs were inspected on a quarterly basis for the presence of LNAPL. The observation wells were inspected for the possible presence of LNAPL through the use of an oil/water interface probe. The interface probe was lowered into the observation wells and depth to groundwater, and depth to LNAPL surface if present, from the top-of-casing recorded. Upon retrieval, the interface probe was visually inspected for evidence of LNAPL such as sheening or oil coated surfaces. The weather conditions, condition of the ground surface near the well, well integrity, and operational status of the Hydraulic Containment System (i.e., which extraction wells are operating and associated extraction rates) were noted on a log sheet developed for this purpose. A copy of the completed log sheet is provided in Attachment 1.

SUMMARY OF HYDROGEOLOGICAL CONDITIONS

Groundwater elevations measured in the vicinity of the LNAPL area in the second quarter of Year 3 were at or above 579 feet MSL. The Hydraulic Containment System was consistently operated during the reporting period with minimal downtime. Extraction well operations were limited to EW-1 (2.5 gpm), and EW-2R (6.5 gpm) which are located west and north-northeast, respectively, of the LMMP observation well network (Figure 1) and EW-4 (4.75 gpm) which is located on the southeastern portion of the former manufacturing site approximately 400 feet from the observation well network. EW-3 and EW-5R were not operated during the reporting period. As expected, local groundwater flow within the LMMP study area is in a radial pattern in the direction of where groundwater extraction is occurring at EW-1 and EW-2R. A groundwater contour map illustrating the typical groundwater elevation distribution and flow direction for this period is provided as Figure 2.

RESULTS OF OBSERVATION WELL INSPECTIONS

The results of the inspection of the observation wells for the absence/presence of LNAPL are summarized in Table 1. Discussion of these observations is presented below for LBOWs and SOWs, respectively.

LNAPL Observations in LBOWs

The LBOWs (LBOW-1, LBOW-2, and PZ-53) were inspected on a quarterly basis for this period. The measured thickness are summarized on Table 1.

As noted on Table 1, 1.54 feet of LNAPL was measured at LBOW-1 during this quarter. No LNAPL accumulation was observed at LBOW-2 or PZ-53 during the quarter. A total of approximately 1 liter of LNAPL was recovered at LBOW-1 during this quarter. This 1 liter is the total LNAPL recovered to-date for year 3 of LMMP implementation since no LNAPL was recovered during the first quarter.

LNAPL Observations in SOWs

The SOWs (SOW-1 through SOW-5 and PZ-52) were inspected quarterly for this reporting period. No indications of LNAPL were observed at SOW-1, SOW-2, SOW-3, SOW-4 or PZ-52 during the inspection event. A trace of product ("small amount of marbled oil on probe") was observed at SOW-5. A summary of the observations is provided in Table 1 and a log sheet for the inspection event is provided in Attachment 1.

LNAPL Risk Evaluation and Recoverability Analysis

An LNAPL conceptual site model, summary of completed risk evaluations, and an assessment of LNAPL recoverability is provided as Attachment 2. This evaluation was completed in support of making recommendations for further modification to the LMMP at the conclusion of Year 3. The results of the risk evaluation and recoverability analysis clearly demonstrate that recovery of LNAPL has been completed to the maximum extent practicable for the prevailing confined LNAPL conditions and that cessation of LNAPL recovery will not result in an incremental exposure or migration risk.

Future Inspection Schedule

As described in the August 24, 2016 summary report on Year 2 LMMP operations, monitoring and, if warranted, recovery will continue at both the LBOWs and SOWs on a quarterly basis for the remainder of Year 3 (July 2017).

Based on the results of the LNAPL risk evaluation and recoverability analysis, we are proposing that monitoring and LNAPL recovery at the LBOWs be terminated at the end of Year 3. Quarterly monitoring of SOWs will continue into Year 4 of the LMMP implementation. Monitoring frequency at the SOWs would be increased to monthly (and monitoring at the LBOWs reinstituted at the same frequency) if: (1) the ground water elevations within the Hydraulic Containment System in the vicinity of the LNAPL area drop below an elevation of 577 feet MSL; and/or (2) there is evidence of material changes in the rate of product accumulation and/or migration observed at the SOWs.

If you have any questions or comments regarding this information, please contact me at (908) 901-7395.

Sincerely,

Thomas Donohue
Senior Manager

cc: Art Ostaszewski, MDEQ OWMRP
Allen Reilly, Barr Engineering

FIGURES

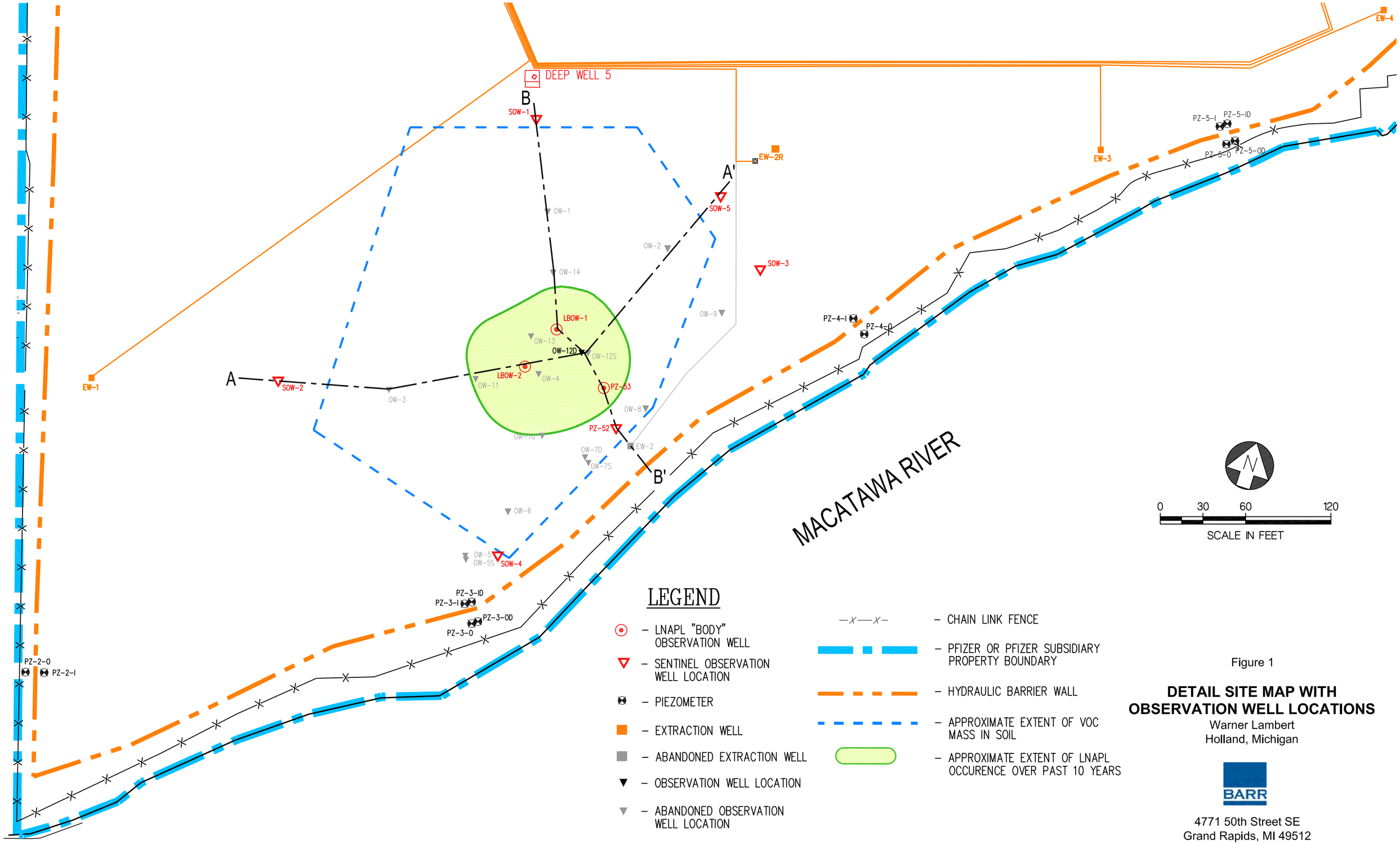

Figure 1

DETAIL SITE MAP WITH OBSERVATION WELL LOCATIONS

Warner Lambert
Holland, Michigan

BARR

4771 50th Street SE
Grand Rapids, MI 49512

CADD USER: Rick Gustner FILE: M:\DESIGN\22701022 WARNER LAMBERT\LNAPL ANNUAL REPORT - YEAR 2\22701022.01_CSM_FIG-01.DWG PLOT SCALE: 1:1 PLOT DATE: 2/24/2017 10:43 AM

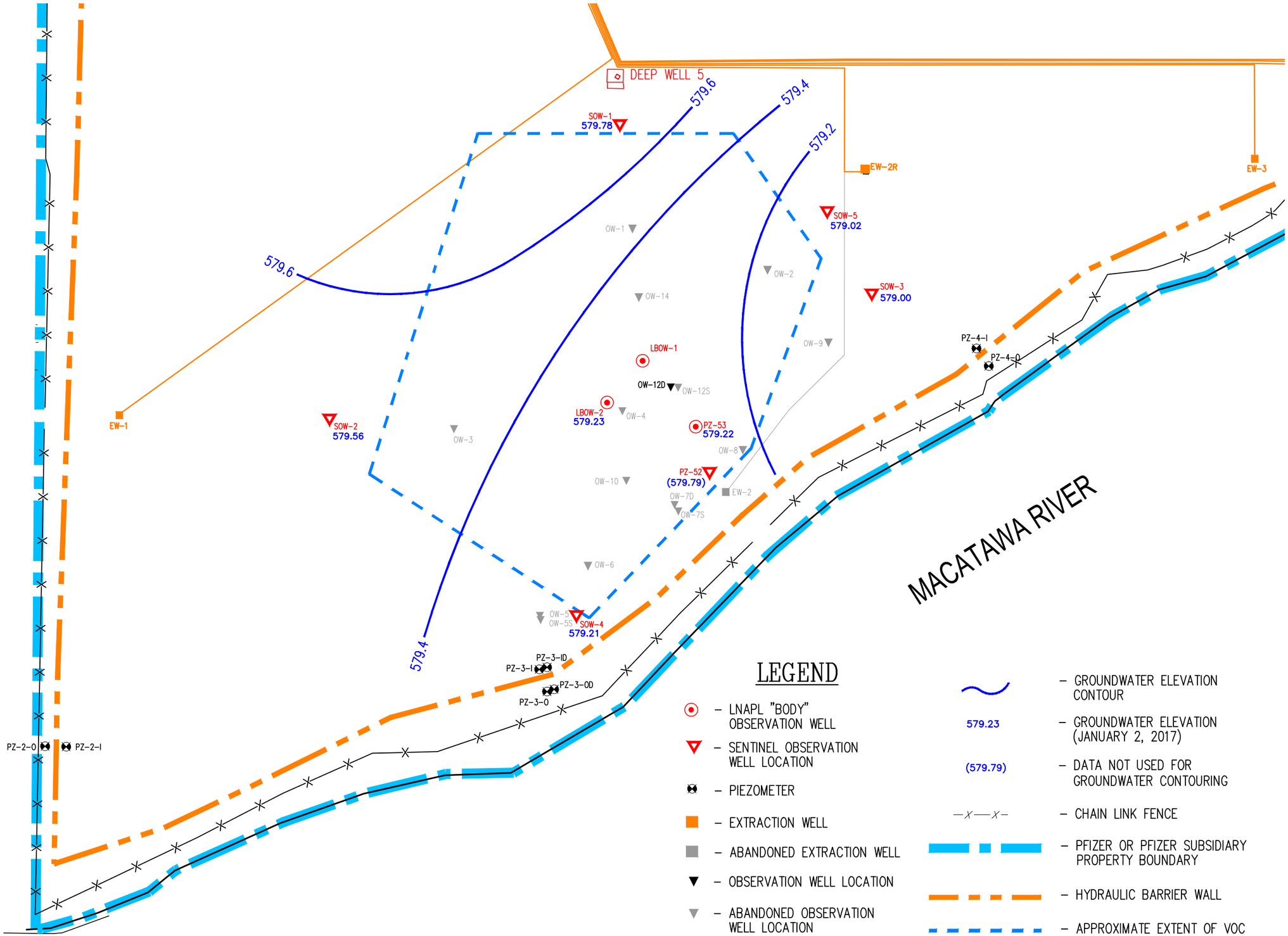

LEGEND

- LNAPL "BODY" OBSERVATION WELL
- SENTINEL OBSERVATION WELL LOCATION
- PIEZOMETER
- EXTRACTION WELL
- ABANDONED EXTRACTION WELL
- OBSERVATION WELL LOCATION
- ABANDONED OBSERVATION WELL LOCATION
- GROUNDWATER ELEVATION CONTOUR
- 579.23 – GROUNDWATER ELEVATION (JANUARY 2, 2017)
- (579.79) – DATA NOT USED FOR GROUNDWATER CONTOURING
- —X—X— – CHAIN LINK FENCE
- PFIZER OR PFIZER SUBSIDIARY PROPERTY BOUNDARY
- HYDRAULIC BARRIER WALL
- APPROXIMATE EXTENT OF VOC MASS IN SOIL

Figure 2

GROUNDWATER ELEVATION CONTOURS (JAN. 1, 2017)

Warner Lambert
Holland, Michigan

BARR

4771 50th Street SE
Grand Rapids, MI 49512

CADD USER: Rick Gustner FILE: M:\DESIGN\22701022 WARNER LAMBERT\22701022.01_WL_GW-1-1-17_FIG-02.DWG PLOT SCALE: 1:1 PLOT DATE: 2/9/2017 4:14 PM

Table 1
Summary of LNAPL Thickness Observations
LNAPL Monitoring and Management Plan
Warner-Lambert, Holland, Michigan

Well Type	Well No.	01/02/2017
LNAPL Body Observation Wells	LBOW-1	1.54
	LBOW-2	0
	PZ-53	0
Sentinel Observation Wells	SOW-1	0
	SOW-2	0
	SOW-3	0
	SOW-4	0
	SOW-5	trace
	PZ-52	0

Notes:

Units = feet
LNAPL was recovered from LBOW-1
"trace" indicates that oil was visible on interface probe, but no measureable thickness in well

ATTACHMENT 1

LMMP INSPECTION LOG

Pfizer / Warner Lambert Plant Site
Holland, Michigan

LNAPL Inspection Record

Date: January 2, 2017 (1st Quarter 2017)

Weather: Start; Sun 0928. - (30.8°,-------- Barometer. 30.20)….. Finish: 0956 Sun (34.5° ,-------- Barometer. 30.21)

HCS Operation: EW #1- 2.5gpm, EW #2 6.5 gpm, EW#3 offline, EW #4- 3.75 gpm, EW #5- offline (Normal daily operation)

Observation Well Condition: Good.

Well Inspection Data

Well Type	Well No.	Time	Product ck/ method	Depth to Product (ft)	Depth to Water (ft)	Product Thickness(ft)	Product Recovered (L)	Notes: (e.g. product description, odors)
LNAPL Body Observation Wells ≥.5	LBOW-1	0956	Interface probe	9.04	10.58	1.54	1	Dark amber / black color. Strong odor present.
	LBOW-2	0940	Interface probe		9.56			No oil on probe,
	PZ-53	0937	Interface probe		10.82			No oil on probe, clear H2O
	OW-12D	_		N/A				Well no longer in study
Sentinel Observation Wells ≥ .2	SOW-1	0928	Interface probe		10.79			No oil on probe, clear H2O
	SOW-2	0932	Interface probe		10.41			No oil on probe, clear H2O
	SOW-3	0942	Interface probe		10.81			No oil on probe. clear H2O
	SOW-4	0934	Interface probe		9.99			No oil on probe, clear H2O
	SOW-5	0845	Interface probe		9.84			Black marbled appearance on probe. Strong odor present. C
	PZ-52	0938	Interface probe		9.64			No oil on probe, clear H2O

ATTACHMENT 2

RISK-BASED LNAPL EVALUATION AND RECOVERABILITY ANALYSIS

Risk-Based LNAPL Evaluation and Recoverability Analysis

Former Warner-Lambert Manufacturing Site
Holland, Michigan

This risk-based LNAPL evaluation and recoverability analysis provides the framework for refinement of the LNAPL management approach being implemented to address conditions in the Building #70 area at the former Warner-Lambert Manufacturing site in Holland, Michigan. The plan is described in the *LNAPL Monitoring and Management Plan* (LMMP) contained in Appendix N of the MDEQ-approved *Remedial Action Plan/Corrective Measures Implementation Plan*. This appendix also provides a summary of the history and nature of the LNAPL conditions. Initial discovery of the LNAPL condition was identified in 2002 and efforts to delineate the extent and to recover available LNAPL in observation wells was subsequently initiated. Routine observation well inspections and LNAPL recovery efforts, when LNAPL was observed, have been undertaken for nearly 15 years.

Operation of a Hydraulic Containment System which includes a full perimeter barrier wall and hydraulic control through extraction of groundwater from the contained volume was initiated in 2011. A primary objective of the LMMP is to provide a reliable means to assess the potential for LNAPL migration toward the barrier wall and groundwater extraction system to ensure that any such condition, if identified, does not compromise the operational efficacy of the Hydraulic Containment System. Implementation of the LMMP has successfully met this objective to-date and no indications of LNAPL migration have been observed.

This LNAPL evaluation includes an overview of the conceptual site model (CSM), a description of LNAPL recoverability, and a summary of evaluative activities and formal established controls to address exposure risks. These elements represent well established best practice for the development of LNAPL management strategies under federal, state and technical association guidance including MDEQ Guidance (*Non-Aqueous Phase Liquid (NAPL) Characterization, Remediation, and Management, June 2014)*, Interstate Technology Regulatory Council (*Evaluating LNAPL Remedial Technologies for Achieving Project Goals, December 2009*), and ASTM (Standard Guide for Development of Conceptual Site Models and Remediation Strategies for Light Nonaqueous-Phase Liquids, E2531-06) . Each of the primary elements of this evaluation are summarized below:

Conceptual Site Model

This CSM focuses on the occurrence, geologic setting, and mechanisms for LNAPL entry into observations wells. The area of LNAPL occurrence is located within an approximate 10,000 square foot area in the southeastern portion of the former Warner-Lambert manufacturing site. A map depicting the area where LNAPL has been periodically observed over approximately the past 10 years is provided as Figure 1. Indications of residual NAPL has been identified within a slightly broader area where elevated volatile organic compound (VOC) concentrations are present in soils. The depicted area of LNAPL occurrence has not changed throughout the past 10 years of observation well inspection and LNAPL accumulations in observation wells is typically limited to individual well(s) within the depicted area (e.g., LBOW-1 and OW-

12D) while other observation wells within the LNAPL occurrence area (e.g., LBOW-2 and PZ-53) are devoid of accumulated LNAPL.

LNAPL is present within a somewhat heterogeneous mixed fill unit that is primarily contained with a matrix of organic silt and peat. LNAPL has also been observed in isolated granular fill material within or overlying the organic silt/peat-rich fill material. As discussed in the LMMP, the area of elevated VOC and LNAPL occurrences is coincident with historical lagoon-like features which were present from approximately the late 1950's through the late 1960's/early 1970's. The operational history of these features was not documented, however it is known that the features have been absent for over 40 years.

Cross sectional depictions of the observation well screen placements are provided in Figures 2 and 3. In general, the older observation well screens were positioned to straddle the interface between the miscellaneous fill material/peat-silt unit and the upper sand aquifer (at a typical depth of 8 to 10 feet below grade) or were focused on granular fill material above the upper sand aquifer within the miscellaneous fill, or screened within fill material which evidenced visual indications of the presence of LNAPL during drilling. LNAPL-body observation wells (LBOWs) installed more recently as part of the LMMP (e.g., LBOW-1 and LBOW-2) were screened entirely within the upper sand aquifer immediately beneath the locally undulating contact with the overlying fill unit.

The prevailing hydrogeological conditions at the site over the past years create a "confined LNAPL" condition where the limited LNAPL that is present in the aquifer is trapped against the underside of the mixed fill (organic silt/peat) unit by upward hydraulic pressure. The periodic LNAPL accumulation within the current LBOWs represent periodic migration of localized LNAPL mass upward along the fill/sand aquifer contact and into the well filter pack/well screen. A depiction of this aspect of the conceptual site model is provided as Figure 4. The confining conditions present in the area and the isolated nature of observed LNAPL in LBOWs clearly illustrate that the LNAPL thickness observed at LBOW-1 is not reflective of a comparable thickness of LNAPL mass within the upper sand aquifer.

The confined LNAPL condition combines with the high organic carbon content and small pore volume configurations of the miscellaneous fill unit to limit the mobility and migration of LNAPL. Additionally, infiltration through the LNAPL occurrence area and associated potential for mobilization of residual NAPL is prevented by the presence of the near-surface HDPE liner. While the LNAPL mobility-inhibiting factors represented by the nature of the miscellaneous fill material and the infiltration barrier are fixed, there is potential for the confined LNAPL condition to change over time to an unconfined condition should groundwater levels fall beneath the upper sand aquifer/miscellaneous fill contact (defined for this area as static groundwater elevations of less than approximately 577 feet MSL). This should be taken into consideration in any modifications to the LMMP program.

LNAPL Risk Evaluation

The following represents an evaluation of risk for all reasonable and relevant pathways of migration/ exposure associated with the presence of free phase contamination in soil and ground water within the LNAPL Area.

Exposure/Migration Pathway	Risk Conclusion/Mitigation Measure
Ingestion (GW)	• No current exposure • Restrictive covenant prohibiting potable well installation
Direct Contact (Soil/GW)	• No current exposure • Access restrictions/site security prevent unauthorized access to site • Engineered barrier (HDPE cap/liner) prevents contact with impacted media • Cap inspection and maintenance program assures long-term integrity of engineered barrier • LNAPL Area is a designated "No Dig Area" (no invasive activities without prior approval by MDEQ)
Vapor Intrusion (Soil/GW)	• No current exposure (there are no occupied indoor air structures in LNAPL Area) • Restrictive covenant prohibiting construction of new structures intended for occupancy without additional assessment and/or installation of presumptive vapor mitigation measures
Ambient Air (Soil/GW)	• Ambient air assessment conducted in 2012 prior to installation of cap/liner using dynamic flux chamber sampling techniques showed no unacceptable risk to receptors (on-site or at fence line/perimeter)
Ground Water/Surface Water Interface (Soil/GW)	• Hydraulic Containment System and associated O&M prevent off-site migration • Performance Monitoring Program to assure long-term integrity of the system • LMMP has documented that LNAPL mass is not migrating/mobile
Erosion/Sediment Transport (Soil)	• Engineered barrier (composite HDPE cap/liner) • Shoreline stabilization • Inspection and maintenance program assures long-term integrity of cap and rip/rap
Ecological Receptors (Soil)	• Implementation of Inspection, Maintenance, and Ecological Protection Plan

This demonstrates that the remedial measures implemented in 2014/15 pursuant to the MDEQ-approved Final RAP/CMIP have abated and/or manage risk for all reasonable and relevant exposure/migration pathways associated with the presence of free phase contamination in soil and ground water in the LNAPL Area and that proper institutional controls are in place to notify future property owners of the presence of

NAPL to ensure that land use changes do not alter site conditions without proper evaluation. The potential for new risks being identified are minimized or eliminated by the presence of these engineered and institutional controls.

Recoverability Analysis

LNAPL recovery at the site was initiated in 2002 and has been completed on a regular basis through 2017. A summary of LNAPL recovery at the site from 2004 through initiation of the LMMP in 2014 is presented in Table 1 and LNAPL thickness observations and recovery information during the LMMP implementation is provided in Table 2. Concurrent observation of observation wells around the perimeter of the LNAPL occurrence area has demonstrated that LNAPL is not migrating. To demonstrate that LNAPL recovery has been completed to the "maximum extent practicable" under prevailing conditions at the site, estimates of the transmissivity of the LNAPL in observation wells where LNAPL accumulation and recovery were most prevalent using data collected during LNAPL observation and recovery.

Estimates of LNAPL transmissivity were made using calculation methods presented in ASTM E2856-11 (*Standard Guide for Estimation of LNAPL Transmissivity*, *2012*). The calculations were performed separately for data reflective of recovered LNAPL volumes and recovered volumes plus accumulated measured LNAPL thickness for instances where recovery was limited to a threshold measured thickness in specific observation wells. The procedures used to estimate LNAPL transmissivity are provided in Figure 5.

Using these methods and the data summarized in Tables 1 and 2 the estimated range of LNAPL transmissivity is from 0.00052 to 0.0039 ft^2/day. A summary of the estimated LNAPL transmissivity values calculated for individual observation wells is provided as Table 3. These estimated LNAPL transmissivity values are well below the 0.5 ft^2/day LNAPL transmissivity threshold presented in current MDEQ guidance[1] as the limit below which LNAPL typically cannot be recovered in a cost-effective and efficient manner. As a result, recovery records and estimated transmissivity values indicate that LNAPL has been recovered to the maximum extent practicable at this site under the existing confined LNAPL conditions.

Table 3 also lists the approximate elevation of the locally undulating contact between the miscellaneous fill unit and the underlying upper sand aquifer. The historical observation wells where the highest volume of LNAPL was observed/recovered (OW-11 and OW-13) coincide with the highest elevation of the aquifer/fill contact. Similarly, the aquifer/fill contact at LBOW-1 is the highest elevation of any existing LBOWs and is the only observation well where LNAPL is typically present. This relationship reinforces the conceptual site model interpretation that observed LNAPL thicknesses are reflective of localized accumulation of confined LNAPL within the observation well and not indicative of an accumulated thickness of LNAPL within the upper sand aquifer.

---

[1] MDEQ *Non-Aqueous Phase Liquid (NAPL) Characterization, Remediation, and Management, June 2014*

Summary/Conclusions

This LNAPL risk evaluation supports the conclusion that continued LNAPL recovery is not warranted under the prevailing confined LNAPL conditions at the site. The CSM documents that the NAPL is contained within a miscellaneous fill unit composed of high organic carbon/low permeability materials that serve to minimize its mobility. This is corroborated by over 15 years of monitoring data which show that the margins of the LNAPL occurrence area have not changed. The presence of the HDPE liner installed over the area in 2014 serves to further reduce LNAPL migration potential by eliminating infiltration through the occurrence area. The recoverability analysis demonstrates that the NAPL present is residual and has been recovered to the maximum extent practicable under existing site conditions. The risk evaluation documents that the presence of residual NAPL poses no risks under current site uses and that the potential for new risks has been minimized or eliminated through the engineered and institutional controls.

Recommendations

Based on the foregoing, continued monitoring and LNAPL recovery at the LBOWs is not necessary to assure that risk mitigation objectives continue to be met under the confined conditions that currently prevail at the site. It is, therefore, recommended that monitoring and LNAPL recovery activities at the LBOWs be terminated at the end of Year 3 of LMMP implementation (July 2017). Quarterly monitoring of SOWs should continue into Year 4 of the LMMP implementation to assure that the LNAPL continues to remain stable at the margins.

It is recommended that the monitoring frequency at the SOWs be increased to monthly (and monitoring at the LBOWs reinstituted at the same frequency) if: (1) the ground water elevations within the Hydraulic Containment System in the vicinity of the LNAPL area drop below an elevation of 577 feet MSL and/or there is evidence of material changes in the rate of product accumulation and/or migration at the SOWs. If there is no evidence of increased LNAPL mobility/migration under unconfined conditions after a period of one year, then monitoring will revert to quarterly frequency at the SOWs and the LBOWs will be abandoned.

Figures

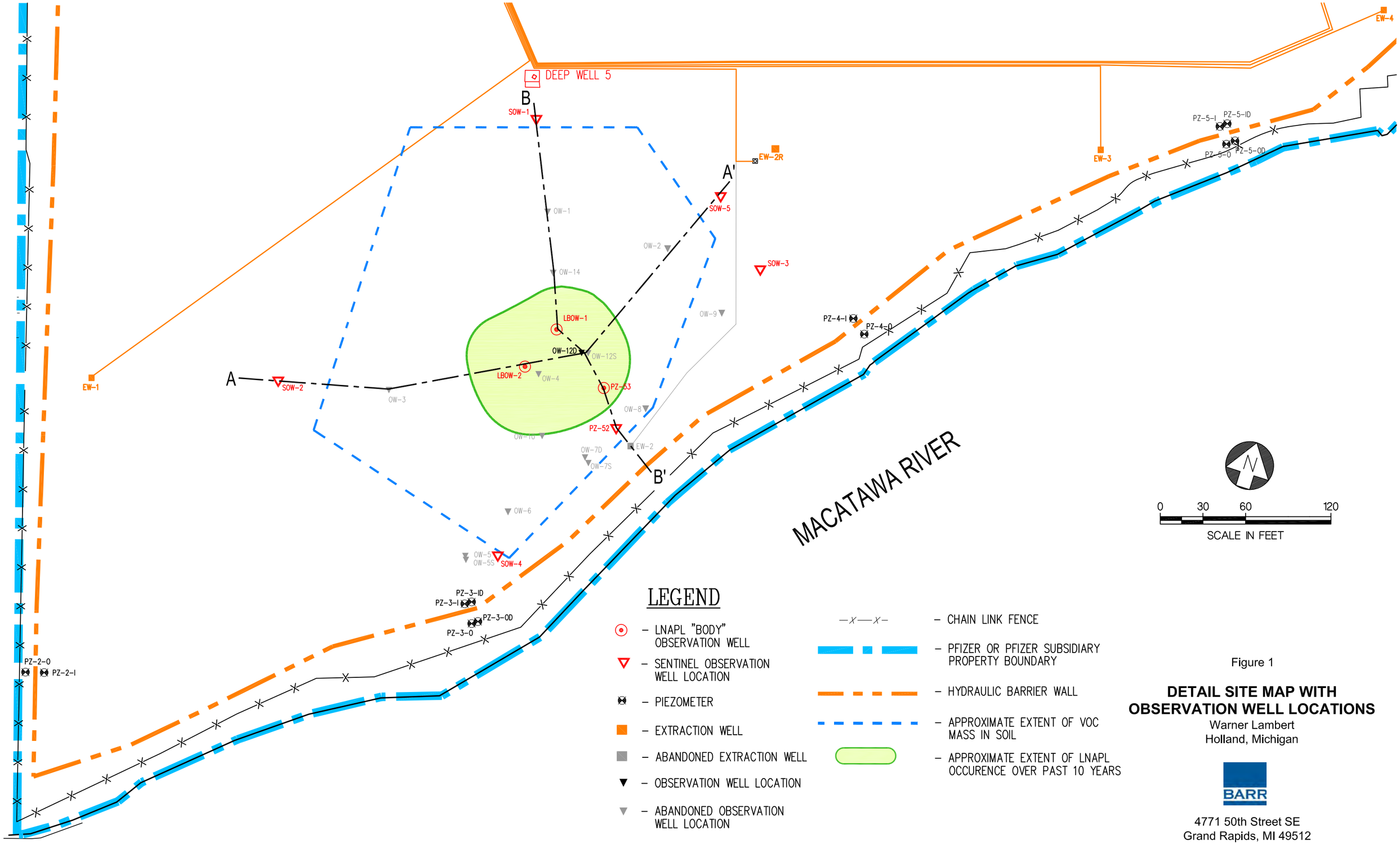

Figure 1

DETAIL SITE MAP WITH OBSERVATION WELL LOCATIONS

Warner Lambert
Holland, Michigan

BARR

4771 50th Street SE
Grand Rapids, MI 49512

CADD USER: Rick Gustner FILE: M:\DESIGN\22701022 WARNER LAMBERT\LNAPL ANNUAL REPORT – YEAR 2\22701022.01_CSM_FIG-01.DWG PLOT SCALE: 1:1 PLOT DATE: 2/15/2017 10:29 AM

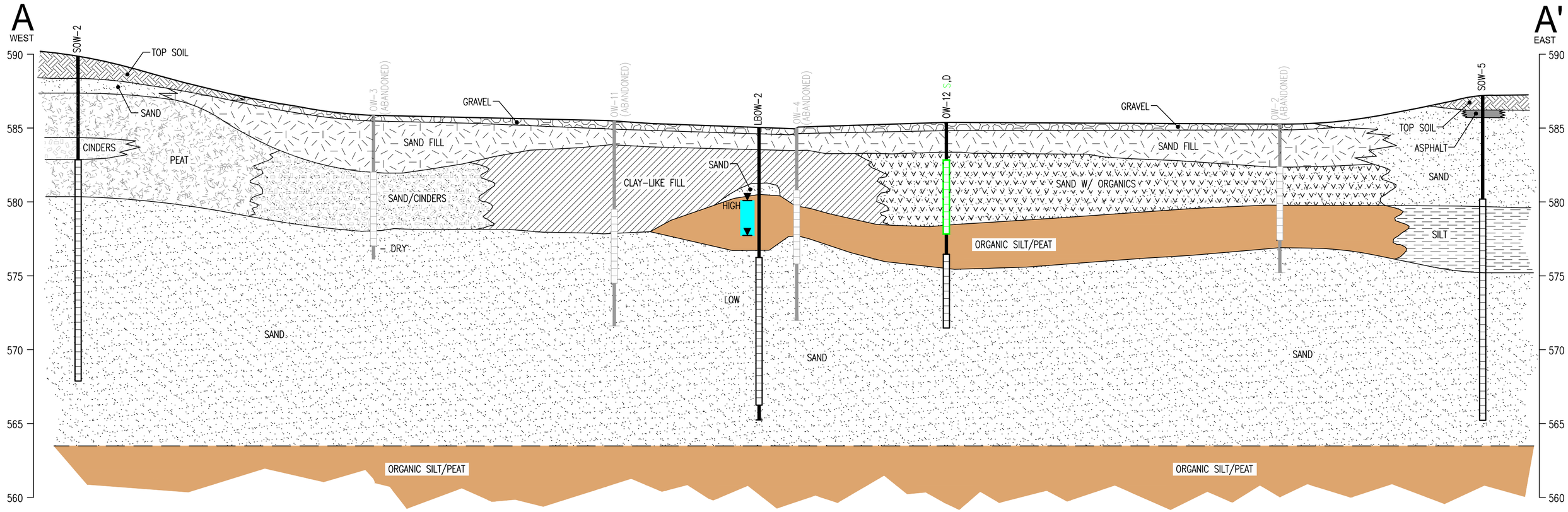

LEGEND

- TOPSOIL
- SAND FILL
- SAND (UPPER SAND AQUIFER)
- CLAY-LIKE FILL
- GRAVEL
- SILT
- ORGANIC SILT/PEAT
- PEAT
- SAND WITH ORGANICS
- SAND AND CINDERS
- ASPHALT
- PERMANENT WELL SCREEN
- STATIC WATER LEVEL RANGE DURING YEAR 2

0 10 20 40

HORIZONTAL SCALE IN FEET
4x VERTICAL EXAGGERATION

Figure 2

CROSS SECTION A-A' WITH OBSERVATION WELL SCHEMATIC

Warner Lambert
Holland, Michigan

BARR

4771 50th Street SE
Grand Rapids, MI 49512

CADD USER: Rick Gustner FILE: M:\DESIGN\22701022 WARNER LAMBERT\LNAPL ANNUAL REPORT - YEAR 2\22701022.01_CSM_FIG02.DWG PLOT SCALE: 1:1 PLOT DATE: 2/2/2017 2:34 PM

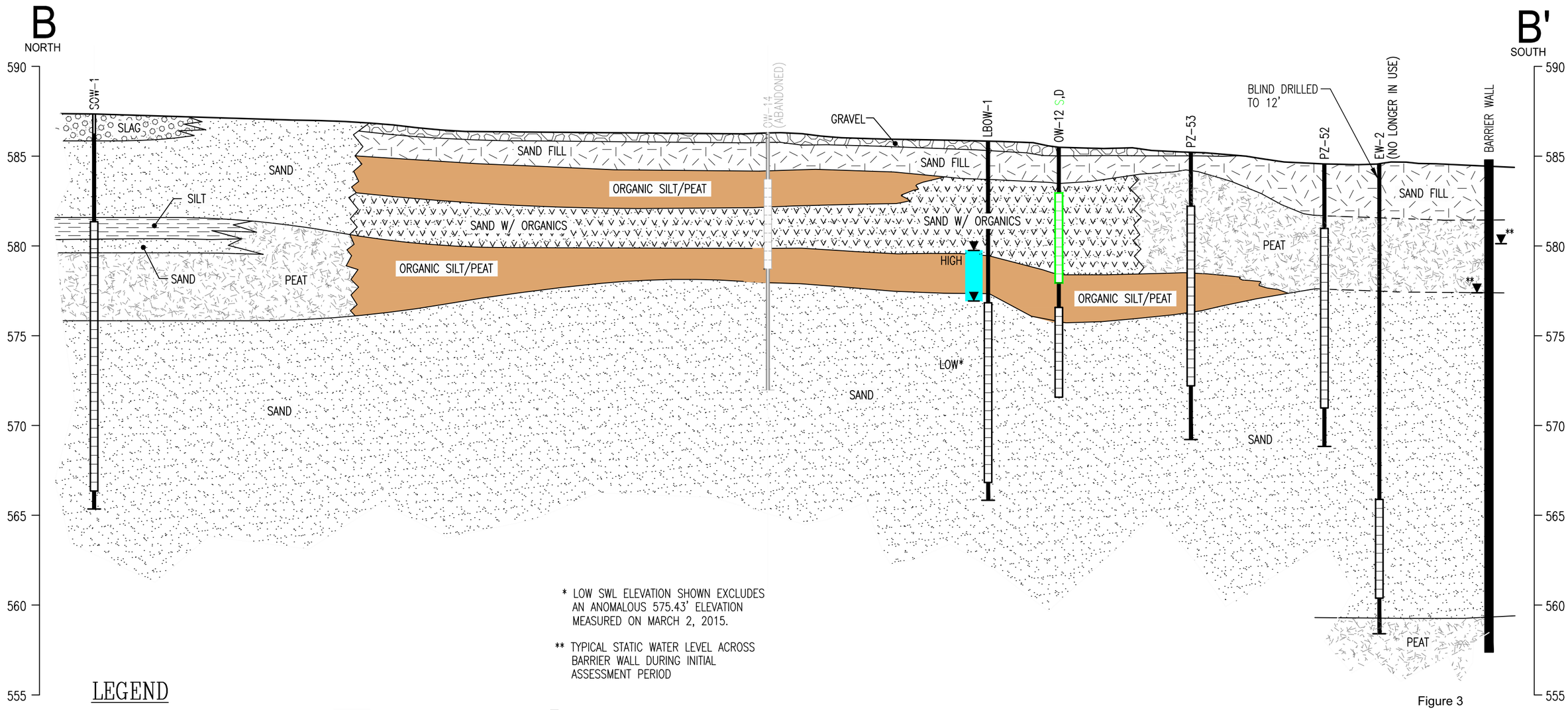

* LOW SWL ELEVATION SHOWN EXCLUDES AN ANOMALOUS 575.43' ELEVATION MEASURED ON MARCH 2, 2015.

** TYPICAL STATIC WATER LEVEL ACROSS BARRIER WALL DURING INITIAL ASSESSMENT PERIOD

LEGEND

- TOPSOIL
- SAND FILL
- SAND (UPPER SAND AQUIFER)
- CLAY-LIKE FILL
- GRAVEL
- SILT
- ORGANIC SILT/PEAT
- PEAT
- SAND WITH ORGANICS
- SAND AND CINDERS
- SLAG
- PERMANENT WELL SCREEN
- STATIC WATER LEVEL RANGE DURING YEAR 2

0 10 20 40

HORIZONTAL SCALE IN FEET
4x VERTICAL EXAGGERATION

Figure 3

CROSS SECTION B-B' WITH OBSERVATION WELL SCHEMATIC

Warner Lambert
Holland, Michigan

BARR

4771 50th Street SE
Grand Rapids, MI 49512

CADD USER: Rick Gustner FILE: M:\DESIGN\22701022 WARNER LAMBERT\LNAPL ANNUAL REPORT - YEAR 2\22701022.01_CSM_FIG03.DWG PLOT SCALE: 1:1 PLOT DATE: 2/2/2017 3:13 PM

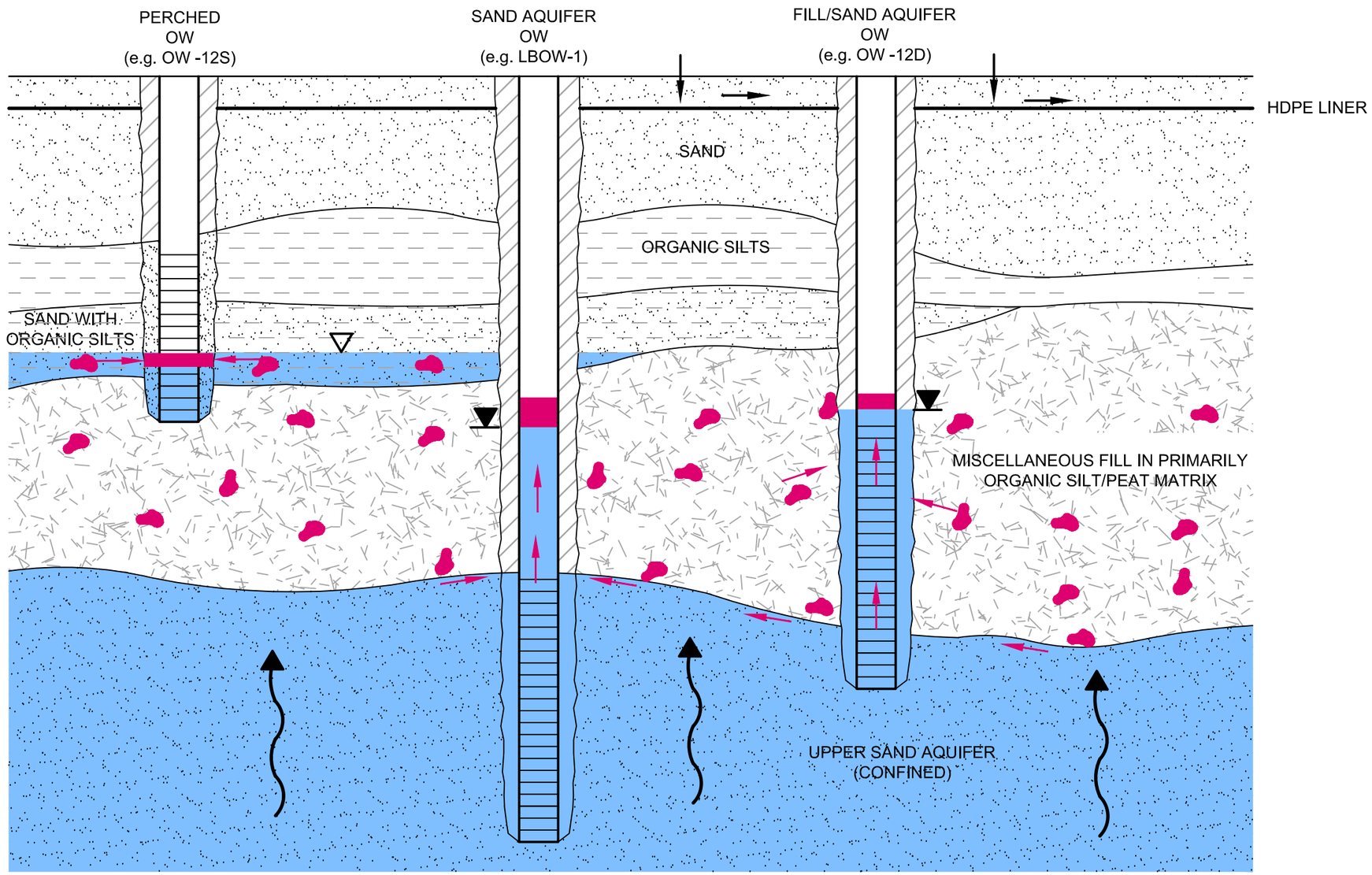

PRECIPITATION/INFILTRATION FLOW

GROUNDWATER FLOW POTENTIAL

PERCHED GROUNDWATER

GROUNDWATER LEVEL

LNAPL ACCUMULATION IN OBSERVATION WELL

LNAPL FLOW (INFERRED)

LNAPL OCCURRENCE IN MISCELLANEOUS FILL UNIT

Figure 4

LNAPL CONCEPTUAL MODEL

Warner Lambert
Holland, Michigan

BARR

4771 50th Street SE
Grand Rapids, MI 49512

CADD USER: Rick Gardner FILE: M:\DESIGN\22701022 WARNER LAMBERT\LNAPL ANNUAL REPORT - YEAR 2\22701022.01_CSM_FIG04.DWG PLOT SCALE: 1:1 PLOT DATE: 2/6/2017 10:50 AM

Figure 5
LNAPL Transmissivity Estimation procedure

LNAPL Transmissivity was estimated using methods summarized in ASTM E2856-11, *Standard Guide for Estimation of LNAPL Transmissivity*. Specifically, the following equation (Equation 16) from the ASTM standard for use in conjunction with manual skimming data was utilized

$$T_n = \frac{Q_n ln\left(\frac{R_{oi}}{r_w}\right)}{2\pi s_n}$$

Where:

Tn = LNAPL Transmissivity (ft^2/day)

Qn = LNAPL Recovery rate (ft^3/day) *(note: total volume recovered or measured in well over the course of the entire observation period for specific wells was utilized)*

ln(Roi/rw) = 4.6 *(note 2 from ASTM standard suggests use of this value)*

S_n = average LNAPL thickness observed (ft) *(ASTM standard indicates the use of estimated LNAPL thickness for perched conditions. Under confined conditions the standard suggests the use of a correction factor for LNAPL density which would drive the value of Sn up and the resultant Tn estimate down. This density correction was not utilized for the site calculations to provide an additional measure of conservatism)*

Data utilized to calculate Tn for specific wells is provided in Tables 1 through 3.

Tables

Table 1
Summary of LNAPL Observations (Pre-LMMP installed wells)
Warner-Lambert
Holland, Michigan

OW-3	OW-3	OW-3	OW-4	OW-4	OW-4	OW-11	OW-11	OW-11	OW-12D	OW-12D	OW-12D	OW-12S	OW-12S	OW-12S	OW-13	OW-13	OW-13	PZ-53	PZ-53	PZ-53
Date	Product (ft)	Product (gal)	**Date**	Product (ft)	Product (gal)	**Date**	Product (ft)	Product (gal)	**Date**	Product (ft)	Product (gal)	**Date**	Product (ft)	Product (gal)	**Date**	Product (ft)	Product (gal)	**Date**	Product (ft)	Product (gal)
11/07/07	1.69	0.29	05/12/04	0	0.00	05/12/04	0.10	0.02	01/02/07	0.15	0.03	11/16/07	0.09	0.02	05/12/04	0.00	0.00	03/01/11	0.00	0.00
11/09/07	1.8	0.31	05/14/04	0.00	0.00	05/14/04	0.12	0.02	01/09/07	0.23	0.04	11/19/07	0.95	0.17	05/14/04	0.00	0.00	03/08/11	0.08	0.01
11/12/07	1.65	0.29	05/19/04	0.00	0.00	05/19/04	0.36	0.06	01/15/07	0.33	0.06	11/26/07	1.22	0.21	05/19/04	0.00	0.00	03/15/11	0.00	0.00
11/14/07	0.49	0.09	05/21/04	0.03	0.01	05/21/04	0.45	0.08	01/23/07	0.33	0.06	12/03/07	1.00	0.17	05/21/04	0.01	0.00	03/22/11	0.00	0.00
11/16/07	1.25	0.22	05/24/04	0.00	0.00	05/24/04	0.40	0.07	01/30/07	0.30	0.05	12/12/07	1.23	0.21	05/24/04	0.00	0.00	03/28/11	0.20	0.03
11/19/07	1.48	0.26	05/26/04	0.05	0.01	05/26/04	0.30	0.05	02/06/07	0.63	0.11	12/14/07	1.32	0.23	05/26/04	0.00	0.00	04/05/11	0.01	0.00
11/21/07	1.64	0.29	05/28/04	0.00	0.00	05/28/04	0.55	0.10	02/10/07	0.30	0.05	12/17/07	1.39	0.24	05/28/04	0.00	0.00	04/12/11	0.00	0.00
11/26/07	1.65	0.29	06/03/04	0.00	0.00	06/03/04	1.15	0.20	03/12/07	0.33	0.06	12/20/07	1.22	0.21	06/03/04	0.15	0.03	04/19/11	0.00	0.00
11/28/07	1.31	0.23	06/08/04	0.00	0.00	06/08/04	1.40	0.24	03/26/07	0.15	0.03	12/21/07	1.15	0.20	06/08/04	0.04	0.01	04/29/11	0.00	0.00
11/30/07	1.1	0.19	06/18/04	0.25	0.04	06/18/04	1.30	0.23	04/02/07	0.30	0.05	12/26/07	1.40	0.24	06/18/04	0.01	0.00	05/03/11	0.01	0.00
12/03/07	1.16	0.20	06/11/04	0.00	0.00	06/11/04	1.20	0.21	04/09/07	0.35	0.06	12/27/07	1.37	0.24	06/11/04	0.00	0.00	05/10/11	0.05	0.01
12/05/07	1.05	0.18	06/14/04	0.00	0.00	06/14/04	1.25	0.22	04/16/07	0.50	0.09	12/28/07	1.31	0.23	06/14/04	0.00	0.00	05/17/11	0.07	0.01
12/07/07	0.92	0.16	06/21/04	0.00	0.00	06/21/04	1.00	0.17	04/23/07	0.90	0.16	12/31/07	1.38	0.24	06/21/04	0.00	0.00	05/24/11	0.13	0.02
12/11/07	1.3	0.23	06/23/04	0.00	0.00	06/23/04	1.20	0.21	05/10/07	1.88	0.33	01/02/08	1.51	0.26	06/23/04	0.00	0.00	06/01/11	0.10	0.02
12/12/07	1.36	0.24	06/25/04	0.00	0.00	06/25/04	1.30	0.23	05/15/07	0.12	0.02	01/04/08	1.62	0.28	06/25/04	0.05	0.01	06/08/11	0.14	0.02
12/14/07	1.38	0.24	06/28/04	0.00	0.00	06/28/04	1.45	0.25	05/31/07	0.05	0.01	01/07/08	1.08	0.19	06/28/04	0.00	0.00	06/14/11	0.09	0.02
12/17/07	1.49	0.26	07/12/04	0.20	0.03	07/12/04	2.00	0.35	06/07/07	0.10	0.02	01/09/08	1.30	0.23	07/12/04	0.10	0.02	06/21/11	0.16	0.03
12/21/07	1.39	0.24	07/14/04	0.11	0.02	07/14/04	1.91	0.33	06/13/07	0.15	0.03	01/11/08	0.15	0.03	07/14/04	0.78	0.14	06/28/11	0.18	0.03
12/26/07	1.36	0.24	07/16/04	0.65	0.11	07/16/04	1.75	0.30	06/20/07	0.11	0.02	01/15/08	0.46	0.08	07/16/04	0.28	0.05	07/06/11	0.28	0.05
12/27/07	1.31	0.23	07/19/04	1.20	0.21	07/19/04	2.55	0.44	06/27/07	0.10	0.02	01/16/08	0.59	0.10	07/19/04	0.40	0.07	07/12/11	0.10	0.02
12/28/07	1.34	0.23	07/22/04	1.95	0.34	07/22/04	2.93	0.51	07/11/07	0.40	0.07	01/18/08	0.27	0.05	07/22/04	0.45	0.08	07/20/11	0.00	0.00
12/31/07	1.32	0.23	07/23/04	0.50	0.09	07/23/04	1.75	0.30	07/19/07	0.43	0.07	01/22/08	0.90	0.16	07/23/04	0.55	0.10	07/27/11	0.01	0.00
01/02/08	1.4	0.24	07/26/04	0.60	0.10	07/26/04	2.40	0.42	07/24/07	0.62	0.11	01/28/08	1.10	0.19	07/28/04	0.65	0.11	08/02/11	0.30	0.05
01/04/08	1.42	0.25	07/28/04	0.70	0.12	07/28/04	2.68	0.47	08/03/07	0.56	0.10	02/06/08	0.58	0.10	07/30/04	0.68	0.12	08/10/11	0.40	0.07
01/07/08	1.3	0.23	07/30/04	1.08	0.19	07/30/04	2.01	0.35	08/08/07	0.52	0.09	02/07/08	0.63	0.11	08/02/04	0.90	0.16	08/17/11	0.42	0.07
01/09/08	1.02	0.18	08/02/04	1.87	0.33	08/02/04	2.12	0.37	08/16/07	0.63	0.11	02/11/08	1.06	0.18	08/04/04	0.95	0.17	08/24/11	0.21	0.04
01/11/08	1	0.17	08/04/04	1.70	0.30	08/04/04	2.44	0.42	08/22/07	0.45	0.08	02/13/08	0.87	0.15	08/06/04	1.09	0.19	08/30/11	0.38	0.07
01/15/08	0.9	0.16	08/06/04	1.69	0.29	08/06/04	2.59	0.45	08/28/07	0.49	0.09	02/18/08	0.30	0.05	08/10/04	0.50	0.09	09/07/11	0.30	0.05
01/16/08	0.43	0.07	08/10/04	1.00	0.17	08/10/04	2.05	0.36	09/05/07	0.66	0.11	02/22/08	1.25	0.22	08/11/04	0.73	0.13	09/13/11	0.12	0.02
01/18/08	0.27	0.05	08/11/04	1.20	0.21	08/11/04	1.22	0.21	09/12/07	1.02	0.18	02/25/08	1.79	0.31	08/13/04	0.81	0.14	09/21/11	0.45	0.08
02/25/08	0.02	0.00	08/13/04	0.90	0.16	08/13/04	0.99	0.17	09/19/07	1.10	0.19	02/27/08	0.33	0.06	08/16/04	1.10	0.19	09/29/11	0.55	0.10
02/27/08	0.01	0.00	08/16/04	1.6	0.28	08/16/04	1.54	0.27	09/25/07	0.17	0.03	02/29/08	0.58	0.10	08/18/04	1.32	0.23	10/04/11	0.77	0.13
03/03/08	0.2	0.03	08/18/04	1.95	0.34	08/18/04	1.05	0.18	09/29/07	0.30	0.05	03/05/08	0.85	0.15	08/20/04	1.55	0.27	10/11/11	0.55	0.10
03/12/08	0.32	0.06	08/20/04	2.3	0.40	08/20/04	1.05	0.18	10/02/07	0.30	0.05	03/28/08	2.24	0.39	08/23/04	0.30	0.05	10/18/11	0.15	0.03
03/14/08	0.3	0.05	08/23/04	1	0.17	08/23/04	0.70	0.12	10/04/07	0.60	0.10	04/07/08	0.33	0.06	08/25/04	0.67	0.12	10/25/11	0.20	0.03
03/21/08	0.9	0.16	08/25/04	2.49	0.43	08/25/04	1.92	0.33	10/05/07	0.53	0.09	04/11/08	1.59	0.28	08/27/04	0.97	0.17	10/31/11	0.40	0.07
03/24/08	0.8	0.14	08/27/04	3	0.52	08/27/04	1.86	0.32	10/08/07	0.78	0.14	04/14/08	1.57	0.27	08/30/04	1.25	0.22	11/18/11	0.01	0.00
03/27/08	0.95	0.17	08/30/04	1.35	0.23	08/30/04	2.58	0.45	10/10/07	0.03	0.01	04/17/08	0.12	0.02	09/01/04	1.55	0.27	11/28/11	0.07	0.01
03/28/08	0.52	0.09	09/01/04	1.53	0.27	09/01/04	2.35	0.41	10/12/07	0.01	0.00	04/18/08	1.36	0.24	09/03/04	0.51	0.09	12/07/11	0.03	0.01
04/02/08	0.05	0.01	09/03/04	0.3	0.05	09/03/04	1.74	0.30	10/15/07	0.90	0.16	04/22/08	0.02	0.00	09/09/04	1.50	0.26	12/15/11	0.12	0.02
04/04/08	0	0.00	09/09/04	2.06	0.36	09/09/04	2.34	0.41	10/17/07	0.60	0.10	04/24/08	0.55	0.10	09/10/04	0.11	0.02	12/27/11	0.08	0.01
04/07/08	0.76	0.13	09/10/04	1.04	0.18	09/10/04	0.94	0.16	10/19/07	0.02	0.00	04/28/08	1.06	0.18	09/14/04	2.20	0.38	01/11/12	0.20	0.03
04/10/08	0.18	0.03	09/14/04	2.5	0.44	09/14/04	1.80	0.31	10/22/07	0.07	0.01	05/01/08	0.29	0.05	09/15/04	2.37	0.41	01/24/12	0.17	0.03
04/11/08	0.07	0.01	09/15/04	2.76	0.48	09/15/04	2.13	0.37	10/25/07	0.03	0.01	05/02/08	0.38	0.07	09/20/04	0.68	0.12	02/07/12	0.35	0.06
04/14/08	0.14	0.02	09/20/04	2.8	0.49	09/20/04	1.05	0.18	10/26/07	0.05	0.01	05/06/08	0.40	0.07	09/22/04	1.40	0.24	02/21/12	0.16	0.03
04/17/08	0.51	0.09	09/22/04	2.9	0.50	09/22/04	2.84	0.49	10/29/07	0.26	0.05	05/08/08	0.42	0.07	09/24/04	1.84	0.32	03/06/12	0.27	0.05
04/18/08	0.33	0.06	09/24/04	1.67	0.29	09/24/04	2.52	0.44	10/31/07	0.28	0.05	05/12/08	1.53	0.27	09/27/04	2.00	0.35	03/14/12	0.12	0.02

Table 1
Summary of LNAPL Observations (Pre-LMMP installed wells)
Warner-Lambert
Holland, Michigan

OW-3	OW-3	OW-3	OW-4	OW-4	OW-4	OW-11	OW-11	OW-11	OW-12D	OW-12D	OW-12D	OW-12S	OW-12S	OW-12S	OW-13	OW-13	OW-13	PZ-53	PZ-53	PZ-53
Date	Product (ft)	Product (gal)	**Date**	Product (ft)	Product (gal)	**Date**	Product (ft)	Product (gal)	**Date**	Product (ft)	Product (gal)	**Date**	Product (ft)	Product (gal)	**Date**	Product (ft)	Product (gal)	**Date**	Product (ft)	Product (gal)
04/22/08	0.61	0.11	09/27/04	2.95	0.51	09/27/04	2.70	0.47	11/02/07	0.34	0.06	05/15/08	1.58	0.27	09/29/04	2.26	0.39	04/04/12	0.20	0.03
04/24/08	0.78	0.14	09/29/04	3.29	0.57	09/29/04	2.57	0.45	11/05/07	0.46	0.08	05/20/08	1.51	0.26	10/01/04	2.40	0.42	04/11/12	0.29	0.05
04/28/08	0.25	0.04	10/01/04	3.5	0.61	10/01/04	2.90	0.50	11/07/07	0.05	0.01	05/21/08	0.31	0.05	10/04/04	2.65	0.46	04/18/12	0.02	0.00
05/01/08	0.6	0.10	10/04/04	3.05	0.53	10/04/04	2.00	0.35	11/09/07	0.02	0.00	05/23/08	0.07	0.01	10/08/04	2.26	0.39	04/25/12	0.12	0.02
05/02/08	0.59	0.10	10/08/04	0.89	0.15	10/08/04	1.20	0.21	11/12/07	0.21	0.04	05/27/08	1.64	0.29	10/11/04	1.30	0.23	05/02/12	0.02	0.00
05/06/08	0.51	0.09	10/11/04	1.15	0.20	10/11/04	1.20	0.21	11/14/07	0.01	0.00	05/29/08	1.55	0.27	10/13/04	1.87	0.33	05/08/12	0.07	0.01
05/08/08	0.67	0.12	10/13/04	1.95	0.34	10/13/04	2.00	0.35	11/16/07	0.08	0.01	06/02/08	1.55	0.27	10/15/04	2.26	0.39	05/16/12	0.06	0.01
05/12/08	0.13	0.02	10/15/04	2.26	0.39	10/15/04	1.65	0.29	11/19/07	0.00	0.00	06/04/08	1.94	0.34	10/18/04	1.60	0.28	05/23/12	0.10	0.02
05/15/08	0.1	0.02	10/18/04	1.5	0.26	10/18/04	1.65	0.29	11/21/07	0.09	0.02	06/06/08	2.11	0.37	10/20/04	2.59	0.45	05/29/12	0.14	0.02
05/20/08	0.14	0.02	10/20/04	1.8	0.31	10/20/04	1.80	0.31	11/26/07	0.08	0.01	06/11/08	1.65	0.29	10/25/04	2.70	0.47	06/01/12	0.10	0.02
05/21/08	0.22	0.04	10/25/04	1.65	0.29	10/25/04	1.46	0.25	11/28/07	0.15	0.03	06/13/08	1.19	0.21	10/27/04	2.95	0.51	06/06/12	0.06	0.01
05/23/08	0.13	0.02	10/27/04	1.65	0.29	10/27/04	1.55	0.27	11/30/07	0.02	0.00	06/16/08	2.07	0.36	10/29/04	3.10	0.54	06/13/12	0.20	0.03
05/27/08	0.08	0.01	11/10/04	3.58	0.62	10/29/04	1.05	0.18	12/03/07	0.02	0.00	06/20/08	1.21	0.21	11/02/04	3.00	0.52	06/20/12	0.10	0.02
05/29/08	0.07	0.01	11/12/04	3.61	0.63	11/02/04	1.30	0.23	12/05/07	0.08	0.01	06/23/08	1.77	0.31	11/10/04	1.31	0.23	06/27/12	0.15	0.03
06/02/08	0.48	0.08	11/15/04	1.22	0.21	11/10/04	0.76	0.13	12/07/07	0.02	0.00	06/26/08	2.07	0.36	11/12/04	1.42	0.25	07/03/12	0.00	0.00
06/04/08	0.5	0.09	11/18/04	0.92	0.16	11/12/04	0.82	0.14	12/11/07	0.50	0.09	06/27/08	2.21	0.38	11/15/04	3.70	0.64	07/11/12	0.00	0.00
06/06/08	0.17	0.03	11/23/04	1.5	0.26	11/15/04	1.15	0.20	12/12/07	0.24	0.04	06/30/08	2.11	0.37	11/18/04	1.90	0.33	07/18/12	0.00	0.00
06/11/08	0.4	0.07	12/09/04	1.5	0.26	11/18/04	1.32	0.23	12/21/07	0.08	0.01	07/01/08	1.82	0.32	11/23/04	3.70	0.64	07/25/12	0.00	0.00
06/13/08	0.56	0.10	12/14/04	1.3	0.23	11/23/04	1.10	0.19	12/26/07	0.30	0.05	07/07/08	3.10	0.54	12/01/04	3.73	0.65	09/14/12	0.14	0.02
06/16/08	1.13	0.20	12/17/04	1.46	0.25	12/03/04	0.54	0.09	12/31/07	1.66	0.29	07/09/08	2.35	0.41	12/03/04	2.92	0.51	10/12/12	0.45	0.08
06/20/08	0.67	0.12	12/23/04	1.45	0.25	12/09/04	1.00	0.17	01/07/08	0.03	0.01	07/11/08	2.32	0.40	12/09/04	2.50	0.44	10/18/12	0.27	0.05
06/23/08	1.5	0.26	01/05/05	1.56	0.27	12/14/04	0.75	0.13	01/15/08	0.03	0.01	07/15/08	3.39	0.59	12/17/04	3.69	0.64			
06/26/08	0.11	0.02	01/10/05	1.73	0.30	12/17/04	1.15	0.20	01/22/08	0.22	0.04	07/17/08	3.31	0.58	12/23/04	2.17	0.38			
06/27/08	0.22	0.04	02/10/05	1.7	0.30	12/23/04	1.41	0.25	01/28/08	1.21	0.21	07/22/08	3.09	0.54	12/29/04	3.05	0.53			
06/30/08	0.26	0.05	02/11/05	1.81	0.31	12/28/04	1.68	0.29	02/06/08	1.24	0.22	07/23/08	3.06	0.53	01/05/05	2.99	0.52			
07/01/08	0.17	0.03	02/16/05	0.09	0.02	12/29/04	2.65	0.46	02/11/08	0.40	0.07	07/25/08	3.07	0.53	02/10/05	3.70	0.64			
07/07/08	0.1	0.02	02/17/05	0.05	0.01	01/05/05	1.88	0.33	02/18/08	0.00	0.00	07/28/08	2.93	0.51	02/11/05	3.46	0.60			
07/09/08	0	0.00	02/25/05	0.04	0.01	01/10/05	0.75	0.13	02/22/08	0.31	0.05	07/30/08	2.36	0.41	02/16/05	1.75	0.30			
07/11/08	0.12	0.02	03/09/05	0.11	0.02	01/14/05	1.20	0.21	02/27/08	0.00	0.00	08/01/08	2.50	0.44	02/17/05	1.85	0.32			
07/15/08	0.25	0.04	03/22/05	0.25	0.04	01/21/05	1.50	0.26	03/05/08	0.00	0.00	08/04/08	2.54	0.44	03/09/05	2.61	0.45			
07/17/08	0.29	0.05	03/23/05	0.28	0.05	02/11/05	1.35	0.23	03/28/08	0.14	0.02	08/06/08	1.57	0.27	03/17/05	2.30	0.40			
07/22/08	0.29	0.05	03/24/05	0.43	0.07	02/16/05	1.40	0.24	04/07/08	0.08	0.01	08/08/08	2.18	0.38	03/18/05	2.42	0.42			
07/23/08	0.28	0.05	03/28/05	0.15	0.03	02/17/05	1.48	0.26	04/14/08	0.67	0.12	08/13/08	2.27	0.39	03/22/05	2.20	0.38			
07/25/08	0.23	0.04	03/30/05	0.55	0.10	03/09/05	2.00	0.35	04/24/08	1.07	0.19	08/15/08	2.50	0.44	03/23/05	2.50	0.44			
07/28/08	0.27	0.05	04/04/05	0.35	0.06	03/17/05	2.80	0.49	04/28/08	0.68	0.12	08/21/08	2.32	0.40	03/24/05	2.51	0.44			
07/30/08	0.32	0.06	04/06/05	0.65	0.11	03/18/05	2.75	0.48	05/08/08	0.63	0.11	08/22/08	1.81	0.31	03/28/05	0.90	0.16			
08/01/08	0.25	0.04	04/15/05	0.63	0.11	03/22/05	2.75	0.48	05/15/08	0.61	0.11	08/25/08	1.53	0.27	03/30/05	1.43	0.25			
08/04/08	0.25	0.04	04/18/05	1.3	0.23	03/23/05	2.75	0.48	05/20/08	0.34	0.06	08/27/08	1.92	0.33	04/01/05	0.05	0.01			
08/06/08	0.23	0.04	04/29/05	1.85	0.32	03/24/05	2.75	0.48	05/27/08	0.40	0.07	08/29/08	1.39	0.24	04/04/05	0.40	0.07			
08/08/08	0.25	0.04	05/13/05	2.52	0.44	03/28/05	2.75	0.48	06/04/08	0.80	0.14	09/03/08	1.32	0.23	04/06/05	0.98	0.17			
08/13/08	0.27	0.05	05/23/05	2.69	0.47	03/30/05	2.75	0.48	06/11/08	0.79	0.14	09/04/08	1.96	0.34	04/15/05	0.95	0.17			
08/15/08	0.29	0.05	05/26/05	1.2	0.21	04/01/05	1.00	0.17	06/16/08	0.80	0.14	09/09/08	1.42	0.25	04/18/05	1.80	0.31			
08/21/08	0.22	0.04	05/27/05	1.3	0.23	04/04/05	1.90	0.33	06/23/08	1.25	0.22	09/11/08	1.99	0.35	04/29/05	2.30	0.40			
09/11/08	0.11	0.02	06/03/05	1.16	0.20	04/06/05	2.08	0.36	07/07/08	0.71	0.12	09/12/08	1.50	0.26	05/13/05	2.76	0.48			
10/03/08	0.11	0.02	06/15/05	3.08	0.54	04/15/05	2.01	0.35	07/15/08	0.94	0.16	09/15/08	1.75	0.30	05/23/05	2.70	0.47			
10/07/08	0.13	0.02	06/17/05	2.92	0.51	04/29/05	1.42	0.25	07/23/08	0.81	0.14	09/17/08	1.84	0.32	05/26/05	2.10	0.37			
10/08/08	0.06	0.01	06/23/05	2.93	0.51	06/23/05	1.50	0.26	07/28/08	1.45	0.25	10/22/08	1.96	0.34	05/27/05	2.50	0.44			

Table 1
Summary of LNAPL Observations (Pre-LMMP installed wells)
Warner-Lambert
Holland, Michigan

OW-3	OW-3	OW-3	OW-4	OW-4	OW-4	OW-11	OW-11	OW-11	OW-12D	OW-12D	OW-12D	OW-12S	OW-12S	OW-12S	OW-13	OW-13	OW-13	PZ-53	PZ-53	PZ-53
Date	Product (ft)	Product (gal)	**Date**	Product (ft)	Product (gal)	**Date**	Product (ft)	Product (gal)	**Date**	Product (ft)	Product (gal)	**Date**	Product (ft)	Product (gal)	**Date**	Product (ft)	Product (gal)	**Date**	Product (ft)	Product (gal)
10/13/08	0.15	0.03	06/24/05	2.85	0.50	06/24/05	1.68	0.29	08/04/08	0.42	0.07	10/24/08	2.05	0.36	06/03/05	2.59	0.45			
10/15/08	0.11	0.02	06/29/05	3.22	0.56	06/29/05	2.21	0.38	08/15/08	0.04	0.01	10/27/08	2.41	0.42	06/15/05	3.00	0.52			
10/17/08	0.21	0.04	07/01/05	3.23	0.56	07/01/05	2.37	0.41	08/21/08	0.02	0.00	10/31/08	2.58	0.45	06/17/05	3.04	0.53			
10/22/08	0.23	0.04	07/08/05	3.16	0.55	07/08/05	2.62	0.46	08/22/08	0.00	0.00	11/03/08	1.87	0.33	06/23/05	3.10	0.54			
10/31/08	0.2	0.03	07/15/05	3.19	0.56	07/15/05	2.66	0.46	08/25/08	0.00	0.00	11/05/08	0.16	0.03	06/24/05	3.01	0.52			
11/03/08	0.11	0.02	07/20/05	3.32	0.58	07/20/05	2.60	0.45	09/03/08	0.00	0.00	11/24/08	0.62	0.11	06/29/05	2.92	0.51			
11/05/08	0.18	0.03	07/22/05	3.4	0.59	07/22/05	2.65	0.46	09/11/08	0.00	0.00	11/26/08	0.55	0.10	07/01/05	2.90	0.50			
11/07/08	0.19	0.03	08/03/05	3	0.52	08/03/05	2.30	0.40	09/15/08	0.00	0.00	12/01/08	0.87	0.15	07/08/05	2.88	0.50			
11/12/08	0.09	0.02	08/05/05	3.16	0.55	08/05/05	2.46	0.43	10/07/08	1.03	0.18	01/05/09	1.13	0.20	07/15/05	2.90	0.50			
11/13/08	0.09	0.02	08/10/05	2.83	0.49	08/10/05	2.30	0.40	10/08/08	2.22	0.39	01/07/09	1.54	0.27	07/20/05	3.50	0.61			
11/14/08	0.17	0.03	08/12/05	3	0.52	08/12/05	2.05	0.36	10/13/08	5.14	0.89	01/12/09	1.46	0.25	07/22/05	3.41	0.59			
11/17/08	0.27	0.05	08/17/05	3.2	0.56	08/17/05	1.66	0.29	10/15/08	2.09	0.36	01/14/09	1.29	0.22	08/03/05	3.00	0.52			
11/26/08	0.07	0.01	08/18/05	3.15	0.55	08/18/05	1.90	0.33	10/17/08	1.17	0.20	01/16/09	1.44	0.25	08/05/05	3.04	0.53			
12/01/08	0.11	0.02	08/19/05	3.09	0.54	08/19/05	1.86	0.32	10/24/08	1.34	0.23	01/19/09	1.31	0.23	08/10/05	1.99	0.35			
01/05/09	0.12	0.02	08/24/05	2.04	0.35	08/24/05	2.00	0.35	10/31/08	0.16	0.03	01/29/09	2.96	0.52	08/12/05	2.07	0.36			
01/07/09	0.11	0.02	08/25/05	3.12	0.54	08/25/05	1.90	0.33	11/05/08	1.31	0.23	01/30/09	1.46	0.25	08/17/05	2.80	0.49			
01/12/09	0.16	0.03	08/26/05	3.12	0.54	08/26/05	1.87	0.33	11/07/08	2.02	0.35	02/06/09	1.63	0.28	08/18/05	2.70	0.47			
01/14/09	0	0.00	09/02/05	3.16	0.55	09/02/05	1.90	0.33	11/13/08	1.83	0.32	02/13/09	1.11	0.19	08/19/05	2.59	0.45			
01/16/09	0.16	0.03	09/08/05	3.3	0.57	09/08/05	2.67	0.46	11/14/08	2.02	0.35	02/17/09	1.33	0.23	08/24/05	3.30	0.57			
01/19/09	0	0.00	09/09/05	3.23	0.56	09/09/05	2.79	0.49	11/17/08	2.31	0.40	02/19/09	1.25	0.22	08/25/05	2.73	0.48			
01/29/09	0	0.00	09/14/05	3.49	0.61	09/14/05	2.87	0.50	11/24/08	0.66	0.11	02/20/09	1.00	0.17	08/26/05	2.78	0.48			
01/30/09	0	0.00	09/15/05	3.2	0.56	09/15/05	2.59	0.45	11/26/08	2.33	0.41	02/23/09	1.08	0.19	09/02/05	2.73	0.48			
02/05/09	0	0.00	09/23/05	3.25	0.57	09/23/05	2.41	0.42	12/01/08	2.27	0.39	02/25/09	0.68	0.12	09/08/05	2.65	0.46			
02/06/09	0	0.00	09/29/05	2.95	0.51	09/29/05	2.20	0.38	01/05/09	0.51	0.09	02/27/09	0.99	0.17	09/09/05	2.94	0.51			
02/13/09	0.02	0.00	10/03/05	2.95	0.51	10/03/05	1.10	0.19	01/14/09	0.00	0.00	03/03/09	1.11	0.19	09/14/05	2.90	0.50			
02/17/09	0.1	0.02	10/14/05	3.08	0.54	10/14/05	1.37	0.24	01/19/09	0.00	0.00	03/05/09	1.09	0.19	09/15/05	2.85	0.50			
02/20/09	0.14	0.02	10/21/05	2.86	0.50	10/21/05	1.97	0.34	02/13/09	0.32	0.06	03/06/09	1.13	0.20	09/23/05	2.73	0.48			
02/23/09	0.16	0.03	10/28/05	2.77	0.48	10/28/05	2.44	0.42	02/20/09	0.39	0.07	03/12/09	1.28	0.22	09/29/05	2.55	0.44			
02/25/09	0.09	0.02	11/01/05	2.42	0.42	11/01/05	2.50	0.44	02/27/09	0.41	0.07	03/13/09	1.36	0.24	10/03/05	2.70	0.47			
02/27/09	0.08	0.01	11/09/05	2.84	0.49	11/09/05	2.13	0.37	03/05/09	0.60	0.10	03/16/09	1.66	0.29	10/14/05	2.75	0.48			
03/03/09	0.12	0.02	11/16/05	2.81	0.49	11/16/05	2.14	0.37	03/13/09	0.87	0.15	03/23/09	1.58	0.27	10/21/05	2.82	0.49			
03/05/09	0.09	0.02	12/30/05	1.67	0.29	12/30/05	2.04	0.35	03/16/09	0.00	0.00	03/25/09	0.04	0.01	10/28/05	2.58	0.45			
03/06/09	0.06	0.01	01/06/06	1.67	0.29	01/06/06	2.04	0.35	03/23/09	1.15	0.20	03/27/09	0.25	0.04	11/01/05	2.60	0.45			
03/16/09	0.13	0.02	01/11/06	2.7	0.47	01/11/06	2.32	0.40	03/25/09	0.99	0.17	03/31/09	0.27	0.05	11/09/05	2.89	0.50			
03/23/09	1.07	0.19	01/18/06	2.4	0.42	01/18/06	2.05	0.36	03/31/09	0.32	0.06	04/01/09	1.06	0.18	11/16/05	2.63	0.46			
03/25/09	0.01	0.00	01/27/06	1.6	0.28	01/25/06	1.90	0.33	04/01/09	1.48	0.26	04/03/09	0.17	0.03	12/30/05	2.67	0.46			
03/27/09	0.01	0.00	01/31/06	0.7	0.12	01/27/06	2.01	0.35	04/03/09	0.18	0.03	04/06/09	0.18	0.03	01/06/06	2.67	0.46			
03/31/09	0.01	0.00	02/03/06	0.86	0.15	01/31/06	2.20	0.38	04/06/09	0.18	0.03	04/08/09	0.02	0.00	01/11/06	1.65	0.29			
04/01/09	0.01	0.00	02/08/06	0.95	0.17	02/03/06	2.10	0.37	04/08/09	0.27	0.05	04/10/09	0.11	0.02	01/25/06	2.35	0.41			
04/06/09	0	0.00	03/01/06	1.5	0.26	02/08/06	1.50	0.26	04/10/09	0.24	0.04	04/14/09	0.80	0.14	01/27/06	2.60	0.45			
04/08/09	0.01	0.00	03/03/06	1.85	0.32	02/24/06	1.60	0.28	04/14/09	0.40	0.07	04/16/09	0.11	0.02	01/31/06	1.92	0.33			
04/10/09	0.01	0.00	03/10/06	1.69	0.29	03/01/06	1.35	0.23	04/16/09	0.03	0.01	04/17/09	0.05	0.01	02/03/06	2.26	0.39			
04/14/09	0.01	0.00	03/15/06	1.14	0.20	03/03/06	1.55	0.27	04/17/09	0.02	0.00	04/20/09	0.87	0.15	02/08/06	1.10	0.19			
04/16/09	0.01	0.00	03/17/06	1.15	0.20	03/10/06	1.51	0.26	04/20/09	0.35	0.06	04/23/09	1.73	0.30	02/24/06	2.59	0.45			
04/17/09	0.01	0.00	03/20/06	1.25	0.22	03/15/06	1.38	0.24	04/23/09	0.56	0.10	04/24/09	0.06	0.01	03/01/06	0.90	0.16			
04/20/09	0.01	0.00	03/23/06	0.85	0.15	03/17/06	1.40	0.24	04/24/09	0.03	0.01	04/27/09	0.12	0.02	03/03/06	1.00	0.17			
04/23/09	0	0.00	03/24/06	0.84	0.15	03/20/06	1.20	0.21	04/27/09	0.26	0.05	04/29/09	0.10	0.02	03/10/06	0.97	0.17			

Table 1
Summary of LNAPL Observations (Pre-LMMP installed wells)
Warner-Lambert
Holland, Michigan

OW-3	OW-3	OW-3	OW-4	OW-4	OW-4	OW-11	OW-11	OW-11	OW-12D	OW-12D	OW-12D	OW-12S	OW-12S	OW-12S	OW-13	OW-13	OW-13	PZ-53	PZ-53	PZ-53
Date	Product (ft)	Product (gal)	**Date**	Product (ft)	Product (gal)	**Date**	Product (ft)	Product (gal)	**Date**	Product (ft)	Product (gal)	**Date**	Product (ft)	Product (gal)	**Date**	Product (ft)	Product (gal)	**Date**	Product (ft)	Product (gal)
04/24/09	0	0.00	03/29/06	1.08	0.19	03/23/06	1.25	0.22	04/29/09	0.01	0.00	05/04/09	0.37	0.06	03/15/06	1.66	0.29			
04/27/09	0	0.00	04/04/06	0.14	0.02	03/24/06	1.38	0.24	05/04/09	1.20	0.21	05/06/09	0.61	0.11	03/17/06	2.80	0.49			
04/29/09	0	0.00	04/05/06	0.1	0.02	03/29/06	1.05	0.18	05/06/09	0.31	0.05	05/14/09	0.04	0.01	03/20/06	2.70	0.47			
05/04/09	0	0.00	04/12/06	0.3	0.05	04/04/06	1.96	0.34	05/14/09	0.18	0.03	05/18/09	0.63	0.11	03/23/06	2.50	0.44			
05/06/09	0	0.00	04/18/06	0.13	0.02	04/05/06	1.90	0.33	05/18/09	0.54	0.09	05/20/09	0.08	0.01	03/24/06	2.44	0.42			
05/14/09	0.01	0.00	04/26/06	0.15	0.03	04/12/06	1.75	0.30	05/20/09	0.04	0.01	05/26/09	0.25	0.04	03/29/06	2.85	0.50			
05/18/09	0	0.00	05/03/06	0.14	0.02	04/18/06	1.70	0.30	05/26/09	0.42	0.07	05/28/09	0.54	0.09	04/04/06	1.11	0.19			
05/20/09	0.01	0.00	05/10/06	0.25	0.04	04/26/06	1.90	0.33	05/28/09	0.20	0.03	06/02/09	0.18	0.03	04/05/06	0.85	0.15			
05/26/09	0	0.00	05/17/06	0	0.00	05/03/06	2.24	0.39	06/02/09	0.03	0.01	06/08/09	0.35	0.06	04/12/06	0.75	0.13			
05/28/09	0	0.00	05/19/06	0.01	0.00	05/10/06	0.60	0.10	06/08/09	0.18	0.03	06/11/09	0.52	0.09	04/18/06	2.54	0.44			
06/02/09	0.01	0.00	05/23/06	0	0.00	05/16/06	1.54	0.27	06/11/09	0.21	0.04	06/15/09	0.35	0.06	04/26/06	2.56	0.45			
06/08/09	0	0.00	05/24/06	0.05	0.01	05/17/06	0.89	0.15	06/15/09	0.22	0.04	06/18/09	0.43	0.07	05/03/06	1.21	0.21			
06/11/09	0	0.00	05/26/06	0.02	0.00	05/19/06	1.08	0.19	06/18/09	0.16	0.03	06/22/09	0.36	0.06	05/10/06	1.95	0.34			
06/15/09	0	0.00	05/30/06	0.03	0.01	05/23/06	0.96	0.17	06/22/09	0.29	0.05	06/25/09	0.23	0.04	05/16/06	1.35	0.23			
06/18/09	0	0.00	05/31/06	0.01	0.00	05/24/06	1.18	0.21	06/25/09	0.28	0.05	06/29/09	0.22	0.04	05/17/06	1.25	0.22			
06/22/09	0	0.00	06/02/06	0.01	0.00	05/26/06	1.25	0.22	06/29/09	0.21	0.04	07/06/09	0.41	0.07	05/19/06	1.15	0.20			
06/25/09	0	0.00	06/05/06	0.04	0.01	05/30/06	1.11	0.19	07/06/09	0.31	0.05	07/09/09	0.33	0.06	05/23/06	2.33	0.41			
06/29/09	0	0.00	06/07/06	0	0.00	05/31/06	2.02	0.35	07/09/09	0.17	0.03	07/13/09	0.51	0.09	05/24/06	0.75	0.13			
07/06/09	0.01	0.00	06/09/06	0.02	0.00	06/02/06	0.50	0.09	07/13/09	0.20	0.03	07/16/09	0.31	0.05	05/26/06	1.00	0.17			
07/09/09	0	0.00	06/12/06	0.04	0.01	06/05/06	0.93	0.16	07/16/09	0.08	0.01	07/20/09	0.51	0.09	05/30/06	0.80	0.14			
07/13/09	0	0.00	06/14/06	0.11	0.02	06/07/06	1.18	0.21	07/20/09	0.12	0.02	07/23/09	0.42	0.07	05/31/06	1.07	0.19			
07/16/09	0	0.00	06/16/06	0.2	0.03	06/09/06	1.05	0.18	07/23/09	0.16	0.03	07/27/09	0.41	0.07	06/02/06	0.66	0.11			
07/20/09	0	0.00	06/19/06	0.56	0.10	06/12/06	0.80	0.14	07/27/09	0.15	0.03	07/30/09	0.19	0.03	06/05/06	0.95	0.17			
07/23/09	0	0.00	06/21/06	0.29	0.05	06/14/06	0.93	0.16	07/30/09	0.04	0.01	08/03/09	0.40	0.07	06/07/06	0.64	0.11			
07/27/09	0	0.00	06/23/06	0.01	0.00	06/16/06	1.61	0.28	08/03/09	0.25	0.04	08/06/09	0.32	0.06	06/09/06	0.64	0.11			
07/30/09	0	0.00	06/26/06	1.1	0.19	06/19/06	1.58	0.27	08/06/09	0.23	0.04	08/10/09	0.37	0.06	06/12/06	1.50	0.26			
08/03/09	0	0.00	06/28/06	0.56	0.10	06/21/06	1.71	0.30	08/10/09	0.12	0.02	08/13/09	0.45	0.08	06/14/06	0.59	0.10			
08/06/09	0	0.00	06/30/06	0.51	0.09	06/23/06	1.85	0.32	08/13/09	0.10	0.02	08/17/09	0.34	0.06	06/16/06	0.45	0.08			
08/10/09	0	0.00	07/03/06	0.94	0.16	06/26/06	2.10	0.37	08/17/09	0.15	0.03	08/20/09	0.21	0.04	06/19/06	1.07	0.19			
08/13/09	0	0.00	07/05/06	1	0.17	06/28/06	2.10	0.37	08/20/09	0.14	0.02	08/24/09	0.75	0.13	06/21/06	0.33	0.06			
08/17/09	0	0.00	07/07/06	0.7	0.12	06/30/06	2.15	0.37	08/24/09	0.20	0.03	08/27/09	0.62	0.11	06/23/06	0.01	0.00			
08/20/09	0	0.00	07/10/06	0.31	0.05	07/03/06	2.33	0.41	08/27/09	0.17	0.03	08/31/09	0.65	0.11	06/26/06	0.59	0.10			
08/24/09	0	0.00	07/12/06	1.59	0.28	07/05/06	2.32	0.40	08/31/09	0.24	0.04	09/03/09	0.43	0.07	06/28/06	0.44	0.08			
08/27/09	0	0.00	07/14/06	0.32	0.06	07/07/06	2.20	0.38	09/03/09	0.28	0.05	09/08/09	0.48	0.08	06/30/06	0.41	0.07			
08/31/09	0	0.00	07/17/06	1.18	0.21	07/10/06	2.32	0.40	09/08/09	0.24	0.04	09/10/09	0.43	0.07	07/03/06	0.67	0.12			
09/03/09	0	0.00	07/19/06	1.61	0.28	07/12/06	1.79	0.31	09/10/09	0.21	0.04	09/14/09	0.41	0.07	07/05/06	0.45	0.08			
09/08/09	0	0.00	07/21/06	0.27	0.05	07/14/06	2.25	0.39	09/14/09	0.38	0.07	09/17/09	0.18	0.03	07/07/06	0.60	0.10			
09/10/09	0	0.00	07/24/06	0.19	0.03	07/17/06	1.28	0.22	09/17/09	0.18	0.03	09/21/09	0.36	0.06	07/10/06	0.44	0.08			
09/14/09	0	0.00	07/26/06	1.1	0.19	07/19/06	1.60	0.28	09/21/09	0.32	0.06	09/24/09	0.39	0.07	07/12/06	1.12	0.19			
09/17/09	0	0.00	07/28/06	1.5	0.26	07/21/06	1.02	0.18	09/24/09	0.21	0.04	09/28/09	0.25	0.04	07/14/06	0.46	0.08			
09/21/09	0	0.00	07/29/06	0.61	0.11	07/24/06	0.20	0.03	09/28/09	0.10	0.02	10/01/09	0.27	0.05	07/17/06	1.28	0.22			
09/24/09	0	0.00	08/01/06	0.67	0.12	07/26/06	1.09	0.19	10/01/09	0.16	0.03	10/05/09	0.43	0.07	07/19/06	1.75	0.30			
09/28/09	0	0.00	08/04/06	0.72	0.13	07/28/06	1.39	0.24	10/05/09	0.14	0.02	10/08/09	0.28	0.05	07/21/06	0.60	0.10			
10/01/09	0	0.00	08/07/06	0.67	0.12	07/29/06	1.54	0.27	10/08/09	0.07	0.01	10/12/09	0.23	0.04	07/25/06	1.10	0.19			
10/05/09	0	0.00	08/09/06	0.74	0.13	08/01/06	0.58	0.10	10/12/09	0.19	0.03	12/14/09	0.98	0.17	07/26/06	1.70	0.30			
10/08/09	0	0.00	08/11/06	1.53	0.27	08/04/06	0.89	0.15	12/14/09	1.86	0.32	12/17/09	0.31	0.05	07/28/06	2.13	0.37			
10/12/09	0	0.00	08/14/06	1.24	0.22	08/07/06	0.89	0.15	12/17/09	0.42	0.07	12/21/09	0.27	0.05	07/29/06	0.40	0.07			

Table 1
Summary of LNAPL Observations (Pre-LMMP installed wells)
Warner-Lambert
Holland, Michigan

OW-3	OW-3	OW-3	OW-4	OW-4	OW-4	OW-11	OW-11	OW-11	OW-12D	OW-12D	OW-12D	OW-12S	OW-12S	OW-12S	OW-13	OW-13	OW-13	PZ-53	PZ-53	PZ-53
Date	Product (ft)	Product (gal)	**Date**	Product (ft)	Product (gal)	**Date**	Product (ft)	Product (gal)	**Date**	Product (ft)	Product (gal)	**Date**	Product (ft)	Product (gal)	**Date**	Product (ft)	Product (gal)	**Date**	Product (ft)	Product (gal)
12/14/09	0.03	0.01	08/16/06	0.65	0.11	08/09/06	1.22	0.21	12/21/09	0.28	0.05	12/28/09	0.31	0.05	08/01/06	1.52	0.26			
12/17/09	0.03	0.01	08/18/06	1.09	0.19	08/11/06	1.71	0.30	12/28/09	0.12	0.02	12/30/09	0.03	0.01	08/04/06	0.79	0.14			
12/21/09	0.03	0.01	08/21/06	1.54	0.27	08/14/06	3.10	0.54	12/30/09	0.02	0.00	12/31/09	0.04	0.01	08/07/06	1.62	0.28			
12/28/09	0.04	0.01	08/23/06	2.02	0.35	08/16/06	1.88	0.33	12/31/09	0.05	0.01	01/04/10	0.06	0.01	08/09/06	2.06	0.36			
12/30/09	0.01	0.00	08/25/06	2.58	0.45	08/18/06	2.15	0.37	01/04/10	0.12	0.02	01/11/10	0.10	0.02	08/11/06	1.89	0.33			
12/31/09	0.02	0.00	08/28/06	0.41	0.07	08/21/06	2.30	0.40	01/11/10	0.13	0.02	01/18/10	0.29	0.05	08/14/06	1.19	0.21			
01/04/10	0.03	0.01	09/01/06	0.91	0.16	08/23/06	2.55	0.44	01/18/10	0.30	0.05	01/25/10	0.11	0.02	08/16/06	1.83	0.32			
01/11/10	0.04	0.01	09/04/06	1.09	0.19	08/25/06	1.85	0.32	01/25/10	0.11	0.02	02/01/10	0.18	0.03	08/18/06	0.87	0.15			
01/18/10	0.03	0.01	09/06/06	0.74	0.13	08/28/06	1.60	0.28	02/01/10	0.17	0.03	02/08/10	0.25	0.04	08/21/06	1.13	0.20			
01/25/10	0	0.00	09/08/06	0.98	0.17	09/01/06	1.34	0.23	02/08/10	0.32	0.06	02/15/10	0.20	0.03	08/23/06	1.75	0.30			
02/01/10	0.05	0.01	09/11/06	0.78	0.14	09/04/06	1.01	0.18	02/15/10	0.10	0.02	02/22/10	0.22	0.04	08/25/06	1.94	0.34			
02/08/10	0.08	0.01	09/13/06	0.87	0.15	09/06/06	1.04	0.18	02/22/10	0.16	0.03	03/01/10	0.41	0.07	08/28/06	1.31	0.23			
02/15/10	0.06	0.01	09/15/06	1.11	0.19	09/08/06	1.88	0.33	03/01/10	0.15	0.03	03/08/10	0.38	0.07	09/01/06	0.81	0.14			
02/22/10	0.08	0.01	09/18/06	0.22	0.04	09/11/06	1.67	0.29	03/08/10	0.15	0.03	03/15/10	0.15	0.03	09/04/06	1.25	0.22			
03/01/10	0.05	0.01	09/20/06	0.26	0.05	09/13/06	1.61	0.28	03/15/10	0.10	0.02	03/22/10	0.12	0.02	09/06/06	1.29	0.22			
03/08/10	0.08	0.01	09/22/06	0.25	0.04	09/15/06	1.62	0.28	03/22/10	0.12	0.02	03/29/10	0.15	0.03	09/08/06	0.90	0.16			
03/15/10	0.07	0.01	09/25/06	0.04	0.01	09/18/06	1.51	0.26	03/29/10	0.11	0.02	04/05/10	0.17	0.03	09/11/06	1.02	0.18			
03/22/10	0.25	0.04	09/27/06	0.19	0.03	09/20/06	1.17	0.20	04/05/10	0.08	0.01	04/12/10	0.18	0.03	09/13/06	1.10	0.19			
03/29/10	0.05	0.01	09/29/06	0.12	0.02	09/22/06	0.82	0.14	04/12/10	0.12	0.02	04/19/10	0.20	0.03	09/15/06	1.00	0.17			
04/05/10	0.04	0.01	10/02/06	0.25	0.04	09/25/06	0.47	0.08	04/19/10	0.24	0.04	04/26/10	0.15	0.03	09/18/06	1.67	0.29			
04/12/10	0.04	0.01	10/04/06	0.27	0.05	09/27/06	0.60	0.10	04/26/10	0.12	0.02	05/03/10	0.20	0.03	09/20/06	1.70	0.30			
04/19/10	0.03	0.01	10/06/06	0	0.00	09/29/06	0.70	0.12	05/03/10	0.19	0.03	05/10/10	0.25	0.04	09/22/06	1.62	0.28			
04/26/10	0.04	0.01	10/09/06	0	0.00	10/02/06	0.79	0.14	05/10/10	0.07	0.01	05/17/10	0.46	0.08	09/25/06	1.63	0.28			
05/03/10	0.04	0.01	10/11/06	0	0.00	10/04/06	1.07	0.19	05/17/10	0.08	0.01	05/26/10	0.12	0.02	09/27/06	1.52	0.26			
05/10/10	0.03	0.01	10/13/06	0.1	0.02	10/06/06	0.50	0.09	06/22/10	0.67	0.12	06/08/10	0.72	0.13	09/29/06	1.35	0.23			
05/17/10	0	0.00	10/16/06	0.05	0.01	10/09/06	1.75	0.30	06/29/10	0.03	0.01	06/22/10	0.85	0.15	10/02/06	1.20	0.21			
05/26/10	0.1	0.02	10/18/06	0.44	0.08	10/11/06	1.63	0.28	07/13/10	0.14	0.02	06/29/10	0.35	0.06	10/04/06	1.60	0.28			
06/08/10	0.02	0.00	10/20/06	0.06	0.01	10/13/06	2.27	0.39	07/20/10	0.06	0.01	07/13/10	0.57	0.10	10/06/06	1.71	0.30			
06/22/10	0.05	0.01	10/23/06	0.25	0.04	10/16/06	1.66	0.29	07/27/10	0.18	0.03	07/20/10	0.61	0.11	10/09/06	2.40	0.42			
06/29/10	0.05	0.01	10/25/06	0.21	0.04	10/18/06	1.54	0.27	08/03/10	0.07	0.01	07/27/10	0.46	0.08	10/11/06	2.23	0.39			
07/13/10	0.1	0.02	10/27/06	0.37	0.06	10/20/06	1.12	0.19	08/10/10	0.36	0.06	08/03/10	0.12	0.02	10/13/06	2.11	0.37			
07/20/10	0.04	0.01	10/30/06	0.22	0.04	10/23/06	1.31	0.23	08/17/10	0.16	0.03	08/10/10	0.40	0.07	10/16/06	1.53	0.27			
07/27/10	0	0.00	11/01/06	0.25	0.04	10/25/06	0.97	0.17	08/24/10	0.15	0.03	08/17/10	0.32	0.06	10/18/06	1.89	0.33			
08/03/10	0.03	0.01	11/03/06	0.09	0.02	10/27/06	0.76	0.13	08/31/10	0.31	0.05	08/24/10	0.50	0.09	10/20/06	1.56	0.27			
08/10/10	0.03	0.01	11/06/06	0.9	0.16	10/30/06	0.74	0.13	09/07/10	0.25	0.04	08/31/10	0.42	0.07	10/23/06	2.56	0.45			
08/17/10	0	0.00	11/08/06	0.04	0.01	11/01/06	1.37	0.24	09/14/10	0.11	0.02	09/07/10	0.58	0.10	10/25/06	2.30	0.40			
08/24/10	0	0.00	11/10/06	0.05	0.01	11/03/06	1.54	0.27	09/21/10	0.11	0.02	09/14/10	0.40	0.07	10/27/06	2.50	0.44			
08/31/10	0	0.00	11/13/06	0.1	0.02	11/06/06	1.56	0.27	09/28/10	0.07	0.01	09/21/10	0.33	0.06	10/30/06	2.38	0.41			
09/07/10	0	0.00	11/15/06	1.24	0.22	11/08/06	1.64	0.29	10/05/10	0.05	0.01	09/28/10	0.28	0.05	11/01/06	1.20	0.21			
09/14/10	0	0.00	11/17/06	1.25	0.22	11/10/06	1.74	0.30	10/11/10	0.03	0.01	10/05/10	0.23	0.04	11/03/06	1.50	0.26			
09/21/10	0	0.00	11/20/06	0.45	0.08	11/13/06	1.78	0.31	10/19/10	0.04	0.01	10/11/10	0.15	0.03	11/06/06	2.26	0.39			
09/28/10	0	0.00	11/22/06	0.04	0.01	11/15/06	1.27	0.22	10/27/10	0.08	0.01	10/19/10	0.11	0.02	11/08/06	1.86	0.32			
10/05/10	0	0.00	11/25/06	0.09	0.02	11/17/06	1.15	0.20	11/03/10	0.01	0.00	10/27/10	0.12	0.02	11/10/06	1.59	0.28			
10/11/10	0	0.00	11/27/06	1.68	0.29	11/20/06	1.26	0.22	11/09/10	0.02	0.00	11/03/10	0.15	0.03	11/13/06	1.49	0.26			
10/19/10	0	0.00	11/29/06	0.66	0.11	11/22/06	1.60	0.28	11/16/10	0.01	0.00	11/09/10	0.13	0.02	11/15/06	2.38	0.41			
10/27/10	0	0.00	12/01/06	0.4	0.07	11/25/06	1.64	0.29	11/23/10	0.02	0.00	11/16/10	0.13	0.02	11/17/06	0.75	0.13			
11/03/10	0.02	0.00	12/04/06	0.1	0.02	11/27/06	2.01	0.35	11/30/10	0.02	0.00	11/23/10	0.03	0.01	11/20/06	1.32	0.23			

Table 1
Summary of LNAPL Observations (Pre-LMMP installed wells)
Warner-Lambert
Holland, Michigan

OW-3	OW-3	OW-3	OW-4	OW-4	OW-4	OW-11	OW-11	OW-11	OW-12D	OW-12D	OW-12D	OW-12S	OW-12S	OW-12S	OW-13	OW-13	OW-13	PZ-53	PZ-53	PZ-53
Date	Product (ft)	Product (gal)	**Date**	Product (ft)	Product (gal)	**Date**	Product (ft)	Product (gal)	**Date**	Product (ft)	Product (gal)	**Date**	Product (ft)	Product (gal)	**Date**	Product (ft)	Product (gal)	**Date**	Product (ft)	Product (gal)
11/09/10	0	0.00	12/06/06	1.15	0.20	11/29/06	1.77	0.31	12/07/10	0.08	0.01	11/30/10	0.10	0.02	11/22/06	1.14	0.20			
11/16/10	0	0.00	12/11/06	1.12	0.19	12/01/06	2.02	0.35	12/14/10	0.05	0.01	12/07/10	0.14	0.02	11/25/06	1.45	0.25			
11/23/10	0	0.00	12/12/06	0.65	0.11	12/04/06	2.05	0.36	12/29/10	0.42	0.07	12/14/10	0.59	0.10	11/27/06	2.12	0.37			
11/30/10	0	0.00	12/15/06	0.72	0.13	12/06/06	1.11	0.19	01/04/11	0.51	0.09	12/29/10	0.25	0.04	11/29/06	2.08	0.36			
12/07/10	0	0.00	12/20/06	0.97	0.17	12/11/06	1.50	0.26	01/11/11	0.70	0.12	01/04/11	0.27	0.05	12/01/06	2.07	0.36			
12/14/10	0.01	0.00	12/21/06	0.5	0.09	12/12/06	1.42	0.25	01/18/11	0.51	0.09	01/11/11	0.25	0.04	12/04/06	2.18	0.38			
12/22/10	0.19	0.03	12/27/06	0.73	0.13	12/15/06	1.54	0.27	01/25/11	0.38	0.07	01/18/11	0.35	0.06	12/06/06	1.73	0.30			
12/29/10	0	0.00	12/28/06	0.1	0.02	12/20/06	1.40	0.24	02/01/11	0.41	0.07	01/25/11	0.15	0.03	12/11/06	2.94	0.51			
01/04/11	0	0.00	12/29/06	0.2	0.03	12/21/06	1.05	0.18	02/07/11	0.16	0.03	02/01/11	0.47	0.08	12/12/06	1.36	0.24			
01/11/11	0	0.00	01/02/07	0.8	0.14	12/27/06	1.30	0.23	02/15/11	0.66	0.11	02/07/11	0.28	0.05	12/15/06	1.86	0.32			
01/18/11	0.01	0.00	01/04/07	0.4	0.07	12/28/06	0.90	0.16	02/22/11	0.28	0.05	02/15/11	0.36	0.06	12/20/06	2.20	0.38			
01/25/11	0.05	0.01	01/05/07	0.15	0.03	12/29/06	1.15	0.20	03/01/11	0.15	0.03	02/22/11	0.25	0.04	12/21/06	1.45	0.25			
02/01/11	0	0.00	01/09/07	0.09	0.02	01/02/07	1.50	0.26	03/08/11	0.16	0.03	03/01/11	0.14	0.02	12/22/06	0.70	0.12			
02/07/11	0	0.00	01/11/07	0.67	0.12	01/04/07	1.05	0.18	03/15/11	0.24	0.04	03/08/11	0.03	0.01	12/27/06	1.55	0.27			
02/15/11	0	0.00	01/13/07	0.39	0.07	01/05/07	1.15	0.20	03/22/11	0.18	0.03	03/15/11	0.14	0.02	12/28/06	0.55	0.10			
02/22/11	0	0.00	01/15/07	0.05	0.01	01/09/07	1.14	0.20	03/28/11	0.16	0.03	03/22/11	0.07	0.01	12/29/06	0.70	0.12			
03/01/11	0	0.00	01/17/07	0.99	0.17	01/11/07	1.32	0.23	04/05/11	0.11	0.02	03/28/11	0.10	0.02	01/02/07	1.35	0.23			
03/08/11	0	0.00	01/20/07	0.22	0.04	01/13/07	1.55	0.27	04/12/11	0.10	0.02	04/05/11	0.02	0.00	01/04/07	0.75	0.13			
03/15/11	0	0.00	01/23/07	0.44	0.08	01/15/07	0.92	0.16	04/19/11	0.07	0.01	04/12/11	0.01	0.00	01/05/07	0.85	0.15			
03/22/11	0	0.00	01/25/07	1.11	0.19	01/17/07	1.40	0.24	04/29/11	0.07	0.01	04/19/11	0.01	0.00	01/09/07	0.66	0.11			
03/28/11	0	0.00	01/27/07	0.22	0.04	01/20/07	1.21	0.21	05/03/11	0.19	0.03	04/29/11	0.00	0.00	01/11/07	1.56	0.27			
04/05/11	0	0.00	01/30/07	1.08	0.19	01/23/07	1.56	0.27	05/10/11	0.23	0.04	05/03/11	0.05	0.01	01/13/07	1.58	0.27			
04/12/11	0	0.00	02/01/07	0.7	0.12	01/25/07	1.03	0.18	05/17/11	0.10	0.02	05/10/11	0.04	0.01	01/15/07	1.51	0.26			
04/19/11	0	0.00	02/03/07	0.49	0.09	01/27/07	2.51	0.44	05/24/11	0.20	0.03	05/17/11	0.02	0.00	01/20/07	1.67	0.29			
04/29/11	0	0.00	02/06/07	0.4	0.07	01/30/07	1.50	0.26	06/01/11	0.35	0.06	05/24/11	0.07	0.01	01/23/07	1.82	0.32			
05/03/11	0.01	0.00	02/08/07	1.11	0.19	02/01/07	1.44	0.25	06/08/11	0.22	0.04	06/01/11	0.12	0.02	01/25/07	1.62	0.28			
05/10/11	0.09	0.02	02/10/07	0.3	0.05	02/03/07	1.14	0.20	06/14/11	0.54	0.09	06/08/11	0.12	0.02	01/27/07	1.67	0.29			
05/17/11	0.14	0.02	02/13/07	0.3	0.05	02/06/07	1.45	0.25	06/21/11	0.10	0.02	06/14/11	0.40	0.07	01/30/07	2.15	0.37			
05/24/11	0.08	0.01	02/15/07	0.2	0.03	02/08/07	1.21	0.21	06/28/11	0.40	0.07	06/21/11	1.05	0.18	02/01/07	1.15	0.20			
06/01/11	0.08	0.01	02/17/07	0.2	0.03	02/10/07	1.79	0.31	07/06/11	0.57	0.10	06/28/11	1.00	0.17	02/03/07	1.48	0.26			
06/08/11	0.03	0.01	02/19/07	0.37	0.06	02/13/07	1.10	0.19	07/12/11	0.98	0.17	07/06/11	0.80	0.14	02/06/07	2.20	0.38			
06/14/11	0.02	0.00	02/21/07	1.12	0.19	02/15/07	1.72	0.30	07/20/11	0.55	0.10	07/12/11	1.17	0.20	02/08/07	1.55	0.27			
06/21/11	0.04	0.01	02/24/07	0.25	0.04	02/17/07	1.28	0.22	07/27/11	1.21	0.21	07/20/11	0.18	0.03	02/10/07	1.75	0.30			
06/28/11	0	0.00	02/27/07	0.6	0.10	02/19/07	1.20	0.21	08/02/11	0.37	0.06	07/27/11	0.45	0.08	02/13/07	1.61	0.28			
07/06/11	0.02	0.00	03/03/07	0.25	0.04	02/21/07	1.50	0.26	08/10/11	0.55	0.10	08/02/11	0.83	0.14	02/15/07	1.35	0.23			
07/12/11	0.18	0.03	03/05/07	1	0.17	02/24/07	1.67	0.29	08/17/11	0.25	0.04	08/10/11	0.39	0.07	02/17/07	1.35	0.23			
08/02/11	0.02	0.00	03/07/07	0.95	0.17	02/27/07	1.78	0.31	08/24/11	0.33	0.06	12/07/11	0.58	0.10	02/19/07	1.35	0.23			
08/24/11	0	0.00	03/09/07	0.65	0.11	03/03/07	1.16	0.20	08/30/11	0.38	0.07	12/15/11	0.20	0.03	02/21/07	1.94	0.34			
08/30/11	0.03	0.01	03/12/07	0.44	0.08	03/05/07	1.84	0.32	09/07/11	0.27	0.05	12/27/11	0.45	0.08	02/24/07	1.18	0.21			
			03/14/07	0.55	0.10	03/07/07	1.45	0.25	09/13/11	0.40	0.07	01/11/12	0.32	0.06	02/27/07	1.69	0.29			
			03/16/07	0.89	0.15	03/09/07	1.48	0.26	09/21/11	0.20	0.03	01/24/12	0.29	0.05	03/03/07	1.52	0.26			
			03/19/07	1.6	0.28	03/12/07	1.60	0.28	09/29/11	0.04	0.01	02/07/12	0.55	0.10	03/05/07	1.55	0.27			
			03/24/07	1	0.17	03/14/07	1.34	0.23	10/04/11	0.13	0.02	02/21/12	0.12	0.02	03/07/07	1.35	0.23			
			03/26/07	0.8	0.14	03/16/07	1.14	0.20	10/11/11	0.42	0.07	03/06/12	0.54	0.09	03/09/07	1.34	0.23			
			03/28/07	0.55	0.10	03/19/07	1.14	0.20	10/18/11	0.40	0.07	03/14/12	0.46	0.08	03/12/07	1.82	0.32			
			03/30/07	0.45	0.08	03/24/07	1.32	0.23	10/25/11	0.20	0.03	04/04/12	0.29	0.05	03/14/07	1.49	0.26			
			04/02/07	0.35	0.06	03/26/07	1.10	0.19	10/31/11	0.30	0.05	04/11/12	0.86	0.15	03/16/07	1.54	0.27			

Table 1
Summary of LNAPL Observations (Pre-LMMP installed wells)
Warner-Lambert
Holland, Michigan

OW-3	OW-3	OW-3	OW-4	OW-4	OW-4	OW-11	OW-11	OW-11	OW-12D	OW-12D	OW-12D	OW-12S	OW-12S	OW-12S	OW-13	OW-13	OW-13	PZ-53	PZ-53	PZ-53
Date	Product (ft)	Product (gal)	**Date**	Product (ft)	Product (gal)	**Date**	Product (ft)	Product (gal)	**Date**	Product (ft)	Product (gal)	**Date**	Product (ft)	Product (gal)	**Date**	Product (ft)	Product (gal)	**Date**	Product (ft)	Product (gal)
			04/06/07	0.25	0.04	03/28/07	1.09	0.19	11/18/11	0.58	0.10	04/18/12	0.37	0.06	03/19/07	2.30	0.40			
			04/09/07	0.75	0.13	03/30/07	1.00	0.17	11/28/11	1.15	0.20	04/25/12	0.48	0.08	03/24/07	2.05	0.36			
			04/11/07	1	0.17	04/02/07	0.95	0.17	12/07/11	0.37	0.06	05/02/12	0.00	0.00	03/26/07	1.90	0.33			
			04/13/07	0.85	0.15	04/06/07	0.90	0.16	12/15/11	0.20	0.03	05/08/12	0.03	0.01	03/28/07	1.20	0.21			
			04/16/07	0.7	0.12	04/09/07	1.25	0.22	12/27/11	0.30	0.05	05/16/12	0.30	0.05	03/30/07	1.25	0.22			
			04/18/07	0.45	0.08	04/11/07	1.30	0.23	01/11/12	0.28	0.05	05/23/12	0.42	0.07	04/02/07	1.20	0.21			
			04/20/07	0.5	0.09	04/13/07	0.76	0.13	01/24/12	0.61	0.11	05/29/12	0.08	0.01	04/06/07	1.95	0.34			
			04/23/07	0.55	0.10	04/16/07	0.90	0.16	02/07/12	0.80	0.14	06/06/12	0.04	0.01	04/09/07	1.80	0.31			
			04/25/07	0.4	0.07	04/18/07	0.87	0.15	02/21/12	0.72	0.13	10/18/12	0.00	0.00	04/11/07	1.80	0.31			
			04/27/07	0.72	0.13	04/20/07	1.30	0.23	03/06/12	0.35	0.06				04/13/07	2.00	0.35			
			04/30/07	0.7	0.12	04/23/07	1.68	0.29	03/14/12	0.49	0.09				04/16/07	2.65	0.46			
			05/03/07	0.41	0.07	04/25/07	0.90	0.16	04/04/12	0.36	0.06				04/18/07	1.49	0.26			
			05/05/07	0.5	0.09	04/27/07	1.25	0.22	04/11/12	0.51	0.09				04/20/07	1.89	0.33			
			05/07/07	0.5	0.09	04/30/07	1.39	0.24	04/18/12	0.16	0.03				04/23/07	2.00	0.35			
			05/10/07	0.95	0.17	05/03/07	0.85	0.15	04/25/12	0.14	0.02				04/25/07	1.55	0.27			
			05/11/07	0.5	0.09	05/05/07	1.38	0.24	05/02/12	0.15	0.03				04/27/07	1.91	0.33			
			05/15/07	0.06	0.01	05/07/07	1.41	0.25	05/08/12	0.13	0.02				04/30/07	2.21	0.38			
			05/17/07	0.1	0.02	05/10/07	1.66	0.29	05/16/12	0.15	0.03				05/03/07	1.70	0.30			
			05/18/07	0.1	0.02	05/11/07	1.39	0.24	05/23/12	0.62	0.11				05/05/07	2.75	0.48			
			05/30/07	0.66	0.11	05/15/07	0.75	0.13	05/29/12	0.37	0.06				05/07/07	2.25	0.39			
			05/31/07	0.67	0.12	05/17/07	0.82	0.14	06/01/12	0.04	0.01				05/10/07	2.65	0.46			
			06/01/07	0.66	0.11	05/18/07	1.00	0.17	06/06/12	0.02	0.00				05/11/07	1.65	0.29			
			06/04/07	0.45	0.08	05/30/07	1.02	0.18	06/13/12	0.17	0.03				05/15/07	0.85	0.15			
			06/07/07	0.8	0.14	05/31/07	1.01	0.18	06/20/12	0.04	0.01				05/17/07	0.20	0.03			
			06/08/07	0.65	0.11	06/01/07	0.93	0.16	09/14/12	0.21	0.04				05/18/07	0.32	0.06			
			06/11/07	0.81	0.14	06/04/07	1.50	0.26	10/12/12	0.20	0.03				05/30/07	2.70	0.47			
			06/13/07	0.9	0.16	06/07/07	1.23	0.21	10/18/12	0.92	0.16				05/31/07	1.14	0.20			
			06/15/07	0.44	0.08	06/08/07	1.25	0.22							06/01/07	1.05	0.18			
			06/18/07	1	0.17	06/11/07	0.96	0.17							06/04/07	0.40	0.07			
			06/20/07	1.23	0.21	06/13/07	1.23	0.21							06/07/07	0.83	0.14			
			06/22/07	0.49	0.09	06/15/07	0.22	0.04							06/08/07	1.00	0.17			
			06/25/07	0.96	0.17	06/18/07	2.25	0.39							06/11/07	0.70	0.12			
			06/27/07	0.55	0.10	06/20/07	1.43	0.25							06/13/07	1.08	0.19			
			06/29/07	0.3	0.05	06/22/07	1.46	0.25							06/15/07	0.42	0.07			
			07/03/07	1.6	0.28	06/25/07	1.60	0.28							06/18/07	1.05	0.18			
			07/05/07	1.7	0.30	06/27/07	1.27	0.22							06/20/07	1.35	0.23			
			07/06/07	0.4	0.07	06/29/07	1.72	0.30							06/22/07	1.25	0.22			
			07/11/07	1.62	0.28	07/03/07	1.66	0.29							06/25/07	1.15	0.20			
			07/12/07	1.78	0.31	07/05/07	2.09	0.36							06/27/07	1.05	0.18			
			07/13/07	0.35	0.06	07/06/07	1.70	0.30							06/29/07	1.05	0.18			
			07/17/07	1.4	0.24	07/11/07	2.27	0.39							07/03/07	2.05	0.36			
			07/19/07	1.97	0.34	07/12/07	2.37	0.41							07/05/07	2.05	0.36			
			07/20/07	0.96	0.17	07/13/07	1.15	0.20							07/06/07	0.25	0.04			
			07/24/07	1.54	0.27	07/17/07	2.41	0.42							07/11/07	3.85	0.67			
			07/26/07	1.97	0.34	07/19/07	1.55	0.27							07/12/07	1.77	0.31			
			07/27/07	1.15	0.20	07/20/07	1.87	0.33							07/13/07	0.40	0.07			
			08/01/07	1.25	0.22	07/24/07	2.45	0.43							07/17/07	1.40	0.24			

Table 1
Summary of LNAPL Observations (Pre-LMMP installed wells)
Warner-Lambert
Holland, Michigan

OW-3	OW-3	OW-3	OW-4	OW-4	OW-4	OW-11	OW-11	OW-11	OW-12D	OW-12D	OW-12D	OW-12S	OW-12S	OW-12S	OW-13	OW-13	OW-13	PZ-53	PZ-53	PZ-53
Date	Product (ft)	Product (gal)	**Date**	Product (ft)	Product (gal)	**Date**	Product (ft)	Product (gal)	**Date**	Product (ft)	Product (gal)	**Date**	Product (ft)	Product (gal)	**Date**	Product (ft)	Product (gal)	**Date**	Product (ft)	Product (gal)
			08/02/07	2.1	0.37	07/26/07	2.47	0.43							07/19/07	1.79	0.31			
			08/03/07	0.6	0.10	07/27/07	2.33	0.41							07/20/07	1.65	0.29			
			08/06/07	1.42	0.25	08/01/07	2.38	0.41							07/24/07	1.34	0.23			
			08/08/07	1.05	0.18	08/02/07	2.06	0.36							07/26/07	1.73	0.30			
			08/10/07	1.17	0.20	08/03/07	1.90	0.33							07/27/07	1.66	0.29			
			08/14/07	0.95	0.17	08/06/07	2.09	0.36							08/01/07	1.75	0.30			
			08/15/07	0.87	0.15	08/08/07	1.85	0.32							08/02/07	1.80	0.31			
			08/16/07	0.95	0.17	08/10/07	1.38	0.24							08/03/07	0.35	0.06			
			08/22/07	1.9	0.33	08/14/07	1.47	0.26							08/06/07	1.08	0.19			
			08/24/07	1.9	0.33	08/15/07	1.80	0.31							08/08/07	0.57	0.10			
			08/28/07	0.15	0.03	08/16/07	1.61	0.28							08/10/07	1.05	0.18			
			08/29/07	0.2	0.03	08/22/07	1.35	0.23							08/14/07	1.72	0.30			
			08/31/07	0.2	0.03	08/24/07	1.20	0.21							08/15/07	0.94	0.16			
			09/04/07	0.61	0.11	08/28/07	0.65	0.11							08/16/07	0.78	0.14			
			09/05/07	0.85	0.15	08/29/07	1.00	0.17							08/22/07	1.19	0.21			
			09/07/07	0.62	0.11	08/31/07	1.28	0.22							08/24/07	2.67	0.46			
			09/10/07	1.14	0.20	09/04/07	1.75	0.30							08/28/07	1.70	0.30			
			09/12/07	0.82	0.14	09/05/07	2.40	0.42							08/29/07	1.95	0.34			
			09/14/07	0.86	0.15	09/07/07	1.57	0.27							08/31/07	2.31	0.40			
			09/18/07	1.66	0.29	09/10/07	1.36	0.24							09/04/07	2.90	0.50			
			09/19/07	0.5	0.09	09/12/07	1.63	0.28							09/05/07	3.00	0.52			
			09/21/07	1.05	0.18	09/14/07	1.80	0.31							09/07/07	1.08	0.19			
			09/25/07	1.27	0.22	09/18/07	2.07	0.36							09/10/07	1.78	0.31			
			09/28/07	1.7	0.30	09/19/07	1.85	0.32							09/12/07	1.01	0.18			
			09/29/07	0.45	0.08	09/21/07	1.61	0.28							09/14/07	1.43	0.25			
			10/02/07	1.78	0.31	09/25/07	1.65	0.29							09/18/07	2.31	0.40			
			10/04/07	0.52	0.09	09/28/07	0.53	0.09							09/19/07	0.75	0.13			
			10/05/07	0.23	0.04	09/29/07	1.10	0.19							09/21/07	1.12	0.19			
			10/08/07	0.93	0.16	10/02/07	1.37	0.24							09/25/07	1.60	0.28			
			10/10/07	1.18	0.21	10/04/07	1.52	0.26							09/28/07	1.95	0.34			
			10/12/07	0.31	0.05	10/05/07	1.18	0.21							09/29/07	0.70	0.12			
			10/15/07	0.55	0.10	10/08/07	1.48	0.26							10/02/07	2.14	0.37			
			10/17/07	0.76	0.13	10/10/07	2.64	0.46							10/04/07	1.05	0.18			
			10/19/07	0.55	0.10	10/12/07	1.28	0.22							10/05/07	0.58	0.10			
			10/22/07	0.6	0.10	10/15/07	0.90	0.16							10/08/07	1.34	0.23			
			10/25/07	0.61	0.11	10/17/07	1.28	0.22							10/10/07	1.79	0.31			
			10/26/07	0.04	0.01	10/19/07	0.74	0.13							10/12/07	1.09	0.19			
			10/29/07	0.14	0.02	10/22/07	1.04	0.18							10/15/07	1.21	0.21			
			10/31/07	0.27	0.05	10/25/07	1.11	0.19							10/17/07	0.77	0.13			
			11/02/07	0.41	0.07	10/26/07	0.65	0.11							10/19/07	1.95	0.34			
			11/05/07	1.07	0.19	10/29/07	1.13	0.20							10/22/07	1.41	0.25			
			11/07/07	0.45	0.08	10/31/07	1.59	0.28							10/25/07	1.54	0.27			
			11/09/07	0.75	0.13	11/02/07	1.92	0.33							10/26/07	0.65	0.11			
			11/12/07	0.97	0.17	11/05/07	2.49	0.43							10/29/07	1.90	0.33			
			11/14/07	0.54	0.09	11/07/07	1.59	0.28							10/31/07	1.17	0.20			
			11/16/07	0.45	0.08	11/09/07	1.32	0.23							11/02/07	1.06	0.18			
			11/19/07	0.84	0.15	11/12/07	1.64	0.29							11/05/07	1.77	0.31			

Table 1
Summary of LNAPL Observations (Pre-LMMP installed wells)
Warner-Lambert
Holland, Michigan

OW-3	OW-3	OW-3	OW-4	OW-4	OW-4	OW-11	OW-11	OW-11	OW-12D	OW-12D	OW-12D	OW-12S	OW-12S	OW-12S	OW-13	OW-13	OW-13	PZ-53	PZ-53	PZ-53
Date	Product (ft)	Product (gal)	**Date**	Product (ft)	Product (gal)	**Date**	Product (ft)	Product (gal)	**Date**	Product (ft)	Product (gal)	**Date**	Product (ft)	Product (gal)	**Date**	Product (ft)	Product (gal)	**Date**	Product (ft)	Product (gal)
			11/21/07	1.11	0.19	11/14/07	2.65	0.46							11/07/07	0.86	0.15			
			11/26/07	1.06	0.18	11/16/07	1.76	0.31							11/09/07	1.02	0.18			
			11/28/07	0.52	0.09	11/19/07	1.51	0.26							11/12/07	1.53	0.27			
			11/30/07	0.51	0.09	11/21/07	1.66	0.29							11/14/07	0.97	0.17			
			12/03/07	1.08	0.19	11/26/07	1.28	0.22							11/16/07	0.80	0.14			
			12/05/07	1.1	0.19	11/28/07	1.59	0.28							11/19/07	1.41	0.25			
			12/07/07	0.42	0.07	11/30/07	1.91	0.33							11/21/07	0.80	0.14			
			12/12/07	1.29	0.22	12/03/07	1.04	0.18							11/26/07	1.70	0.30			
			12/14/07	1.33	0.23	12/05/07	0.95	0.17							11/28/07	0.82	0.14			
			12/17/07	1.45	0.25	12/07/07	1.32	0.23							11/30/07	1.27	0.22			
			12/20/07	1.33	0.23	12/11/07	1.90	0.33							12/03/07	1.51	0.26			
			12/21/07	1.35	0.23	12/12/07	2.24	0.39							12/05/07	0.93	0.16			
			12/26/07	1.38	0.24	12/14/07	2.29	0.40							12/07/07	1.38	0.24			
			12/27/07	1.26	0.22	12/17/07	2.25	0.39							12/12/07	1.77	0.31			
			12/28/07	1.23	0.21	12/20/07	2.13	0.37							12/14/07	1.45	0.25			
			12/31/07	1.17	0.20	12/21/07	2.20	0.38							12/17/07	1.42	0.25			
			01/02/08	2.33	0.41	12/26/07	2.20	0.38							12/20/07	2.15	0.37			
			01/04/08	2.49	0.43	12/27/07	1.86	0.32							12/21/07	2.12	0.37			
			01/07/08	0.43	0.07	12/28/07	1.89	0.33							12/26/07	2.37	0.41			
			01/09/08	0.54	0.09	12/31/07	1.72	0.30							12/27/07	2.38	0.41			
			01/15/08	0	0.00	01/02/08	1.80	0.31							12/28/07	2.43	0.42			
			01/16/08	0	0.00	01/04/08	1.89	0.33							12/31/07	2.49	0.43			
			01/18/08	0	0.00	01/07/08	1.42	0.25							01/02/08	2.46	0.43			
			01/22/08	0	0.00	01/09/08	1.28	0.22							01/04/08	2.47	0.43			
			01/28/08	0	0.00	01/11/08	1.03	0.18							01/07/08	0.75	0.13			
			02/06/08	0	0.00	01/15/08	0.89	0.15							01/09/08	0.97	0.17			
			02/07/08	0	0.00	01/16/08	0.90	0.16							01/11/08	0.40	0.07			
			02/11/08	0	0.00	01/18/08	0.84	0.15							01/15/08	0.55	0.10			
			02/13/08	0	0.00	01/22/08	1.20	0.21							01/16/08	0.73	0.13			
			02/15/08	0	0.00	01/28/08	2.33	0.41							01/18/08	0.51	0.09			
			02/18/08	0	0.00	02/06/08	1.15	0.20							01/22/08	1.00	0.17			
			02/22/08	0	0.00	02/07/08	0.18	0.03							01/28/08	0.38	0.07			
			02/25/08	0	0.00	02/11/08	1.08	0.19							02/06/08	2.34	0.41			
			02/27/08	0	0.00	02/13/08	0.81	0.14							02/07/08	0.11	0.02			
			02/29/08	0	0.00	02/15/08	0.92	0.16							02/11/08	0.26	0.05			
			03/05/08	0	0.00	02/18/08	0.00	0.00							02/13/08	0.20	0.03			
			03/12/08	0	0.00	02/22/08	0.15	0.03							02/15/08	0.35	0.06			
			03/21/08	0	0.00	02/25/08	0.26	0.05							02/18/08	0.00	0.00			
			03/27/08	0	0.00	02/27/08	0.31	0.05							02/22/08	0.55	0.10			
			03/28/08	0	0.00	02/29/08	0.18	0.03							02/25/08	0.48	0.08			
			04/02/08	0	0.00	03/05/08	0.00	0.00							02/27/08	0.29	0.05			
			04/04/08	0	0.00	03/12/08	0.01	0.00							02/29/08	0.07	0.01			
			04/07/08	0	0.00	03/21/08	0.35	0.06							03/03/08	0.00	0.00			
			04/10/08	0	0.00	03/24/08	0.00	0.00							03/05/08	0.41	0.07			
			04/11/08	0	0.00	03/27/08	0.00	0.00							03/12/08	0.57	0.10			
			04/14/08	0	0.00	03/28/08	0.00	0.00							03/21/08	1.00	0.17			
			04/17/08	0	0.00	04/02/08	0.00	0.00							03/24/08	1.25	0.22			

Table 1
Summary of LNAPL Observations (Pre-LMMP installed wells)
Warner-Lambert
Holland, Michigan

OW-3	OW-3	OW-3	OW-4	OW-4	OW-4	OW-11	OW-11	OW-11	OW-12D	OW-12D	OW-12D	OW-12S	OW-12S	OW-12S	OW-13	OW-13	OW-13	PZ-53	PZ-53	PZ-53
Date	Product (ft)	Product (gal)	**Date**	Product (ft)	Product (gal)	**Date**	Product (ft)	Product (gal)	**Date**	Product (ft)	Product (gal)	**Date**	Product (ft)	Product (gal)	**Date**	Product (ft)	Product (gal)	**Date**	Product (ft)	Product (gal)
			04/18/08	0	0.00	04/04/08	0.00	0.00							03/27/08	1.20	0.21			
			04/22/08	0	0.00	04/07/08	0.00	0.00							03/28/08	0.55	0.10			
			04/24/08	0	0.00	04/10/08	0.00	0.00							04/02/08	1.70	0.30			
			04/28/08	0	0.00	04/11/08	0.00	0.00							04/04/08	1.50	0.26			
			05/01/08	0	0.00	04/14/08	0.00	0.00							04/07/08	0.99	0.17			
			05/02/08	0	0.00	04/17/08	0.00	0.00							04/10/08	0.22	0.04			
			05/06/08	0	0.00	04/18/08	0.00	0.00							04/11/08	0.05	0.01			
			05/08/08	0	0.00	04/22/08	0.00	0.00							04/14/08	0.70	0.12			
			05/12/08	0	0.00	04/24/08	0.00	0.00							04/17/08	1.73	0.30			
			05/15/08	0	0.00	04/28/08	0.00	0.00							04/18/08	0.61	0.11			
			05/20/08	0	0.00	05/01/08	0.00	0.00							04/22/08	0.77	0.13			
			05/21/08	0	0.00	05/02/08	0.00	0.00							04/24/08	0.99	0.17			
			05/23/08	0	0.00	05/06/08	0.00	0.00							04/28/08	1.33	0.23			
			05/27/08	0	0.00	05/08/08	0.00	0.00							05/01/08	0.30	0.05			
			05/29/08	0	0.00	05/12/08	0.00	0.00							05/02/08	0.08	0.01			
			06/02/08	0	0.00	05/15/08	0.00	0.00							05/06/08	0.93	0.16			
			06/04/08	0	0.00	05/20/08	0.00	0.00							05/08/08	0.41	0.07			
			06/06/08	0	0.00	05/21/08	0.00	0.00							05/12/08	1.10	0.19			
			06/11/08	0	0.00	05/23/08	0.00	0.00							05/15/08	1.45	0.25			
			06/13/08	0	0.00	05/27/08	0.00	0.00							05/20/08	1.10	0.19			
			06/16/08	0	0.00	05/29/08	0.00	0.00							05/21/08	1.00	0.17			
			06/20/08	0	0.00	06/02/08	0.00	0.00							05/23/08	0.37	0.06			
			06/23/08	0	0.00	06/04/08	0.00	0.00							05/27/08	0.84	0.15			
			06/26/08	0	0.00	06/06/08	0.00	0.00							05/29/08	0.81	0.14			
			06/27/08	0	0.00	06/11/08	0.00	0.00							06/02/08	1.04	0.18			
			06/30/08	0	0.00	06/13/08	0.00	0.00							06/04/08	1.18	0.21			
			07/01/08	0	0.00	06/16/08	0.00	0.00							06/06/08	1.45	0.25			
			07/09/08	0	0.00	06/20/08	0.00	0.00							06/11/08	1.41	0.25			
			07/11/08	0	0.00	06/23/08	0.00	0.00							06/13/08	0.93	0.16			
			07/15/08	0	0.00	06/26/08	0.00	0.00							06/16/08	1.24	0.22			
			07/17/08	0	0.00	06/27/08	0.00	0.00							06/20/08	0.82	0.14			
			07/22/08	0	0.00	06/30/08	0.00	0.00							06/23/08	1.36	0.24			
			07/23/08	0	0.00	07/01/08	0.00	0.00							06/26/08	1.38	0.24			
			07/25/08	0	0.00	07/09/08	0.00	0.00							06/27/08	1.53	0.27			
			07/28/08	0	0.00	07/11/08	0.00	0.00							06/30/08	0.97	0.17			
			07/30/08	0	0.00	07/15/08	0.00	0.00							07/01/08	1.11	0.19			
			08/01/08	0	0.00	07/17/08	0.00	0.00							07/07/08	1.29	0.22			
			08/04/08	0	0.00	07/22/08	0.00	0.00							07/09/08	1.18	0.21			
			08/06/08	0	0.00	07/23/08	0.01	0.00							07/11/08	1.15	0.20			
			08/08/08	0	0.00	07/25/08	0.00	0.00							07/15/08	1.44	0.25			
			08/13/08	0.2	0.03	07/28/08	0.00	0.00							07/17/08	1.57	0.27			
			08/15/08	0.26	0.05	07/30/08	0.00	0.00							07/22/08	2.20	0.38			
			08/21/08	0.32	0.06	08/01/08	0.00	0.00							07/23/08	1.67	0.29			
			08/22/08	0.7	0.12	08/04/08	0.00	0.00							07/25/08	1.83	0.32			
			08/25/08	0.88	0.15	08/06/08	0.00	0.00							07/28/08	1.97	0.34			
			08/27/08	0.99	0.17	08/08/08	0.06	0.01							07/30/08	0.06	0.01			
			08/29/08	1.09	0.19	08/13/08	0.53	0.09							08/01/08	0.09	0.02			

Table 1
Summary of LNAPL Observations (Pre-LMMP installed wells)
Warner-Lambert
Holland, Michigan

OW-3	OW-3	OW-3	OW-4	OW-4	OW-4	OW-11	OW-11	OW-11	OW-12D	OW-12D	OW-12D	OW-12S	OW-12S	OW-12S	OW-13	OW-13	OW-13	PZ-53	PZ-53	PZ-53
Date	Product (ft)	Product (gal)	**Date**	Product (ft)	Product (gal)	**Date**	Product (ft)	Product (gal)	**Date**	Product (ft)	Product (gal)	**Date**	Product (ft)	Product (gal)	**Date**	Product (ft)	Product (gal)	**Date**	Product (ft)	Product (gal)
			09/03/08	0.97	0.17	08/15/08	0.53	0.09							08/04/08	0.13	0.02			
			09/04/08	1	0.17	08/21/08	0.41	0.07							08/06/08	0.17	0.03			
			09/09/08	1.64	0.29	08/22/08	1.74	0.30							08/08/08	0.18	0.03			
			09/11/08	2	0.35	08/25/08	2.30	0.40							08/13/08	0.29	0.05			
			09/12/08	0.68	0.12	08/27/08	2.50	0.44							08/15/08	0.31	0.05			
			09/15/08	0.92	0.16	08/29/08	2.64	0.46							08/21/08	0.25	0.04			
			09/17/08	1.28	0.22	09/03/08	2.94	0.51							08/22/08	0.18	0.03			
			09/29/08	1.74	0.30	09/04/08	2.20	0.38							08/25/08	0.53	0.09			
			10/03/08	1.87	0.33	09/09/08	3.02	0.53							08/27/08	0.61	0.11			
			10/07/08	1.88	0.33	09/11/08	2.66	0.46							08/29/08	0.54	0.09			
			10/08/08	1.98	0.34	09/12/08	1.42	0.25							09/03/08	0.60	0.10			
			10/13/08	2.07	0.36	09/15/08	1.69	0.29							09/04/08	0.63	0.11			
			10/15/08	2.12	0.37	09/17/08	2.06	0.36							09/09/08	0.45	0.08			
			10/17/08	1.24	0.22	09/29/08	2.09	0.36							09/11/08	0.52	0.09			
			10/22/08	2.21	0.38	10/03/08	2.12	0.37							09/12/08	0.62	0.11			
			10/24/08	3.96	0.69	10/07/08	2.00	0.35							09/15/08	0.51	0.09			
			10/27/08	2.51	0.44	10/08/08	3.47	0.60							09/17/08	0.67	0.12			
			10/31/08	2.2	0.38	10/13/08	3.17	0.55							09/29/08	2.00	0.35			
			11/03/08	2.21	0.38	10/15/08	3.20	0.56							10/03/08	1.54	0.27			
			11/05/08	2.28	0.40	10/17/08	2.54	0.44							10/07/08	0.66	0.11			
			11/07/08	2.12	0.37	10/22/08	1.81	0.31							10/08/08	1.85	0.32			
			11/13/08	2.09	0.36	10/27/08	1.95	0.34							10/13/08	1.94	0.34			
			11/14/08	2.03	0.35	10/31/08	2.09	0.36							10/15/08	1.86	0.32			
			11/17/08	2.09	0.36	11/03/08	1.47	0.26							10/17/08	0.99	0.17			
			11/24/08	2.63	0.46	11/05/08	1.47	0.26							10/22/08	2.08	0.36			
			11/26/08	0.96	0.17	11/07/08	1.69	0.29							10/24/08	2.18	0.38			
			12/01/08	1.79	0.31	11/13/08	2.98	0.52							10/27/08	1.81	0.31			
			01/05/09	0.77	0.13	11/14/08	2.05	0.36							10/31/08	2.09	0.36			
			01/07/09	0	0.00	11/17/08	2.04	0.35							11/03/08	2.53	0.44			
			01/12/09	0	0.00	01/05/09	0.91	0.16							11/05/08	2.57	0.45			
			01/14/09	0	0.00	01/07/09	1.35	0.23							11/12/08	2.89	0.50			
			01/16/09	0	0.00	01/12/09	1.60	0.28							11/13/08	3.06	0.53			
			01/19/09	0	0.00	01/14/09	2.00	0.35							01/05/09	0.88	0.15			
			01/29/09	0	0.00	01/16/09	2.14	0.37							01/07/09	1.10	0.19			
			01/30/09	0	0.00	01/19/09	1.71	0.30							01/12/09	0.79	0.14			
			02/05/09	0	0.00	01/29/09	3.01	0.52							01/14/09	1.67	0.29			
			02/06/09	0	0.00	01/30/09	1.27	0.22							01/16/09	1.21	0.21			
			02/13/09	0.1	0.02	02/05/09	2.61	0.45							01/19/09	0.94	0.16			
			02/17/09	0	0.00	02/06/09	2.63	0.46							02/17/09	0.51	0.09			
			02/19/09	0	0.00	02/13/09	0.00	0.00							02/19/09	0.48	0.08			
			02/20/09	0.04	0.01	02/17/09	0.00	0.00							02/20/09	0.65	0.11			
			02/23/09	0	0.00	02/19/09	0.00	0.00							02/23/09	0.67	0.12			
			02/25/09	0	0.00	02/20/09	0.00	0.00							02/25/09	0.32	0.06			
			02/27/09	0	0.00	02/23/09	0.00	0.00							02/27/09	0.38	0.07			
			03/03/09	0	0.00	02/25/09	0.00	0.00							03/03/09	0.39	0.07			
			03/05/09	0	0.00	03/03/09	0.00	0.00							03/05/09	0.35	0.06			
			03/06/09	0	0.00	03/05/09	0.00	0.00							03/06/09	0.33	0.06			

Table 1
Summary of LNAPL Observations (Pre-LMMP installed wells)
Warner-Lambert
Holland, Michigan

OW-3	OW-3	OW-3	OW-4	OW-4	OW-4	OW-11	OW-11	OW-11	OW-12D	OW-12D	OW-12D	OW-12S	OW-12S	OW-12S	OW-13	OW-13	OW-13	PZ-53	PZ-53	PZ-53
Date	Product (ft)	Product (gal)	**Date**	Product (ft)	Product (gal)	**Date**	Product (ft)	Product (gal)	**Date**	Product (ft)	Product (gal)	**Date**	Product (ft)	Product (gal)	**Date**	Product (ft)	Product (gal)	**Date**	Product (ft)	Product (gal)
			03/12/09	0	0.00	03/06/09	0.00	0.00							03/12/09	0.53	0.09			
			03/13/09	0	0.00	03/16/09	0.00	0.00							03/13/09	0.54	0.09			
			03/16/09	0	0.00	03/23/09	0.01	0.00							03/16/09	0.07	0.01			
			03/23/09	0.1	0.02	03/25/09	0.01	0.00							03/23/09	0.12	0.02			
			03/25/09	0.01	0.00	03/27/09	0.01	0.00							03/25/09	0.37	0.06			
			03/27/09	0.01	0.00	03/31/09	0.01	0.00							03/27/09	0.03	0.01			
			03/31/09	0.02	0.00	04/01/09	0.01	0.00							03/31/09	0.04	0.01			
			04/01/09	0.9	0.16	04/06/09	0.00	0.00							04/01/09	0.63	0.11			
			04/03/09	0	0.00	04/08/09	0.01	0.00							04/06/09	0.01	0.00			
			04/06/09	0.01	0.00	04/10/09	0.01	0.00							04/08/09	0.01	0.00			
			04/08/09	0.01	0.00	04/14/09	0.01	0.00							04/10/09	0.04	0.01			
			04/10/09	0.01	0.00	04/16/09	0.01	0.00							04/14/09	0.70	0.12			
			04/14/09	0.01	0.00	04/17/09	0.00	0.00							04/16/09	0.01	0.00			
			04/16/09	0.01	0.00	04/20/09	0.01	0.00							04/17/09	0.04	0.01			
			04/17/09	0.01	0.00	04/23/09	0.00	0.00							04/23/09	0.51	0.09			
			04/20/09	0.01	0.00	04/24/09	0.00	0.00							04/24/09	0.01	0.00			
			04/23/09	0.01	0.00	04/27/09	0.00	0.00							04/27/09	0.64	0.11			
			04/24/09	0	0.00	04/29/09	0.01	0.00							04/29/09	0.02	0.00			
			04/27/09	0	0.00	05/04/09	0.01	0.00							05/04/09	0.73	0.13			
			04/29/09	0	0.00	05/06/09	0.01	0.00							05/06/09	0.10	0.02			
			05/04/09	0	0.00	05/14/09	0.00	0.00							05/14/09	0.01	0.00			
			05/06/09	0	0.00	05/18/09	0.01	0.00							05/18/09	0.21	0.04			
			05/14/09	0.01	0.00	05/20/09	0.01	0.00							05/20/09	0.01	0.00			
			05/18/09	0.01	0.00	05/26/09	0.00	0.00							05/26/09	0.20	0.03			
			05/20/09	0.01	0.00	05/28/09	0.00	0.00							05/28/09	0.35	0.06			
			05/26/09	0.01	0.00	06/02/09	0.01	0.00							06/02/09	0.01	0.00			
			05/28/09	0.01	0.00	06/08/09	0.01	0.00							06/08/09	0.10	0.02			
			06/02/09	0.01	0.00	06/11/09	0.00	0.00							06/11/09	0.20	0.03			
			06/08/09	0.01	0.00	06/15/09	0.00	0.00							06/15/09	0.13	0.02			
			06/11/09	0.01	0.00	06/18/09	0.00	0.00							06/18/09	0.18	0.03			
			06/15/09	0.03	0.01	06/22/09	0.00	0.00							06/22/09	0.10	0.02			
			06/18/09	0.01	0.00	06/25/09	0.00	0.00							06/25/09	0.07	0.01			
			06/22/09	0	0.00	06/29/09	0.00	0.00							06/29/09	0.11	0.02			
			06/25/09	0	0.00	07/06/09	0.00	0.00							07/06/09	0.16	0.03			
			06/29/09	0	0.00	07/09/09	0.00	0.00							07/09/09	0.06	0.01			
			07/06/09	0.01	0.00	07/13/09	0.00	0.00							07/13/09	0.08	0.01			
			07/09/09	0	0.00	07/16/09	0.00	0.00							07/16/09	0.01	0.00			
			07/13/09	0	0.00	07/20/09	0.00	0.00							07/20/09	0.11	0.02			
			07/16/09	0	0.00	07/23/09	0.00	0.00							07/23/09	0.18	0.03			
			07/20/09	0	0.00	07/27/09	0.00	0.00							07/27/09	0.16	0.03			
			07/23/09	0	0.00	07/30/09	0.00	0.00							07/30/09	0.01	0.00			
			07/27/09	0	0.00	08/03/09	0.00	0.00							08/03/09	0.21	0.04			
			07/30/09	0	0.00	08/06/09	0.00	0.00							08/06/09	0.15	0.03			
			08/03/09	0	0.00	08/10/09	0.00	0.00							08/10/09	0.14	0.02			
			08/06/09	0	0.00	08/13/09	0.00	0.00							08/13/09	0.15	0.03			
			08/10/09	0	0.00	08/17/09	0.00	0.00							08/17/09	0.11	0.02			
			08/13/09	0	0.00	08/20/09	0.00	0.00							08/20/09	0.06	0.01			

Table 1
Summary of LNAPL Observations (Pre-LMMP installed wells)
Warner-Lambert
Holland, Michigan

OW-3	OW-3	OW-3	OW-4	OW-4	OW-4	OW-11	OW-11	OW-11	OW-12D	OW-12D	OW-12D	OW-12S	OW-12S	OW-12S	OW-13	OW-13	OW-13	PZ-53	PZ-53	PZ-53
Date	Product (ft)	Product (gal)	**Date**	Product (ft)	Product (gal)	**Date**	Product (ft)	Product (gal)	**Date**	Product (ft)	Product (gal)	**Date**	Product (ft)	Product (gal)	**Date**	Product (ft)	Product (gal)	**Date**	Product (ft)	Product (gal)
			08/17/09	0	0.00	08/24/09	0.00	0.00							08/24/09	0.27	0.05			
			08/20/09	0	0.00	08/27/09	0.00	0.00							08/27/09	0.21	0.04			
			08/24/09	0.07	0.01	08/31/09	0.00	0.00							08/31/09	0.24	0.04			
			08/27/09	0.05	0.01	09/03/09	0.00	0.00							09/03/09	0.20	0.03			
			08/31/09	0.09	0.02	09/08/09	0.00	0.00							09/08/09	0.21	0.04			
			09/03/09	0.1	0.02	09/10/09	0.00	0.00							09/10/09	0.18	0.03			
			09/08/09	0.11	0.02	09/14/09	0.00	0.00							09/14/09	0.24	0.04			
			09/10/09	0.09	0.02	09/17/09	0.00	0.00							09/17/09	0.13	0.02			
			09/14/09	0.15	0.03	09/21/09	0.00	0.00							09/21/09	0.23	0.04			
			09/17/09	0.3	0.05	09/24/09	0.00	0.00							09/24/09	0.28	0.05			
			09/21/09	0.21	0.04	09/28/09	0.00	0.00							09/28/09	0.08	0.01			
			09/24/09	0.14	0.02	10/01/09	0.00	0.00							10/01/09	0.10	0.02			
			09/28/09	0.51	0.09	10/05/09	0.00	0.00							10/05/09	0.15	0.03			
			10/01/09	0.38	0.07	10/08/09	0.00	0.00							10/08/09	0.08	0.01			
			10/05/09	0.5	0.09	10/12/09	0.00	0.00							10/12/09	0.10	0.02			
			10/08/09	0.14	0.02	12/14/09	0.00	0.00							12/14/09	0.61	0.11			
			10/12/09	0.16	0.03	12/17/09	0.00	0.00							12/17/09	0.26	0.05			
			12/14/09	0.83	0.14	12/21/09	0.00	0.00							12/21/09	0.28	0.05			
			12/17/09	0.45	0.08	12/28/09	0.00	0.00							12/28/09	0.22	0.04			
			12/21/09	0.34	0.06	12/30/09	0.00	0.00							12/30/09	0.01	0.00			
			12/28/09	0.31	0.05	12/31/09	0.00	0.00							12/31/09	0.01	0.00			
			12/30/09	0.01	0.00	01/04/10	0.00	0.00							01/04/10	0.16	0.03			
			12/31/09	0.07	0.01	01/11/10	0.00	0.00							01/11/10	0.12	0.02			
			01/04/10	0.08	0.01	01/18/10	0.00	0.00							01/18/10	0.04	0.01			
			01/11/10	0.13	0.02	01/25/10	0.00	0.00							01/25/10	0.02	0.00			
			01/18/10	0.15	0.03	02/01/10	0.00	0.00							02/01/10	0.05	0.01			
			01/25/10	0.18	0.03	02/08/10	0.00	0.00							02/08/10	0.19	0.03			
			02/01/10	0.18	0.03	02/15/10	0.00	0.00							02/15/10	0.02	0.00			
			02/08/10	0.21	0.04	02/22/10	0.00	0.00							02/22/10	0.07	0.01			
			02/15/10	0.7	0.12	03/01/10	0.00	0.00							03/01/10	0.12	0.02			
			02/22/10	0.7	0.12	03/08/10	0.00	0.00							03/08/10	0.11	0.02			
			03/01/10	0.75	0.13	03/15/10	0.00	0.00							03/15/10	0.11	0.02			
			03/08/10	0.69	0.12	03/22/10	0.00	0.00							03/22/10	0.05	0.01			
			03/15/10	0.12	0.02	03/29/10	0.00	0.00							03/29/10	0.11	0.02			
			03/22/10	0.03	0.01	04/05/10	0.00	0.00							04/05/10	0.02	0.00			
			03/29/10	0.03	0.01	04/12/10	0.00	0.00							04/12/10	0.09	0.02			
			04/05/10	0.03	0.01	04/19/10	0.00	0.00							04/19/10	0.08	0.01			
			04/12/10	0.06	0.01	04/26/10	0.00	0.00							04/26/10	0.02	0.00			
			04/19/10	0.23	0.04	05/03/10	0.00	0.00							05/03/10	0.21	0.04			
			04/26/10	0.05	0.01	05/10/10	0.00	0.00							05/10/10	0.04	0.01			
			05/03/10	0.62	0.11	05/17/10	0.00	0.00							05/17/10	0.01	0.00			
			05/10/10	0.16	0.03	05/26/10	0.00	0.00							05/26/10	0.15	0.03			
			05/17/10	0.07	0.01	06/08/10	0.00	0.00							06/08/10	0.05	0.01			
			05/26/10	0.2	0.03	06/22/10	0.00	0.00							06/22/10	0.20	0.03			
			06/08/10	0.39	0.07	06/29/10	0.00	0.00							06/29/10	0.01	0.00			
			06/22/10	1.39	0.24	07/13/10	0.00	0.00							07/13/10	0.12	0.02			
			06/29/10	0.02	0.00	07/20/10	0.00	0.00							07/20/10	0.15	0.03			

Table 1
Summary of LNAPL Observations (Pre-LMMP installed wells)
Warner-Lambert
Holland, Michigan

OW-3	OW-3	OW-3	OW-4	OW-4	OW-4	OW-11	OW-11	OW-11	OW-12D	OW-12D	OW-12D	OW-12S	OW-12S	OW-12S	OW-13	OW-13	OW-13	PZ-53	PZ-53	PZ-53
Date	Product (ft)	Product (gal)	**Date**	Product (ft)	Product (gal)	**Date**	Product (ft)	Product (gal)	**Date**	Product (ft)	Product (gal)	**Date**	Product (ft)	Product (gal)	**Date**	Product (ft)	Product (gal)	**Date**	Product (ft)	Product (gal)
			07/13/10	0.02	0.00	07/27/10	0.00	0.00							07/27/10	0.13	0.02			
			07/20/10	0.1	0.02	08/03/10	0.00	0.00							08/03/10	0.10	0.02			
			07/27/10	0.15	0.03	08/10/10	0.00	0.00							08/10/10	0.07	0.01			
			08/03/10	0.1	0.02	08/17/10	0.00	0.00							08/17/10	0.21	0.04			
			08/10/10	0.1	0.02	08/24/10	0.00	0.00							08/24/10	0.17	0.03			
			08/17/10	0.34	0.06	08/31/10	0.00	0.00							08/31/10	0.30	0.05			
			08/24/10	0.72	0.13	09/07/10	0.00	0.00							09/07/10	0.38	0.07			
			08/31/10	0.88	0.15	09/14/10	0.00	0.00							09/14/10	0.11	0.02			
			09/07/10	0.95	0.17	09/21/10	0.00	0.00							09/21/10	0.03	0.01			
			09/14/10	1.5	0.26	09/28/10	0.00	0.00							09/28/10	0.05	0.01			
			09/21/10	1.05	0.18	10/05/10	0.00	0.00							10/05/10	0.06	0.01			
			09/28/10	1.73	0.30	10/11/10	0.00	0.00							10/11/10	0.04	0.01			
			10/05/10	2.67	0.46	10/19/10	0.00	0.00							10/19/10	0.06	0.01			
			10/07/10	1.61	0.28	10/27/10	0.00	0.00							10/27/10	0.09	0.02			
			10/11/10	2.26	0.39	11/03/10	0.00	0.00							11/03/10	0.03	0.01			
			10/19/10	3.35	0.58	11/09/10	0.00	0.00							11/09/10	0.04	0.01			
			10/27/10	3.57	0.62	11/16/10	0.00	0.00							11/16/10	0.05	0.01			
			11/03/10	3.61	0.63	11/23/10	0.00	0.00							11/23/10	0.05	0.01			
			11/09/10	3.23	0.56	11/30/10	0.00	0.00							11/30/10	0.01	0.00			
			11/16/10	3.3	0.57	12/07/10	0.00	0.00							12/07/10	0.03	0.01			
			11/23/10	3.56	0.62	12/14/10	0.00	0.00							12/14/10	0.12	0.02			
			11/30/10	2.89	0.50	12/22/10	0.00	0.00							12/22/10	0.13	0.02			
			12/07/10	2.77	0.48	12/29/10	0.00	0.00							12/29/10	0.07	0.01			
			12/14/10	1.98	0.34	01/04/11	0.00	0.00							01/04/11	0.08	0.01			
			12/22/10	0.46	0.08	01/11/11	0.00	0.00							01/11/11	0.12	0.02			
			12/29/10	0.95	0.17	01/18/11	0.00	0.00							01/18/11	0.17	0.03			
			01/04/11	1.23	0.21	01/25/11	0.00	0.00							01/25/11	0.20	0.03			
			01/11/11	0.95	0.17	02/01/11	0.00	0.00							02/01/11	0.08	0.01			
			01/18/11	1.01	0.18	02/07/11	0.00	0.00							02/07/11	0.10	0.02			
			01/25/11	1.22	0.21	02/15/11	0.00	0.00							02/15/11	0.09	0.02			
			02/01/11	0.43	0.07	02/22/11	0.00	0.00							02/22/11	0.15	0.03			
			02/07/11	0.24	0.04	03/01/11	0.00	0.00							03/01/11	0.18	0.03			
			02/15/11	0.41	0.07	03/08/11	0.00	0.00							03/08/11	0.05	0.01			
			02/22/11	0.23	0.04	03/15/11	0.00	0.00							03/15/11	0.18	0.03			
			03/01/11	0.18	0.03	03/22/11	0.00	0.00							03/22/11	0.17	0.03			
			03/08/11	0.26	0.05	03/28/11	0.00	0.00							03/28/11	0.21	0.04			
			03/15/11	0.21	0.04	04/05/11	0.00	0.00							04/05/11	0.07	0.01			
			03/22/11	0.13	0.02	04/12/11	0.00	0.00							04/12/11	0.02	0.00			
			03/28/11	0.16	0.03	04/19/11	0.00	0.00							04/19/11	0.12	0.02			
			04/05/11	0.1	0.02	04/29/11	0.00	0.00							04/29/11	0.12	0.02			
			04/12/11	0.16	0.03	05/03/11	0.00	0.00							05/03/11	0.05	0.01			
			04/19/11	0.57	0.10	05/10/11	0.00	0.00							05/10/11	0.04	0.01			
			04/29/11	0.69	0.12	05/17/11	0.00	0.00							05/17/11	0.11	0.02			
			05/03/11	0.43	0.07	05/24/11	0.00	0.00							05/24/11	0.13	0.02			
			05/10/11	0.54	0.09	06/01/11	0.00	0.00							06/01/11	0.37	0.06			
			05/17/11	0.25	0.04	06/08/11	0.00	0.00							06/08/11	0.17	0.03			
			05/24/11	0.18	0.03	06/14/11	0.00	0.00							06/14/11	0.20	0.03			

Table 1
Summary of LNAPL Observations (Pre-LMMP installed wells)
Warner-Lambert
Holland, Michigan

OW-3	OW-3	OW-3	OW-4	OW-4	OW-4	OW-11	OW-11	OW-11	OW-12D	OW-12D	OW-12D	OW-12S	OW-12S	OW-12S	OW-13	OW-13	OW-13	PZ-53	PZ-53	PZ-53
Date	Product (ft)	Product (gal)	**Date**	Product (ft)	Product (gal)	**Date**	Product (ft)	Product (gal)	**Date**	Product (ft)	Product (gal)	**Date**	Product (ft)	Product (gal)	**Date**	Product (ft)	Product (gal)	**Date**	Product (ft)	Product (gal)
			06/01/11	0.12	0.02	06/21/11	0.00	0.00							06/21/11	0.10	0.02			
			06/08/11	0.05	0.01	06/28/11	0.00	0.00							06/28/11	0.05	0.01			
			06/14/11	0.04	0.01	07/06/11	0.00	0.00							07/06/11	0.58	0.10			
			06/21/11	0.1	0.02	07/12/11	0.00	0.00							07/12/11	0.60	0.10			
			06/28/11	0.25	0.04	07/20/11	0.00	0.00							07/20/11	0.24	0.04			
			07/06/11	0.33	0.06	07/27/11	0.01	0.00							07/27/11	0.30	0.05			
			07/12/11	0.4	0.07	08/02/11	0.00	0.00							08/02/11	0.17	0.03			
			07/20/11	0.38	0.07	08/10/11	0.00	0.00							08/10/11	0.30	0.05			
			07/27/11	0.21	0.04	08/24/11	0.00	0.00							08/17/11	0.61	0.11			
			08/02/11	0.39	0.07	08/30/11	0.10	0.02							08/24/11	0.36	0.06			
			08/10/11	0.28	0.05	09/07/11	0.00	0.00							08/30/11	0.78	0.14			
			08/17/11	0.1	0.02	09/13/11	0.01	0.00							09/07/11	0.30	0.05			
			08/24/11	0.36	0.06	09/21/11	0.01	0.00							09/13/11	0.15	0.03			
			08/30/11	0.7	0.12	09/29/11	0.00	0.00							09/21/11	0.20	0.03			
			09/07/11	0.3	0.05	10/04/11	0.00	0.00							09/29/11	0.13	0.02			
			09/13/11	0.61	0.11	10/11/11	0.01	0.00							10/04/11	0.14	0.02			
			09/21/11	0.63	0.11	10/18/11	0.00	0.00							10/11/11	0.40	0.07			
			09/29/11	0.1	0.02	10/25/11	0.10	0.02							10/18/11	0.28	0.05			
			10/04/11	0.43	0.07	10/31/11	0.01	0.00							10/25/11	1.22	0.21			
			10/11/11	0.23	0.04	12/07/11	0.00	0.00							10/31/11	0.40	0.07			
			10/18/11	0.15	0.03	12/15/11	0.00	0.00							11/18/11	1.23	0.21			
			10/25/11	0.1	0.02	12/27/11	0.00	0.00							11/28/11	0.40	0.07			
			10/31/11	0.1	0.02	01/11/12	0.00	0.00							12/07/11	2.32	0.40			
			11/28/11	0	0.00	01/24/12	0.00	0.00							12/15/11	0.06	0.01			
			12/07/11	0	0.00	02/07/12	0.00	0.00							12/27/11	1.57	0.27			
			12/15/11	0	0.00	02/21/12	0.00	0.00							01/11/12	1.54	0.27			
			01/24/12	0.02	0.00	03/06/12	0.00	0.00							01/24/12	2.05	0.36			
			02/07/12	0.1	0.02	03/14/12	0.00	0.00							02/07/12	1.58	0.27			
			02/21/12	0.01	0.00	04/04/12	0.00	0.00							02/21/12	0.70	0.12			
			03/06/12	0.11	0.02	04/11/12	0.00	0.00							03/06/12	0.50	0.09			
			03/14/12	0.01	0.00	04/18/12	0.00	0.00							03/14/12	0.30	0.05			
			04/04/12	0	0.00	04/25/12	0.00	0.00							04/04/12	0.30	0.05			
			04/11/12	0	0.00	05/02/12	0.00	0.00							04/11/12	0.37	0.06			
			04/18/12	0	0.00	05/08/12	0.00	0.00							04/18/12	0.03	0.01			
			04/25/12	0	0.00	05/16/12	0.00	0.00							04/25/12	0.15	0.03			
			05/02/12	0	0.00	05/29/12	0.00	0.00							05/02/12	0.08	0.01			
			05/08/12	0	0.00	06/01/12	0.00	0.00							05/08/12	0.10	0.02			
			05/16/12	0	0.00	09/14/12	0.00	0.00							05/16/12	0.05	0.01			
			05/23/12	0	0.00	10/12/12	0.00	0.00							05/23/12	0.16	0.03			
			06/06/12	0	0.00	10/18/12	0.00	0.00							05/29/12	0.07	0.01			
															06/06/12	0.05	0.01			
															06/13/12	0.09	0.02			
															06/27/12	0.00	0.00			
															07/03/12	0.25	0.04			
															10/18/12	0.00	0.00			

Table 2
Summary of LMMP LNAPL Observations and Recovery
Warner-Lambert
Holland, Michigan

	(ft)	(gallons)		(ft)	(gallons)	
	LBOW-1	LBOW-1	Recovery?	OW-12D	OW-12D	Recovery?
7/21/2014	0.18	0.03	no	0.23	0.04	no
7/28/2014	0.34	0.06	no	0.42	0.07	no
8/4/2014	0.21	0.04	no	0.51	0.09	yes
8/11/2014	0.05	0.01	no	0.37	0.06	no
8/18/2014	0.66	0.11	yes	1.73	0.30	yes
8/25/2014	0.00	0.00	no	0.05	0.01	no
9/1/2014	0.14	0.02	yes	1.06	0.18	yes
9/10/2014	0.10	0.02	no	0.23	0.04	no
9/15/2014	0.60	0.10	yes	0.51	0.09	yes
9/22/2014	0.21	0.04	no	0.07	0.01	no
9/29/2014	0.61	0.11	yes	0.12	0.02	no
10/6/2014	0.29	0.05	no	0.52	0.09	yes
10/13/2014	0.38	0.07	no	0.24	0.04	no
10/20/2014	0.52	0.09	yes	0.60	0.10	yes
10/27/2014	0.15	0.03	no	0.25	0.04	no
11/3/2014	0.35	0.06	no	0.18	0.03	no
11/10/2014	0.47	0.08	yes	0.30	0.05	no
11/17/2014	0.23	0.04	no	0.38	0.07	no
11/24/2016	0.33	0.06	no	0.46	0.08	no
12/1/2014	0.49	0.09	yes	0.54	0.09	yes
12/8/2014	0.17	0.03	no	0.21	0.04	no
12/15/2014	0.20	0.03	no	0.30	0.05	no
12/22/2014	0.23	0.04	no	0.38	0.07	no
12/29/2014	0.31	0.05	no	0.47	0.08	yes
1/5/2015	0.33	0.06	no	0.07	0.01	no
1/12/2014	0.39	0.07	no	0.22	0.04	no
1/19/2015	0.51	0.09	yes	0.32	0.06	no
1/26/2015	0.01	0.00	no	0.45	0.08	yes
2/4/2015	0.01	0.00	no	0.07	0.01	no
2/11/2015	0.51	0.09	yes	0.06	0.01	no
2/16/2015	0.06	0.01	no	0.08	0.01	no
2/23/2015	0.19	0.03	no	0.13	0.02	no
3/2/2015	4.61	0.80	yes	0.05	0.01	no
3/6/2015	0.84	0.15	yes	0.03	0.01	no
3/13/2015	1.20	0.21	yes	0.09	0.02	no
3/16/2015	0.32	0.06	no	0.14	0.02	no
3/23/2015	0.35	0.06	yes	0.06	0.01	no
3/30/2015	0.12	0.02	no	0.14	0.02	no
4/6/2015	0.72	0.13	yes	0.18	0.03	no
4/13/2015	0.16	0.03	no	0.22	0.04	no

Table 2
Summary of LMMP LNAPL Observations and Recovery
Warner-Lambert
Holland, Michigan

	(ft)	(gallons)		(ft)	(gallons)	
	LBOW-1	LBOW-1	Recovery?	OW-12D	OW-12D	Recovery?
4/20/2015	0.48	0.08	no	0.22	0.04	no
4/27/2015	0.79	0.14	yes	0.13	0.02	no
5/4/2015	0.70	0.12	yes	0.27	0.05	no
5/11/2015	0.57	0.10	yes	0.22	0.04	no
5/18/2015	0.15	0.03	no	0.13	0.02	no
5/26/2015	1.34	0.23	yes	0.23	0.04	no
6/1/2015	0.87	0.15	yes	0.34	0.06	no
6/8/2015	0.39	0.07	no	0.35	0.06	no
6/15/2015	1.06	0.18	yes	0.30	0.05	no
6/22/2015	0.52	0.09	yes	0.26	0.05	no
6/29/2015	0.74	0.13	yes	0.27	0.05	no
7/6/2015	0.62	0.11	yes	0.72	0.13	yes
7/13/2015	0.46	0.08	no	0.05	0.01	no
7/20/2015	0.91	0.16	yes	0.09	0.02	no
7/27/2015	0.43	0.07	no	0.07	0.01	no
8/3/2015	0.96	0.17	yes	0.11	0.02	no
8/10/2015	0.11	0.02	no	0.09	0.02	no
8/17/2015	1.04	0.18	yes	0.13	0.02	no
8/24/2015	0.03	0.01	no	0.14	0.02	no
8/31/2015	0.07	0.01	no	0.15	0.03	no
9/8/2015	0.03	0.01	no	0.16	0.03	no
9/14/2015	0.06	0.01	no	0.17	0.03	no
9/21/2015	0.07	0.01	no	0.21	0.04	no
9/28/2015	0.30	0.05	no	0.12	0.02	no
10/5/2015	1.21	0.21	yes	0.23	0.04	no
10/12/2015	0.55	0.10	yes	0.54	0.09	yes
11/2/2015	2.75	0.48	yes			
12/2/2015	1.15	0.20	yes			
1/4/2016	0.14	0.02	yes			
2/2/2016	0.01	0.00	no			
3/2/2016	0.07	0.01	no			
4/4/2016	0.43	0.07	no			
5/2/2016	0.24	0.04	no			
6/1/2016	0.34	0.06	no			
7/5/2016	0.36	0.06	no			
8/1/2016	0.43	0.07	no			
9/6/2016	0.36	0.06	no			
10/3/2016	0.39	0.07	no			
1/2/2017	1.54	0.27	yes			

Yellow shading indicates LNAPL recovery was completed

Table 3
Summary of Estimated LNAPL Transmissivity
Warner-Lambert
Holland, Michigan

Monitoring Well	Time	Collected	Average Product Thickness	Total Collected LNAPL	Bottom of Fill Elevation	Transmissivity
	from	to	(ft)	(gal)	(ft)	ft2/day
OW-3	11/07/07	08/30/11	0.24	11.52	578.40	0.00335
OW-4	05/12/04	10/18/12	0.78	94.65	578.10	0.00386
OW-11	05/12/04	10/18/12	1.04	126.38	578.60	0.00386
OW-12D	01/02/07	10/18/12	0.39	21.02	575.50	0.00249
OW-12S	11/16/07	10/18/12	0.80	40.62	575.50	0.00276
OW-13	05/12/04	10/18/12	1.13	138.40	581.40	0.00390
PZ-53	03/01/11	10/18/12	0.16	1.89	576.00	0.00194
Measured Thickness/Volume (Regardless of recovery)						
LBOW-1	07/21/14	01/02/17	0.51	7.00	579.00	0.00150
OW-12D	07/21/14	10/12/15	0.44	1.53	575.70	0.00076
Based on Recovery events only						
LBOW-1	07/21/14	01/02/17	0.93	5.17	579.00	0.00063
OW-12D	07/21/14	10/12/15	0.70	1.62	575.70	0.00052

Attachment 2

Observation Well Inspection Record Form

Warner Lambert Former Plant Site
Holland, Michigan

LNAPL Inspection Record

Date:_____

Start Time: _____

Weather:_____

HCS Operation: EW #1__ gpm, EW #2R _____ gpm, EW#3 _____ gpm, EW #4 ____ gpm, EW #5 _____ (*indicate normal daily operation or identify upset condition, if applicable*)

Observation Well Condition: _____(*inspect physical condition of LBOW-1, LBOW-2 and PZ-53 as well as SOWs even though not monitored as part of program*)

Well Inspection Data

Well Type	Well No.	Time	Product ck/ method	Depth to Product (ft)	Depth to Water (ft)	Product Thickness(ft)	Product Recovered (L)	Notes: (e.g. product description, odors)
Sentinel Observation Wells	SOW-1		Interface probe					
	SOW-2		Interface probe					
	SOW-3		Interface probe					
	SOW-4		Interface probe					
	SOW-5		Interface probe					
	PZ-52		Interface probe					

NOTES:

Appendix L

Ground Water Monitoring & Assessment Plan (Contiguous Parcels)

Ground Water Monitoring & Assessment Plan

Macatawa Warehouse Development and Dunton Park Properties
Holland Charter Township

Ottawa County, Michigan

Prepared for

May 2014
Revision 1: March 2016
Revision 2: April 2022

3033 Orchard Vista Drive, SE, Suite 200
Grand Rapids, MI 49546
616.512.7000
www.barr.com

Groundwater Monitoring and Assessment Plan

April 2022

Contents

1 Introduction 1
1.1 Background 1
1.2 Objective 1
2 Sampling Locations 2
3 Monitoring Frequency and Parameters 2
4 Sampling Procedures 3
4.1 Well and Equipment Inspections 3
4.2 Measurement of Water Elevations 3
4.3 Groundwater Purging and Sampling 3
4.3.1 Sampling Equipment 3
4.3.2 Field Measurements and Well Purging 4
4.3.3 Sample Collection and Handling 4
5 Chain-of-Custody Procedures 5
5.1 Sample Identification Labels 5
5.2 Field Forms 5
5.3 Chain-of-Custody Form 5
6 Sample Analysis Procedures 5
6.1 Laboratory 5
6.2 Analytical Methods 6
7 Quality Assurance/Quality Control Programs (QA/QC) 6
7.1 Field QA/QC 6
7.2 Laboratory QA/QC 6
8 Data Evaluation and Reporting 6

List of Figures

Figure 1	Site Location Map
Figure 2	Site Plan with Property Designations
Figure 3	Groundwater Monitoring Locations - MWD and Dunton Park

List of Tables

Table 1	Parameters, Detection Limits, Analytical Methods, and Holding Times

List of Attachments

Attachment 1	Field Data Entry Form
Attachment 2	Standard Operating Procedures
Attachment 3	Chain-of-Custody Form

1 Introduction

This Ground Water Monitoring and Assessment Plan (GWMAP) describes ground water monitoring and assessment activities to be performed on two properties adjacent to the Warner-Lambert Company LLC's former manufacturing plant in Holland Charter Township, Ottawa County, Michigan (MID 006 013 643). These properties include a marina property owned by Macatawa Warehouse Development (MWD) LLC and the Howard B. Dunton Park owned by Holland Charter Township (Dunton Park). A site location map is provided in Figure 1. The layout of the former manufacturing plant and associated properties and the adjacent off-site MWD and Dunton Park properties is depicted on Figure 2.

The ground water monitoring and assessment activities described in this plan are being conducted as part of a Final Remedial Action Plan (RAP)/Corrective Measures Implementation Plan (CMIP) which was approved by the Michigan Department of Environment, Great Lakes and Energy (EGLE) on June 20, 2014. The Final RAP/CMIP was completed in fulfillment of the facility's corrective action obligations as specified in the Hazardous and Solid Waste Amendments of 1984 (42 USC 6901 et. seq.), Parts 111 and 201 of Michigan's Natural Resources and Environmental Protection Act (Public Act 451 of 1994, as amended), the Toxics Substances Control Act (15 USC 2601 et seq.), regulations and guidance promulgated pursuant to these statutes, and the terms and conditions of a Post-Closure Plan/Corrective Action Consent Order executed with EGLE.

1.1 Background

The original version of the GWMAP (Version 0) was issued in May 2014 and approved as part of the CMIP approval process on June 20, 2014. A revised GWMAP (Version 1) was prepared in March 2016 and approved by EGLE on April 21, 2016. Version 1 of the GWMAP revised the scope of GWMAP based on the results of sampling and analysis during a prescribed Initial Assessment Period. Scope changes included the elimination of sampling and analysis for metals, semi-volatile organic compounds (SVOCs), volatile organic compounds (with the exception of chlorobenzene), ammonia, and Active Pharmaceutical Ingredients (API) with the exception of Phenytoin. Version 1 of the GWMAP also incorporated monitoring to support compliance with a mixing zone determination granted for the site by EGLE in 2014. The scope of work for Version 1 of the GWMAP included semi-annual monitoring of groundwater from seven monitoring wells for Phenytoin and chlorobenzene.

1.2 Objective

The objective of this Ground Water Monitoring and Assessment Plan (Revision 2) is to monitor concentrations of chlorobenzene and phenytoin in ground water at locations and at a frequency that will continue to document ongoing compliance with mixing zone-based GSI criteria, generate the data necessary to periodically update the mixing zone determination[1], and establish a set of prescribed conditions which, once achieved, will allow for the termination of the GWMAP. The revision to the

[1] A request for renewal of the 2014 mixing zone determination was submitted to EGLE on April 3, 2019. EGLE action on this determination renewal is pending as of the date of this plan.

GWMAP will also incorporate the previously requested reduction in monitoring frequency from semi-annual to annual approved by EGLE on February 3, 2022.

2 Sampling Locations

Groundwater samples and water elevation measurements will be collected from the following 7 monitoring wells located on the MWD and Dunton Park properties at locations proximate to the point at which ground water vents to Lake Macatawa:

Macatawa Warehouse Development Property	Dunton Park
MW-MWD-1	MW-DP-1
MW-MWD-1D	MW-DP-1D
	MW-DP-2
	MW-DP-3
	MW-DP-3D

These wells were selected for monitoring to characterize the groundwater quality in the upper sand aquifer just prior to reaching the GSI for the purpose of assessing ongoing compliance with the mixing zone determination.

The locations of these wells are shown on Figure 3. Groundwater elevation measurements will also be collected from other well/piezometer locations upgradient of the ground water-surface water interface so that gradients across the sites can be confirmed (e.g., MW-51, PZ-1-O, PZ-2-O, etc.).

3 Monitoring Frequency and Parameters

Sampling events will be performed on an annual basis (once per year) with a target to complete the sampling event in May of each year.

The following constituents have been selected for analysis based on evaluation of previous monitoring results including the data collected during the initial assessment period. These constituents were the only analytes detected in ground water during the initial assessment period at concentrations exceeding applicable generic GSI criteria; however, the levels detected were below their respective mixing zone-based GSI criteria.

Constituents	U.S. EPA Method
Chlorobenzene	8260
Phenytoin	8270

The target detection limits, analytical methods, bottle and preservative types, and holding times for these analytes are presented in Table 1.

4 Sampling Procedures

The procedures used to sample groundwater can influence the quality of the data produced in a monitoring program. By following the sample collection procedures described in this section, samples and data will be generated which are representative of the actual site conditions at the time of the sampling.

4.1 Well and Equipment Inspections

Equipment integral to the implementation of the ground water monitoring program will be inspected at the initiation of each monitoring event. This includes inspection/evaluation of the well casing, well cap/lock, and other associated monitoring equipment.

Damaged equipment or other maintenance needs identified during the inspection will be recorded by the sampler on the Field Form provided in Attachment 1. Required repair or maintenance of equipment will be implemented as soon as practical after identification during the equipment inspection. After completion of the repair/maintenance, the original inspection form will be maintained, along with a description of the corrective action implemented to correct the problem. Equipment repairs and required maintenance will be described in reports to EGLE.

4.2 Measurement of Water Elevations

The static water elevation will be measured in each monitoring well during each sampling event at the site. The distance from the top of casing (TOC) to the static water level will be measured to within 0.01 foot using an electronic water level indicator. Groundwater elevations will be calculated by subtracting the distance from the TOC to the static water level from the TOC elevation. The device used to measure the water level will be rinsed with deionized or distilled water after each use.

4.3 Groundwater Purging and Sampling

4.3.1 Sampling Equipment

Groundwater sampling will be completed using standard low-flow sampling methods. Sampling equipment consists of a peristaltic pump and new single-use or dedicated polyethylene sample tubing. The low-flow sampling using a peristaltic pump and single-use or dedicated tubing allows for collection of samples representative of the monitored formation while reducing the possibility of cross-contamination by introduction of sampling devices. Using new or dedicated sampling devices also precludes the need to decontaminate the sampling device. The sample tubing will be measured so the intake of the tubing is located approximately at the mid-point of the well screen and will be gently inserted into the well to minimize any mixing of the casing water and/or accumulated sediment.

4.3.2 Field Measurements and Well Purging

In addition to static water elevation, the following indicator parameters will be measured using a flow cell and allowed to stabilize during the well purging in each well prior to collecting samples (stabilization parameters noted in parentheses).

- dissolved oxygen (10% or <5 mg/L)
- pH (+/- 0.1 s.u.)
- specific conductance (+/- 3 %)
- turbidity (10% or less than <5 NTUs)
- temperature (+/- 3 %)
- oxidation/reduction potential (+/- 10 mV)

The multiparameter meter will be calibrated daily according to the manufacturer's specifications for calibration. The calibration will be checked periodically during the day with the calibration solution to ensure the stability of the calibration. Any errors, problems, other significant calibration events will be noted in the field log book.

Prior to the collection of each groundwater sample, stagnant water will be removed from each monitoring well. The wells will be purged at a rate of approximately 100 to 500 ml/min until the indicator parameters are within the parameter-specific range outlined in the low flow sampling standard operating procedure included in Attachment 2 and EGL-RRD Operational Memorandum No. 2, *Sampling and Analysis*. Actual purging rates will be dependent upon maintaining less than a few inches of drawdown in the well during sampling. Water levels in the wells will be measured during purging to ensure that stress on the aquifer is minimized.

4.3.3 Sample Collection and Handling

Groundwater samples will be collected upon acceptable stabilization of water quality parameters as described above in Section 4.3.2. The flow rate during sample collection will not exceed 500 ml/min. Chlorobenzene sample bottles will be collected first followed by Phenytoin. Purging and sampling of all wells will be completed using a peristaltic pump and dedicated polyethylene tubing. Purge water will be placed on the ground in the general vicinity of the well. Purging will continue until water quality parameters (i.e., pH, conductivity, turbidity, dissolved oxygen, temperature, and oxidation-reduction potential) stabilize for three consecutive readings. Stabilization parameter readings will be recorded on the Field Form provided in Attachment 1. After stabilization, groundwater samples will be collected for laboratory analysis.

Samples will be placed on ice in laboratory-provided sample coolers and delivered to ALS Laboratory in Holland, Michigan under standard chain-of-custody control.

5 Chain-of-Custody Procedures

A chain-of-custody procedure will be used to document the possession and the handling of individual samples from sample collection through receipt of samples by the laboratory. This procedure will include sample identification labels, field forms that contain field sampling observations and data, and chain-of-custody forms that include documentation of sample receipt and transportation. Samples will be hand delivered directly to the laboratory.

5.1 Sample Identification Labels

Each sample bottle collected will be identified with a label or tag. Each label will include the well identification at which the bottle was collected, the time and date that the sample was collected, the sampler's initials, the site name, and the preservative included in the sample container.

5.2 Field Forms

As each sample is collected, a well-specific ground water sampling form will be completed. The form will include information regarding the site, sampling personnel, well condition, weather, and sample bottles collected. The field form will also document the static water elevation and field measurements. Field technicians will note any adverse conditions and deviations from this sampling and analysis plan. The ground water sampling form may be revised periodically to aid in efficient data collection. An example ground water sampling form is included in Attachment 1.

5.3 Chain-of-Custody Form

A chain-of-custody (COC) form will be completed during each sampling event to document the custody of the samples. The COC form will include relevant sampling information, including the project name, sample identification, date and time of sample collection, sample container type, number, and preservative, and the analysis required for each sample.

The COC form will also document the actual chain of custody from the time the samples are collected until they are received by the laboratory. An example COC form is presented in Attachment 3.

6 Sample Analysis Procedures

6.1 Laboratory

ALS Laboratory has been selected to perform the analytical work under this GWMAP. Pfizer may elect to utilize alternate laboratories to perform analysis under this GWMAP. In the event another laboratory is utilized, notice will be provided to EGLE. Alternate laboratories will be required to meet the analytical requirements and detection limits described in section 6.2.

6.2 Analytical Methods

Groundwater samples will be analyzed for chlorobenzene using USEPA Method 8260 with a target detection limit of 1 ug/L. and for Phenytoin using USEPA Method 8270 with a target detection limit of 15 ug/L. The bottle and preservative type and holding times for these analytes are presented in Table 1.

The method, detection limit, and holding time are consistent with EGLE's March 2016 list of target detection limits and designated analytical methods.

7 Quality Assurance/Quality Control Programs (QA/QC)

7.1 Field QA/QC

During each sampling event, QA/QC samples will be collected as follows:

- *Duplicate* - To evaluate field precision, one duplicate sample will be collected during each sampling event. The duplicate sample will be collected immediately after the corresponding well sample is collected. The duplicate samples will be labeled as a duplicate. The ground water sampling form which coincides with the well in which the duplicate sample was collected, will contain a note that indicates the label descriptor of the sample.
- *Trip Blank* - During each sampling event, one trip blank will be included with sample bottles. Trip blanks will be analyzed for chlorobenzene using U.S. EPA Method 8260. When VOC sample bottles are prepared for shipment to the field, a set of VOC vials will be filled with organic-free deionized water and labeled "trip blank". The trip blank will be transported to the field and sent to the laboratory along with the other sample bottles to evaluate possible contamination from sample bottles, shipping methods, and sampling or laboratory environment.

7.2 Laboratory QA/QC

The analytical report for each monitoring event will include quality control data pertaining to the analyzed samples. If possible, sufficient groundwater will be collected during sampling to allow for quality control analyses to be performed on a sample from the site. In the event that site conditions do not allow for collection of sufficient sample, the laboratory will supply batch quality control data.

At a minimum, the laboratory analytical reports will include the following QA/QC information: the results of method blank, laboratory control, and matrix spike/matrix spike duplicate sample analysis. The laboratory reports will also include a reference to the method utilized and a description of the sample conditions upon receipt.

8 Data Evaluation and Reporting

An annual Groundwater Monitoring Report will be prepared and submitted to EGLE within 60 days of the completion of each monitoring event. The monitoring reports will include the following:

- A narrative of the sampling event, including a summary of the analytical data, QA/QC procedures, and any deviations from the GWMAP;
- data package, including QA/QC documentation and chains of custody;
- a tabular summary of static water level measurements and a figure depicting the potentiometric surface for the properties; and
- a tabular summary of analytical results with comparison to Part 201 generic GSI and mixing zone-based GSI criteria.

The GWMAP will be re-evaluated periodically to determine whether revisions to the monitoring scope (locations, frequency and/or parameters) are warranted based on observed conditions.

A set of prescribed endpoints to the GWMAP implementation based on presumed outcomes is described below. If either of the conditions described below are achieved in a well, then groundwater monitoring under this GWMAP will be terminated at that location.

- A minimum of eight consecutive monitoring events, inclusive of past monitoring results implemented under Revision 1 of the GWMAP with at least four additional consecutive annual monitoring events implemented under this Revision 2 of the GWMAP showing chlorobenzene and Phenytoin concentrations below generic GSI concentrations; or

- A statistical evaluation of groundwater quality data at the GSI monitoring wells shows compliance with generic GSI criteria based on a properly calculated and documented 95 percent upper confidence limit on the mean.

If the termination criteria are met at all of the wells, then the GWMAP will be completely terminated provided that there have been no upset conditions associated with the performance of the Hydraulic Containment System at the Plant Site in the preceding five years. EGLE will be notified in the annual monitoring reports when termination criteria have been achieved.

.

Figures

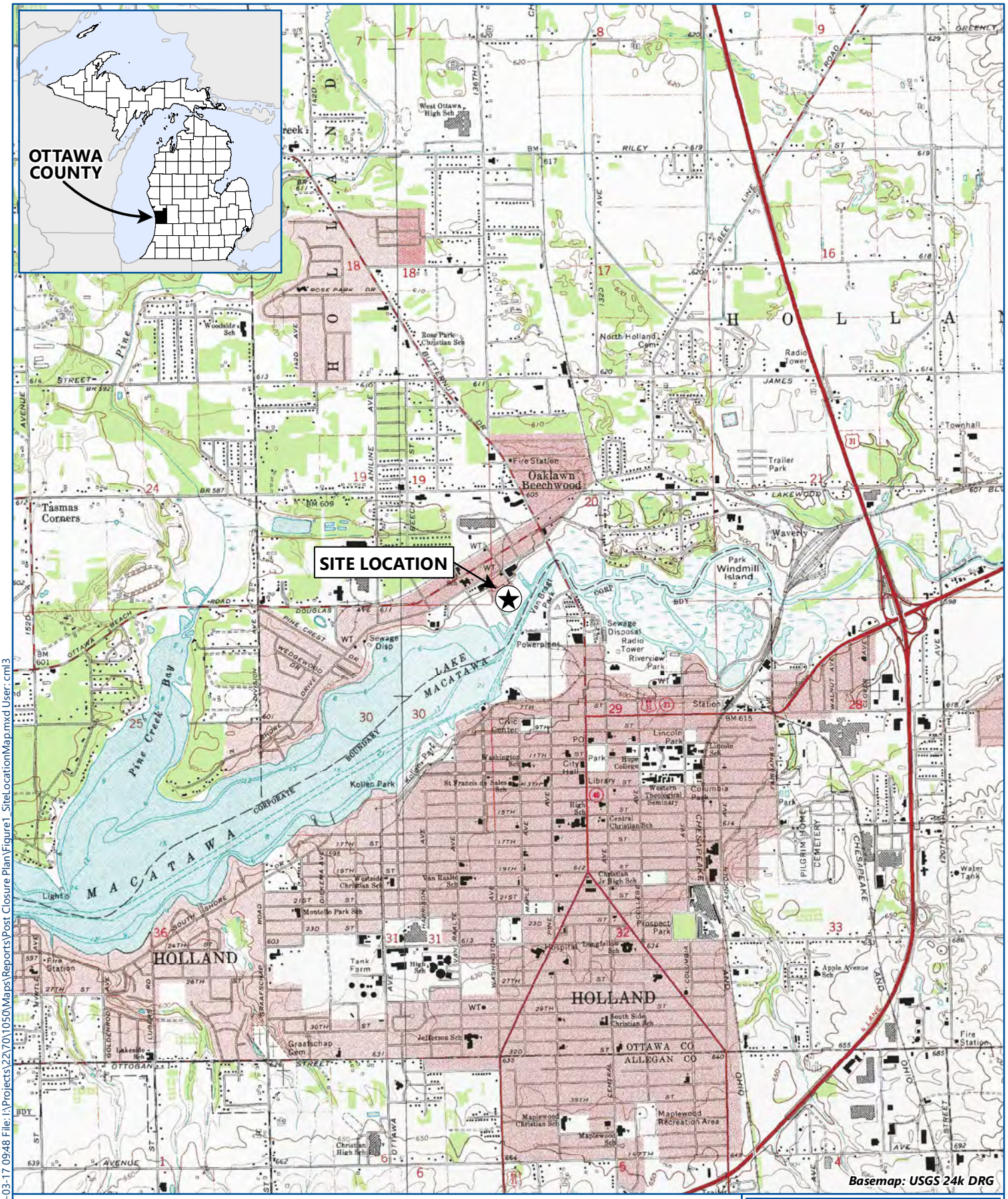

★ Site Location

N

0 3,000

Feet

BARR

SITE LOCATION MAP

WARNER-LAMBERT FORMER MANUFACTURING SITE

Holland, MI

FIGURE 1

Barr Footer: ArcGIS 10.8.1, 2022-03-17 09:48 File: I:\Projects\22\70\1050\Maps\Reports\Post Closure Plan\Figure1_SiteLocationMap.mxd User: cml3

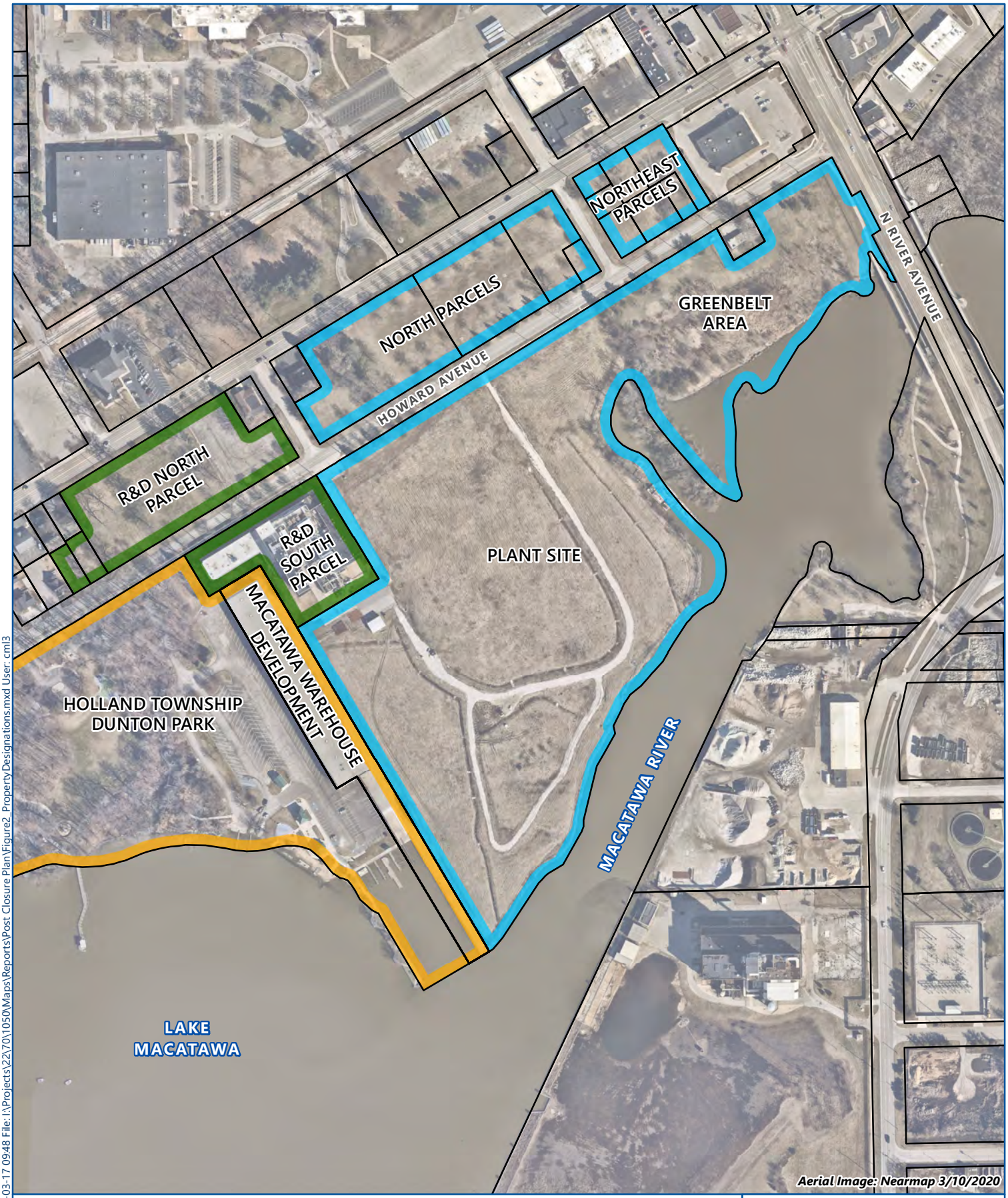

Parcel Boundary
MSU Property
Pfizer or Pfizer Subsidiary Property
Contiguous Properties

N

0 350
Feet

PROPERTY DESIGNATIONS
WARNER-LAMBERT FORMER MANUFACTURING SITE
Holland, MI

FIGURE 2

Barr Footer: ArcGIS 10.8.1, 2022-03-17 09:48 File: I:\Projects\22\70\1050\Maps\Reports\Post Closure Plan\Figure2_Property Designations.mxd User: cml3

Property Boundary
Hydraulic Containment Wall
Geomembrane Cap
Extraction Well Transmission Line
Deep Well Transmission Line
Drainage Swale
100-Year Floodplain Limit
Fence
Deep Well
Abandoned Deep Well
Extraction Well
Piezometer
Monitoring Well
GWTS Building Expansion

Notes:
Locations are bosed off of CAD drawing PFZ01161F07R-DEC2014.dwg (Figure 2-1, March 2015). Information contained in the drawings was georeferenced and scaled based on common locations visible on the aerial photograph. Locations should be considered approximate.

0 200
Feet

GROUNDWATER MONITORING LOCATIONS MWD AND DUNTON PARK
WARNER-LAMBERT FORMER MANUFACTURING SITE
Holland, MI
FIGURE 3

BARR

Barr Footer: ArcGIS 10.8.1, 2022-03-14 10:50 File: I:\Projects\23\70\1050\Maps\Reports\Post Closure Plan\Appendix - GWMP 2022 Revision\LargeFigure3_GWMonitoringLocations.mxd User: cml3

Table

Table 1
Parameters, Methods, Detection Limits, Sample Containers and Hold Times for Constituents of Concern

Volatile Organic Compound	***Analytical Method***	***Detection Limit (ug/L)***	***Bottle Type/Preservative***	***Hold Time***
Chlorobenzene	8260	1	40 ml glass vials, cool to 4° C,	14 days
Active Pharmaceutical Ingredient	***Analytical Method***	***Detection Limit (ug/L)***	***Bottle Type/Preservative***	***Hold Time***
5,5-Diphenylhydantoin (Phenytoin)	8270	15	1 Liter amber glass bottle, cool to 4° C	7 days for extraction 40 days for analysis

Attachment 1

Ground Water Sampling Form

BARR ENGINEERING
Low Flow Minimal Drawdown Groundwater Sampling Log

Site Name: _____ WELL ID: _____ DATE: _____

Project Number: _____ Sampler ID: _____

Site Location: _____ Depth to Water (ft. from T.O.C.): _____

START TIME: _____ Total Depth of Well (ft.): _____ Measured ? YES or NO

SAMPLE TIME: _____ Tubing Length (ft.): _____ Measured ? YES or NO

WEATHER: _____ Tubing Intake Depth (ft. from T.O.C.): _____

Water Quality Meter ID/Serial Number: _____ Tubing dedicated? YES or NO

Well Condition Notes: _____

Well material: _____ Diameter: _____ Lock? _____ Cap? _____

Type of pump/tubing: _____ Screen Length (ft.): _____

TIME	RATE	LEVEL	pH	COND	ORP	DO	TURB	TEMP
min	ml/min	feet	s.u.	mS/cm	mV	mg/L	NTUS	deg C
Every 3-5 minutes	< 500 ml/min.	<0.3 ft. drawdown	+/- 0.1 s.u.	+/-3%	+/-10 mV	10% or < 0.5 mg/L	10% or < 5 NTUS	+/-3%

Filtered? YES or NO Purge water disposal method: _____

Appearance of Sample: _____

Sample odor? (if yes, describe): _____

Analyses: _____

Comments (e.g., duplicates collected, drawdown notes, recovery rate, tubing intake relative to screen): _____

_____

Attachment 2

Standard Operating Procedures

STANDARD OPERATING PROCEDURE

For Low Flow Monitoring Well Purging

Revision 3.0

February 28, 2013

Approved By:	Dana Baker			02/28/2013
	Print	QA Manager(s)	Signature	Date
	Kim Johannessen			02/28/2013
	Print	Field Technician(s)	Signature	Date

Barr Engineering Company
4700 West 77th Street • Minneapolis, MN 55435-4803
Phone: 952-832-2600 • Fax: 952-832-2601 • www.barr.com

Minneapolis, MN • Hibbing, MN • Duluth, MN • Ann Arbor, MI • Jefferson City, MO• Bismarck, ND • Calgary, AB, Canada

Initials: _____	Date: _____
Initials: _____	Date: _____
Initials: _____	Date: _____
Initials: _____	Date: _____
Initials: _____	Date: _____

Standard Operating Procedures for Low-Flow Monitoring Well Purging

Purpose

The purpose of this SOP is to describe the procedure for purging low-flow groundwater wells.

Applicability

This SOP applies to environmental technicians who are responsible for purging low-flow groundwater wells.

Definitions

Drawdown- Lowering of the water level in a monitoring well due to water being evacuated (purged) faster than the groundwater recharge rate.

Low-Flow- A purge/flow rate which maximizes the potential for representative ground water samples.

Equipment

Calculator
Power source (batteries or generator)
Pump, controller and tubing
Water level indicator
Water quality meter (YSI 556 MPS and flow-through cell)

References

EPA. Groundwater Issue. *Low-Flow (Minimal Drawdown) Ground-water Sampling Procedures.* EPA, 1996
YSI 556 MPS Water Quality Meter Manual and SOP

Responsibilities

The environmental technician(s) is responsible for the proper well purging procedures; and documentation.

Procedures

Low-flow purging techniques will be used prior to sampling of a monitoring well. This low-flow purging SOP is based on the Low Flow Ground Water Sampling Procedures (EPA, 1996).

Low-flow purging may be completed using one of the following, depending on the well and the sampling requirements; an electric submersible pump, bladder pump, double-valve pump, or peristaltic pump. Refer to the Barr SOP for the operation of the pump selected for purging. Dedicated equipment should be installed when possible to minimize disturbance in the well. Portable sampling devices will be slowly and carefully lowered into the well to minimize disturbance. The intake port for the purging pump being used will be placed at a depth such that the intake is at or slightly above the middle of the screened interval. High-flow rate pumps will be used in wells with high production capacity, and low-flow rate

pumps will be used in wells with low production capacity, in order to minimize the drawdown during purging.

Pumping rates during low-flow purging will be kept below 0.5 liters per minute, and will be adjusted to minimize drawdown during purging. An electronic water level indicator will be used to determine that a minimal amount of drawdown is occurring within the well, ideally to less than 0.1 meter. Flow rate will be measured using a graduated container and a watch/clock. During the first purge/sampling event, a purge rate will be established for each monitoring well. Pump powering equipment that generates air emissions will be kept downwind of the well being sampled.

Monitoring well purging will be considered complete when field analytical parameters: pH, Eh, conductivity, dissolved oxygen, and turbidity have reached stabilization. Temperature will also be measured and recorded, but not used to determine stability. Field analytical parameters, aside from turbidity, will be measured utilizing in-line flow-through cell equipment. Record initial stabilization readings and subsequent readings will be taken at 3 to 5-minute intervals for dedicated installations, and 5-15 minutes for portable equipment. Three successive readings should be within ± 0.1 for pH, ± 5% for conductivity, ± 20 mV for redox potential, and ± 10% for turbidity and dissolved oxygen. Dissolved oxygen and turbidity usually require the longest time for stabilization. The above stabilization guidelines are provided for rough estimates based on experience.

All equipment will be calibrated prior to purging of wells. Field measurements will be recorded on the Field Log Data Sheet, or a project field log book. Calibration records will be kept on either the Meter Calibration Summary Form, or in a project field log book. Refer to either the YSI 556 MPS manual or the Barr YSI 556 MPS Water Quality Monitoring System SOP for proper calibration of the meter.

Documentation

The Environmental Technician is responsible for recording all information regarding low flow purging on the following forms:

- Calibration parameters are recorded daily (minimum) on the Meter Calibration Summary Form.
- Equipment utilized, well information, field parameters, water level drawdown, purge rates and time, purge volumes, and similar information are recorded on the Field Log Data Sheet.

Attachments

Attachment 1: Field Log Data Sheet
Attachment 2: Meter Calibration Summary Form

Attachment 1
Field Log Data Sheet

BARR

Barr Engineering Company
Field Log Data Sheet

Client:	**Monitoring Point:**
Location:	**Date:**
Project #:	**Sample Time:**

GENERAL DATA		STABILIZATION TEST						
Barr lock:								
Casing diameter:		Time/ Volume	Temp. °C	Cond. @ 25	pH	Eh	D.O.	Turbidity Appearance
Total well depth:*								
Static water level:*								
Water depth:*								
Well volume: (gal)								
Purge method:								
Sample method:								
Start time:		Odor:						
Stop time:		Purge Appearance:						
Duration: (minutes)		Sample Appearance:						
Rate, gpm:		Comments:						
Volume, purged:								
Duplicate collected?								
Sample collection by:		CO2-	Mn2-	Fe(T)-	Fe2-			

Others present:

WELL INSPECTION (answer for each category, state if lock replaced, detail any repairs needed on back of form)

CASING & CAP: COLLAR: LOCK: OTHER:

MW: groundwater monitoring well WS: water supply well SW: surface water SE: sediment other:

VOC- semi-volatile- general- nutrient- cyanide- DRO- Sulfide-

oil,grease- bacteria- total metal- filtered metal- methane- filter-

Others:

*Measurements are referenced from top of riser pipe, unless otherwise indicated.

S:\DM\Templates\FieldLogDataSheet.doc

Attachment 2
Meter Calibration Summary Form

MCS-1

BARR ENGINEERING COMPANY
METER CALIBRATION SUMMARY

PROJECT _____

TECHNICIAN _____

Meter type and number	Date	Time	Temperature C	Standard Used	Meter Reading	Slope	Conductivity Redline
Conductivity	Date	Solution Used	Cell Result				
Cell Check							
ORP Probe	Date	Temp.	ORP Reading	Calculation Result			
Check							
231+,- 10mV @ 25C							
231mV = Display Value + [(Display Temp. - 25 C) x (1.3 mV)]							

WEATHER CONDITIONS

Date	Wind Direction	Wind Speed	Temperature F	Cloud Cover	Comments

Comments: _____

Attachment 3

Chain-of-Custody Form

☐ ALS Environmental
10450 Stancliff Rd., Suite 210
Houston, Texas 77099
Tel. +1 281 530 5656
Fax. +1 281 530 5887

Chain of Custody Form

Page _____ of _____

COC ID: 10075

☐ ALS Environmental
3352 128th Ave.
Holland, MI 49424-9263
Tel: +1 616 399 6070
Fax: +1 616 399 6185

ALS Project Manager:		ALS Work Order #:	

Customer Information		Project Information		Parameter/Method Request for Analysis	
Purchase Order		Project Name		A	
Work Order		Project Number		B	
Company Name	Horizon Environmental	Bill To Company	Horizon Environmental	C	
Send Report To		Invoice Attn	Accounts Payable	D	
Address	4771 50th Street	Address	4771 50th Street	E	
				F	
City/State/Zip	Grand Rapids, MI 49512	City/State/Zip	Grand Rapids, MI 49512	G	
Phone	(616) 554-3210	Phone	(616) 554-3210	H	
Fax	(616) 554-3211	Fax	(616) 554-3211	I	
e-Mail Address		e-Mail Address		J	

No.	Sample Description	Date	Time	Matrix	Pres.	# Bottles	A	B	C	D	E	F	G	H	I	J	Hold
1																	
2																	
3																	
4																	
5																	
6																	
7																	
8																	
9																	
10																	

Sampler(s) Please Print & Sign	Shipment Method	Required Turnaround Time: (Check Box)	Results Due Date:

Relinquished by:	Date:	Time:	Received by:	Notes:		
Relinquished by:	Date:	Time:	Received by (Laboratory):	Cooler ID	Cooler Temp.	QC Package: (Check One Box Below)
Logged by (Laboratory):	Date:	Time:	Checked by (Laboratory):			

Preservative Key: 1-HCl 2-HNO_3 3-H_2SO_4 4-NaOH 5-$Na_2S_2O_3$ 6-$NaHSO_4$ 7-Other 8-4°C 9-5035

Note:
1. Any changes must be made in writing once samples and COC Form have been submitted to ALS Environmental.
2. Unless otherwise agreed in a formal contract, services provided by ALS Environmental are expressly limited to the terms and conditions stated on the reverse.
3. The Chain of Custody is a legal document. All information must be completed accurately.

Copyright 2010 by ALS Environmental.

Appendix M

Hydraulic Containment System-Operation & Maintenance Manual (Alternate GWTS)

Groundwater Water Treatment System

Operation and Maintenance Manual

Prepared for

Pfizer

Revision History

Revision	By	Date	Description
A	LEH	4/21/2022	Original issue

Certifications

Document Owner:
_____

3033 Orchard Vista Drive SE, Suite 200
Grand Rapids, MI 49546
616.512.7000
www.barr.com

Contents

1 Introduction 1
1.1 Site History 1
1.2 Regulatory Framework 1
1.3 Nature and Extent of Groundwater Contamination 1
1.4 Description of Site Remedy 1
1.5 Purpose and Scope of Pretreatment Operations 2
1.6 Health and Safety Requirements 2
2 Publicly Owned Treatment Works (BPW) Discharge Permit Requirements 3
2.1 General Permit Requirements 3
2.2 Numerical Permit Limits 3
2.3 Monitoring Requirements 3
2.4 Reporting Requirements 4
3 Description of Groundwater Extraction and Pretreatment Operations & Maintenance 6
3.1 Extraction Wells 6
3.2 Pretreatment Process Equipment 6
3.2.1 Raw Water Tank 7
3.2.2 Rapid Mix Tank 7
3.2.3 Process Clarifier 8
3.2.4 Clarifier Overflow Tank 9
3.2.5 Multi-media Pressure Filter Skid 9
3.2.6 Granular Activated Carbon (GAC) Pressure Vessel Skid 10
3.2.7 Treated Water Tank 11
3.2.8 Backwash Supply Tank 11
3.2.9 Backwash Holding Tank 12
3.2.10 Backwash Clarifier 13
3.2.11 Sludge Holding Tank 13
3.2.12 Filter press 14
3.2.13 Process Pumps 14
3.2.14 Chemical injection Systems 16
3.3 Instrumentation and Controls 17

3.3.1 Control Valves 17
3.3.2 Flow Control Valves 18
3.3.3 Flow meters 18
3.3.4 pH probes 19
3.3.5 Level Indicators 20
3.3.6 Pressure Indicators 20
3.3.7 Differential Pressure Indicators 21
3.3.8 Pressure switches 22
3.4 Ancillary Equipment 22
3.5 Interface with Existing Deep Well Injection 23
3.6 Shutdown Sequence 23
4 Management of Change 24
4.1 Procedures 24
4.2 Documentation Requirements 24

List of Tables

Table 1-1 Treatment System Element Purpose 2
Table 2-1 Pretreatment Permit Limits 3
Table 2-2 Routine Reporting Requirements to BPW 4
Table 3-1 Summary of maintenance requirements by process equipment type 6
Table 3-2 Process Pumps and Interlocks 14
Table 3-3 Instrumentation and Controls Systems Maintenance Activities 17
Table 3-4 Control Valves Operations Summary 18
Table 3-5 Flow Control Valves Operations Summary 18
Table 3-6 Flow Meters Operations Summary 19
Table 3-7 pH Indicators Operations Summary 19
Table 3-8 Level Indicators Operations Summary 20
Table 3-9 Pressure Indicators Operations Summary 21
Table 3-10 Differential Pressure Indicators Operations Summary 22

List of Attachments

Attachment A: Specific Equipment and Instrumentation Identification, Operation and Maintenance Requirements **(Not available until after construction)**

Attachment B: Engineering Plans and Specifications **(Previously submitted to EGLE in April 2021)**

Attachment C: Manufacturers' Equipment and Instrument Manuals (**Not available until after construction)**

Attachment D: Process Control Documentation (**Not available until after construction)**

Attachment E: Groundwater Extraction Well Logs

Attachment F: Management of Change Documentation

Attachment G: Holland BPW Wastewater Discharge Permit

Abbreviations

BPW	Board of Public Works
GAC	granular activated carbon
GWTS	Groundwater treatment system (GWTS)
HCS	hydraulic containment system
HDPE	high-density polyethylene
EGLE	Michigan Department of Great Lakes and the Environment
MSU	Michigan State University
POTW	publicly owned treatment works
PPE	personal protective equipment
UIC	Underground Injection Control
VOC	volatile organic constituent

1 Introduction

This document describes the operation, maintenance, and monitoring of a groundwater treatment system (GWTS) at the Warner-Lambert Company's former manufacturing site in Holland, Michigan (the site).

1.1 Site History

The site is located at 188 Howard Avenue in Holland Charter Township, Ottawa County, Michigan. It was used to manufacture a wide array of final and intermediate pharmaceuticals between 1950 and 2007. Buildings and structures associated with pharmaceutical manufacturing operations were removed between 2007 and 2009, except for a research and development (R&D) facility. This facility, located in the northwestern corner, was separated from the plant site and donated to Michigan State University (MSU). It remains in use today.

Groundwater at the site is extracted as part of a hydraulic containment remedy installed in 2010. The hydraulic containment system (HCS) was implemented to prevent venting of site groundwater to the adjacent Macatawa River. The extracted groundwater is disposed of through two deep injection wells (permitted through federal Underground Injection Control [UIC] regulations) or the publicly owned treatment works (POTW) of the Holland Board of Public Works (BPW).

1.2 Regulatory Framework

The GWTS was implemented according to the facility's corrective action obligations under Part 111 ("Hazardous Waste Management") of 1994 Michigan PA 451, as amended (Part 111 of Act 451) and in conjunction with appropriate discharge permitting and associated regulations established under Part 31 of Act 451.

Discharge of pre-treated water to the Holland POTW is conducted following Permit No. HT-2021-WLC-24 issued by the Holland BPW.

1.3 Groundwater Constituents of Concern

The distribution of chemical constituents in soil and groundwater at the site has been determined through numerous investigative phases. These investigations indicate that chemical constituents in soil and groundwater are distributed in a complex and heterogeneous manner due to greater than 100 years of historical industrial activity at the site (Horizon Environmental, Final Remedial Action Plan/Corrective Measures Implementation Plan, 2014). Volatile organic constituents (VOCs), including chlorobenzene and benzene, are the primary constituents of concern in site groundwater.

1.4 Description of Site Remedy

The HCS remedy consists of a subsurface groundwater flow barrier and surface cap and a groundwater extraction, treatment, and injection system. Groundwater is (1) extracted from wells within the groundwater flow barrier, (2) treated via filtration in Building 91 to remove suspended solids, (3) injected

into one of two on-site deep wells or treated via the GWTS described in this document, and (4) discharged to the Holland BPW.

The GWTS described in this manual provides a groundwater disposal alternative to deep injection wells. With this system, water is managed through on-site pretreatment and discharged to the Holland BPW POTW. The GWTS supplements the existing deep wells, with the option to dispose of extracted groundwater through either method.

1.5 Purpose and Scope of Pretreatment Operations

Groundwater continues to be extracted from the site using the existing shallow extraction wells. Table 1-1 summarizes components of the GWTS.

Table 1-1 Treatment System Element Purpose

Element	Purpose
Raw water storage tanks	Equalize flow from the shallow extraction wells
Rapid mix tank	Increase dissolved oxygen and mix caustic to increase pH
Flocculation/Clarifier tank	Form large particles and separate solids from water
Sludge holding tank	Store sludge from the clarifier
Filter press	Dewater sludge for solids landfill disposal
Clarifier overflow tank	Equalize flow to be pumped into the GAC vessels
Multi-media pressure vessel	Remove particulates
Granulated activated carbon (GAC) vessels	Removal of organic constituents

1.6 Health and Safety Requirements

A "No-Dig Area" on the former site is in effect. Excavation and construction activities below the high-density polyethylene (HDPE) liner are prohibited in the No-Dig Area without prior approval from the Michigan Department of Great Lakes and the Environment (EGLE), formerly the Michigan Department of Environmental Quality. GWTS construction and start-up activities will be conducted following EGLE regulations. Contact your health and safety staff for rules, regulations, training requirements, documentation requirements, and other details before any planned digging.

GWTS operation will include the following health and safety precautions:

- Per the 29 CFR 1910.120, operators will have 40 hours of training with up-to-date annual refreshers.
- Follow 29 CFR 1910.120 for information regarding federal health and safety requirements applicable to hazardous waste sites
- Appropriate personal protective equipment (PPE) will be worn for the specific job and may include steel-toed boots, nitrile gloves, safety glasses, and splash shields.
- Do not conduct any work that would excavate or otherwise impair the HPDE geomembrane liner.

2 Publicly Owned Treatment Works (BPW) Discharge Permit Requirements

2.1 General Permit Requirements

The BPW discharge permit regulates the discharge of water extracted from the HCS and treated through the GWTS. This section summarizes specified discharge requirements. For additional details, see the full permit included in Attachment G.

2.2 Numerical Permit Limits

Table 2-1 summarizes pretreatment permit limits for the Holland BPW discharge permit.

Table 2-1 Pretreatment Permit Limits

Discharge Parameter	Daily Minimum Concentration	Daily Maximum Concentration	Daily Maximum Loading	Sample Frequency	Sample Type
Chemical Oxygen Demand (COD)	--	2,000 mg/L	80 lbs/day	n/a	Composite
Total Suspended Solids (TSS)	--	1,400 mg/L	100 lbs/day	n/a	Composite
Total Phosphorus (P)	--	40 mg/L	1 lb/day	n/a	Composite
Grease and Oil (G&O)	--	150 mg/L	5 lbs/day	n/a	Composite
pH	6.0 S.U.	11.0 S.U.	--	n/a	Grab
Benzene	--	0.16 mg/L	--	One sample/ month	Grab
Chlorobenzene	--	1.7 mg/L	--	One sample/ month	Grab
Perfluorooctanoic acid (PFOA)	--	12,000 ppt	--	One sample/ month	Grab
Perfluorooctane sulfonic acid (PFOS)	--	12 ppt	--	One sample/ month	Grab

2.3 Monitoring Requirements

Specific monitoring requirements from the permit are summarized below:

- All samples shall be collected from the designated monitoring point location
- Grab samples: single sample taken at neither a set time nor flow
- Composite samples: a 24-hour composite sample with the sample volume proportional to the discharge flow

- For each sample or measurement taken at the monitoring point, the following information must be recorded:
    - Place, date, time, and method of sampling
    - Name of person taking the sample
    - Date analyses were performed
    - Person(s) who performed the analysis
    - Analytical techniques or methods used
    - Results

In addition to sampling to be completed by Pfizer, composite discharge monitoring samples will periodically be collected by the Holland BPW and Holland Charter Township, which operates the sanitary sewer system at the point of discharge. The sampling manhole near the property boundary was designed to facilitate easy flow readouts and the ability to store a composite sampler and connect it to the flow meter for flow-weighted composite sampling. Both entities will be provided with access to this manhole as well as the flow readout located inside. Operators can also collect confirmatory samples as needed from the same location or inside the GWTS building.

2.4 Reporting Requirements

Table 2-2 summarizes routing reporting requirements.

Table 2-2 Routine Reporting Requirements to BPW

Requirement	Frequency/Duration	Due Dates
Slug Control/Spill Prevention Plan	Initially and review every two years and/or upon any substantial change in operation	Initially and every two years after
Toxic Organic Management Plan (TOMP) Certification Statement	once / six months	January 15 and July 15
Continuing Compliance Report	once / six months	January 15 and July 15
Discharge Monitoring Report (DMR)	once / month	On of before 6th of the month for the prior month
Operation and maintenance records	Retain for at least 3 years	N/A
Retain monitoring, sampling, and chemical analysis records	Retain for at least 3 years	N/A

Additional reporting requirements include:

- All reports shall be signed by a principal executive officer or designee

- Notify BPW in the event of:
    - Notification of Discharge Violation (NOV)
    - Upset or unanticipated bypass
        - Notify the BPW within 24 hours of the first awareness. See Attachment G for the full requirement.
    - A significant change in discharge
    - Hazardous waste discharge

3 Description of Groundwater Extraction and Pretreatment Operations & Maintenance

3.1 Extraction Wells

A series of five groundwater extraction wells are spaced around the southern perimeter of the facility. Each well is equipped with a submersible pump and a calibrated level transmitter to provide groundwater elevation information to the PLC. The level signal is used to ensure that the wells do not have excessive drawdown that could damage the pump. To prevent freezing, the extraction well pumps are connected to the forcemain below ground by means of a pitless adaptor assembly. The extraction well logs are provided as Attachment E. Groundwater from each of the extraction wells is conveyed to Building 91 by a dedicated buried forcemain. Inside Building 91, each forcemain is equipped with a flow indicating transmitter and an automatic flow control valve to indicate and regulate flow.

3.2 Pretreatment Process Equipment

Operators should conduct maintenance activities with appropriate PPE. At start-up, operators should check that manual values on the input and output lines to the tank, vessel, or pump are in their normal operating position. At shutdown, operators should check that manual values on the input and output lines to the tank, vessel, or pump are in their closed position to isolate the piece of equipment.

Table 3-1 Summary of maintenance requirements by process equipment type

Equipment	Maintenance Item	Frequency	Description
Tanks and vessels	Visual inspection	Annual	Visually interior, outside tank walls and foundation
	Solids removal and cleaning	Based on visual inspection	Drain, clean, and remove solids that are present in sufficient quantities to impact tank functionality.
	Integrity inspection	Based on visual inspection	Further assess condition for corrosion, leaks, cracks, damage, pitting, etc.
	Ventilation inspection	Annually or less	Visually inspect the ventilation on the tank for obstructions or structural damage.
Agitators	Agitator gearbox and motor preventative maintenance	As noted in Attachment A	The gearbox and motor should be maintained and have parts replaced according to the schedules in Attachment A
GAC vessels	Carbon changeout	Based on monitoring results	Replace the carbon in the GAC vessel.
Pumps	Bearing and motor preventative maintenance	As noted in Attachment A	The bearings and motor should be maintained and have parts replaced according to the schedules in Attachment A
Process Piping	Line inspection	As dictated by pressure drop	Isolate, drain, and inspect lines
Process Piping	Line cleaning	Based on line inspection	Flush, jet or mechanically clean process lines to restore service

For a list of operator adjustable set points by equipment type, see Attachment A.

3.2.1 Raw Water Tank

The raw water tank stores incoming water from the existing groundwater extraction system and supplies water to downstream pretreatment processes. The raw water tank receives water from the extraction wells through the well water supply header during normal operation. Water is pumped out of the raw water tank by a pump that directs water to the rapid mix tank. The water level in the tank is measured and controlled by a level transmitter, an operator adjustable setpoint, and a downstream flow control valve. The headspace of the raw water tank is passively vented outside the treatment building.

The raw water tank has the following inputs:

- The well water supply header
- The treated water recycle

The raw water tank has the following outputs:

- Rapid mix tank
- Overflow to floor trench
- Drain to floor trench

For equipment-specific operation and maintenance manuals, see Attachment C. The raw water tank has the following equipment and instrumentation associated with it:

- Rapid mix feed pump
- Flow control valve
- Raw water tank level transmitter

3.2.2 Rapid Mix Tank

Water is pumped from the raw water tank to the rapid mix tank. Water is pumped out of rapid-mix tank by a pump that directs water to the process clarifier. The water level in the tank is measured and controlled by a level transmitter, operator adjustable setpoints, and downstream flow control valve and pump. A caustic is used to raise the pH to facilitate iron oxidation. Caustic is fed into the process line between the raw water tank and the rapid mix tank by a positive-displacement chemical feed pump.

The caustic pumping rate is controlled by the pH probe and flow meter between the raw water tank and the rapid mix tank to achieve an operator-designated pH. If the pH is above a certain pH, the pumping rate will be controlled by the pH probe downstream of the rapid mix tank until the pH falls below the setpoint. See Attachment A for full details.

The rapid mix tank is equipped with a mechanical agitator to increase dissolved oxygen in the water. This facilitates the oxidation of iron and volatilization of VOC compounds. The rapid mix tank has an active ventilation system to remove liberated odors and compounds from the headspace above the tank.

The rapid mix tank has the following inputs:

- Raw water tank
- Building sump

The rapid mix tank has the following outputs:

- Process clarifier
- Overflow to floor trench
- Drain to floor trench
- Grab sample line for process sampling at the tank ahead of the upstream pH probe and after the downstream pH probe

For equipment-specific operation and maintenance manuals, see Attachment C. The rapid mix tank has the following equipment and instrumentation associated with it:

- Rapid mix agitator
- Rapid mix feed pump
- Process clarifier feed pump
- Flow control valve
- Exhaust fan
- Rapid mix level transmitter
- pH probes (upstream and downstream)
- Caustic metering pump (downstream)
- Coagulant metering pump (downstream)

3.2.3 Process Clarifier

The process clarifier settles particles in process water from the rapid mix tank, provides clarified effluent to the clarifier overflow tank and provides underflow to the sludge holding tank. The process clarifier also has a sludge recycle pump to return sludge to the unit. The process clarifier is equipped with a mechanical agitator to facilitate flocculation.

Coagulant is fed into the process line between the rapid mix tank and the process clarifier by a positive-displacement chemical feed pump. Flocculant fed to the clarifier by a positive-displacement chemical feed pump.

The process clarifier has the following inputs:

- Coagulant (upstream)
- Polymer flocculant
- Flow from the rapid mix tank
- Sludge recycle line
- Pressure relief on sludge line

The process clarifier has the following outputs:

- Gravity overflow to the clarifier overflow tank
- Underflow to the sludge holding tank
- Grab sample line for process sampling

For equipment-specific operation and maintenance manuals, see Attachment C. The process clarifier has the following equipment and instrumentation associated with it:

- Agitator
- Process clarifier feed pump
- Process clarifier flow control valve
- Process clarifier sludge pump
    - Grab sample line for sludge sampling is located on the pipe between the sludge pump and sludge holding tank
- Process clarifier sludge control valve
- Service water flush control valve

3.2.4 Clarifier Overflow Tank

The clarifier overflow tank holds treated clarifier effluent, which is fed into the tank by gravity during normal operation. A pump pumps water out of the clarifier overflow tank to the multi-media pressure filter.

The clarifier overflow tank has the following inputs:

- Process clarifier effluent
- Upstream pump return

The clarifier overflow tank has the following outputs:

- Multi-media pressure filter
- Overflow to floor trench
- Drain to floor trench
- Grab sample line for process sampling

For equipment-specific operation and maintenance manuals, see Attachment C. The rapid mix tank has the following equipment and instrumentation associated with it:

- Multi-media pressure filter feed pump
- Clarifier overflow tank level transmitter

3.2.5 Multi-media Pressure Filter Skid

The multi-media pressure filter feed pump directs water through the multi-media pressure filter and then to the GAC vessels. The multi-media pressure filter (MMPF) skid has a single vessel that contains filtration

media. The multi-media pressure filter receives process water from the clarifier overflow tank and removes constituents from the process water before it is directed to the GAC vessels.

Backwash operation of the multi-media pressure filter is initiated by the following:

- An operator-adjustable high differential pressure setpoints across the multi-media pressure filter
- An operator adjustable setpoint for maximum time between backwashes and an adjustable setpoint for the length of backwash for the multi-media pressure filter

During backwash operation, the multi-media pressure filter feed pump is shut off, and water is routed from the backwash supply tank to the multi-media pressure filter and into the backwash holding tank.

The multi-media pressure filter skid has the following inputs:

- Water from the clarifier overflow tank
- Backwash water from the backwash supply tank

The multi-media pressure filter skid has the following outputs:

- Water to the GAC vessels
- Backwash line to the backwash holding tank
- Grab sample line for process sampling after the vessel

3.2.6 Granular Activated Carbon (GAC) Pressure Vessel Skid

The GAC pressure vessel skid has two vessels that contain GAC. The GAC vessels receive process water from the multi-media pressure filter and remove constituents from the process water before it is directed to the treated water tank.

The GAC pressure vessel skid can direct flow in series, parallel, duty-standby, forward, or reverse with either vessel in the lead position. Process flow from the GAC vessels can also be routed around the treated water tank and sent straight to the composite sampler and the POTW by a manual valve.

Backwash operation on the GAC vessels is initiated by the following:

- An operator-adjustable high differential pressure setpoints across the GAC vessels.
- An operator adjustable setpoint for maximum time between backwashes and an adjustable setpoint for the length of backwash for each GAC vessel

During backwash operation, the multi-media pressure filter feed pump is shut off, and water is routed from the backwash supply tank to the GAC vessels and into the backwash holding tank.

The GAC pressure vessel skid has the following inputs:

- Multi-media pressure filter
- Backwash water from the backwash supply tank

The GAC pressure vessel skid has the following outputs:

- Process flow line to the treated water tank
- Backwash line to the backwash holding tank
- Grab sample line for process sampling after each GAC vessel

3.2.7 Treated Water Tank

The treated water tank holds water from the GAC vessels and backwash clarifier effluent. The treated water tank receives water from the GAC vessels during normal operation. When the system is backwashing, the GAC effluent temporarily stops, and the backwash clarifier effluent gravity flows into the treated water tank.

A pump pumps water out of the treated water tank to the discharge point. A composite sampler is located along this pipe to pull samples from the effluent.

The treated water tank has the following inputs:

- GAC vessel effluent
- Backwash clarifier effluent
- Upstream pump return

The treated water tank has the following outputs:

- Treated water discharge point via discharge pump
- Overflow to floor trench
- Drain to floor trench
- Grab sample line for process sampling

For equipment-specific operation and maintenance manuals, see Attachment C. The treated water tank has the following equipment and instrumentation associated with it:

- Treated water discharge pump
- Treated water tank level transmitter

3.2.8 Backwash Supply Tank

The backwash supply tank provides potable water storage for the backwash process. Water is pumped out of the backwash supply tank by a pump that directs water to either the multi-media pressure filter or GAC vessels during a backwash sequence.

A reducing agent is used to dechlorinate potable water for the backwash process. The reducing agent is proportionally fed into the backwash line downstream of the backwash supply tank by a positive-displacement chemical feed pump.

The backwash supply tank has the following inputs:

- Potable water line header
- Reducing agent chemical feed (downstream)

The backwash supply tank has the following outputs:

- Backwash flow line to the multi-media pressure filter and the GAC vessels
- Overflow to floor trench
- Drain to floor trench

For equipment-specific operation and maintenance manuals, see Attachment C. The backwash water tank has the following equipment and instrumentation associated with it:

- Backwash supply pump
- Backwash supply tank level transmitter

3.2.9 Backwash Holding Tank

The backwash holding tank stores backwash water from the GAC vessels and the multi-media pressure vessel from a backwash sequence and supplies water to the backwash clarifier. A pump pumps water out of the backwash holding tank to the backwash clarifier. The backwash tank is equipped with a mechanical agitator to keep solids from settling.

The backwash holding tank has the following inputs:

- Backwash from the GAC vessels
- Backwash from the multi-media pressure filter
- Building Sump 1

The backwash holding tank has the following outputs:

- Backwash flow line to the backwash clarifier
- Overflow to floor trench
- Drain to floor trench
- Grab sample line for process sampling

For equipment-specific operation and maintenance manuals, see Attachment C. The backwash water tank has the following equipment and instrumentation associated with it:

- Backwash clarifier feed pump
- Backwash holding tank agitator
- Backwash holding tank level transmitter

3.2.10 Backwash Clarifier

The backwash clarifier settles particles in the backwash water from the GAC vessels, and the multi-media pressure filter provides clarified effluent to the treated water tank by gravity and underflow is pumped to the sludge holding tank.

The backwash clarifier has the following inputs:

- Backwash flow line from the backwash holding tank
- Pressure relief on sludge line

The process clarifier has the following outputs:

- Gravity overflow to the treated water tank
- Underflow to the sludge holding tank
    - Grab sample line for sludge sampling is located on the pipe between the sludge pump and sludge holding tank
- Grab sample line for process sampling

For equipment-specific operation and maintenance manuals, see Attachment C. The process clarifier has the following equipment and instrumentation associated with it:

- Agitator
- Backwash clarifier feed pump
- Backwash clarifier sludge pump
    - Grab sample line for sludge sampling is located on the pipe between the sludge pump and sludge holding tank
- Backwash clarifier sludge control valve
- Service water flush control valve

3.2.11 Sludge Holding Tank

The sludge holding tank receives underflow from the process and backwash clarifiers. Solids are pumped to the filter press. The sludge holding tank is equipped with a mechanical agitator.

The sludge holding tank has the following inputs:

- Underflow from the process clarifier
- Underflow from the backwash clarifier
- Upstream pressure relief return

The sludge holding tank has the following outputs:

- Thickened solids flow to the filter press
- Overflow to floor trench
- Drain to floor trench

- Grab sample line for process sampling

For equipment-specific operation and maintenance manuals, see Attachment C. The backwash water tank has the following equipment and instrumentation associated with it:

- Backwash clarifier sludge pump
- Process clarifier sludge pump
- Agitator
- Sludge holding tank level transmitter

3.2.12 Filter press

The filter press dewaters thickened solids from the sludge holding tank. The filter press feed pump is hand-operated and used to remove the sludge volume from the sludge tank on a regular as-needed basis to fill the filter press. After the filter press finishes a run, the plates are opened, and the solids are emptied into a dumpster. This dumpster should be emptied on a regular basis as needed. The polymer dose should be adjusted to ensure the solids do not contain liquid and can pass a paint filter test as required by the waste hauler.

The filter press has the following inputs:

- Thickened solids from the sludge holding tank

The filter press has the following outputs:

- Filtrate to building sump to the rapid-mix tank
- Dewatered solids to the dumpster cart

3.2.13 Process Pumps

Operation and Maintenance Requirements

Table 3-2 describes the process pumps and associated interlocks in the system.

Table 3-2 – Process Pumps and Interlocks

Pump Name	Type	Description	Interlocks
Rapid mix tank feed pump	Centrifugal	Pumps from the raw water tank to the rapid-mix tank	Raw water tank level Downstream high-pressure switch Flow control valve
Process clarifier feed pump	Centrifugal	Pumps from the rapid mix tank to the process clarifier	Rapid mix tank level Downstream high-pressure switch Flow control valve Control valve on service water flush line
Multi-media pressure filter feed pump	Centrifugal	Pumps from the clarifier overflow tank to the multi-media pressure vessel and GAC vessels	Clarifier overflow tank level Downstream high-pressure switch
Backwash clarifier feed pump	Centrifugal	Between the backwash holding tank and the backwash clarifier	Backwash holding tank level Downstream high-pressure switch
Treated water discharge pump	Centrifugal	Between the treated water tank and the system discharge to the POTW	Treated water tank level Downstream high-pressure switch
Backwash supply pump	Centrifugal	Between the backwash supply tank and the MMPF and GAC vessels	Backwash supply tank level Backwash holding tank level Downstream high-pressure switch Differential pressure switches on multi-media pressure filter and GAC skids
Process clarifier sludge bleed pump	Positive Displacement	Between the underflow of the process clarifier and the sludge holding tank	Sludge holding tank level Control valve on sludge line Control valve on sludge service water flush line
Backwash clarifier sludge bleed pump	Positive Displacement	Between the underflow of the backwash clarifier and the sludge holding tank	Sludge holding tank level Control valve on sludge line Control valve on sludge service water flush line
Filter press feed pump	Positive Displacement	Between the sludge holding tank and the filter press	Control valve on sludge line Control valve on sludge service water flush line Sludge holding tank level
Process clarifier sludge recycle pump	Positive Displacement	On the process clarifier	None
Building sump 1	Submersible	Building washdown to the backwash holding tank	Sump pump float switch
Building sump 2	Submersible	Filter press to the rapid-mix tank	Sump pump float switch
Caustic feed pump	Positive Displacement	From the caustic container to the pipe upstream of the rapid mix tank	Rapid Mix Tank Feed pH Probe Process Clarifier Feed pH Probe Process flow meter
Coagulant feed pump	Positive Displacement	From the chemical container to the pipe upstream of the process clarifier	Process flow meter
Reducing agent feed pump	Positive Displacement	From the chemical container to the pipe downstream of the backwash supply tank	Backwash flow meter

Table 3-2 – Process Pumps and Interlocks (cont'd)

Pump Name	Type	Description	Interlocks
Process clarifier polymer feed pump	Positive Displacement	From the chemical container to the process clarifier	Process flow meter
Backwash clarifier polymer feed pump	Positive Displacement	From the chemical container to the pipe upstream of the backwash clarifier	Clarified backwash flow meter
Filter press polymer feed pump	Positive Displacement	From the chemical container to the filter press	Filter press feed pump

3.2.14 Chemical injection Systems

The chemical injection systems consist of a pump and calibration column for the following systems:

- Caustic
- Coagulant
- Reducing agent

A chemical injection system consisting of a pump, calibration column, and inline mixer for the following systems:

- Process clarifier polymer
- Backwash clarifier polymer
- Filter press polymer

Operators should conduct maintenance activities with appropriate PPE.

At start-up, operators should check that manual values on the input and output lines to the chemical pump and calibration column are in their normal operating position. Operators should also check that the chemical containment for the caustic system is functional and empty. Operators should check that there is a sufficient volume of caustic in the chemical container.

During normal operation, operators should check to see that the pump runs as directed. A calibration column is located ahead of the pump so the flow rate can be checked. At shutdown, operators should follow lockout tagout procedures to de-energize mechanical equipment and seal chemical containers as necessary.

Troubleshooting should follow the steps outlined in Attachment C for the relevant chemical feed system.

Maintenance activities on the pump should follow the schedules outlined in Attachment A for the relevant chemical feed system.

3.3 Instrumentation and Controls

The operation of instrumentation and control equipment should follow the specific start-up and shut down procedures as outlined in Attachment C. Troubleshooting for system controls should follow steps outlined in Attachment C.

Table 3-3 summarizes major maintenance activities for the instrumentation and controls equipment.

Table 3-2 Instrumentation and Controls Systems Maintenance Activities

Instrument or Control Equipment	Maintenance Item	Frequency	Description
• Flow meters • pH probes • Level indicators	Element cleaning	Annually or in accordance with manufacturer's recommendations	Clean element in accordance with Attachment A and C
pH probes	Calibration	Monthly or as-needed	Calibrate pH element in accordance with Attachment C
• Flow meters • Level indicators	Calibration	As-needed	Calibrate pH elements in accordance with Attachment C
• Control valves • Flow control valves • Flow meters • pH probes • Level indicators • Pressure indicators • Pressure Switches	Visual inspection	Annually or in accordance with manufacturer's recommendations	Visually inspect the instrument or control element for corrosion or visible damage.

Maintenance activities for the flow meters, pH probes, and level indicators should coincide with system shutdowns for tank or other equipment maintenance. Flow meters and level indicators should be calibrated as required based on operator feedback. Additional maintenance activities on the instrumentation and control equipment should follow the schedules outlined in Attachment A.

3.3.1 Control Valves

Control valves should be exercised regularly to avoid seizing. See Attachment C for troubleshooting and manufacturer-recommended maintenance. Table 3-4 summarizes control valve operations.

Table 3-3 Control Valves Operations Summary

Name	Location	Interlocks
Service water flush control valve 1	Service water flush line between the rapid mix tank and process clarifier	Process clarifier feed pump
Service water flush control valve 2	Service water flush line on the process clarifier sludge line	Process clarifier sludge bleed pump
Process clarifier sludge control valve	Process clarifier sludge line	Process clarifier sludge bleed pump
Multi-media pressure filter vessel skid control valves	Multi-media pressure filter vessel skid influent, bypass and backwash	Backwash supply pump
GAC vessel skid control valves	GAC vessel skid influent, bypass, backwash, alternative flow routing	Backwash supply pump
Service water flush control valve 3	Service water flush line on the backwash clarifier sludge line	Backwash clarifier sludge bleed pump
Backwash clarifier sludge control valve	Backwash clarifier sludge line	Backwash clarifier sludge bleed pump
Service water flush control valve 4	Service water flush line on the filter press feed line	Filter press feed pump
Backwash supply tank control valve	Potable water line header to the backwash supply tank	None

Normal Operation

All control valves in the system are closed in normal operation with the exception of valves on the multi-media pressure filter and GAC vessel skids which may be set to various positions by an operator.

3.3.2 Flow Control Valves

Control valves should be exercised regularly to avoid seizing. See Attachment C for troubleshooting and manufacturer-recommended maintenance. Table 3-5 summarizes flow control valve operation.

Table 3-4 Flow Control Valves Operations Summary

Name	Location	Interlocks
Rapid Mix Tank Feed Pump FCV	Downstream of the raw water tank	Rapid mix tank feed pump
Process Clarifier Feed Pump FCV	Downstream of the rapid mix tank	Process clarifier feed pump

Normal Operation

All flow control valves in the system are throttled by control action to maintain the water level in the upstream tank.

3.3.3 Flow meters

Flow meters should be cleaned at the same time as the pipe they are associated with is cleaned or if otherwise warranted by potentially anomalous flow rate measuresments. See Attachment C for troubleshooting and manufacturer-recommended maintenance. Table 3-6 summarizes flow meter operation.

Table 3-5 Flow Meters Operations Summary

Name	Location	Controls	Alarms
Rapid Mix Tank Feed Line Flowmeter	Downstream of the raw water tank	Caustic chemical feed pump	Rapid Mix Tank Feed Line Flowmeter Low Flow Condition
			Instrument out of Range
Process Clarifier Feed Line Flowmeter	Downstream of the rapid mix tank	• Coagulant chemical feed pump • Process polymer feed pump	Process Clarifier Feed Line Flowmeter Low Flow Condition
			Instrument out of Range
Treated Water Tank Feed Line Flowmeter	Downstream of the GAC vessels	Multi-Media Pressure Filter Feed pump	Treated Water Tank Feed Line Flowmeter Low Flow Condition
			Instrument out of Range
Backwash Clarifier Feed Line Flowmeter	Downstream of the backwash holding tank	Backwash polymer feed pump	None
Discharge Line Flowmeter	Downstream of the treated water tank	Treated water discharge pump	Discharge Line Flowmeter Low Flow Condition
			Instrument out of Range
Backwash Line Flowmeter	Downstream of the backwash supply tank	Backwash supply pump	Backwash Line Flowmeter Low Flow Condition
			Instrument out of Range

3.3.4 pH probes

pH probes should be calibrated according to schedules in Attachment A and according to the manufacturer's recommendations in Attachment C. The calibration levels should be chosen to span the pH range that the pH probe experiences during normal operation. The system actions are described in the process equipment section. Table 3-7 summarizes pH operation.

Table 3-6 pH Indicators Operations Summary

Name	Location	Controls	Alarms
Rapid Mix Tank Feed pH Probe	Downstream of the raw water tank	Caustic feed pump	Instrument out of Range
Process Clarifier Feed pH Probe	Downstream of the rapid mix tank	Caustic feed pump	Instrument out of Range

3.3.5 Level Indicators

Level indicators should be calibrated upon start-up and as-needed during normal operations according to the manufacturer's recommendations in Attachment C. The system actions are described in the process equipment section. Table 3-8 summarizes level indicator operations.

Table 3-7 Level Indicators Operations Summary

Name	Location	Controls	Alarms
Raw Water Tank Level Sensor	Raw water tank	Rapid Mix Tank Feed Pump FCV	Raw Water Tank High Level Raw Water Tank Low Level Instrument out of Range
Rapid Mix Tank Level Sensor	Rapid mix tank	Process Clarifier Feed Pump FCV	Rapid Mix Tank High Level Rapid Mix Tank Low Level Instrument out of Range
Clarifier Overflow Tank Level Sensor	Clarifier overflow tank	Multi-Media Pressure Filter feed pump	Clarifier Overflow Tank High Level Clarifier Overflow Tank Low Level Instrument out of Range
Treated Water Tank Level Sensor	Treated water tank	Treated water discharge pump	Treated Water Tank High Level Treated Water Tank Low Level Instrument out of Range
Backwash Supply Tank Level Switches	Backwash supply tank	Backwash supply tank CV	Backwash Supply Tank Low Level
Backwash Holding Tank Level Sensor	Backwash holding tank	• Backwash clarifier feed pump • Backwash supply pump	Backwash Holding Tank High Level Backwash Holding Tank Low Level Instrument out of Range
Sludge Holding Tank Level Sensor	Sludge holding tank	• Filter press feed pump • Backwash clarifier sludge bleed pump • Process clarifier sludge bleed pump	Sludge Holding Tank High Level Instrument out of Range
Chemical Container Level Switches	Chemical containers	Caustic, coagulant, reducing agent, polymer make down chemical feed pumps	Associated chemical container low level
Sump Level Switches	Building sumps	Building Sumps 1 and 2	None

3.3.6 Pressure Indicators

Pressure indicators should be calibrated upon start-up and as-needed during normal operations according to the manufacturer's recommendations in Attachment C. Table 3-9 summarizes pressure indicator operation.

Table 3-8 Pressure Indicators Operations Summary

Name	Location	Alarms	System Action
Caustic PIT	Discharge line of the caustic chemical feed line	High-Pressure Chemical Feed Line Condition	Remote indication of system malfunction
Coagulant PIT	Discharge line of the coagulant chemical feed line	High-Pressure Chemical Feed Line Condition	Remote indication of system malfunction
Reducing agent PIT	Discharge line of the reducing agent chemical feed line	High-Pressure Chemical Feed Line Condition	Remote indication of system malfunction
Compressed air PIT	Compressed air line	• High Pressure Compressed Air Line Condition • Low Pressure Compressed Air Line Condition	Remote indication of system malfunction
Instrument air PIT	Instrument air line	• High Pressure Compressed Air Line Condition • Low Pressure Compressed Air Line Condition	Remote indication of system malfunction

3.3.7 Differential Pressure Indicators

Differential pressure indicators should be calibrated upon start-up and as-needed during normal operations according to the manufacturer's recommendations in Attachment C. Table 3-10 summarizes differential pressure indicator operation.

Table 3-9 Differential Pressure Indicators Operations Summary

Name	Location	Alarms	System Action
Multi-Media Pressure Filter DPIT	Multi-Media Pressure Filter	High Differential Pressure Condition	Initiation of backwash sequence
		Unexpected Differential Pressure Vessel Condition	Remote indication of system malfunction
GAC Vessel 1 DPIT	GAC Vessel 1	High Differential Pressure Condition	Initiation of backwash sequence
		Unexpected Differential Pressure Vessel Condition	Remote indication of system malfunction
GAC Vessel 2 DPIT	GAC Vessel 2	High Differential Pressure Condition	Initiation of backwash sequence
		Unexpected Differential Pressure Vessel Condition	Remote indication of system malfunction
Process Polymer Makedown DPS	Polymer Makedown Skid	Unexpected Differential Pressure Condition	Remote indication of system malfunction
Backwash Polymer Makedown DPS	Polymer Makedown Skid	Unexpected Differential Pressure Condition	Remote indication of system malfunction
Filter Press Polymer Makedown DPS	Filter Press Polymer Makedown Skid	Unexpected Differential Pressure Condition	Remote indication of system malfunction

3.3.8 Pressure switches

Pressure switches are located downstream of each pump and should be calibrated upon start-up and as-needed during normal operations according to the manufacturer's recommendations in Attachment C. The system actions are described in the process equipment section.

3.4 Ancillary Equipment

The treatment system is equipped with the following ancillary support systems:

- Emergency shower and eyewash station with water heater
- Building washdown hoses
- Air compressor system
    - Wet air receiver
    - Air dryer
    - Dry air receiver
- Building unit heaters and heated make-up air unit

The emergency shower and eyewash station have a flow switch which will cause the system to display an "Emergency Shower Eyewash in Operation" alarm. The system will remain in operation.

Specific start-up and shut down procedures for the ancillary equipment should be followed as outlined in Attachment C.

Troubleshooting should follow steps as outlined in Attachment C.

Maintenance activities on the ancillary equipment should follow the schedules outlined in Attachment A.

3.5 Interface with Existing Deep Well Injection

The extraction well system communicates to the deep well injection system and the groundwater treatment system. There is no interconnection between the groundwater treatment system and the existing deep well injection system. A manual valve is provided to control the flow of water through the systems, and separate PLCs and HMIs are provided for each system.

3.6 Shutdown Sequence

During a shutdown sequence initiated from the PLC, the following will occur:

- All motors in the system will be de-energized
- Flow control valves will be de-energized
- Control valves will be de-energized

4 Management of Change

The groundwater water treatment system will use a management-of-change (MOC) process for any changes to the system. The MOC will be used to ensure that the environmental, health, and safety risks are carefully evaluated before implementing significant changes.

4.1 Procedures

If the following elements are being evaluated for change, the MOC process should be followed:

- Changes in treatment chemicals
- Changes in equipment
- Changes to procedures
- Changes to the facilities

The MOC process includes:

1. Identifying the proposed change(s)
2. Evaluate the hazards and risks
3. Determine if the hazards and risks can be reduced, controlled, or eliminated
4. Determine if the change(s) can and should be made
    a. Determine if the change(s) require a notification to the BPW or any other regulatory authority
    b. Notify BPW or any other regulatory authority
5. Implement change(s) if determined safe to do so
6. Conduct Pre-Startup Safety Review (PSSR)
    a. Modify O&M manual and SOPs as relevant
7. Train operators on the implemented changes
8. Execute and monitor changes

4.2 Documentation Requirements

The MOC documentation template is included in Attachment F.

Attachment A

Specific Equipment and Instrumentation Identification, Operation and Maintenance Requirements

Not available until after construction

Attachment B

Engineering Plans and Specifications

Previously Submitted to EGLE in April 2021

Attachment C

Manufacturers' Equipment and Instrument Manuals

Not available until after construction

Attachment D

Process Control Documentation

Not available until after construction

Attachment E

Groundwater Extraction Well Boring Logs

BROWN AND CALDWELL

4700 Lakehurst Court Suite 100
Dublin, OH 43016

Boring/Hole #: EW-1 **Page No.:** 1 of 2

Project: Pfizer Holland
Client: Pfizer Inc.
Start Date: 5/18/10
Finish Date: 5/19/10
Project No.: 139194

BC Personnel: J. Warburton
Location: 188 Howard Avenue
Contractor: Mateco
Equipment: CME 750 ATV Rig
Method: 10.25" ID HSA

WELL CONSTRUCTION
Diameter (ID): 6"
Material: Steel
Coupling:
Hole Diameter: 14.25"

WELL DEVELOPMENT
Methods: Surged and Pumped
Duration: 0.5 hours
Vol. Purged: 580 gallons
Slug Test:

SURVEY DATA (NGVD29 and Michigan S.P. South)
Ground: 582.4 **North:** 477292.45
TOC: 584.63 **East:** 12653762.76

Depth (ft)	Well Construction	Symbol	Lithologic Description	Sample: Run	Type	Headspace, ppm	Blow Count	Recovery (ft)	Remarks
-3	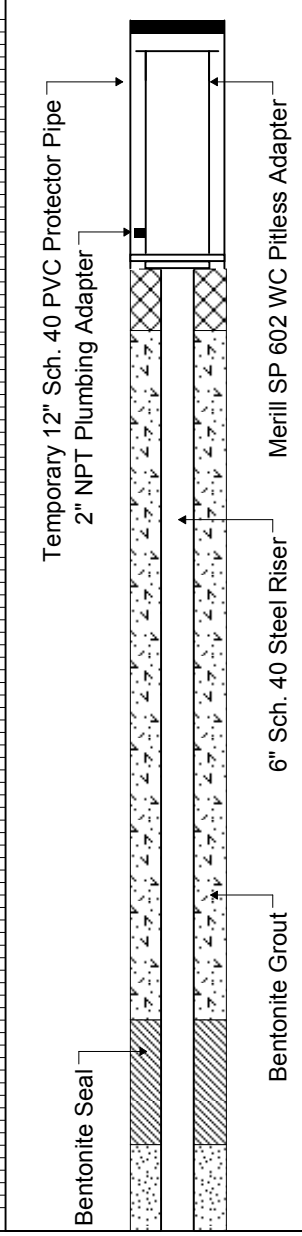								
-2									
-1									
0			Ground Surface						
			(0-16') Auger to 16'						
1									
2									
3									
4									
5									
6									
7									
8									
9									
10									
11									
12									
13									
14									
15									
16									

Boring/Hole #: EW-1 **Page No.:** 2 of 2

Depth (ft)	Well Construction	Symbol	Lithologic Description	Sample Run	Type	Headspace	Blow Count	Recovery (ft)	Remarks
17	Sand Pack		(16.0-18.4') Sand, c-m-f, some (-) silt, gray, wet	1	SS	0.0	1-1-1-2	0.8	
18									
19			(18.4-18.9') Sand, c-m-f, some (+) silt, gray, wet	2	SS	0.0	1-1-1-2	0.9	
20			(20.0-21.0') Sand, c-m-f, some (-) silt, gray, wet						
21	6" 10-slot Wire-wrapped Stainless Steel Screen			3	SS	0.0	2-2-2-2	1.0	
22									
23			(23.0-23.6') Clay, some (+) sand and silt, gray						
24			(23.6-24.2') Sand, c-m-f, little silt	4	SS	0.0	2-1-1-2	1.5	
			(24.2-24.5') Silty clay, gray, soft						
25			(24.5-25.0') Sand, m-f, little silt						
			(25.0-26.0') Silty clay, little (+) f. sand, soft, medium plasticity						
26			End of Log	5	SS	0.0		1.5	
27									
28									
29									
30									
31									
32									
33									
34									
35									

BROWN AND CALDWELL

4700 Lakehurst Court Suite 100
Dublin, OH 43016

Boring/Hole #: EW-2 **Page No.:** 1 of 2

Project: Pfizer Holland
Client: Pfizer Inc.
Start Date: 5/12/10
Finish Date: 5/14/10
Project No.: 139194

BC Personnel: J. Warburton
Location: 188 Howard Avenue
Contractor: Mateco
Equipment: CME 750 ATV Rig
Method: 10.25" ID HSA

WELL CONSTRUCTION
Diameter (ID): 6"
Material: Steel
Coupling:
Hole Diameter: 14.25"

WELL DEVELOPMENT
Methods: Surged and Pumped
Duration: 1 hour
Vol. Purged: 600 gallons
Slug Test:

SURVEY DATA (NGVD29 and Michigan S.P. South)
Ground: 584.5 **North:** 477438.41
TOC: 584.54 **East:** 12654115.83

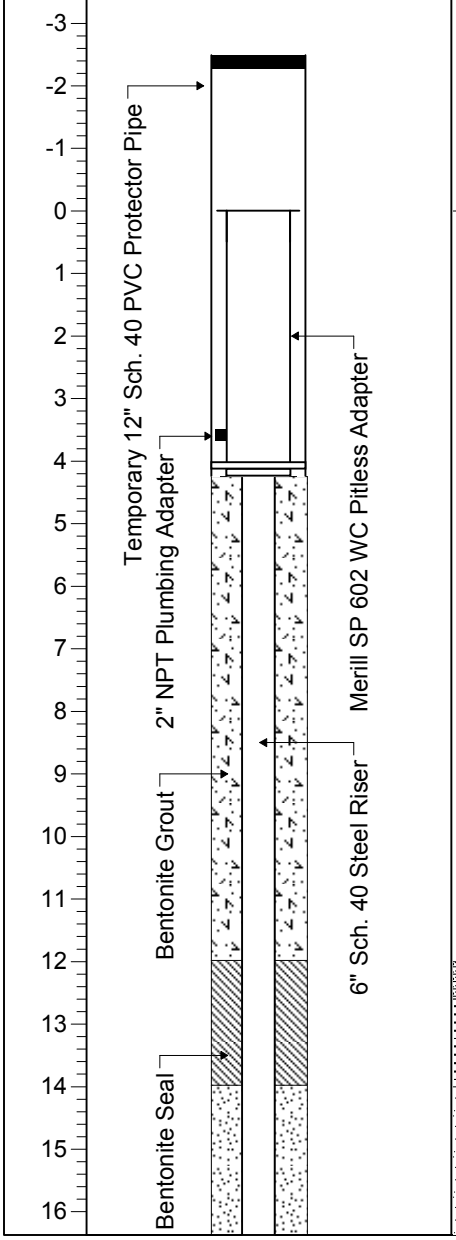

Depth (ft)	Well Construction	Symbol	Lithologic Description	Sample: Run	Type	Headspace, ppm	Blow Count	Recovery (ft)	Remarks
-3									
-2									
-1									
0			Ground Surface						
			(0-12') Auger to 12'						
1									
2									
3									
4									
5									
6									
7									
8									
9									
10									
11									
12			(12.0-12.6') Peat, brown, wet						
13			(12.6-14.0') Sand, m-f, little silt, gray, wet	1	SS		2-2-2-2	2.0	
14			(14.0-16.9') Sand, c-m-f, little silt, gray, wet						
15				2	SS		1-1-1-1	2.0	
16									

Boring/Hole #: EW-2 **Page No.:** 2 of 2

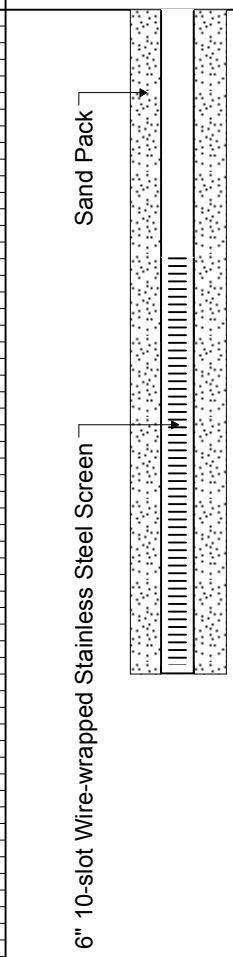

Depth (ft)	Lithologic Description	Run	Type	Headspace	Blow Count	Recovery (ft)	Remarks
17		3	SS	0.0	Wt/18"-1	0.9	
18	(18.0-18.6') Silty clay, gray, medium plasticity, moist	4	SS	0.0	Wt/12"-1/12"	1.8	
19							
20	(20.0-20.4') C. sand, gray (20.4-20.6') Peat, brown	5	SS	0.0	2-2-2-3	0.6	
21							
22	(22.0-22.4') C. sand (22.4-22.7') Silty clay (22.7-23.4') Sand, m-f, trace silt	6	SS	0.0	Wt/12"-1-3	1.4	
23							
24	(24.0-25.5') Sand, little (+) silt, gray	7	SS	0.0	2-2-2-2	2.0	
25							
26	(25.5-26.0') Silty clay, gray End of Log						
27							
28							
29							
30							
31							
32							
33							
34							
35							

BROWN AND CALDWELL

4700 Lakehurst Court Suite 100
Dublin, OH 43016

Boring/Hole #: EW-3 **Page No.:** 1 of 2

Project: Pfizer Holland
Client: Pfizer Inc.
Start Date: 5/14/10
Finish Date: 5/14/10
Project No.: 139194

BC Personnel: J. Warburton
Location: 188 Howard Avenue
Contractor: Mateco
Equipment: CME 750 ATV Rig
Method: 10.25" ID HSA

WELL CONSTRUCTION
Diameter (ID): 6"
Material: Steel
Coupling:
Hole Diameter: 14.25"

WELL DEVELOPMENT
Methods: Surged and Pumped
Duration: 0.3 hours
Vol. Purged: 240 gallons
Slug Test:

SURVEY DATA (NGVD29 and Michigan S.P. South)
Ground: 585.2 **North:** 477783.70
TOC: 585.12 **East:** 12654299.64

Depth (ft)	Well Construction	Symbol	Lithologic Description	Sample: Run	Type	Headspace, ppm	Blow Count	Recovery (ft)	Remarks
-3									
-2									
-1									
0			Ground Surface						
			(0-16') Auger to 16'						
1									
2									
3									
4									
5									
6									
7									
8									
9									
10									
11									
12									
13									
14									
15									
16									

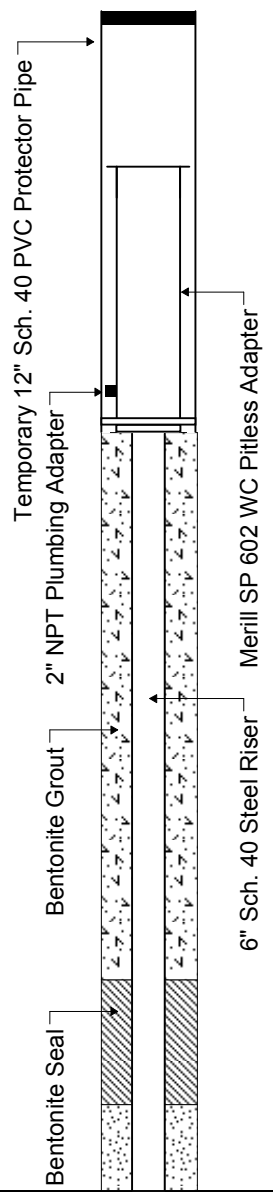

Depth (ft)	Well Construction	Symbol	Lithologic Description	Sample Run	Type	Headspace	Blow Count	Recovery (ft)	Remarks
17	Sand Pack		(16.0-18.8') Sand, c-m-f, trace silt, gray, wet	1	SS	0.0	2-2-2-2	1.4	
18									
19			(18.8-19.5') Sand, m-f, little silt, gray, wet	2	SS	0.0	2-2-3-3	1.5	
20			(20.0-21.0') Sand, c-m-f, trace silt, gray, wet						
21	6" 10-slot Wire-wrapped Stainless Steel Screen			3	SS	0.0	2-2-2-2	1.0	
22									
23			(22.5-23.4') F. sand, some (-) silt, gray	4	SS	0.0	2-2-2-2	1.5	
24			(24.0-25.0') F. sand, some (+) silt and clay, gray, wet						
25				5	SS	0.0	NR	1.0	
26			(26.0-26.4') Silty f. sand						
27			(26.4-27.4') Silty clay, gray-brown, medium plasticity, moist	6	SS	0.0	1-2-2-3	1.4	
28			End of Log						
29									
30									
31									
32									
33									
34									
35									

BROWN AND CALDWELL

4700 Lakehurst Court Suite 100
Dublin, OH 43016

Boring/Hole #: EW-4 **Page No.:** 1 of 2

Project: Pfizer Holland
Client: Pfizer Inc.
Start Date: 5/17/10
Finish Date: 5/18/10
Project No.: 139194

BC Personnel: J. Warburton
Location: 188 Howard Avenue
Contractor: Mateco
Equipment: CME 750 ATV Rig
Method: 10.25" ID HSA

WELL CONSTRUCTION
Diameter (ID): 6"
Material: Steel
Coupling:
Hole Diameter: 14.25"

WELL DEVELOPMENT
Methods: Surged and Pumped
Duration: 0.5 hours
Vol. Purged: 800 gallons
Slug Test:

SURVEY DATA (NGVD29 and Michigan S.P. South)
Ground: 584.9 **North:** 477966.71
TOC: 584.52 **East:** 12654424.20

Depth (ft)	Well Construction	Symbol	Lithologic Description	Sample: Run	Type	Headspace, ppm	Blow Count	Recovery (ft)	Remarks
-3									
-2									
-1									
0			Ground Surface						
1			(0-16') Auger to 16'. Pea gravel at 4', offset 5' North, re-auger to 16'						
2									
3									
4									
5									
6									
7									
8									
9									
10									
11									
12									
13									
14									
15									
16									

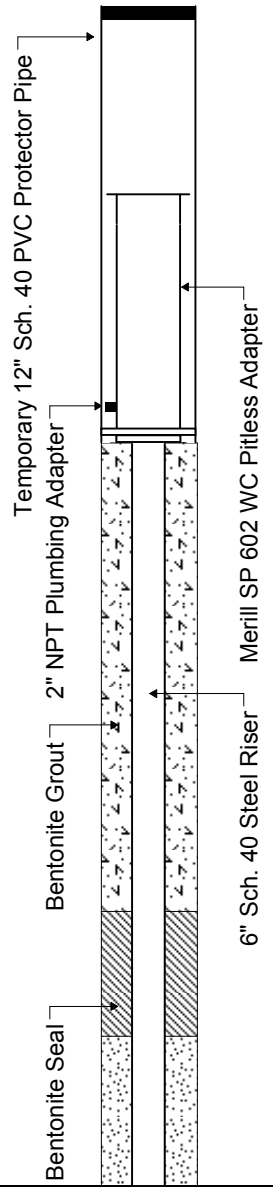

Boring/Hole #: EW-4 **Page No.:** 2 of 2

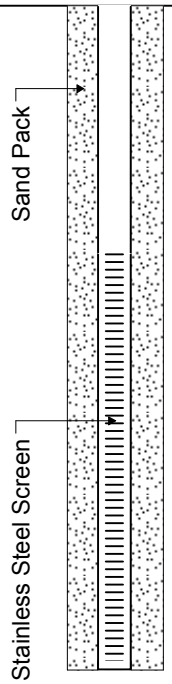

Depth (ft)	Lithologic Description	Run	Type	Headspace	Blow Count	Recovery (ft)	Remarks
17	(16.0-20.6') F. sand, some (-) silt, gray, wet	1	SS	0.0	6-4-2-2	1.0	
18							
19		2	SS	0.0	5-4-3-4	1.7	
20							
21	(20.6-20.8') Wood fragments and peat, brown (20.8-21.4') Sand, m-f, trace c. sand, little silt	3	SS	0.0	2-2-2-1	1.4	
22	(22.0-22.4') Sand, c-m-f, gray						
23	(22.4-22.9') Silty clay, trace f. sand, soft, medium plasticity	4	SS	0.0	2-2-1-1	0.9	
24	(24.0-24.3') Sand and gravel, some (-) silt and clay, dark brown, wet						
25	(24.3-24.8') Silty clay	5	SS	0.0	1-1-1-1	1.4	
26	(24.8-25.9') Silty clay, some f. sand						
27	End of Log						
28							
29							
30							
31							
32							
33							
34							
35							

BROWN AND CALDWELL

4700 Lakehurst Court Suite 100
Dublin, OH 43016

Boring/Hole #: EW-5 **Page No.:** 1 of 2

Project: Pfizer Holland
Client: Pfizer Inc.
Start Date: 5/19/10
Finish Date: 5/19/10
Project No.: 139194

BC Personnel: J. Warburton
Location: 188 Howard Avenue
Contractor: Mateco
Equipment: CME 750 ATV Rig
Method: 10.25" ID HSA

WELL CONSTRUCTION
Diameter (ID): 6"
Material: Steel
Coupling:
Hole Diameter: 14.25"

WELL DEVELOPMENT
Methods: Surged and Pumped
Duration: 2 hours
Vol. Purged: 300 gallons
Slug Test:

SURVEY DATA (NGVD29 and Michigan S.P. South)
Ground: 584.7 **North:** 478221.32
TOC: 584.56 **East:** 12654295.02

Depth (ft)	Well Construction	Symbol	Lithologic Description	Sample: Run	Type	Headspace, ppm	Blow Count	Recovery (ft)	Remarks
-3									
-2									
-1									
0			Ground Surface						
			(0-16') Auger to 16'.						
1									
2									
3									
4									
5									
6									
7									
8									
9									
10									
11									
12									
13									
14									
15									
16									

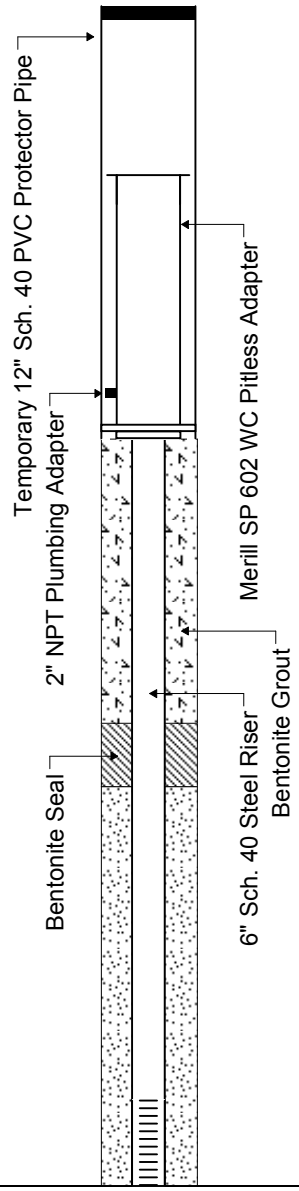

Boring/Hole #: EW-5 **Page No.:** 2 of 2

Depth (ft)	Well Construction	Symbol	Lithologic Description	Sample Run	Type	Headspace	Blow Count	Recovery (ft)	Remarks
17	Sand Pack; 6" 10-slot Wire-wrapped Stainless Steel Screen		(16.0-16.3') Sand, c-m-f, some (-) silt, gray, wet (16.3-16.7') Silty clay, little f. sand (16.7-19.0') Sand, m-f, little silt	1	SS	0.0	1-1-3-6	1.3	
18									
19			(19.0-19.2') Silty clay, little (+) f. sand	2	SS	0.0	2-2-2-1	1.2	
20			(20.0-23.5') Silty clay, little (-) f. sand, gray, medium plasticity, moist						
21				3	SS	0.0	2-2-2-2	1.4	
22									
23				4	SS	0.0	1-1-1-1	1.5	
24			End of Log						
25									
26									
27									
28									
29									
30									
31									
32									
33									
34									
35									

Attachment F

Management of Change Documentation

Management of Change Procedure

Project Name	
Project Manager	
Date	

Type of Change:

☐ Chemical ☐ Equipment ☐ Procedure ☐ Facility ☐ Other (list)_____

Case for Change	
Proposed change	
Why change is being proposed/required	
Intended outcome	
Potential Risks and Hazards	
Estimated timeframes	
Additional factors	
Estimated costs	

Step	Role/Title, Name
Identifying the proposed change(s)	
Evaluate the hazards and risks	
Determine if the hazards and risks can be reduced, controlled, or eliminated	
Determine if change should be made	
Determine if notification is required and notify regulatory agency	
Conduct pre-startup safety review	
Train operators on proposed changes	
Implement and monitor changes	

Attachment G

Holland BPW Wastewater Discharge Permit

WASTEWATER DISCHARGE PERMIT
PERMIT NO. HT-2021-WLC-24

PART I: GENERAL INFORMATION

Company Name: Warner-Lambert Company, LLC

Mailing Address: 100 Route 206 South
Peapack, NJ 07977

Facility Address: 188 Howard Avenue
Holland, MI 49424

The Holland Board of Public Works (BPW) hereby authorizes the permittee specified above to discharge industrial wastewater to the Holland Area Water Reclamation Facility (WRF) sewer system. This authorization is granted in accordance with the City's Ordinance as amended or equivalent local ordinance and any applicable provisions of Federal or State laws or regulations.

The requirements and conditions established in this permit do not relieve the company of its obligation to comply with any applicable pretreatment regulations, standards, requirements, or laws that may become effective during the term of this permit.

In addition, this permit is granted in accordance with the application filed with BPW, and in conformity with plans, specifications, and other substantive data submitted to the BPW in support of the above application.

To continue discharging industrial wastewater after the expiration date, it is the responsibility of the permittee to submit an application for permit reissuance at least ninety (90) day before the expiration of the existing permit.

Issued Date: activated upon request

Effective Date:

Expiration Date:

Issued By:

Environmental Compliance Supervisor
Holland Area Water Reclamation Facility

Authorized by:

Superintendent
Holland Area Water Reclamation Facility

Part II - Discharge Limitations and Monitoring Requirements

A. MONITORING POINT 001

1. Monitoring Point Location: See attached map
2. Wastewater Discharge Type: Continuous
3. Average Discharge Flow: 24,000 gpd
4. Approved Composite Sampling Method: Proportional
5. Discharge Limitations: During the period beginning on the effective date of this permit and lasting until the expiration date of this permit, the discharge shall be limited and monitored by the permittee as specified herein.

LOCAL LIMIT POLLUTANTS

Pretreatment Standard Used for Determining Discharge Limits: Local Limits

Discharge Parameter	Daily Minimum Concentratio	Daily Maximum Concentration	Daily Maximum Loading	Sample Frequency	Sample Type
Chemical Oxygen Demand (COD)[1]	--	2000 mg/l	80 lbs/day	n/a	Composite
Total Suspended Solids (TSS)[1]	--	1400 mg/l	100 lbs/day	n/a	Composite
Total Phosphorus (P)[1]	--	40 mg/l	1 lbs/day	n/a	Composite
Grease and Oil (G&O)[1]	--	150 mg/l	5 lbs/day	n/a	Composite
pH	6.0 S.U.	11.0 S.U.	--	n/a	Grab
	--		--		
	--		--		

[1] Limitations listed for COD, TSS, P and G&O are the maximum concentration and loadings that can be discharged without a Special Discharge Allocation (SDA).

SPECIAL DISCHARGE ALLOCATION(S)

Discharge Parameter	Daily Maximum	Effective Date	Expiration Date
Chemical Oxygen Demand (COD)	lbs	n/a	
Total Suspended Solids (TSS)	lbs	n/a	
Total Phosphorus (P)	lbs	n/a	
Grease and Oil (G&O)	lbs	n/a	
Chlorides	lbs	n/a	

CATEGORICAL POLLUTANT

Category(s): n/a

Subcategory(s): n/a

Source: n/a

Pretreatment Standard Used for Determining Discharge Limits: Categorical (40 CFR

Toxic Organic Management Plan: Permittee is exempt from toxic organic monitoring per the TOMP approved on _____n/a_____. Permittee shall submit a TOMP certification statement at least once every 6 months.

Discharge Parameter	Daily Maximum Concentration	Monthly Average Concentration	Sample Frequency	Sample Type
Benzene	0.16 mg/L		one sample/month	grab
Chlorobenzene	1.7 mg/L		one sample/month	grab
PFOA	12,000 ppt		one sample/month	grab
PFOS	12 ppt		one sample/month	grab

PART III – DEFINITIONS

A. DAILY CONCENTRATION is the sum of the concentrations of the individual samples of a parameter divided by the number of samples taken during any calendar day. The daily concentration shall be used to determine compliance with all maximum and minimum daily concentration limitations except for pH. For pH, the maximum value of any individual sample taken during a calendar day shall be used for determining compliance with the maximum daily concentration limitation. Similarly, the minimum value of any individual sample taken during a calendar day shall be used for determining compliance with the minimum daily pH concentration limitation.

B. FLOW PROPORTIONAL COMPOSITE SAMPLE is a 24-hour composite sample with the sample volume proportional to the discharge flow.

C. GRAB SAMPLE is a single sample taken at neither a set time nor flow.

D. INTERFERENCE is a discharge which, alone or in conjunction with a discharge or discharges from other sources, both: 1) Inhibits or disrupts the POTW, its treatment processes or operations, or its sludge processes, use or disposal; and 2) therefore, is a cause of a violation of any requirement of the POTW's NPDES permit (including an increase in the magnitude or duration of a violation) or, of the prevention of sewage sludge use or disposal in compliance with the following statutory provisions and regulations or permits issued thereunder (or more stringent state or local regulations): Section 405 of the Clean Water Act, the Solid Waste Disposal Act (SWDA) (including Title II, more commonly referred to as the Resource Conservation and Recovery Act (RCRA), and including state regulations contained in any state sludge management plan prepared pursuant to Subtitle D of the SWDA), the Clean Air Act, the Toxic Substances Control Act, and the Marine Protection, Research and Sanctuaries Act. (This definition does not apply to sample matrix interference).

E. MONTHLY CONCENTRATION is the sum of the daily concentrations determined during a calendar month by the number of daily concentrations determined for that calendar month. The calculated monthly concentration will be used to determine compliance with any maximum monthly concentration limitations.

F. NATIONAL PRETREATMENT STANDARDS are the regulations promulgated by or to be promulgated by the Federal Environmental Protection Agency pursuant to Section 307(b) and (c) of the Federal Act. The standards establish nationwide limits for specific industrial categories for discharge to a POTW.

G. PRETREATMENT is reducing the amount of pollutants, eliminating pollutants, or altering the nature of pollutant properties to a less harmful state prior to discharge into a public sewer. The reduction or alteration can be physical, chemical, or biological processes, process changes, or by other means. Dilution is not considered pretreatment unless expressly authorized by an applicable National Pretreatment Standard for a particular industrial category.

H. Publicly owned treatment works (POTW) means the treatment works as defined by Section 212 of the Federal Water Pollution Control Act including any devices and systems used in the monitoring, testing, storage, treatment, recycling, and reclamation of municipal sewage and industrial waste which are connected to or part of the Holland Area Water Reclamation Facility. The systems include sewers, pipes, and equipment used to convey wastewater to the treatment facility. The term also includes the municipality as defined in Section 502(4) of the Federal Water Pollution Control Act which has jurisdiction over the indirect discharges to and the discharges from such a treatment works.

I. QUARTERLY MONITORING FREQUENCY refers to a three month period, defined as January through March, April through June, July through September, and October through December.

J. TIME PROPORTIONAL COMPOSITE SAMPLE is a 24-hour composite sample comprised of samples collected at a constant time interval. Usage of time proportioned composite sampling is prohibited unless specifically approved by the BPW.

K. TOMP refers to an acceptable Toxic Organic Management Plan (TOMP).

PART IV - STANDARD CONDITIONS

A. PROHIBITED DISCHARGES

The permittee shall comply with all the general prohibited discharge standards in the City's Ordinance as amended or equivalent local ordinance. These prohibitions include that no person shall discharge or cause to be discharged into the sewage system any wastes containing any of the following substances or which exhibit the following characteristics:

1. It shall be unlawful to discharge any wastewater to the POTW except in accordance with the provisions of this Ordinance.

2. No user shall contribute or cause to be contributed, directly or indirectly to the POTW, any pollutant or wastewater which will pass-through or cause interference with the operation or performance of the POTW.

3. No person shall discharge or cause to be discharged to any public sewer any storm water, surface water, ground water, roof runoff, subsurface drainage, cooling water, unpolluted air conditioning water or unpolluted industrial process water. No footing drain, roof downspout, areaway drain or other source of surface water or ground water shall be connected to a public sewer. All footing drain water shall be discharged to storm sewers or dry wells. Storm water and all other unpolluted drainage shall be discharged to sewers specifically designated as storm sewers, or to a natural outlet approved by the Michigan Department of Environment, Great Lakes and Energy (EGLE). The discharge of cooling water or unpolluted industrial process water shall only be permitted when authorized and approved by the EGLE.

4. Any substances which by reason of their nature or quantity may create a fire or explosion hazard or be injurious to the POTW or to the operation of the POTW, including but not limited to, wastestreams with a closed cup flashpoint of less than one hundred forty (140) degrees Fahrenheit or sixty (60) degrees Centigrade using the test methods specified in 40 CFR 261.21.

5. Any solid or viscous substances which may cause obstruction to the flow in a sewer or other interference with the operation of the POTW such as, but not limited to: grease, garbage with particles greater than one-half inch (1/2") in any dimension, or any material which can be disposed of as trash.

6. Any wastewater having a pH less than six (6.0) or greater than eleven (11.0) or having any other corrosive property capable of causing damage or hazard to structures, equipment, or personnel of the POTW.

7. Any substance which may cause a public nuisance, cause hazard to life or prevent entry into the sewers for maintenance and repair.

8. Heat in amounts which will inhibit biological activity in the POTW resulting in interference, but in no case heat in such quantities that the temperature at the POTW exceeds forty (40) degrees Centigrade (one hundred and four (104) degrees Fahrenheit).

9. Petroleum oil, nonbiodegradable cutting oil, or products of mineral oil origin in amounts that will cause interference or pass-through.

10. Pollutants which result in the presence of toxic gases, vapors, or fumes within the POTW in a quantity that may cause acute worker health and safety problems.

11. Any trucked or hauled pollutants, except at discharge points and as otherwise designated by the BPW.

12. Any pollutant, including oxygen demanding pollutants released in a discharge at a flow rate and or concentration (including any slug discharge), which may cause interference to the POTW.

13. Any of the following toxic pollutants (a) those pollutants listed on the current critical materials register prepared pursuant to Section 66 of the Water Resources Commission Act (MCLA Sec. 323.1 et seq) by the Michigan Water Resources Commission, and (b) those pollutants identified by the BPW as a "toxic pollutant" by amendment to the Sewer Use Ordinance

    If a pollutant is specifically allowed by the BPW, local ordinance, or categorical pretreatment standards, then the above paragraph does not apply.

14. Any toxic substances in amounts exceeding standards promulgated by the administrator of the United States Environmental Protection Agency pursuant to Section 307 (a) of the Federal Water Pollution Act of 1972, as amended.

15. Any radioactive wastes or isotopes of such half-life or concentration as may exceed limits established by the BPW in compliance with applicable State or Federal regulations.

16. Any discoloration other than the color of normal strength domestic waste including, but not limited to dyes, inks and vegetable tanning solutions which singularly or in conjunction with other waste constituents is deleterious to treatment and/or sludge disposal practices or a hazard to the POTW and its employees.

17. Any wastewater discharge with a monthly average hydrogen sulfide gas concentration above the NIOSH Recommended Exposure Limit (10 ppm) and/or with a peak hydrogen sulfide gas concentration above the NIOSH Immediately Dangerous to Life and Health limit (100 ppm) without approval of the control authority. Approval of Control Authority for alternate limits will be subject to the following: 1) Submittal of an acceptable health and safety plan that sufficiently outlines procedures for the safe access of the impacted site and sanitary sewer; 2) Demonstration that the discharge will not create nuisance odors; and 3) Completion of any improvements to the sanitary sewer system (at user's expense) determined necessary by the control authority in order to prevent increased corrosion due to the elevated hydrogen sulfide concentrations.

18. Any unused pharmaceuticals (both over the counter and prescription only medications).

19. Any wastewater having effluent characteristics in excess of the values outlined in Table 1:

TABLE 1 – PROHIBITED POLLUTANTS	
Pollutant	Daily Maximum Allowable Concentration (mg/l)
Organics	
Acetone	170
Benzene	0.16
Methyl Ethyl Ketone	120

Chloroethane	1.8
Chloromethane	1.2
Chloroform	0.64
Dibromochloromethane	0.086
1,4-Dichlorobenzene	0.40
1,1-Dichloroethane	8.3
1,1-Dichloroethylene	1.4
cis-1,2-Dichloroethylene	2.9
trans-1,2-Dichloroethylene	2.8
Diethyl Ether	21
Ethyl Benzene	0.44
Lindane	0.00038
4-Methyl-2-Pentanone	20
Methylene Chloride	0.66
Styrene	0.29
Tetrachloroethylene	0.050
Toluene	3.5
1,1,1-Trichloroethane	1
Trichloroethylene	0.34
1,2,4-Trimethylbenzene	0.50
Xylenes, Total	0.91
Phenols, Total	0.90
Metals	
Arsenic	0.12
Cadmium	0.059
Chromium	1.3
Copper	1.3
Cyanide, Amenable	0.083
Lead	1.1
Lithium	2.9
Mercury	See Part IV.A.20
Molybdenum	0.28
Nickel	0.865
Selenium	0.10
Silver	0.037

Zinc	4.2
Compatibles	
Grease & Oil (Non-Polar Fraction)	200*

*Grease & Oil limitation is a firm limit for the non-polar fraction. Polar fraction in excess of the above stated limit is allowed under the conditions of Sections 21 and 22.

20. There shall be no detectable amounts of mercury discharged into the POTW. The local discharge limitation for mercury is established at the method detection limit (MDL) in accordance with the following:

    Mercury sampling procedures, preservation and handling, and analytical protocol for compliance monitoring shall be in accordance with EPA Method 245.1. The MDL, developed in accordance with the procedure specified in 40 CFR 136 shall not exceed 0.2 ug/L for mercury unless higher levels are appropriate due to matrix interference. The evaluation of potential matrix interference(s) shall include, at a minimum, the following:

    a. A demonstration that the laboratory conducting the analysis is capable of achieving the MDL of 0.2 ug/L in reagent water;

    b. A demonstration that the MDL of 0.2 ug/L cannot be achieved in the effluent; and

    c. A demonstration that an attempt has been made to resolve the matrix interference(s).

    In cases where true matrix interference(s) can be demonstrated, a discharge-specific MDL will be developed in accordance with the procedure in 40 CFR 136. Discharge-specific MDLs will be incorporated into the wastewater discharge permit.

21. Any wastewater containing more of the substances referenced in Table 2, unless permitted by Special Discharge Allocation.

    In addition to the limits in Table 2, any discharge that, in the judgment of the BPW, would contribute a significant amount of these substances due to exceptional flowage, regardless of mg/l concentration, shall be prohibited except by Special Discharge Allocation.

TABLE 2 – COMPATIBLE POLLUTANTS

	Daily Maximum mg/l		Daily Maximum pounds per day
Biochemical Oxygen Demand (BOD)	1,000*	and	40*
Chemical Oxygen Demand (COD)	2,000*	and	80*
Total Suspended Solids (TSS)	1,400*	and	100*
Total Phosphorus (P)	25*	and	1*
Chlorides	3,200*	and	100*
Grease & Oil (Polar Fraction)	150*	and	5*

*or as approved by the EGLE in accordance with the BPW's approved procedures, with any change in such approved amounts being effective upon publication by the BPW in a daily newspaper of general circulation in the Holland area.

B. SURCHARGES

The industrial user will be surcharged pursuant to the local ordinance for non-domestic wastes containing compatible pollutants in excess of the following concentrations:

TABLE 3 – SURCHARGE LIMITS	
Parameter	Surcharge Limits
Biochemical Oxygen Demand (BOD)	250mg/l
Chemical Oxygen Demand (COD)	500 mg/l
Total Suspended Solids (TSS)	250 mg/l
Total Phosphorus (P)	5.0 mg/l
Polar Grease and Oil (G&O)	50 mg/l

C. RIGHT OF ENTRY

The BPW's employees or authorized representative shall have ready access to the permittee's premises to engage in inspection, sampling, compliance monitoring and/or metering activities. Each such activity shall be commenced and completed at reasonable times, and in a reasonable manner. It is the permittee's responsibility to make prompt and necessary arrangements so that upon presentation of appropriate credentials, personnel from the BPW will be permitted to enter immediately for the purpose of performing their specific responsibilities.

D. RECORDS RETENTION

The permittee shall retain and preserve for no less than three (3) years, any records, books, documents, memoranda, reports, correspondence, and any and all summaries thereof, relating to monitoring, sampling and chemical analyses made by or on behalf of the permittee in connection with its discharge.

All records that pertain to matters that are the subject of special orders or any other enforcement or litigation activities brought by the BPW shall be retained and preserved by the permittee until all enforcement activities have concluded and all periods of limitation with respect to any and all appeals have expired.

E. CONFIDENTIAL INFORMATION

Except for data determined to be confidential under the local ordinance, all reports required by this permit shall be available for public inspection at the office of the Holland Area Water Reclamation Facility.

F. RECORDING OF RESULTS

For each measurement or sample taken pursuant to the requirements of this permit, the permittee shall record the following information:

1. The exact place, date, time, and method of sampling;
2. The names of the persons taking the sample.
3. The dates the analyses were performed;
4. The person(s) who performed the analyses;
5. The analytical techniques or methods used; and
6. The results of all required analyses.

G. OPERATION AND MAINTENANCE OF PRETREATMENT FACILITIES

The permittee shall operate and maintain any and all pretreatment facilities in a prudent and professional manner. Records of operation and maintenance shall be provided to the BPW for review, upon request.

H. DILUTION

No permittee shall increase the use of potable or process water or, in any way, attempt to dilute a discharge as a partial or complete substitute for adequate treatment to achieve compliance with the limitations contained in this permit. The BPW may impose mass limitations on permittees who use dilution to meet applicable pretreatment standards or requirements or in other cases where the imposition of mass limitations is appropriate.

I. PROPER DISPOSAL OF PRETREATMENT SLUDGE AND SPENT CHEMICALS

The disposal of sludge and spent chemicals generated shall be done in accordance with Section 405 of the Clean Water Act and Subtitles C and D of the Resource Conservation and Recovery Act.

J. SIGNATORY REQUIREMENTS

All reports required by this permit shall be signed by a principal executive officer of the permittee, or his designee.

K. REVOCATION OF PERMIT

The permit issued to the permittee by the BPW may be revoked when, after inspection, monitoring, or analysis, it is determined that the discharge of wastewater to the sanitary sewer is in violation of Federal, State, or Local laws, ordinances, or regulations. Additionally, falsification or intentional misrepresentation of data or statements pertaining to the permit application or any other required reporting form shall be cause for permit revocation.

L. FALSIFYING INFORMATION OR TAMPERING WITH MONITORING EQUIPMENT

Knowingly making any false statement on any report or other document required by this permit or knowingly rendering any monitoring device or method inaccurate, may result in punishment under the criminal laws of the local jurisdiction, as well as being subject to civil penalties and relief.

M. MODIFICATION OR REVISION OF THE PERMIT

1. The terms and conditions of this permit may be subject to modification by the BPW at any time as limitations or requirements as identified in the local ordinance are modified, or other just cause exists.

2. This permit may also be modified to incorporate special conditions resulting from the issuance of a special order.

3. The terms and conditions may be modified as a result of the U.S. EPA promulgating a new federal pretreatment standard.

4. Any permit modifications which result in new conditions in the permit shall include a reasonable time schedule for compliance if necessary.

N. REQUIREMENT TO REAPPLY

This permit shall expire on the expiration date identified. Existing permittees shall apply for permit reissuance a minimum of ninety (90) days prior to the expiration of existing permits on a form prescribed by the BPW. Failure to submit a timely reapplication for reissuance may result in a delayed issuance of a permit and a cessation of unpermitted discharges to the sewer system.

O. LIMTATIONS ON PERMIT TRANSFER

Wastewater discharge permits are issued to a specific process or operation. A wastewater discharge permit shall not be reassigned or transferred or sold to a new owner, new user, different premises or a new or changed operation without prior approval of the BPW.

P. SEVERABILITY

The provisions of this permit are severable, and if any provision of this permit, or the application of any provision of this permit to any circumstance, is held invalid, the application of such provision to other circumstances, and the remainder of this permit shall not be affected thereby.

Q. PROPERTY RIGHTS

The issuance of this permit does not convey any property rights in either real or personal property, or any exclusive privileges, nor does it authorize any invasion of personal rights, nor infringement of Federal, State, or Local regulations.

R. NEW SOURCE COMPLIANCE DEADLINE

New sources shall install and have in operating condition, and shall "start-up" all pollution control equipment required to meet applicable Pretreatment Standards before beginning to discharge. Within the shortest time feasible (not to exceed 90 days), New Sources must meet all applicable Pretreatment Standards.

S. APPLICABLE PENALTIES

The BPW has the authority to seek or assess civil or criminal penalties of up to $1,000 per day or the maximum allowable under State law for each violation by the permittee of the limitations and other requirements contained in this permit.

T. TERMINATION OF SERVICES

The BPW has the authority to terminate water and/or sewer service for violations of the local ordinance, or in emergency situations.

PART V - REPORTING REQUIREMENTS

A. SLUG CONTROL/SPILL PREVENTION PLAN

The permittee is required initially to submit and implement a Slug Control/Spill Prevention Plan (SC/SPP) in accordance with the local ordinance to provide protection against accidental discharges to the POTW, unless the permittee has received a written notification from the BPW exempting them from this requirement.

In addition, the permittee shall review and, if necessary, modify or update its SC/SPP and provide an updated copy to the BPW:

1. Every two (2) years and/or

2. Upon any substantial change in operation

B. DISCHARGE MONITORING REPORT

To confirm compliance with the permit limitations outlined in Part II of this permit and for calculation of any surcharges and/or Special Discharge Allocations applicable to the permittee's discharge, the permittee shall submit a Discharge Monitoring Report (DMR) at the frequency required by Part VI of this permit. The DMR shall consist of laboratory report(s) prepared by the laboratory(s) which performed analysis of the discharge. Laboratory reports shall contain at a minimum:

1. Collection date of sample

2. Analyses results listed with associated units, qualifiers (if any), dilution factors, test method, analyst, and test date.

3. Quality Control report showing quality control testing and associated results for the analyses performed.

4. Chain of Custody Form(s) for the sample(s) tested.

C. BASELINE MONITORING REPORT

Within 180 days after the effective date of a categorical Pretreatment Standard, or 180 days after the final administrative decision made upon a category determination submission under 40 CFR 403.6(a)(4), whichever is later, existing Industrial Users subject to such categorical Pretreatment Standards and currently discharging to or scheduled to discharge to the POTW shall be required to submit to the Control Authority a Baseline Monitoring Report in accordance with 40 CFR 403.12(b).

D. 90-DAY COMPLIANCE REPORT (90-DAY CR)

Categorical Industries must submit a 90-day Compliance Report to the BPW within 90 days following the date for final compliance with applicable Categorical Pretreatment Standards or, in the case of a New Source, within 90 days following the commencement of discharge. The report shall indicate the nature and concentration of all pollutants in the discharge from the regulated process which are limited by such standards and the average and maximum daily flow for these process units in the user facility which are limited by such pretreatment standards or requirements. Where equivalent mass or concentration limits are established by the BPW for a user, this report shall contain a reasonable measure of the user's long-term production rate. Where a user is subject to categorical pretreatment standards expressed in terms of allowable pollutant discharge per unit of production, the report shall include the user's actual production during the appropriate sampling period. The report shall state whether the applicable pretreatment standards are being met on a consistent basis and, if not, what additional O&M and/or pretreatment is necessary to bring the user into compliance with the applicable pretreatment standards. This statement shall be signed by an authorized representative of the user.

E. CONTINUING COMPLIANCE REPORTS (CCR)

In accordance with 40 CFR 403.12 (e) and the local ordinance, Categorical Industries shall, after the effective date of the permit, submit to the BPW, reports indicating the nature and concentration of pollutants in the effluent which are limited by the standards specified in Part II of the permit.

Data obtained through sampling and analysis reported in the CCR must be performed during the period covered by the CCR, and must be representative of conditions occurring during the reporting period. All analyses shall be performed in accordance with the methods indicated in 40 CFR Part 136 and amendments thereto.

If the permittee monitors any pollutant more frequently than required by this permit, in accordance with 40 CFR Part 136 or other EPA approved methods, the results of such monitoring shall be submitted with the applicable Continuing Compliance Report.

If sampling by the permittee indicates a violation of Part II of this permit, the permittee shall notify the BPW within 24 hours of becoming aware of the violation. The permittee shall also repeat the sampling and analysis and submit the results of the repeat analyses to the BPW within 30 days after becoming aware of the violation.

F. SEMIANNUAL COMPLIANCE REPORTS

In accordance with the local ordinance, Non-Categorical Significant Industrial Users shall, after the effective date of the permit, submit to the BPW, reports indicating the nature and concentration of pollutants in the effluent which are limited by the standards specified in Part II of the permit.

Data obtained through sampling and analysis reported in the Semiannual Report must be performed during the period covered by the Semiannual Report, and must be representative of conditions occurring during the reporting period. All analyses shall be performed in accordance with the methods indicated in 40 CFR Part 136 and amendments thereto.

If the permittee monitors any pollutant more frequently than required by this permit, in accordance with 40 CFR Part 136 or other EPA approved methods, the results of such monitoring shall be submitted with the applicable Semiannual Report.

If sampling by the permittee indicates a violation of Part II of this permit, the permittee shall notify the BPW within 24 hours of becoming aware of the violation. The permittee shall also repeat the sampling and analysis and submit the results of the repeat analyses to the BPW within 30 days after becoming aware of the violation.

G. MERCURY REDUCTION PLAN

To ensure that the maximum allowable mercury loading to the POTW is not exceeded, the BPW may require any nondomestic user with a reasonable potential to discharge mercury to develop, submit for approval and implement a Mercury Reduction Plan (MRP). The MRP may be required by permit if the nondomestic user has not violated the local limit for mercury, but the BPW has determined that a reasonable potential for such a violation may exist. MRPs may be required in notices of violations, orders or other enforcement actions when the nondomestic user has violated the mercury local limit. At a minimum, an approvable MRP shall contain the following:

1. A written commitment by the nondomestic user to reduce all nondomestic discharges of mercury to levels below the MDL within a time frame approved by the BPW;

2. Within 60 days of notification by the BPW that a MRP is required, The nondomestic user shall supply an initial identification of all potential sources of mercury which could be discharged to the POTW;

3. Specific strategies for mercury reduction with reasonable time frames for implementation, capable of ensuring that mercury discharges will be below the specified MDL within a time frame approved by the BPW;

4. A program for sampling and analysis of the nondomestic discharge for mercury in accordance with [EPA Method] 245.1 methods;

5. A demonstration of specific, measurable and/or otherwise quantifiable mercury reductions consistent with the goal of reducing mercury discharges below the specified MDL. Where such reductions cannot be demonstrated through normal effluent monitoring (e.g., mercury discharges are already near MDL), the demonstration should incorporate the following:

    a. Internal process monitoring, documenting the results of mercury reduction strategies at sampling locations within the facility (e.g., a program of regular monitoring of sink traps where mercury containing reagents had previously been disposed, but have since been substituted by non-mercury containing compounds).

    b. Internal and/or effluent sampling utilizing clean and/or ultra-clean sampling and analytical methods as referenced by USEPA federal register. Note that the results of such monitoring will not be used for compliance purposes unless performed in accordance with EPA Method 245.1 and collected at the appropriate compliance measurement location.

    c. Loading calculations wherein the nondomestic user calculates the total mass of mercury reduced from the sanitary sewer discharge through reagent substitutions, changes in disposal practices and/or other approved MRP strategies implemented.

6. A semiannual report on the status of the mercury reduction efforts. At a minimum, these reports shall:

    a. Identify compliance or noncompliance with specific reduction commitments in the MRP;

    b. Summarize the analytical, mass-based or other quantifiable demonstrations of mercury reductions performed to date;

    c. Provide all applicable analytical data;

    d. Provide an evaluation of the effectiveness of actions taken to date;

    e. Provide updates to the initial list of mercury containing compounds discharged to the sanitary sewer; and

    f. Propose for approval new strategies and/or modifications to the current MRP to continue and improve mercury reduction efforts.

7. Any other conditions that the BPW deems necessary to ensure that mercury reduction efforts are effective in achieving the goals of this section.

Failure to submit an approvable MRP within 30 days of the required due date shall constitute significant noncompliance in accordance with this section, and will result in publication as a significant violator, in addition to other possible enforcement action.

A MRP may be evaluated for adequacy at any time by the BPW. If such an evaluation determines that the mercury reduction plan is inadequate, or the nondomestic user has not complied with its approved MRP, the nondomestic user will be notified. Failure to comply with the MRP requirement constitutes noncompliance. The BPW will follow its enforcement response plan (ERP) to ensure that corrective actions are taken.

A nondomestic user may request a release from MRP requirements if (i) all samples of the discharge for a period of one year are less than the specified MDL; (ii) the nondomestic user has complied with the minimum monitoring frequency of quarterly sampling events; and (iii) the BPW deems that MRP commitments have been fulfilled sufficiently to ensure continued compliance with the mercury limitation. The BPW shall notify the nondomestic user of any release from MRP requirements in writing.

If the MRP requirement is waived by the BPW, the nondomestic user remains subject to the local limitation for mercury in accordance with the requirements of this section.

Rediscovery of mercury in the nondomestic user discharge subjects said user to the submission of a new MRP, or escalation of enforcement in accordance with the ERP.

H. NOTIFICATION OF DISCHARGE VIOLATION

The permittee shall notify the BPW at (616) 355-1250 immediately upon any discharge that is in violation of discharge permit conditions or that could cause problems to the POTW, including slug discharges as outlined in the local ordinance. The notification shall include:

1. The date, time, location and duration of the discharge;

2. The type of waste including concentration and volume; and

3. Any corrective actions taken by the permittee.

Within five days following such a discharge the permittee shall submit a written report describing the cause of the discharge and the measures that will be taken by the user to prevent similar future discharges. The permittee shall also repeat the sampling and analysis and submit the results of the repeat analyses to the BPW within 30 days after becoming aware of the violation.

I. UPSET OR UNANTICIPATED BYPASS

The permittee shall notify the BPW within 24 hours of the first awareness of an upset or unanticipated bypass experienced by the permittee of its treatment that places the discharge in a temporary state of noncompliance with wastewater discharge limitations contained in this permit or other limitations specified in the local ordinance. A written report shall be submitted to the BPW within five (5) days of the occurrence, containing the following information:

1. A description of the discharge and cause of noncompliance/bypass;

2. The period of noncompliance including exact dates and times or, if not corrected, the anticipated time the noncompliance/bypass is expected to continue; and

3. The steps being taken and/or planned to reduce, eliminate, and prevent recurrence of the noncompliance/bypass.

J. SIGNIFICANT CHANGE IN DISCHARGE OR SEWER USE

The permittee shall notify the BPW prior to the introduction of new wastewater or pollutants or any significant change in sewer use or characteristic of the wastewater being introduced into the Holland Area Water Reclamation Facility system from the permittee's processes. Formal written notification shall be submitted prior to such an introduction. Significant change in sewer use is defined as an increase in the concentrations of pollutants discharged of 20% over those reported on the Wastewater Discharge Disclosure Report, or the increase in discharge volume of 1000 gallons/day or more than 10% over that reported on the Baseline Monitoring report/Wastewater Discharge Disclosure Report, whichever is less.

Any change which would violate categorical pretreatment standards or local limits is prohibited.

K. HAZARDOUS WASTE DISCHARGE REPORTING REQUIREMENT

The permittee shall notify the BPW, The Michigan Department of Environmental Quality, and the U.S. EPA-Region V of any discharge into the POTW of a substance which is considered a hazardous waste under 40 CFR Part 261. Notification is required within six (6) months of the commencement of discharge of the hazardous substance, or within six (6) months of the listing date of the hazardous substance, whichever is later.

L. SUBMITTAL OF REPORTS

All reports shall be submitted to the following address:

Holland BPW
Pollution Control Division
625 Hastings Ave.
Holland, Michigan 49423

PART VI - SPECIAL CONDITIONS/COMPLIANCE SCHEDULES

☐

☐

☑ C. Monthly Discharge Monitoring Report
On or before the 6th of each month, a surcharge monitoring report for the prior month is required for your facility as outlined in Part V.B of this permit.

☐

☑ E. Continuing Compliance Report
On January 15 and July 15 of each year, a Continuing Compliance Monitoring report as outlined in Part V.E of this permit is required for your facility.

☐

☐

☐

Appendix N

Proposed Restrictive Covenant (MWD Property)

DECLARATION OF RESTRICTIVE COVENANT

MDEQ Reference No.: RC-RMD-111____-____
Facility MID Number: MID 006 013 643
MDEQ Approval Date:_____

This Declaration of Restrictive Covenant ("Restrictive Covenant") has been recorded to protect public health, safety, welfare and the environment pursuant to the provisions of Part 111, Hazardous Waste Management, MCL 324.11101 et seq. (Part 111), and Part 201, Environmental Remediation, MCL 324.20101 et seq. (Part 201) of the Natural Resources and Environmental Protection Act ("NREPA"), 1994 PA 451, as amended.

This Restrictive Covenant has been recorded with the Ottawa County Register of Deeds for the purpose of prohibiting or restricting certain uses/activities that could result in unacceptable exposure to soil and ground water contamination and to prevent damage or disturbance of exposure controls that will be relied upon to restrict exposures at the property legally described in Exhibit 1 and located at 260 Howard Avenue, Holland Township, Ottawa County ("Property"). The Property is a "facility" as that term is defined in Section 20101(1)(s) of Part 201 of NREPA due to the presence of hazardous substances in soil and ground water at concentrations greater than those allowed for unrestricted residential use as defined in Part 201. A listing of the hazardous substances detected in soil and ground water on the Property is provided in Exhibit 2. The hazardous substances detected on the Property are located at least three feet below the ground surface and therefore do not pose an exposure risk for activities occurring above ground.

Hazardous substances in soil and ground water at the Property have been investigated and remediated in accordance with a remediation plan titled *Remedial Action Plan/Corrective Measures Implementation Plan, Warner Lambert Company Former Manufacturing Facility, 188 Howard Avenue, Holland Township, Michigan,* dated April 21, 2104 as revised through June 12, 2014 (the "Remediation Plan") which was approved by the Michigan Department of Environmental Quality ("MDEQ") on June 20, 2014 pursuant to Parts 111 and 201 of NREPA. The Remediation Plan may be obtained by contacting the MDEQ. The Remediation Plan includes recommended health and safety and residual management protocols for subsurface work at the Property.

The land and resource use restrictions contained in this Restrictive Covenant are based upon information available at the time the remediation was completed. Discovery of environmental conditions that were not accounted for during completion of the remediation or use of the Property in a manner inconsistent with the restrictions described herein may result in risks to public health, safety, and welfare.

The Exhibits to this Restrictive Covenant include a legal description and a graphical survey of the subject Property prepared by a licensed surveyor (Exhibit 1) and a list of hazardous substances detected in soil and ground water at the site (Exhibit 2).

Definitions

"Existing Ground Surface" means the elevation of the pavement, top soil, lawn and landscaping that exists on the Property as of the date of recording of this Declaration of Restrictive Covenant. The Existing Ground Surface is topographically depicted and labeled in Exhibit 2.

"Hazardous Substance" means hazardous waste as defined under Part 111, hazardous substances as defined under Part 201 and CERCLA (42 USC 9601 to 9675), and petroleum as defined under Part 213.

"MDEQ" means the Michigan Department of Environmental Quality, its successor entities, and those persons or entities acting on its behalf.

"Owner" means at any given time the then current title holder of the Property or any portion thereof.

"Part 111" means Part 111, Hazardous Waste Management, of NREPA, 1994 PA 451, as amended, MCL 324.11101 et seq.

"Part 201" means Part 201, Environmental Remediation, of NREPA, 1994 PA 451, as amended, MCL 324.20101 et seq.

"Property" means the land area that is subject to this Restrictive Covenant as described in Exhibit 1.

"Remediation Plan" means the *Remedial Action Plan/Corrective Measures Implementation Plan, Warner Lambert Company Former Manufacturing Facility, 188 Howard Avenue, Holland Township, Michigan* (April 21, 2014 as revised through June 12, 2014).

Declaration of Use Restrictions

NOW THEREFORE, the Macatawa Warehouse Development LLC hereby imposes, pursuant to Parts 111 and 201 of NREPA, the following restrictions on the Property and covenants and agrees that:

1. Land Use Restriction. The Owner shall restrict the Property to those uses compatible with the ***limited non-residential land use category*** as defined in Section 20120a(1)(d) of Part 201 of NREPA, as amended, or other uses that are consistent with the assumptions and bases for the cleanup criteria established pursuant to 20120a(1)(d). Without limiting the foregoing, the following uses are expressly prohibited: single family homes, mobile homes, multi-family apartments or condominiums, day care centers, nursing homes, schools for children, and hospitals.

2. Maintenance of Existing Surface Cover. The Owner shall maintain the level of the Existing Ground Surface on the Property in order to protect against direct contact with, and erosion from, contaminated subsurface soil. Ground surface materials (pavement, topsoil, lawn, landscaping, etc.) may be supplemented, removed or replaced with the same or different materials, so long as the elevation of the Existing Ground Surface remains the same or is made higher.

3. Subsurface Worker Health and Safety Precautions. All subsurface work performed on the Property at depths greater than three feet below the Existing Ground Surface shall be conducted pursuant to a location- and task-specific health and safety plan describing the precautions to be implemented during subsurface work to prevent unacceptable exposures to impacted media in compliance with applicable OSHA/MIOSHA regulations and the requirements of Section 20107a of NREPA. Use of nuisance-level personal protective equipment, such as long pants, long sleeve shirts, boots, and gloves, is recommended. A recommended worker health and safety protocol for the Property is on file with the MDEQ (Appendix S to the Remediation Plan).

4. Wells Prohibited. The Owner shall prohibit the construction of wells or other devices on the Property to extract ground water for consumption, irrigation, or any other use. This provision does not prohibit installation of wells for: environmental study, monitoring, or remediation, or dewatering of excavations, provided the installation and operation of such wells is in compliance with applicable federal, state, and local laws and regulations and the fluids are managed in accordance with the requirements of Section 20107a of NREPA and other applicable local, state and federal laws and regulations.

5. Construction of Surface Water Features Prohibited. The Owner shall prohibit the construction of surface water features (e.g., ponds, wetlands, storm water detention basins, etc.) on the Property that are in hydrologic communication with ground water.

6. Contaminated Soil Management. The Owner shall manage soil excavated on the Property in accordance with Section 20120c of Part 201 and the following additional site-specific requirements.

    a. Soil excavated from depths less than three feet below Existing Ground Surface may be: (i) returned to the excavation; or (ii) disposed off-site in accordance with the requirements of Part 111 and any other applicable state and federal laws.

b. Soil excavated from depths greater than three feet below Existing Ground Surface may be: (i) returned to the excavation provided that they are covered with at least three feet of clean imported fill or soil previously removed from the top three feet of the excavation; or (ii) transported off-site for disposalin accordance with the requirements of Part 111and any other applicable state and federal laws.

c. Soil from any depth that evidences visual or olfactory indications of contamination must be managed off-site in accordance with the requirements of Part 111 and any other applicable state and federal laws.

A recommended residual management protocol for the Property is on file with the MDEQ (Appendix S to the Remediation Plan).

7. Interference with Remedial Activities. The Owner shall restrict activities at the Property that may interfere with any remedial action/corrective action activities, or the operation and maintenance, monitoring, or other measures necessary to assure the effectiveness and integrity of any remedial action/corrective action activities.

8. Access. The Owner shall grant to Pfizer Inc., the MDEQ, and their designated representatives the right to enter the Property at reasonable times for the purpose of determining and monitoring compliance with this Restrictive Covenant, taking groundwater and soil samples, and inspecting remedial/corrective action activities.

9. Notice of Intent to Convey Interest. The Owner shall provide notice to Pfizer Inc. and the MDEQ of the Owner's intent to convey any interest in the Property 14 days prior to consummating the conveyance; provided, however, that so long as the Property comprises a condominium, such notice shall not be required in case of any conveyance of an interest in a condominium unit in a transaction that does not involve the conveyance of all or substantially all of the Property. A conveyance of title, an easement, or other interest in the Property shall not be consummated by the Property Owner without adequate and complete provision for compliance with the terms and conditions of this Covenant.

10. Term and Enforcement of Restrictive Covenant. This Restrictive Covenant shall run with the Property and shall be binding on the Owner; future owners; and all current and future successors, lessees, easement holders, their assigns, and their authorized agents, employees, or persons acting under their direction and control. This Restrictive Covenant is enforceable by the MDEQ or Pfizer Inc. by an action seeking specific performance or other legal remedy in a court of competent jurisdiction against Owners of all or part of the Property. All remedies available hereunder shall be in addition to any and all other remedies at law or equity.

11. Severability. If any provision of this Restrictive Covenant is held to be invalid by any court of competent jurisdiction, the invalidity of such provision shall not affect the validity of any other provisions hereof, and all such other provisions shall continue unimpaired and in full force and effect.

12. Authority to Execute Restrictive Covenant. The undersigned person executing this Restrictive Covenant is the Owner, or has the express written permission of the Owner and all other holders of a legal interest whose interest is materially affected by this Restrictive Covenant and represents and certifies that he or she is duly authorized and has been empowered to execute and deliver this Restrictive Covenant.

13. Modification. Pfizer Inc. and/or the Owner may request in writing to the MDEQ modifications to, or rescission of, this instrument, based on the performance of additional remedial/corrective action activities on the Property, changes to cleanup criteria or standards, or changes in use. This Restrictive Covenant may be modified or rescinded only with written approval of the MDEQ. Any modification or rescission shall be filed with the Ottawa County Register of Deeds by the Owner and a certified copy shall be provided to MDEQ.

14. Notices. Any notice required to be made to Pfizer Inc. shall be made by certified letter or overnight delivery service (e.g., Federal Express) to:

President, Parke, Davis & Company LLC
c/o Pfizer Global Manufacturing
235 East 42nd Street 685/5/4
New York, NY 10017-5755

IN WITNESS WHEREOF,

The said Owner of the Property has caused this restrictive covenant, RC-RMD-111-____-____ to be executed on this _____ day of _____, 2014.

_____ _____
Authorized Representative Signature Date

_____
Name (Type or Print Name)

John Van Den Bos
Macatawa Warehouse Development LLC
260 Howard Avenue
Holland Township, Michigan

STATE OF MICHIGAN

COUNTY OF OTTAWA

The foregoing instrument was acknowledged before me this _____ day of _____, 2014, by _____, on behalf of Holland Charter Township.

_____
Notary Public

_____
(Print or type name)

My Commission Expires: _____

PREPARED BY AND RETURN TO:

Allen J. Reilly, Jr.
Horizon Environmental
4771-50th St., SE
Grand Rapids, Michigan 49512

EXHIBIT 1

LEGAL DESCRIPTION/BOUNDARY SURVEY OF PROPERTY

EXHIBIT 2

LIST OF HAZARDOUS SUBSTANCES DETECTED ON THE PROPERTY

("X" indicates substance was detected on one or more occasion)

Hazardous Substance	CAS Number	Soil	Ground Water
Arsenic	7440-38-2	X	X
Barium	7440-39-3	X	X
Cadmium	7440-43-9	X	-
Chromium, Total	7440-47-3	X	-
Copper	7440-50-8	X	-
Lead	7439-92-1	X	-
Mercury, Total	7439-97-6	X	-
Selenium	7782-49-2	X	X
Silver	7440-22-4	X	-
Zinc	7440-66-6	X	-
Nitrogen, Ammonia	7664-41-7	-	X
Aroclor 1248	12672-29-6	X	-
Anthracene	120-12-7	X	-
Benzo(a)anthracene	56-55-3	X	-
Benzo(a)pyrene	50-32-8	X	-
Benzo(b)fluoranthene	205-99-2	X	-
Benzo(g,h,i)perylene	191-24-2	X	-
Benzo(k)fluoranthene	207-08-9	X	-
Benzophenone	119-61-9	X	-
bis(2-Ethylhexyl)phthalate	117-81-7	X	-
Chrysene	218-01-9	X	-
5,5-Diphenylhydantoin	57-41-0	X	X
Fluoranthene	206-44-0	X	-
Indeno(1,2,3-cd)pyrene	193-39-5	X	-
Phenanthrene	85-01-8	X	-
Phenol	108-95-2	-	X
Pyrene	129-00-0	X	-
Acetone	67-64-1	X	-
Benzene	71-43-2	-	X
Chlorobenzene	108-90-7	X	X
Methylene chloride	75-09-2	X	-
Toluene	108-88-3	-	X
Xylene, Total	1330-20-7	X	-

Appendix O

Post-Closure Cost Estimate Work Sheets

Table 1
Post-Closure Care Cost Estimate
Warner-Lambert Company, LLC, Holland, Michigan
MID 006 013 643

Item No.	Task Description	Estimated Cost
1.	**Hydraulic Containment System Operation & Maintenance** (Funds sufficient for disposal of extracted water via either existing Deep Well or POTW)	**$8,790,000**
2.	**Hydraulic Containment System Performance Monitoring**	**$400,000**
3.	**Inspection, Maintenance, and Ecological Protection**	**$870,000**
	Total Estimated Cost:	**$10,060,000**

Table 1-1a
Post-Closure Cost Estimate
Hydraulic Containment System Operation & Maintenance at Plant Site (Alternate GWTS)
Warner-Lambert Company, LLC, Holland, Michigan
MID 006 013 643

Item No.	Task Description	Quantity	Unit	Unit Rate	Estimated Annual Cost
1.	**Labor (routine plus alarm response)**				
	Operating Labor	624	HR	$80	$49,900
	Supervision	208	HR	$120	$25,000
	Operational Reporting	64	HR	$120	$7,700
				Task Total	**$82,600**
2.	**Maintenance and Repair**				
	Maintenance and Repair Labor Parts & Supplies	600	HR	$80	$48,000
	Maintenance and Repair-Parts & Supplies	1	LS	$21,000	$21,000
				Task Total	**$69,000**
3.	**Analytical**				
	Testing per BPW Permit	4	EA	$600	$2,400
	Misc. analytical	1	LS	$2,400	$2,400
				Task Total	**$4,800**
4.	**Utilities** *(at average flow rate=15 gpm)*				
	Electric	1,088,640	KWH/yr	$0.085	$92,600
	Phone Service	1	LS	$1,500	$1,500
	Water	1	LS	$500	$500
	Holland BPW Discharge Fees	12	Months	$251	$3,000
	Holland Charter Township Monthly Fees	12	Months	$29	$400
	Holland Charter Township Commodity Charge	7,776	1,000 gal	$2.51	$19,600
				Task Total	**$117,600**
5.	**Other Costs**				
	Chemical - 48.8% Aluminum Sulfate	660	gallons	$3	$1,980
	Chemical - 50% Caustic	2,700	gallons	$4	$10,800
	Chemical - Polymer Flocculant	200	gallons	$5	$1,000
	Chemical - 40% Sodium Bisulfite	30	gallons	$6	$180
	GAC Replacement	1,400	lbs	$3	$4,200
	Waste Disposal (Solids)	24	tons	$50	$1,200
				Task Total	**$19,360**
				Total Estimated Annual Cost:	**$293,000**
				Anticipated Duration (yr)	**30**
				Total Estimated Cost:	**$8,790,000**

Printed: 5/10/2022

Table 1-1b
Post-Closure Cost Estimate
Hydraulic Containment System Operation & Maintenance at Plant Site (Existing Deep Well System)
Warner-Lambert Company, LLC, Holland, Michigan
MID 006 013 643

Item No.	Task Description	Quantity	Unit	Unit Rate	Estimated Annual Cost
1.	**Labor (routine plus alarm response)**				
	Operating Labor	360	HR	$80	$28,800
	Supervision	130	HR	$120	$15,600
				Task Total	**$44,400**
2	**Labor (system reporting)**				
	Operating Labor	84	HR	$80	$6,720
	Supervision	100	HR	$120	$12,000
				Task Total	**$18,720**
3.	**Maintenance and Repair**				
	Maintenance & Repair Labor, Parts and Supplies	1	LS	$16,500	$16,500
	Extraction Well Redevelopment *(5 wells every 3 yrs)*	1	LS	$10,000	$10,000
	Deep Well Mechanical Integrity Test *(2 wells annually)*	1	LS	$90,000	$90,000
	Deep Well Batching	1	LS	$18,500	$18,500
	Deep Well Refurbishment *(annualized at 1 well every 5 years)*	1	LS	$50,000	$50,000
				Task Total	**$185,000**
4.	**Analytical**				
	Injectate Testing per WAP in UIC Permit (Quarterly)	4	EA	$1,000	$4,000
	Misc. Analytical	1	LS	$500	$500
				Task Total	**$4,500**
5.	**Utilities**				
	Electric (@ 600 psi Injection Pressure)	1	LS	$13,500	$13,500
	Nitrogen	1	LS	$5,000	$5,000
	Phone Service	1	LS	$2,250	$2,250
	Water/Sewer	1	LS	$1,250	$1,250
				Task Total	**$22,000**
6.	**Other Costs**				
	Regulatory Permits (UIC)	1	LS	$5,000	$5,000
	Waste Disposal (Filter Media and PPE)	1	LS	$1,000	$1,000
				Task Total	**$6,000**
				Total Estimated Annual Cost:	**$262,000**
				Anticipated Duration (yr)	**30**
				Total Estimated Cost:	**$7,860,000**

Table 1-2
Post-Closure Cost Estimate
Performance Monitoring Plan (PMP) for the Hydraulic Containment System at Plant Site
Warner-Lambert Company, LLC, Holland, Michigan
MID 006 013 643

Item No.	Task Description	Quantity	Unit	Unit Rate	Estimated Annual Cost
1.	**Hydraulic Monitoring (Monthly)**				
	Measure GW Elevations at 11 piezometer pairs	24	HR	$80	$1,920
	Contingency for response to reduced gradient condition	24	HR	$80	$1,920
				Task Total	**$3,840**
2.	**Data Management/Reporting (Quarterly)**				
	Data Management & Reporting	32	HR	$120	$3,840
	Prepare Three (3) Quarterly and One (1) Annual Report	48	HR	$120	$5,760
				Task Total	**$9,600**
				Total Estimated Annual Cost:	**$13,440**
				Anticipated Duration (yr)	**30**
				Total Estimated Cost:	**$400,000**

Table 1-3
Post-Closure Care Cost Estimate
Inspection, Maintenance, Ecological Protection and Associated Reporting
Warner-Lambert Company, LLC, Holland, Michigan
MID 006 013 643

Item No.	Task Description	Quantity	Unit	Unit Rate	Estimated Annual Cost
1.	**Site Inspection/Management**				
	Inspect Access Restrictions/Soil Cover (4X/yr)	16	HR	$80	$1,280
	Coordinate H&S and Residuals Mgt. Protocols	36	HR	$80	$2,880
				Task Total:	**$4,160**
2.	**Site Maintenance**				
	Allowance for Repair/Replacement of Soil Cover/Liner *(assumes restoration of 1,000 ft^2 of cover every 3 years)*	1	LS	$2,500	$2,500
	Allowance for Repair/Replacement of Fence *(assumes repair of 100 lineal ft of fence every 5 years)*	1	LS	$500	$500
	Allowance for Shoreline Repair *(10% of installed cost pro-rated per annum for 30 years)*	1	LS	$2,800	$2,800
	Mowing/Snow Clearing	1	LS	$15,000	$15,000
				Task Total:	**$20,800**
3.	**Ecological Protection**				
	Wildlife Inspection/Removal	1	LS	$2,500	$2,500
				Task Total:	**$2,500**
4.	**Reporting**				
	Prepare Progress Reports (2X/yr)	16	HR	$90	$1,440
				Task Total:	**$1,440**
				Total Estimated Annual Cost:	**$28,900**
				Anticipated Duration (yr)	**30**
				Total Estimated Cost:	**$870,000**

Printed: 5/10/2022

Table 2
Cost Estimate for Remaining Corrective Action Activities
Warner-Lambert Company, LLC, Holland, Michigan
MID 006 013 643

Item No.	Task Description	Estimated Cost
1.	**LNAPL Monitoring & Management**	**$44,000**
2.	**Off-Site Groundwater Monitoring (MSU, MWD, Park Properties)**	**$50,000**
	Total Estimated Cost:	**$94,000**

Table 2-1
Corrective Action Cost Estimate
LNAPL Monitoring & Management at Plant Site
Warner-Lambert Company, LLC, Holland, Michigan
MID 006 013 643

Item No.	Task Description	Quantity	Unit	Unit Rate	Estimated Annual Cost
1.	**LNAPL Monitoring and Management**				
	Confined LNAPL Condition (water level >577 ft MSL)				
	LNAPL Monitoring/Recovery	6	HR	$80	$480
	Data Management/Reporting	8	HR	$120	$960
	Expenses (travel, PPE, sampling equip.)	1	LS	$200	$200
				Total Estimated Annual Cost:	**$1,600**
				Anticipated Duration (yr)	**5**
				Total Estimated Cost (confined NAPL Condition):	**$8,000**
	Unconfined LNAPL Condition (water level <577 ft MSL)				
	LNAPL Monitoring/Recovery	150	HR	$80	$12,000
	Data Management/Reporting	40	HR	$120	$4,800
	Expenses (travel, PPE, sampling equip.)	1	LS	$1,000	$1,000
				Total Estimated Annual Cost:	**$18,000**
				Anticipated Duration (yr)	**2**
				Total Estimated Cost (unconfined NAPL Condition):	**$36,000**
				TOTAL ESTIMATED COST	**$44,000**

Table 2-2
Corrective Action Cost Estimate
Off-Site GW Monitoring and Implementation of PCOI RA Framework
Warner-Lambert Company, LLC, Holland, Michigan
MID 006 013 643

Item No.	Task Description	Quantity	Unit	Unit Rate	Estimated Annual Cost
1.	**Annual Groundwater Monitoring (Annually at 7 locations with QA/QC samples)**				
	Groundwater Sampling	30	HR	$80	$2,400
		8	HR	$120	$960
	Expenses (travel, PPE, sampling equipment)	1	LS	$500	$500
	Laboratory Analyses	10	Chlorobenzene	$60	$600
		10	Phenytoin	$125	$1,250
				Task Total	**$5,710**
2.	**Data Validation/Evaluation/Reporting**	24	HR	$80	$1,920
		18	HR	$120	$2,160
				Task Total	**$4,080**
				Total Estimated Annual Cost:	**$10,000**
				Anticipated Duration (yr)	**5**
				Total Estimated Cost:	**$50,000**

Appendix P

Financial Assurance Mechanism

STATE OF MICHIGAN
DEPARTMENT OF
ENVIRONMENT, GREAT LAKES, AND ENERGY
LANSING

GRETCHEN WHITMER
GOVERNOR

LIESL EICHLER CLARK
DIRECTOR

May 19, 2021

VIA E-MAIL AND U.S. MAIL

Mr. Thomas Donohue, Senior Manager
Global Engineering
Pfizer, Inc.
100 Route 206 North
Peapack, New Jersey 07977

Dear Mr. Donohue:

SUBJECT: In Compliance Determination: Financial Assurance for Post-Closure Care and Corrective Action; Warner-Lambert Company LLC (Warner Lambert); Holland, Michigan; MID 006 013 643; Waste Data System Number 393958

On April 30, 2021, the Michigan Department of Environment, Great Lakes, and Energy (EGLE), Materials Management Division (MMD), conducted a financial record review (FRR) of the April 3, 2020, Parke-Davis & Company, LLC (Warner Lambert), Annual RCRA Financial Assurance submittal, and the April 8, 2021, Amendments to Irrevocable Standby Letter of Credits, provided by Svenska Handelsbanken, New York Branch, for Pfizer, Inc., on behalf of Warner Lambert, to demonstrate financial assurance for post-closure care and corrective action at the facility located at 188 Howard Avenue, Holland, Michigan.

Warner-Lambert's establishment of the written cost estimate and financial assurance are required by Rule (R) 299.9702, R 299.9703, R 299.9712, and R 299.9713 of the administrative rules promulgated pursuant to Part 111, Hazardous Waste Management, of the Michigan Natural Resources and Environmental Protection Act, 1994 PA 451, as amended, and the Post-Closure Plan, approved May 8, 2015.

Based on the FRR, the MMD hereby determines that Warner Lambert is in compliance with the Part 111 financial assurance requirements.

If you have any questions, please contact Mr. Ricardo Jaimes, Environmental Quality Analyst, Permit and Corrective Action Unit, Hazardous Waste Section, MMD, at 517-388-3429; JaimesR@Michigan.gov; or EGLE, MMD, P.O. Box 30241, Lansing, Michigan 48909-7741.

Sincerely,

Mr. James Ferritto, Acting Supervisor
Permit and Corrective Action Unit
Hazardous Waste Section
Materials Management Division
231-878-0962

cc: Mr. Gareth J. Port, Environmental Health and Safety, GE Pfizer, Inc.
Ms. Kimberly Tyson, EGLE
Mr. Fred Sellers, EGLE
Mr. Andrew Bertapelle, EGLE
Mr. Ricardo Jaimes, EGLE
HWS/C&E File

Gareth J. Port
Manager
Environmental & Sustainability Law

Pfizer Inc.
235 East 42nd Street, New York, NY 10017
Tel 212 733 2814 Fax 646 487 9163
gareth.port@pfizer.com

April 8, 2021

BY U.S.P.S. EXPRESS MAIL

Liesl Eichler Clark
Director
Michigan Department of Environment, Great Lakes, and Energy
c/o Materials Management Division
Hazardous Waste Section
Constitution Hall
525 West Allegan Street
P.O. Box 30241
Lansing, MI 48909-7741

Warner-Lambert Company LLC
c/o Thomas Donohue, Senior Manager
Global Engineering, Pfizer Inc.
100 Route 206 North
Peapack, NJ 07977

Re: Parke-Davis & Company LLC (Warner-Lambert Company LLC) (Holland, MI)
Annual RCRA Financial Assurance
188 Howard Avenue, Holland, Michigan 49423
EPA ID # MID006013643

Dear Ms. Clark and Mr. Donohue:

Pfizer Inc. is writing on behalf of Warner-Lambert Company LLC (Warner-Lambert Company LLC's ultimate corporate parent is Pfizer Inc.) to provide the following cost estimates:

	Current Cost Estimate	Mechanism(s)	Mechanism Amount
Post-Closure Care	$10,196,893	Letter of Credit # S16058	$10,793,652
Corrective Action	$2,960,186	Letter of Credit # S16061	$3,133,427

Letters of Credit No. S16058 and S16061, provided by Svenska Handelsbanken, New York Branch, were previously submitted to satisfy the above-referenced financial assurance requirements.

Letters of Credit No. S16058 and S16061 are maintained in amounts ("Mechanism Amount") that exceed the current cost estimate ("Current Cost Estimate") to account for projected inflation.

If you have any questions, please feel free to contact me at your convenience.

Sincerely,

Gareth J. Port

Manager
Environmental & Sustainability Law, Pfizer Inc.

Enclosure(s)

cc: Cheryl Newton
Acting Regional Administrator
U.S. Environmental Protection Agency, Region V
77 West Jackson Boulevard
Chicago, IL 60604-3590

Fred Sellers
Michigan Department of Environment, Great Lakes, and Energy
350 Ottawa Avenue, N.W., Unit 10
Grand Rapids, MI 49503-2341

Kimberly Tyson
Chief, Hazardous Waste Section
Michigan Department of Environment, Great Lakes, and Energy
Materials Management Division
350 Ottawa Avenue, N.W., Unit 10
Grand Rapids, MI 49503-2341