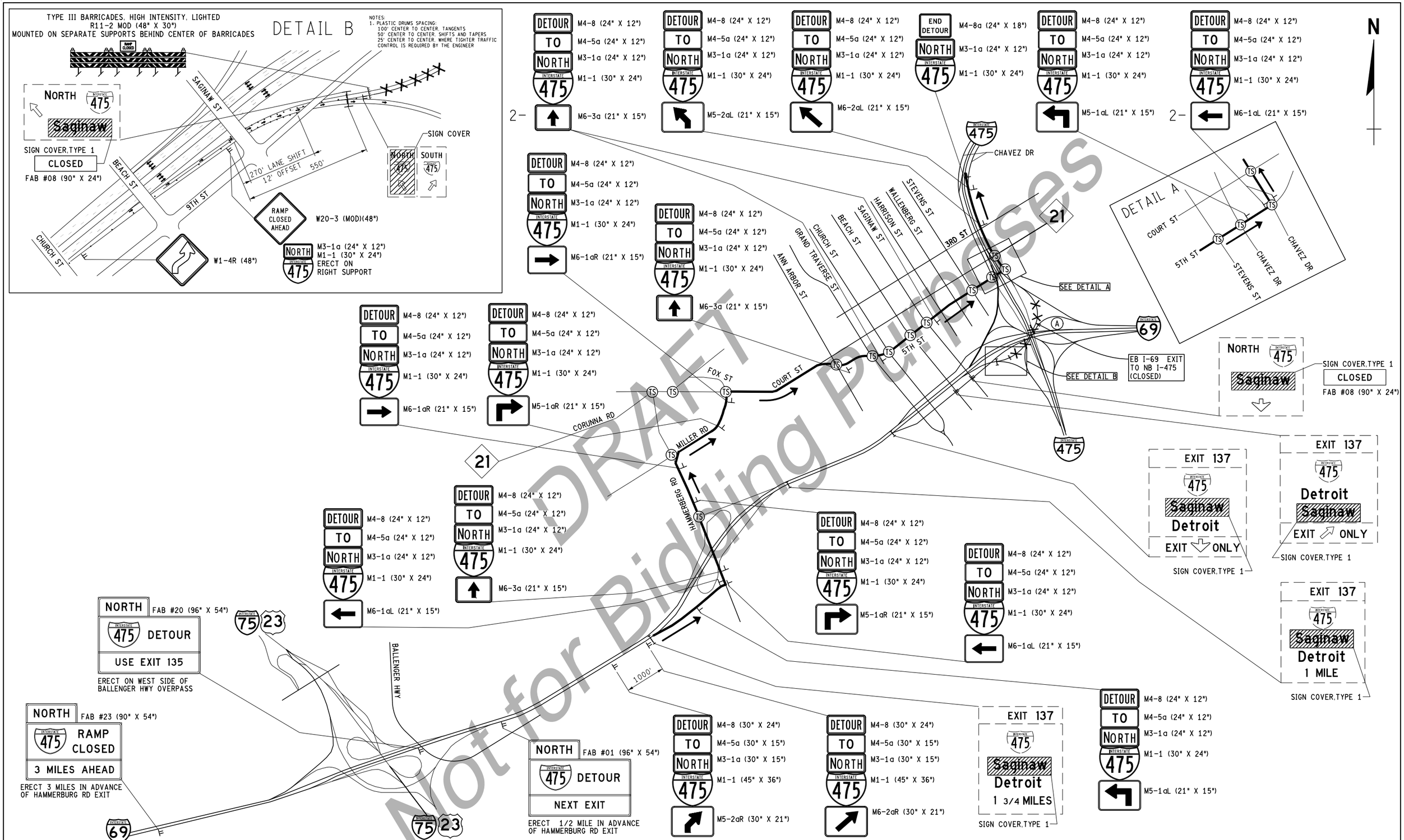

FINAL ROW PLAN REVISIONS (SUBMITTAL DATE:)							
NO.	DATE	AUTH	DESCRIPTION	NO.	DATE	AUTH	DESCRIPTION

AECOM

MDOT Michigan Department of Transportation

NO SCALE

FILE: 132026_I-69_MTDETR001.dgn

DATE: 07/27/20
DESIGN UNIT: BLOCK
TSC: DAVISON

CS: 25084, 25085
JN: 132026

MAINTAINING TRAFFIC DETOUR PLAN
DETOUR #1
EB I-69 RAMP TO NB I-475 RAMP

DRAWING: I-69 MOT

SHEET: SECT 1 130

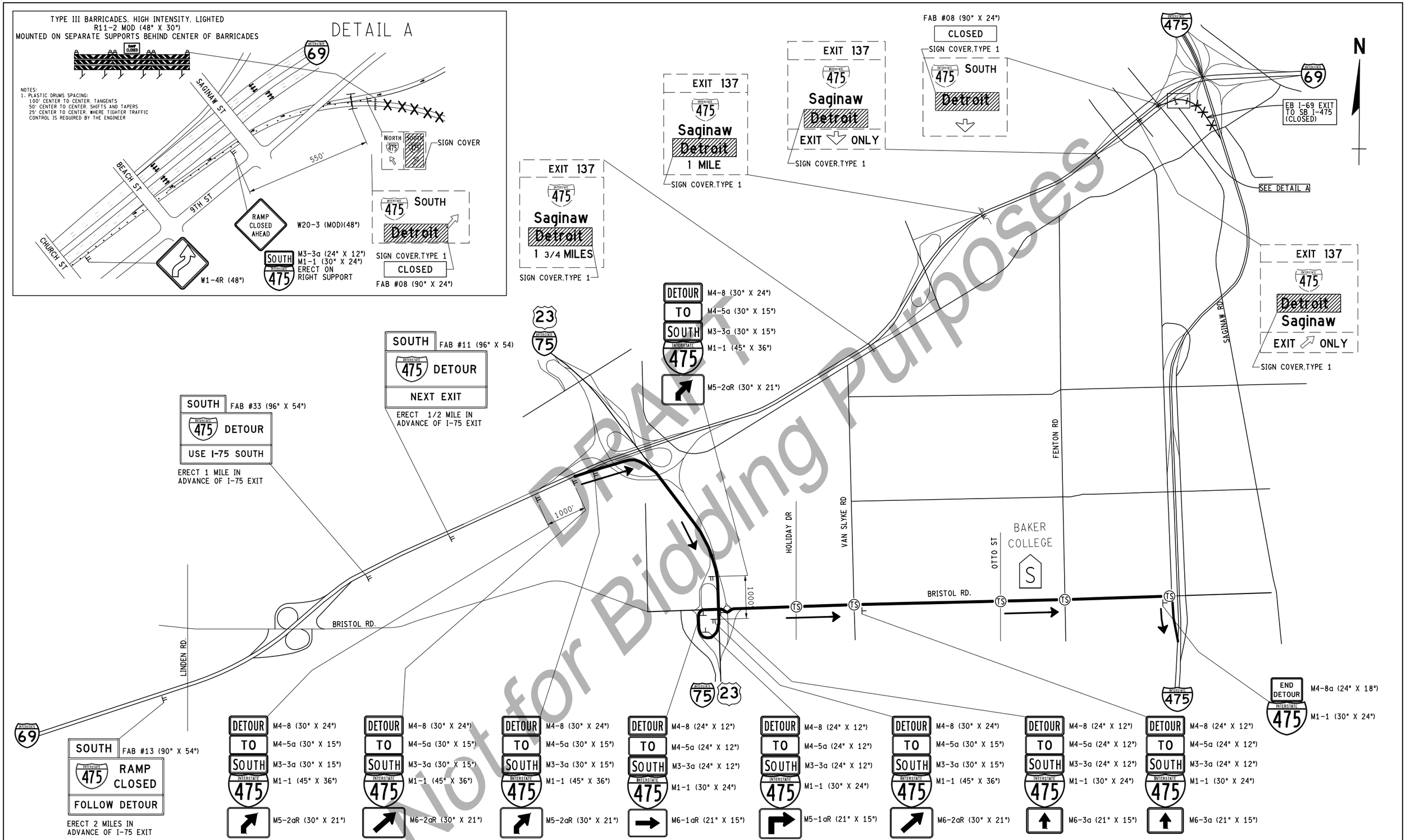

FINAL ROW PLAN REVISIONS (SUBMITTAL DATE:)							
NO.	DATE	AUTH	DESCRIPTION	NO.	DATE	AUTH	DESCRIPTION

AECOM

MDOT Michigan Department of Transportation

NO SCALE

FILE: 132026_I-69_MTDETR002.dgn

DATE: 07/27/20
DESIGN UNIT: BLOCK
TSC: DAVISON

CS: 25084, 25085
JN: 132026

MAINTAINING TRAFFIC DETOUR PLAN
DETOUR #2
EB I-69 RAMP TO SB I-475

DRAWING: I-69 MOT
SHEET: SECT 1

NOTE TO CONTRACTOR:

1. WHEN THE RAMPS FROM WESTBOUND I-69 TO NORTHBOUND I-475 AND SOUTHBOUND I-475 ARE BOTH CLOSED, ELIMINATE THE "NORTH" PANEL (FAB #01) AND COMBINE DETOUR #2 AND DETOUR #4.

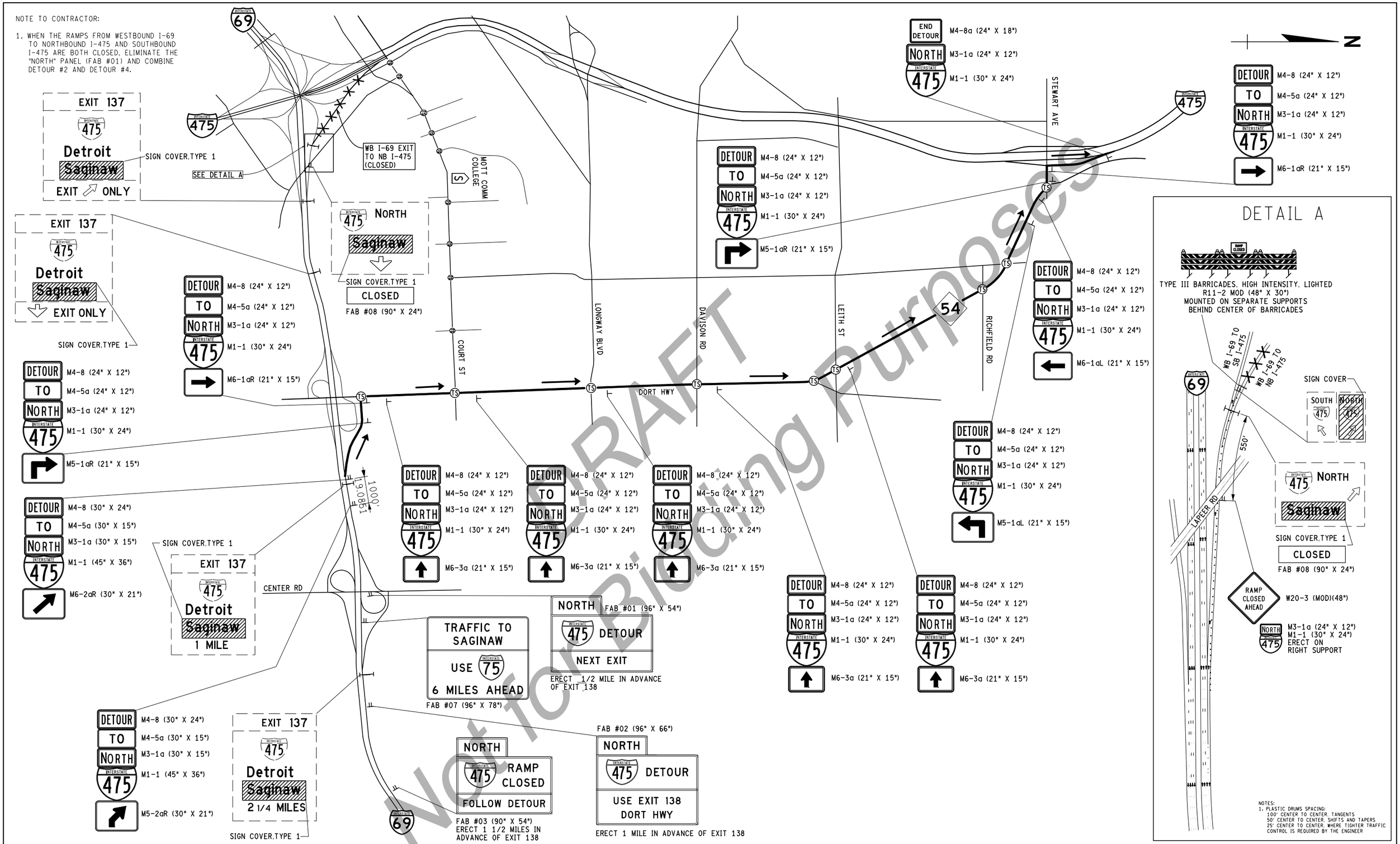

DRAFT
Not for Bidding Purposes

FINAL ROW PLAN REVISIONS (SUBMITTAL DATE:)							
NO.	DATE	AUTH	DESCRIPTION	NO.	DATE	AUTH	DESCRIPTION

AECOM

MDOT Michigan Department of Transportation

NO SCALE

FILE: 132026_I-69_MTDETR003.dgn

DATE: 07/27/20
DESIGN UNIT: BLOCK
TSC: DAVISON

CS: 25084, 25085
JN: 132026

MAINTAINING TRAFFIC DETOUR PLAN
DETOUR #3
WB I-69 RAMP TO NB I-475

DRAWING: I-69 MOT
SHEET: SECT 1 132

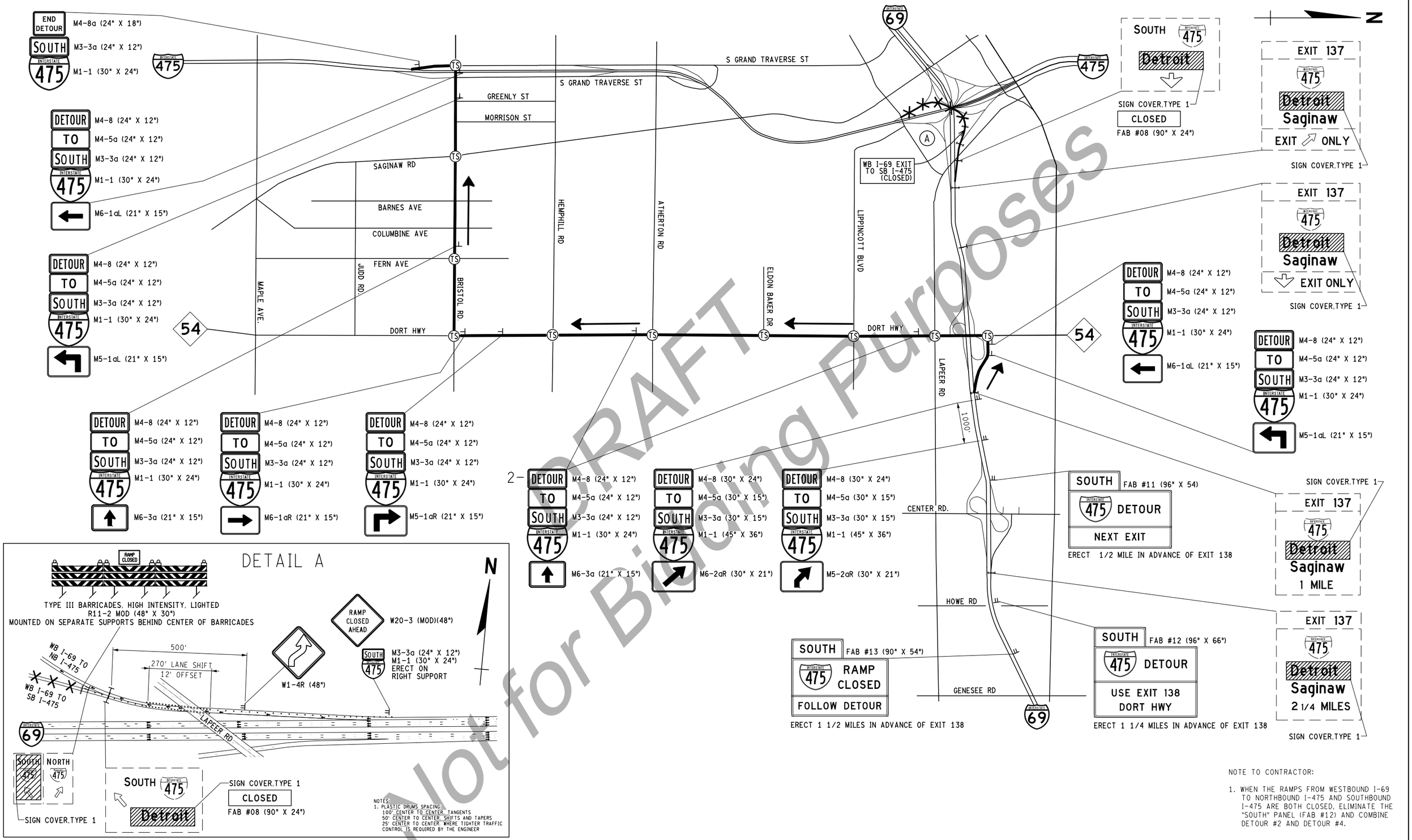

DRAFT
Not for Binding Purposes

NOTE TO CONTRACTOR:

1. WHEN THE RAMPS FROM WESTBOUND I-69 TO NORTHBOUND I-475 AND SOUTHBOUND I-475 ARE BOTH CLOSED, ELIMINATE THE "SOUTH" PANEL (FAB #12) AND COMBINE DETOUR #2 AND DETOUR #4.

FINAL ROW PLAN REVISIONS (SUBMITTAL DATE:)							
NO.	DATE	AUTH	DESCRIPTION	NO.	DATE	AUTH	DESCRIPTION

AECOM

MDOT Michigan Department of Transportation

NO SCALE

FILE: 132026_I-69_MTDETR004.dgn

DATE: 07/27/20
DESIGN UNIT: BLOCK
TSC: DAVISON

CS: 25084, 25085
JN: 132026

MAINTAINING TRAFFIC DETOUR PLAN
DETOUR #4
WB I-69 RAMP TO SB I-475

DRAWING: I-69 MOT
SHEET: SECT 1 133

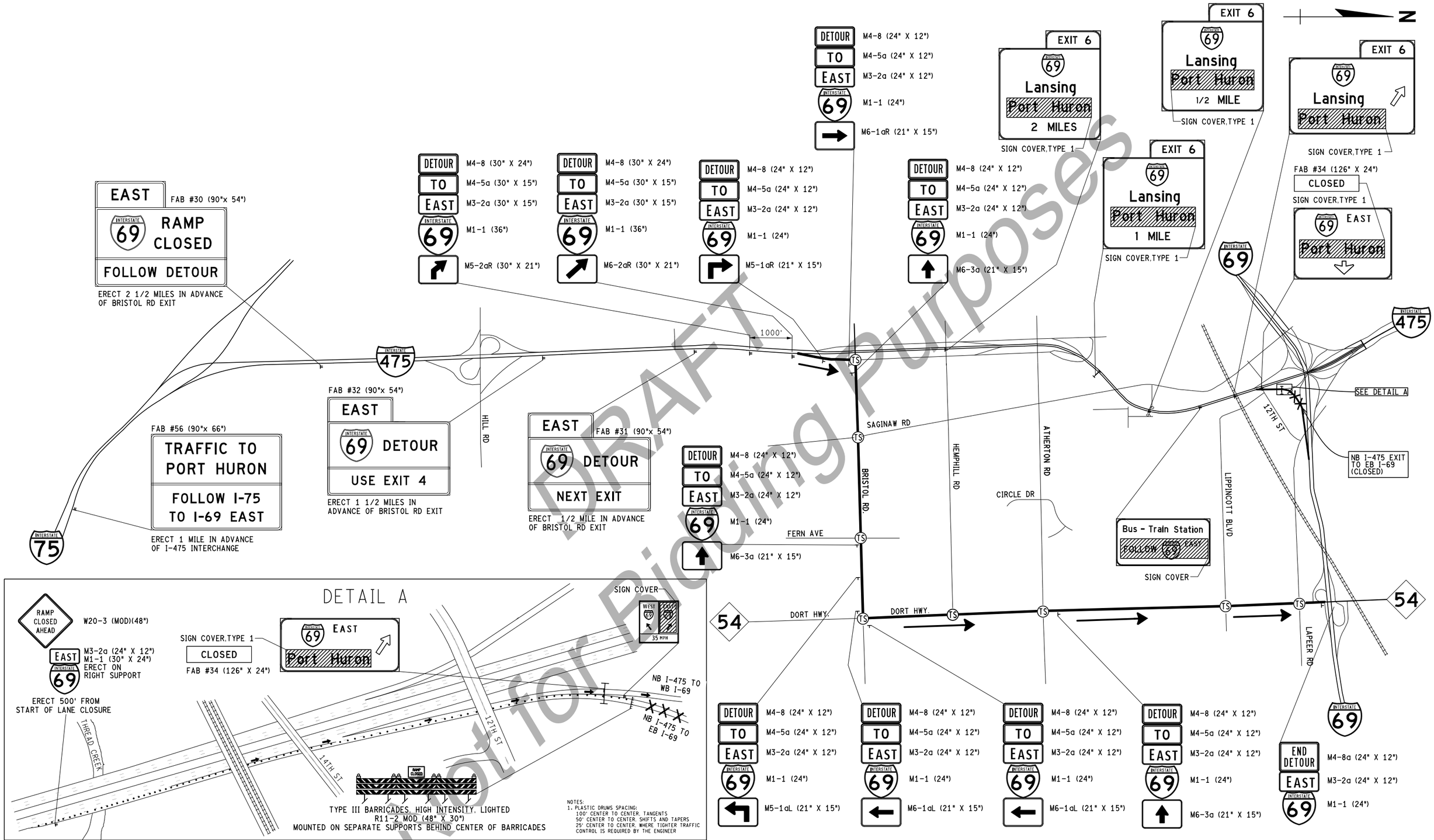

DRAFT
Not for Bidding Purposes

FINAL ROW PLAN REVISIONS (SUBMITTAL DATE:)							
NO.	DATE	AUTH	DESCRIPTION	NO.	DATE	AUTH	DESCRIPTION

AECOM

MDOT Michigan Department of Transportation

NO SCALE

FILE: 132026_I-69_MTDETR005.dgn

DATE: 07/27/20
DESIGN UNIT: BLOCK
TSC: DAVISON

CS: 25084, 25085
JN: 132026

MAINTAINING TRAFFIC DETOUR PLAN
DETOUR #5
NB I-475 RAMP TO EB I-69

DRAWING: I-69 MOT

SHEET: SECT 1 134

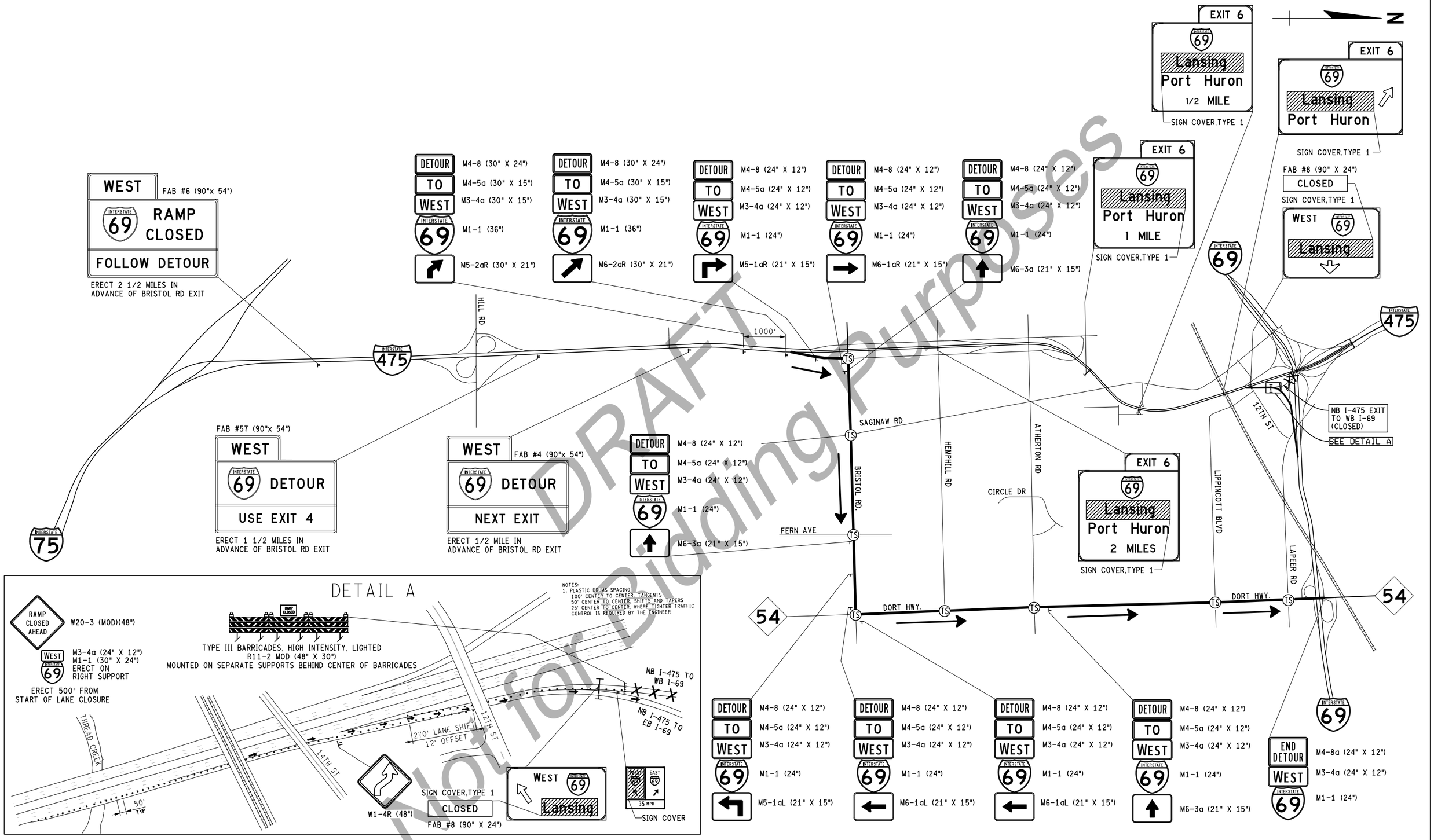

DRAFT
Not for Bidding Purposes

FINAL ROW PLAN REVISIONS (SUBMITTAL DATE:)							
NO.	DATE	AUTH	DESCRIPTION	NO.	DATE	AUTH	DESCRIPTION

AECOM

MDOT Michigan Department of Transportation

NO SCALE

FILE: 132026_I-69_MTDETR006.dgn

DATE: 07/27/20
DESIGN UNIT: BLOCK
TSC: DAVISON

CS: 25084, 25085
JN: 132026

MAINTAINING TRAFFIC DETOUR PLAN
DETOUR #6
NB I-475 RAMP TO WB I-69

DRAWING: I-69 MOT
SHEET: SECT 1

NOTE TO CONTRACTOR:

1 WHEN THE SOUTHBOUND I-475 RAMP TO EASTBOUND I-69 IS CLOSED AT THE SAME TIME AS THE SOUNTHBOUND I-475 RAMP TO WESTBOUND I-69, ERECT A STANDARD RIGHT LANE CLOSURE ALONG SOUNTHBOUND I-69 BEGINNING AT THE KEARSLEY STREET OVERPASS (MOT TYPICAL PLAN MXXX

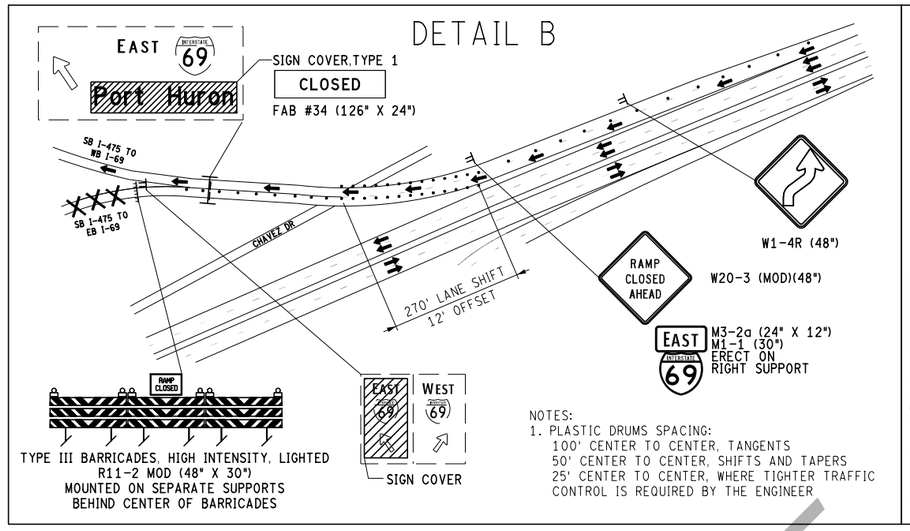

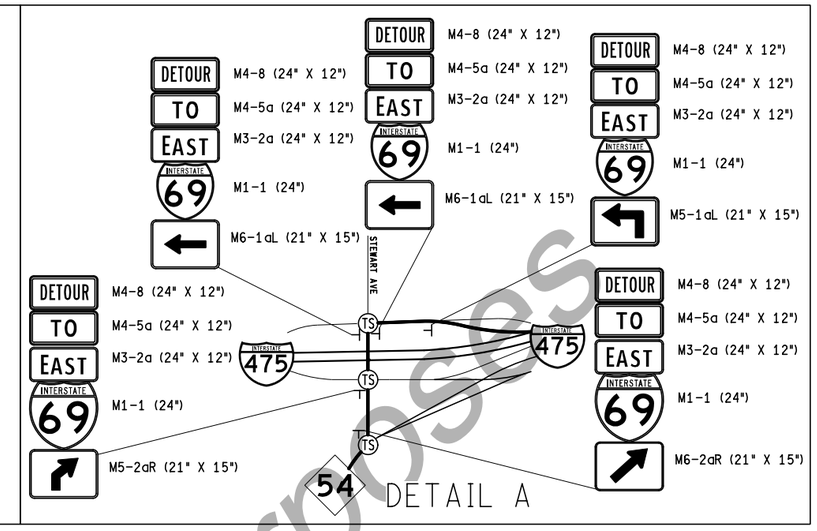

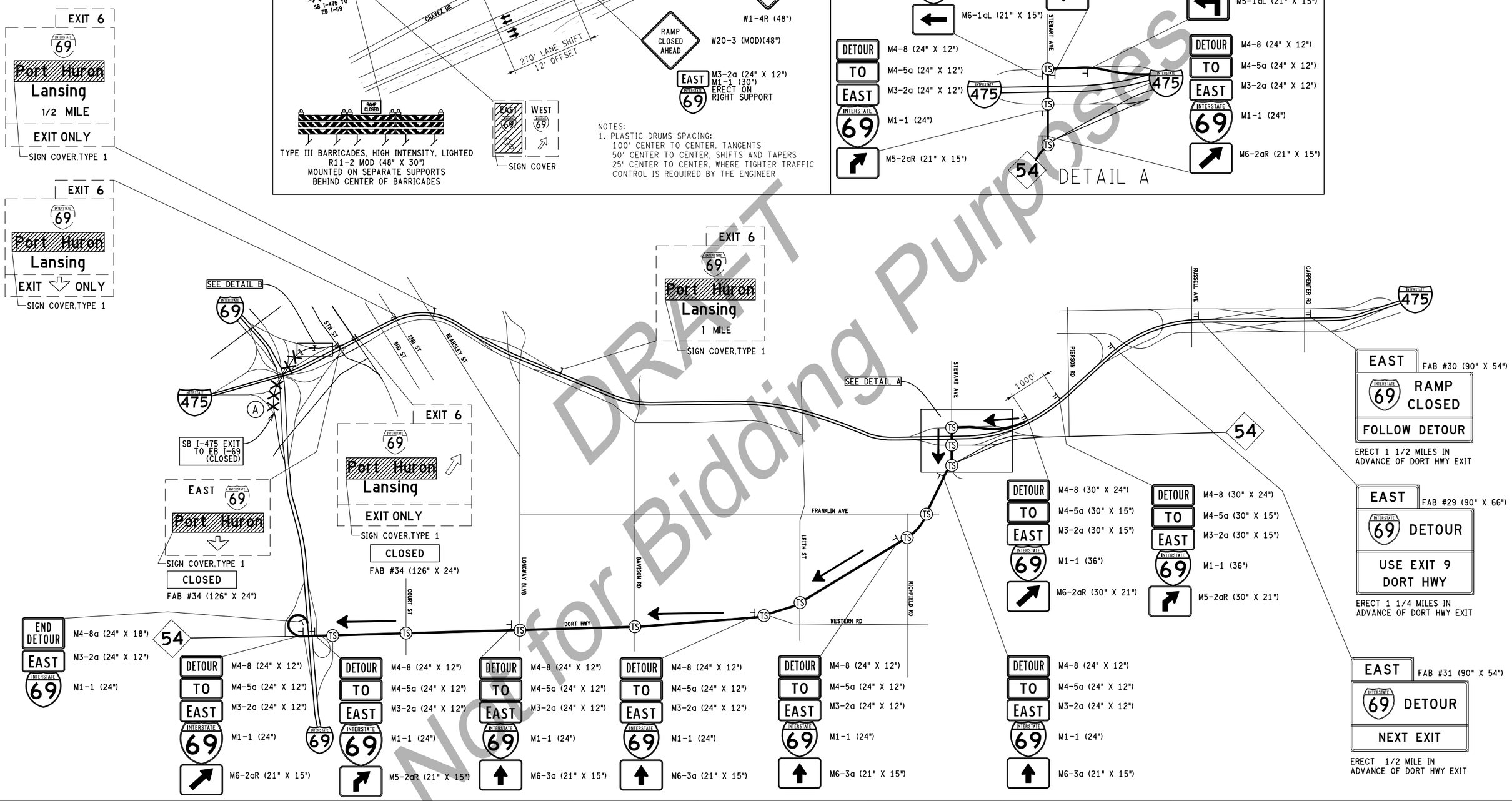

DRAFT
Not for Bidding Purposes

FINAL ROW PLAN REVISIONS (SUBMITTAL DATE:)							
NO.	DATE	AUTH	DESCRIPTION	NO.	DATE	AUTH	DESCRIPTION

AECOM

MDOT Michigan Department of Transportation

NO SCALE

FILE: 132026_I-69_MTDETR007.dgn

DATE: 07/27/20
DESIGN UNIT: BLOCK
TSC: DAVISON

CS: 25084, 25085
JN: 132026

MAINTAINING TRAFFIC DETOUR PLAN
DETOUR #7
SB I-475 RAMP TO EB I-69

DRAWING: I-69 MOT
SHEET: SECT 1 136

NOTES:
1. PLASTIC DRUMS SPACING:
   100' CENTER TO CENTER, TANGENTS
   50' CENTER TO CENTER, SHIFTS AND TAPERS
   25' CENTER TO CENTER, WHERE TIGHTER TRAFFIC CONTROL IS REQUIRED BY THE ENGINEER

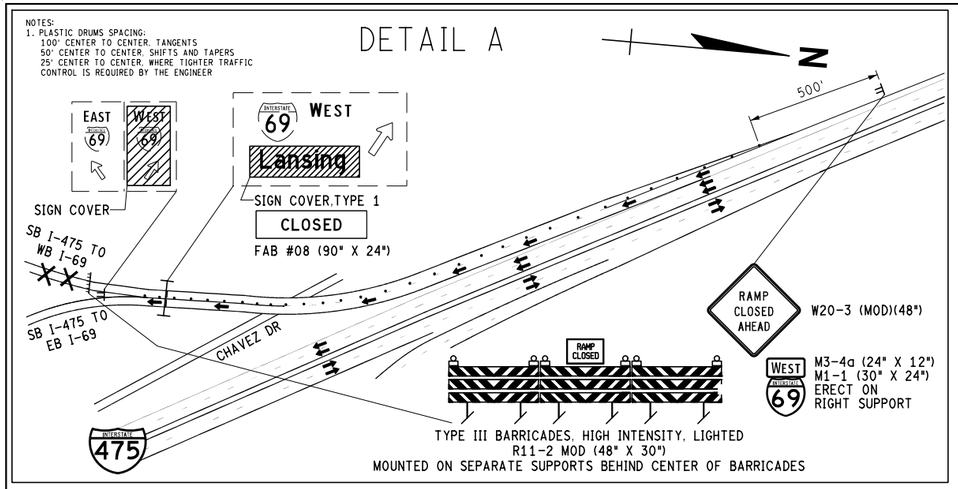

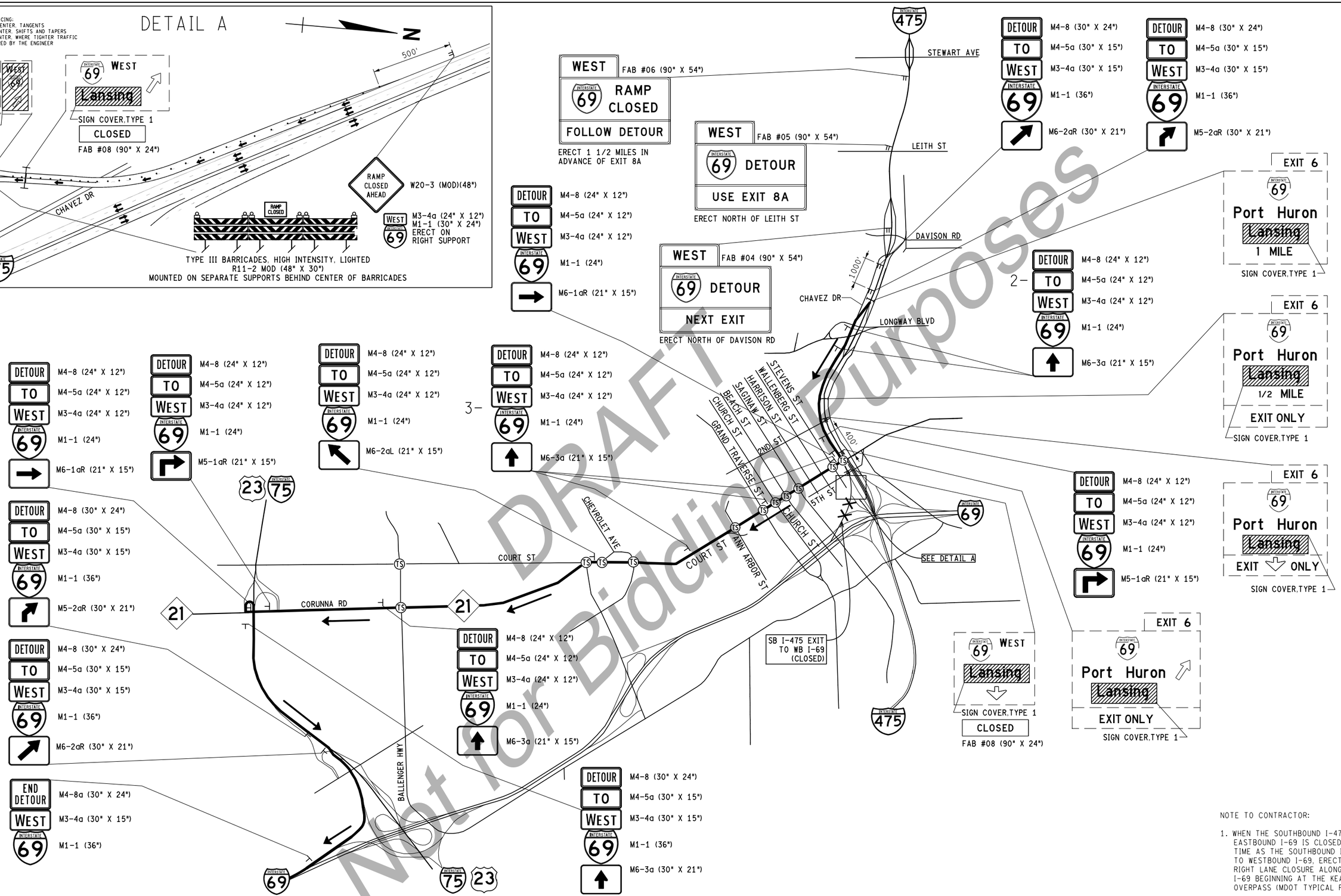

DRAFT
Not for Bidding Purposes

NOTE TO CONTRACTOR:

1. WHEN THE SOUTHBOUND I-475 RAMP TO EASTBOUND I-69 IS CLOSED AT THE SAME TIME AS THE SOUTHBOUND I-475 RAMP TO WESTBOUND I-69, ERECT A STANDARD RIGHT LANE CLOSURE ALONG SOUTHBOUND I-69 BEGINNING AT THE KEARSLEY STREET OVERPASS (MDOT TYPICAL PLAN (M0970A).

FINAL ROW PLAN REVISIONS (SUBMITTAL DATE:)							
NO.	DATE	AUTH	DESCRIPTION	NO.	DATE	AUTH	DESCRIPTION

AECOM

MDOT Michigan Department of Transportation

NO SCALE

FILE: 132026_I-69_MTDETR008.dgn

DATE: 07/27/20
DESIGN UNIT: BLOCK
TSC: DAVISON

CS: 25084, 25085
JN: 132026

MAINTAINING TRAFFIC DETOUR PLAN
DETOUR #8
SB I-475 RAMP TO WB I-69

DRAWING: I-69 MOT
SHEET: SECT 1

NOTES:
1. PLASTIC DRUMS SPACING:
   100' CENTER TO CENTER, TANGENTS
   50' CENTER TO CENTER, SHIFTS AND TAPERS
   25' CENTER TO CENTER, WHERE TIGHTER TRAFFIC CONTROL IS REQUIRED BY THE ENGINEER

DETAIL A

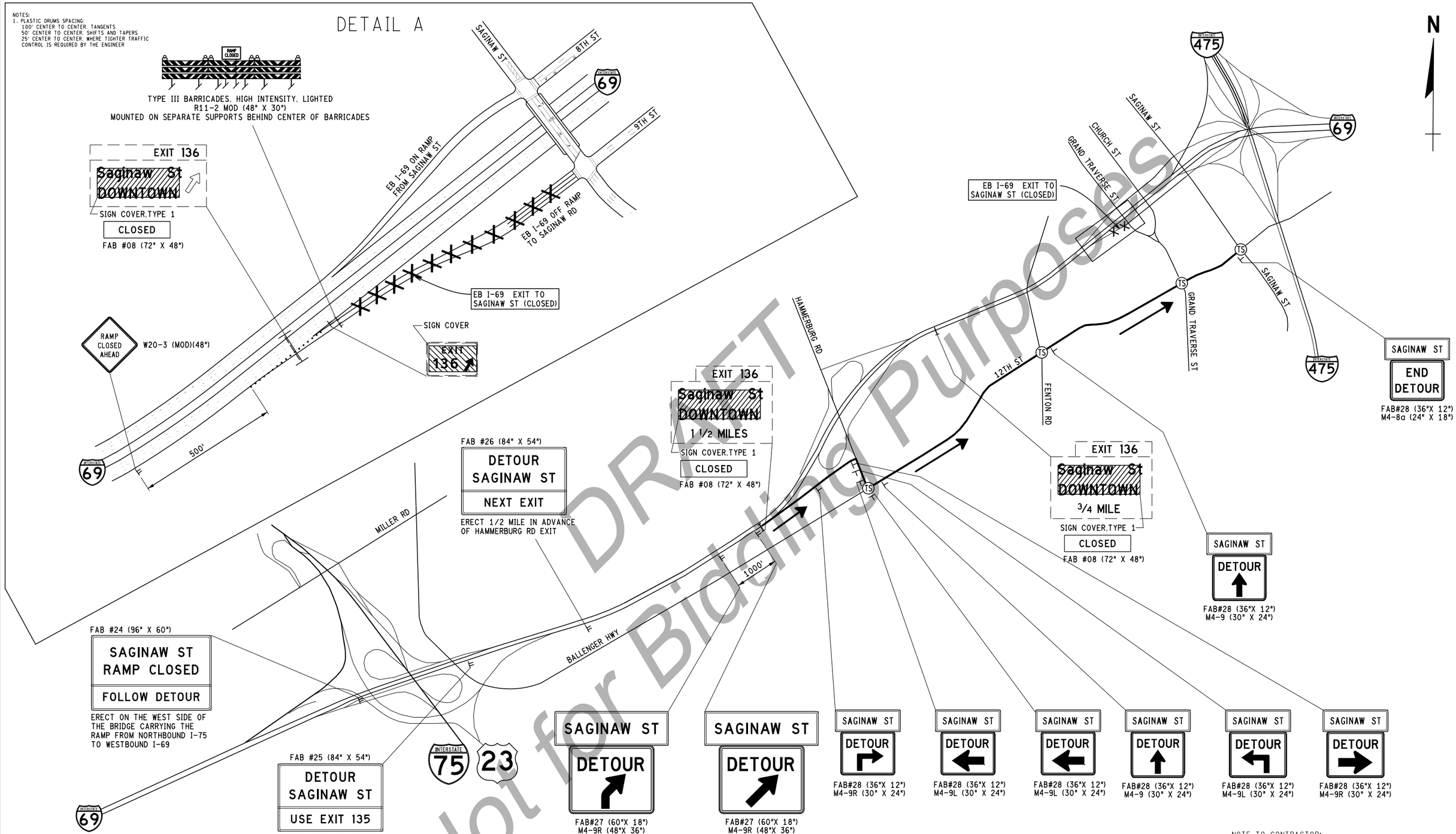

DRAFT
Not for Bidding Purposes

NOTE TO CONTRACTOR:

1. PLACE SIGNAL AT THE 9TH ST / GRAND TRAVERSE ST INTERSECTION IN FLASH MODE WHEN THE EASTBOUND I-69 OFF-RAMP TO SAGINAW STREET IS CLOSED.

FINAL ROW PLAN REVISIONS (SUBMITTAL DATE:)							
NO.	DATE	AUTH	DESCRIPTION	NO.	DATE	AUTH	DESCRIPTION

AECOM

MDOT Michigan Department of Transportation

NO SCALE

FILE: 132026_I-69_MTDETR009.dgn

DATE: 07/27/20
DESIGN UNIT: BLOCK
TSC: DAVISON

CS: 25084, 25085
JN: 132026

MAINTAINING TRAFFIC DETOUR PLAN
DETOUR #9
EB I-69 RAMP TO SAGINAW STREET

DRAWING: I-69 MOT
SHEET: SECT 1
138

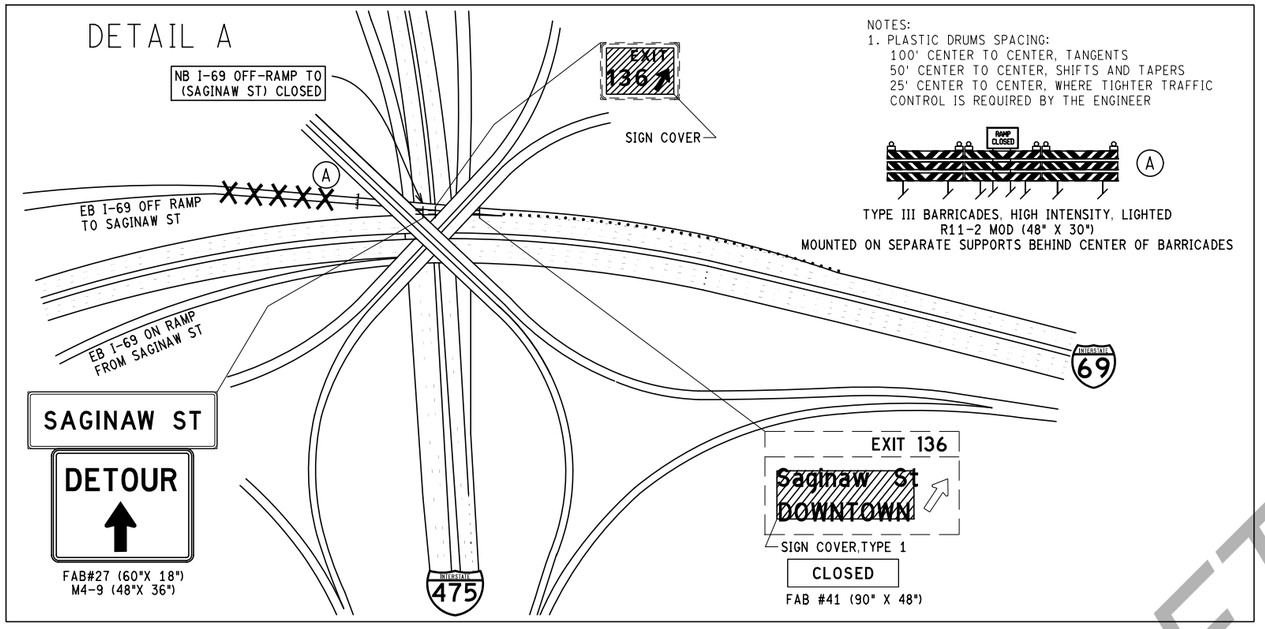

NOTES:
1. PLASTIC DRUMS SPACING:
   100' CENTER TO CENTER, TANGENTS
   50' CENTER TO CENTER, SHIFTS AND TAPERS
   25' CENTER TO CENTER, WHERE TIGHTER TRAFFIC CONTROL IS REQUIRED BY THE ENGINEER

TYPE III BARRICADES, HIGH INTENSITY, LIGHTED
R11-2 MOD (48" X 30")
MOUNTED ON SEPARATE SUPPORTS BEHIND CENTER OF BARRICADES

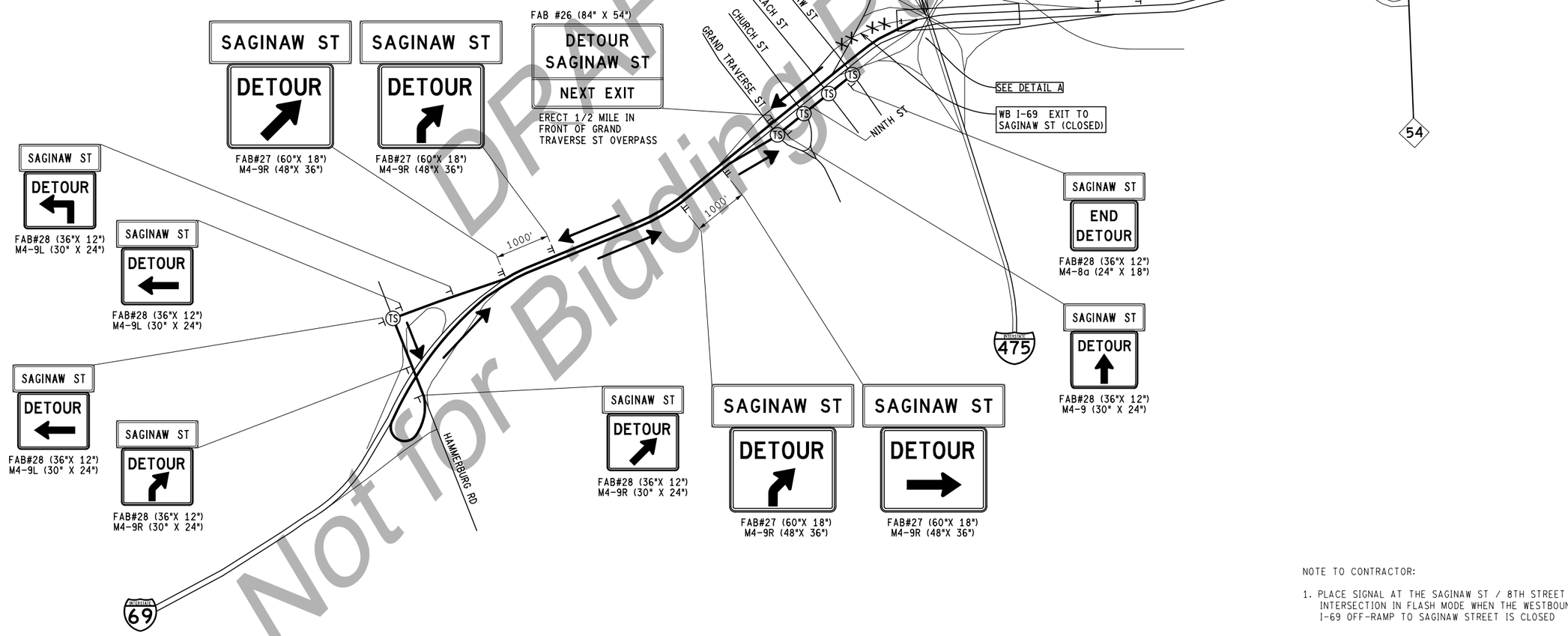

DRAFT
Not for Bidding Purposes

NOTE TO CONTRACTOR:

1. PLACE SIGNAL AT THE SAGINAW ST / 8TH STREET INTERSECTION IN FLASH MODE WHEN THE WESTBOUND I-69 OFF-RAMP TO SAGINAW STREET IS CLOSED

FINAL ROW PLAN REVISIONS (SUBMITTAL DATE:)							
NO.	DATE	AUTH	DESCRIPTION	NO.	DATE	AUTH	DESCRIPTION

AECOM

MDOT Michigan Department of Transportation

NO SCALE

FILE: 132026_I-69_MTDETR0010.dgn

DATE: 07/27/20
DESIGN UNIT: BLOCK
TSC: DAVISON

CS: 25084, 25085
JN: 132026

MAINTAINING TRAFFIC DETOUR PLAN
DETOUR #10
WB I-69 RAMP TO SAGINAW STREET

DRAWING: I-69 MOT
SHEET: SECT 1

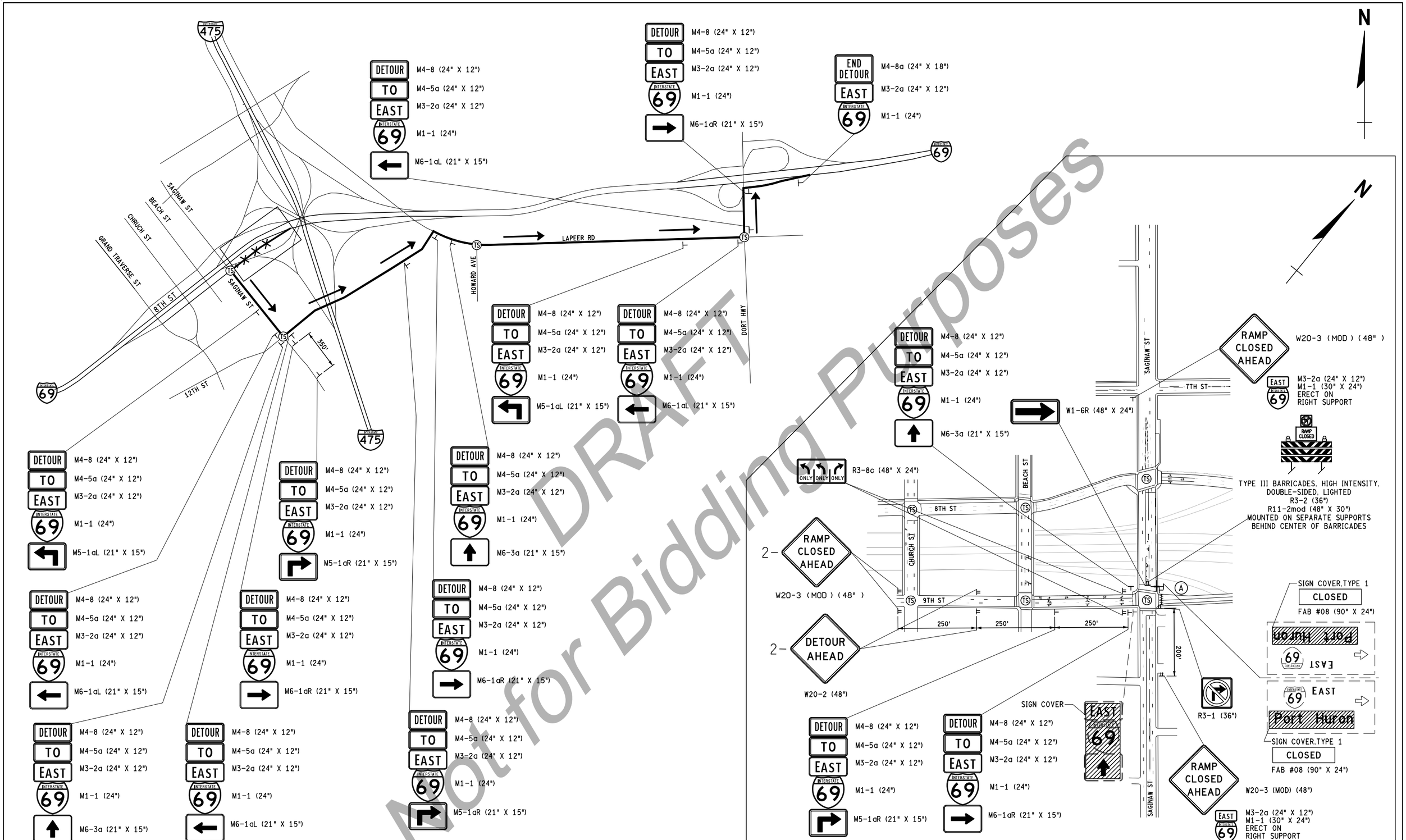

DRAFT
Not for Bidding Purposes

FINAL ROW PLAN REVISIONS (SUBMITTAL DATE:)							
NO.	DATE	AUTH	DESCRIPTION	NO.	DATE	AUTH	DESCRIPTION

AECOM

MDOT Michigan Department of Transportation

NO SCALE

FILE: 132026_I-69_MTDETR0011.dgn

DATE: 07/27/20
DESIGN UNIT: BLOCK
TSC: DAVISON

CS: 25084, 25085
JN: 132026

MAINTAINING TRAFFIC DETOUR PLAN
DETOUR #11
SAGINAW STREET TO EB I-69

DRAWING: I-69 MOT
SHEET: SECT 1 140

Note:

1. SEE MOT TYPICAL M970A FOR LANE CLOSURE APPROACH SIGNING AND OTHER NOTES.

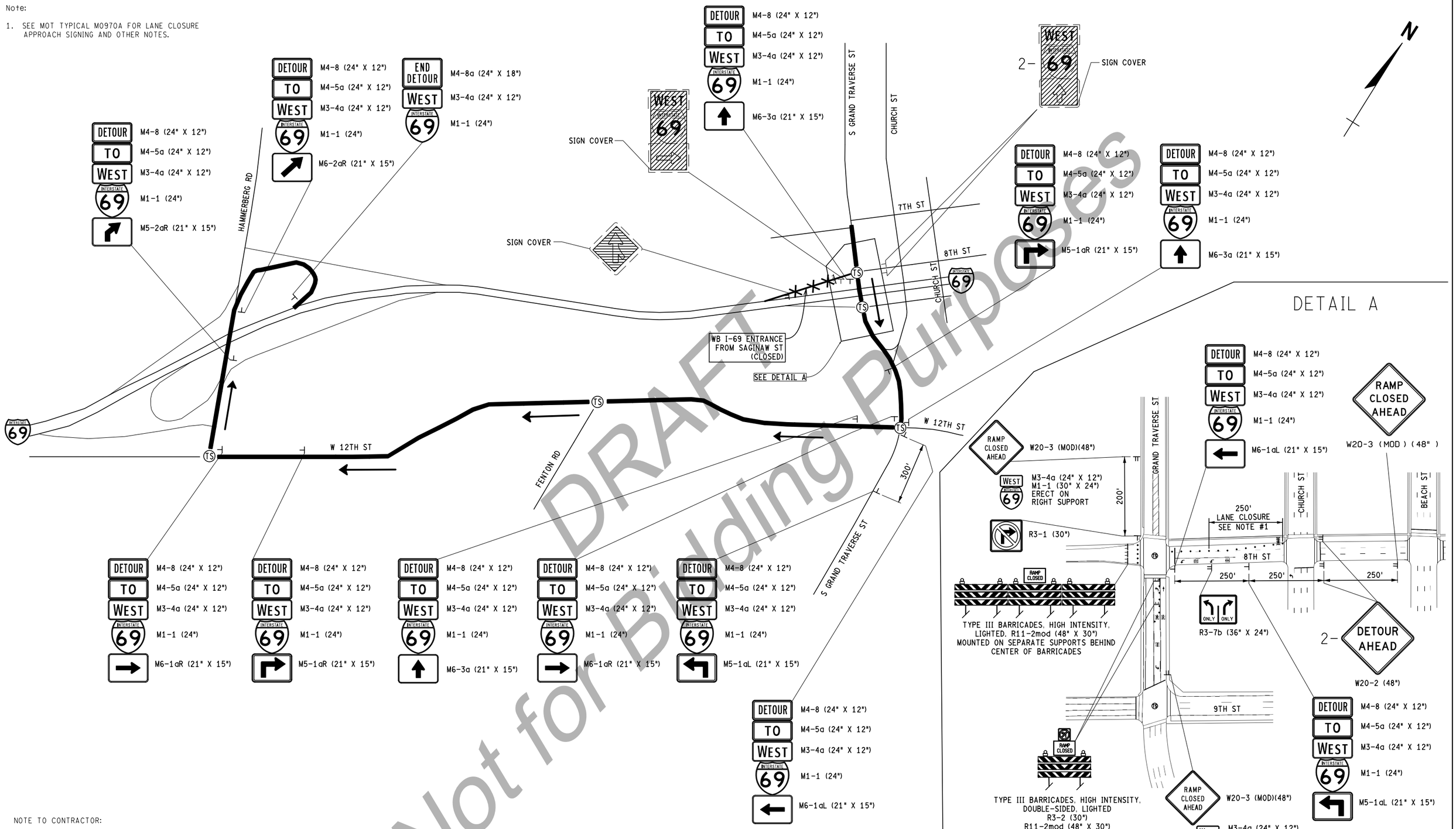

NOTE TO CONTRACTOR:

1. PLACE SIGNAL AT THE GRAND TRAVERSE ST / 8TH ST INTERSECTION IN FLASH MODE WHEN THE WESTBOUND I-69 ON-RAMP FROM SAGINAW STREET IS CLOSED

DRAFT Not for Bidding Purposes

FINAL ROW PLAN REVISIONS (SUBMITTAL DATE:)							
NO.	DATE	AUTH	DESCRIPTION	NO.	DATE	AUTH	DESCRIPTION

AECOM

MDOT Michigan Department of Transportation

NO SCALE

FILE: 132026 I-69 MTDETR0012.DGN

DATE: 07/27/20
DESIGN UNIT:
TSC: DAVISON

CS: 25084, 25085
JN: JN 132026

MAINTAINING TRAFFIC DETOUR PLAN
DETOUR #12
SB GRAND TRAVERSE TO WB I-69

DRAWING: I-69 MOT
SHEET: SECT 141

DETAIL B

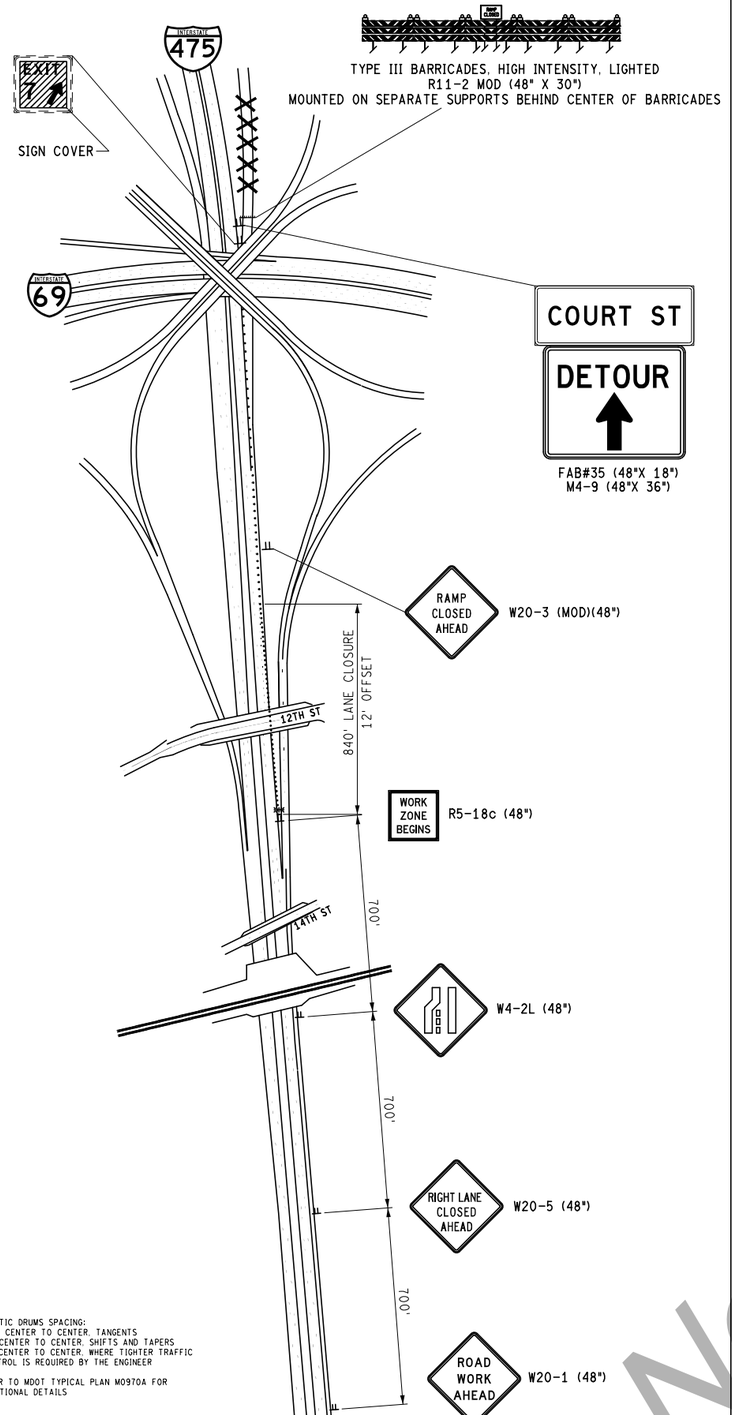

NOTES:
1. PLASTIC DRUMS SPACING:
   100' CENTER TO CENTER, TANGENTS
   50' CENTER TO CENTER, SHIFTS AND TAPERS
   25' CENTER TO CENTER, WHERE TIGHTER TRAFFIC CONTROL IS REQUIRED BY THE ENGINEER
2. REFER TO MDOT TYPICAL PLAN M0970A FOR ADDITIONAL DETAILS

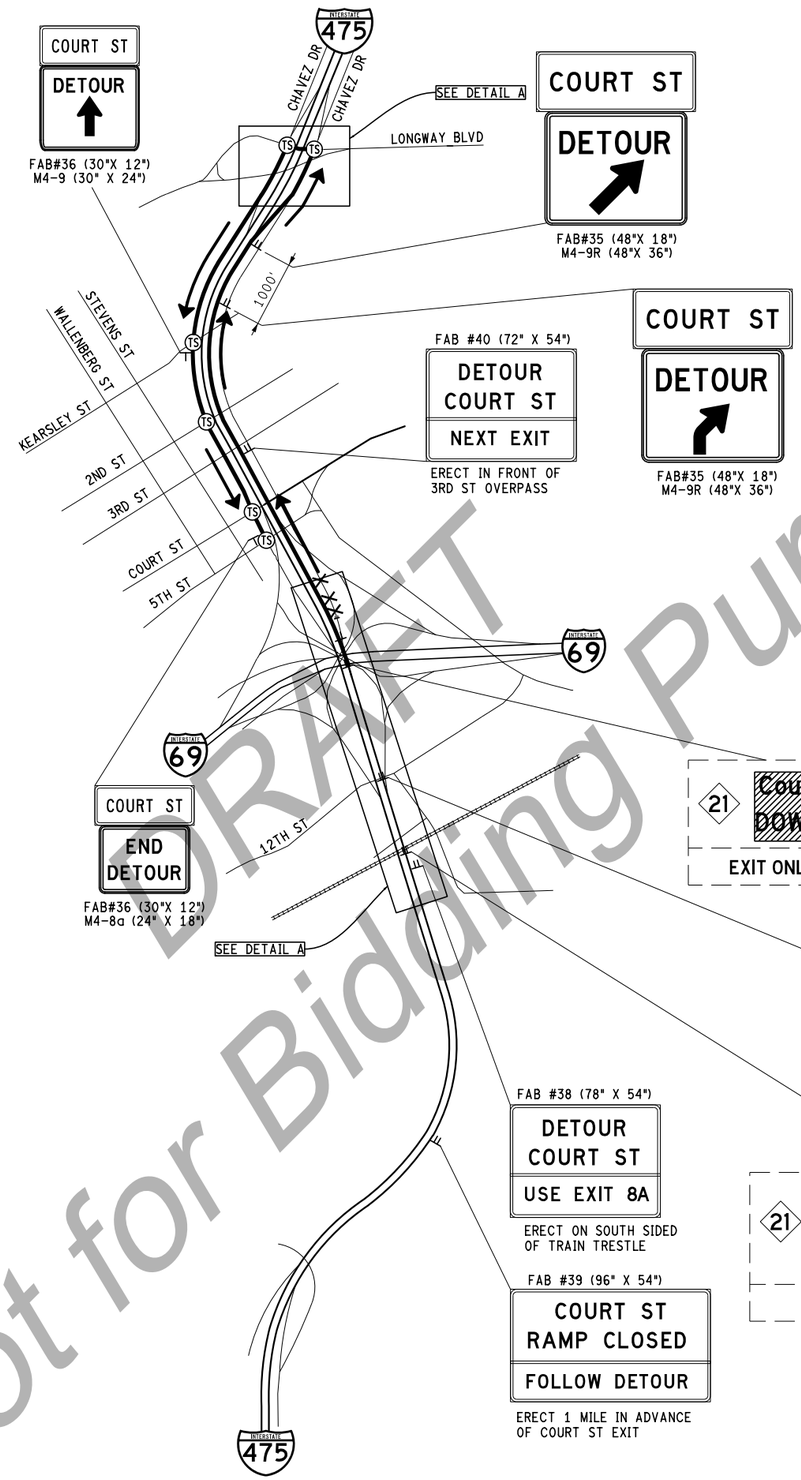

DETAIL A

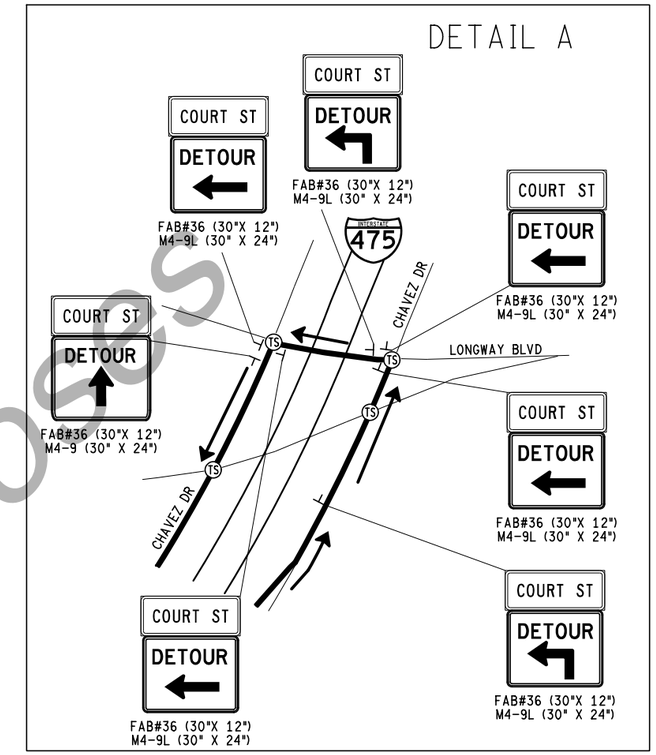

N

NOTE TO CONTRACTOR:

1. PLACE SIGNAL AT THE 5TH ST/NB CHAVEZ DR INTERSECTION IN FLASH MODE WHEN THE NORTHBOUND I-475 OFF-RAMP TO COURT ST IS CLOSED.

DRAFT
Not for Bidding Purposes

FINAL ROW PLAN REVISIONS (SUBMITTAL DATE:)							
NO.	DATE	AUTH	DESCRIPTION	NO.	DATE	AUTH	DESCRIPTION

AECOM

MDOT Michigan Department of Transportation

NO SCALE

FILE: 132026 I-69 MTDETR0013.DGN

DATE: 07/27/20
DESIGN UNIT:
TSC: DAVISON

CS: 25084, 25085
JN: JN 132026

MAINTAINING TRAFFIC DETOUR PLAN
DETOUR #13
NB I-475 RAMP TO 5TH STREET

DRAWING: I-69 MOT
SHEET / SECT: 142

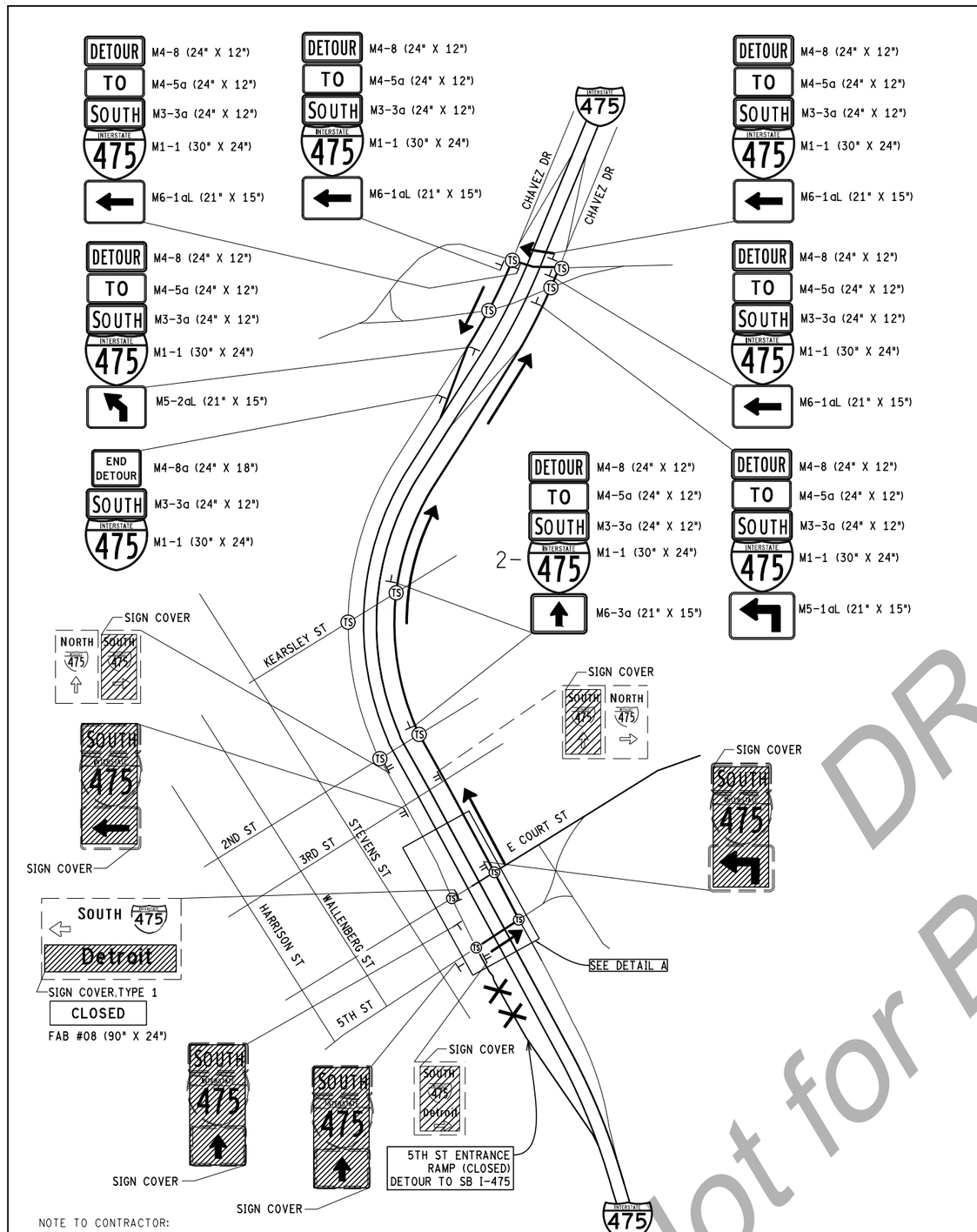

NOTE TO CONTRACTOR:

1. SEE MOT TYPICAL PLAN MXXX FOR APPROACH SIGNING ALONG SOUTHBOUND CHAVEZ DRIVE
2. PLACE SIGNAL AT THE 5TH ST / SOUTHBOUND CHAVEZ DR INTERSECTION IN FLASH MODE WHEN THE SOUTHBOUND I-475 ON-RAMP FROM COURT STREET IS CLOSED.

NOTES:
1. SEE MDOT TYPICAL MXXXX FOR LANE CLOSURE APPROACH SIGNING

DETAIL A

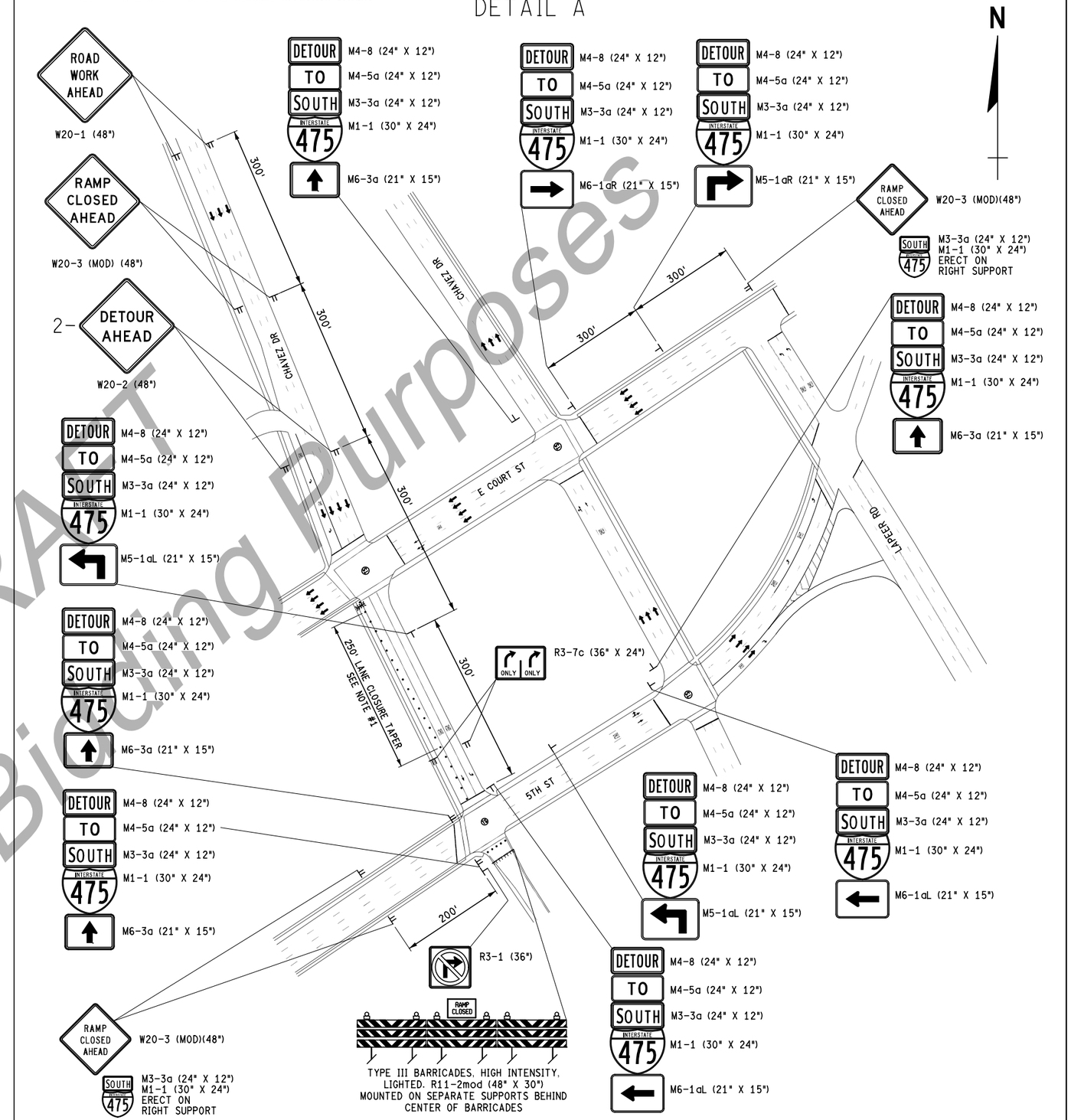

DRAFT
Not for Bidding Purposes

FINAL ROW PLAN REVISIONS (SUBMITTAL DATE:)							
NO.	DATE	AUTH	DESCRIPTION	NO.	DATE	AUTH	DESCRIPTION

AECOM

MDOT Michigan Department of Transportation

NO SCALE

	DATE: 7/27/20	CS: 25084, 25085	MAINTAINING TRAFFIC DETOUR PLAN
	DESIGN UNIT:	JN: JN 132026	DETOUR #14
FILE: 132026 I-69 MTDETR0014.DGN	TSC: DAVISON		5TH STREET RAMP TO SB I-475

DRAWING	SHEET
I-69 MOT	SECT 143

NOTE TO CONTRACTOR:

1. PLACE SIGNAL AT THE M-54 RAMP TERMINAL IN FLASH MODE WHEN THE EASTBOUND I-69 OFF-RAMP TO M-54 IS CLOSED.

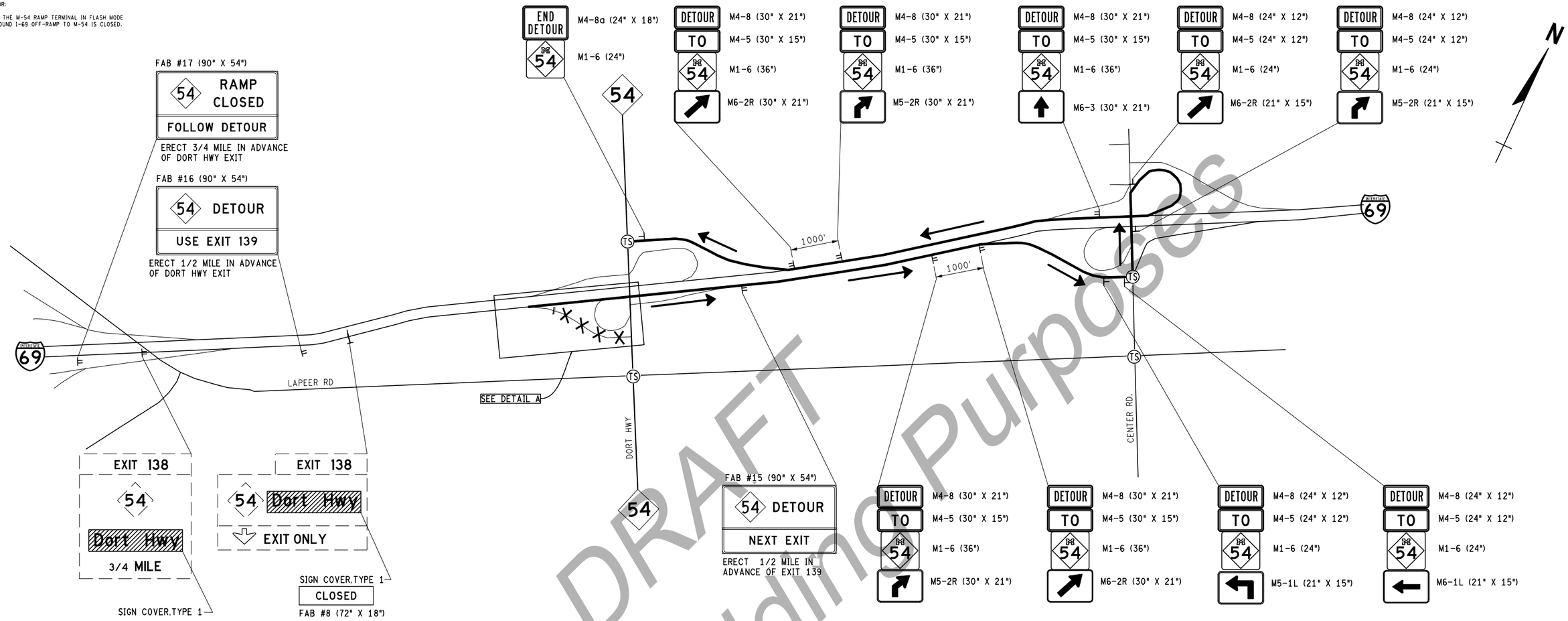

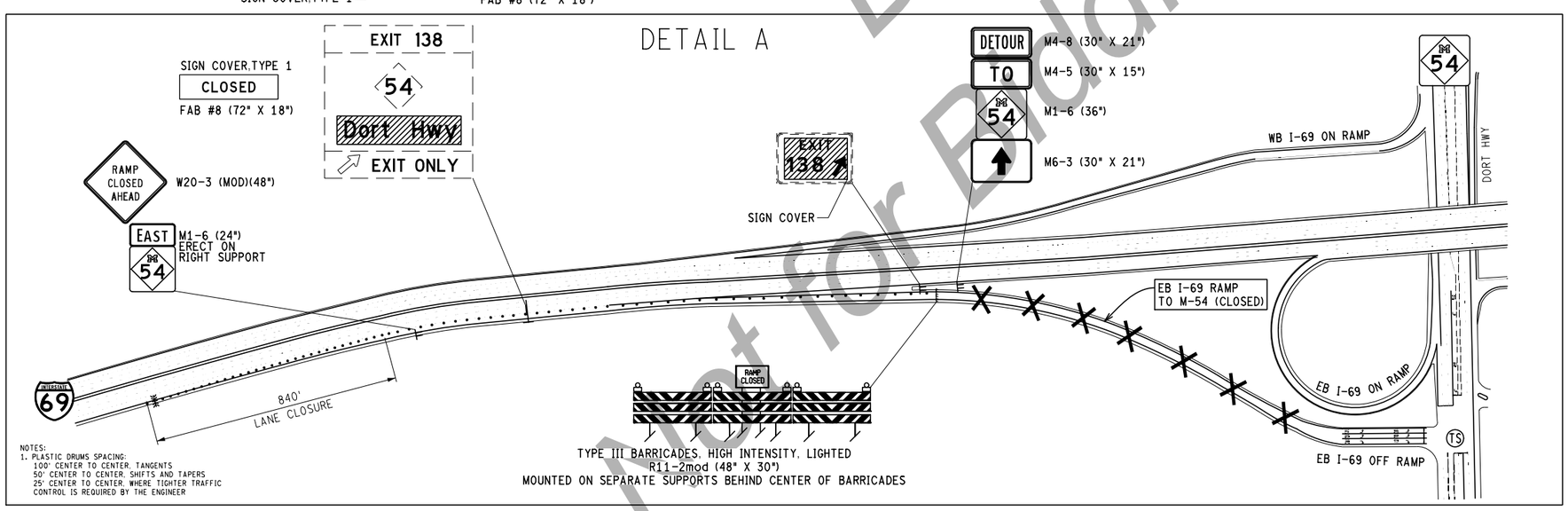

NOTES:
1. PLASTIC DRUMS SPACING:
100' CENTER TO CENTER, TANGENTS
50' CENTER TO CENTER, SHIFTS AND TAPERS
25' CENTER TO CENTER, WHERE TIGHTER TRAFFIC CONTROL IS REQUIRED BY THE ENGINEER

DRAFT
Not for Bidding Purposes

FINAL ROW PLAN REVISIONS (SUBMITTAL DATE:)							
NO.	DATE	AUTH	DESCRIPTION	NO.	DATE	AUTH	DESCRIPTION

AECOM

MDOT Michigan Department of Transportation

NO SCALE

FILE: 132026_I-69_MTDETR0015.dgn

DATE: 07/27/20
DESIGN UNIT: BLOCK
TSC: DAVISON

CS: 25084, 25085
JN: 132026

MAINTAINING TRAFFIC DETOUR PLAN
DETOUR #15
EB I-69 RAMP TO M-54

DRAWING: I-69 MOT
SHEET: SECT 1
144

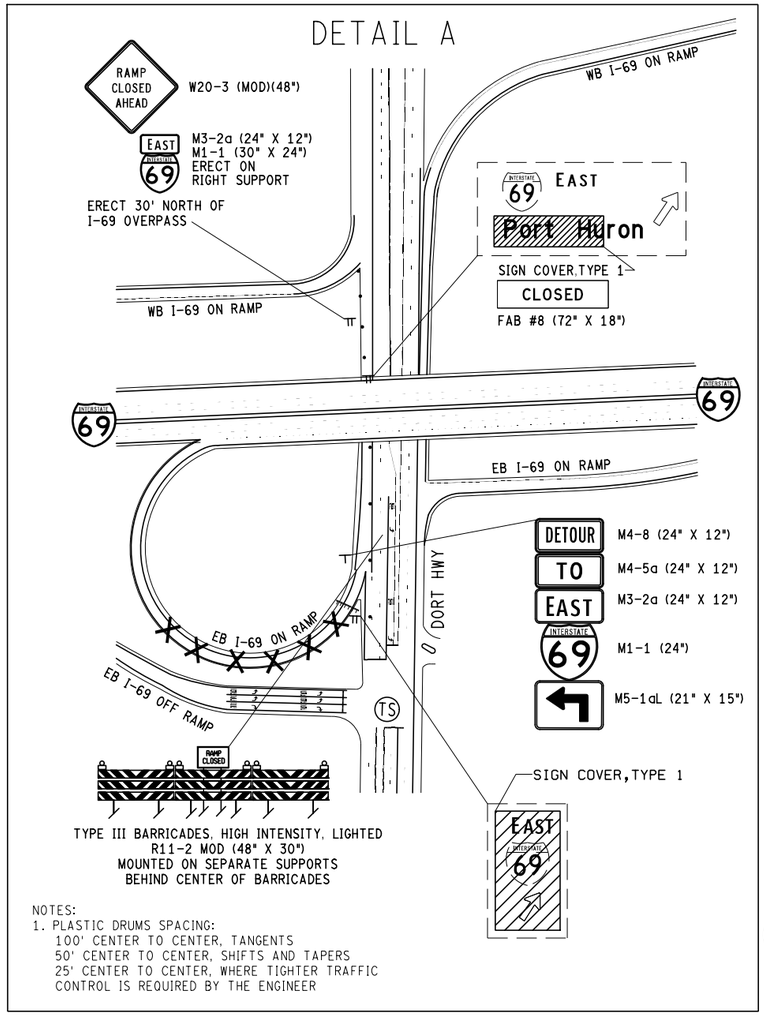

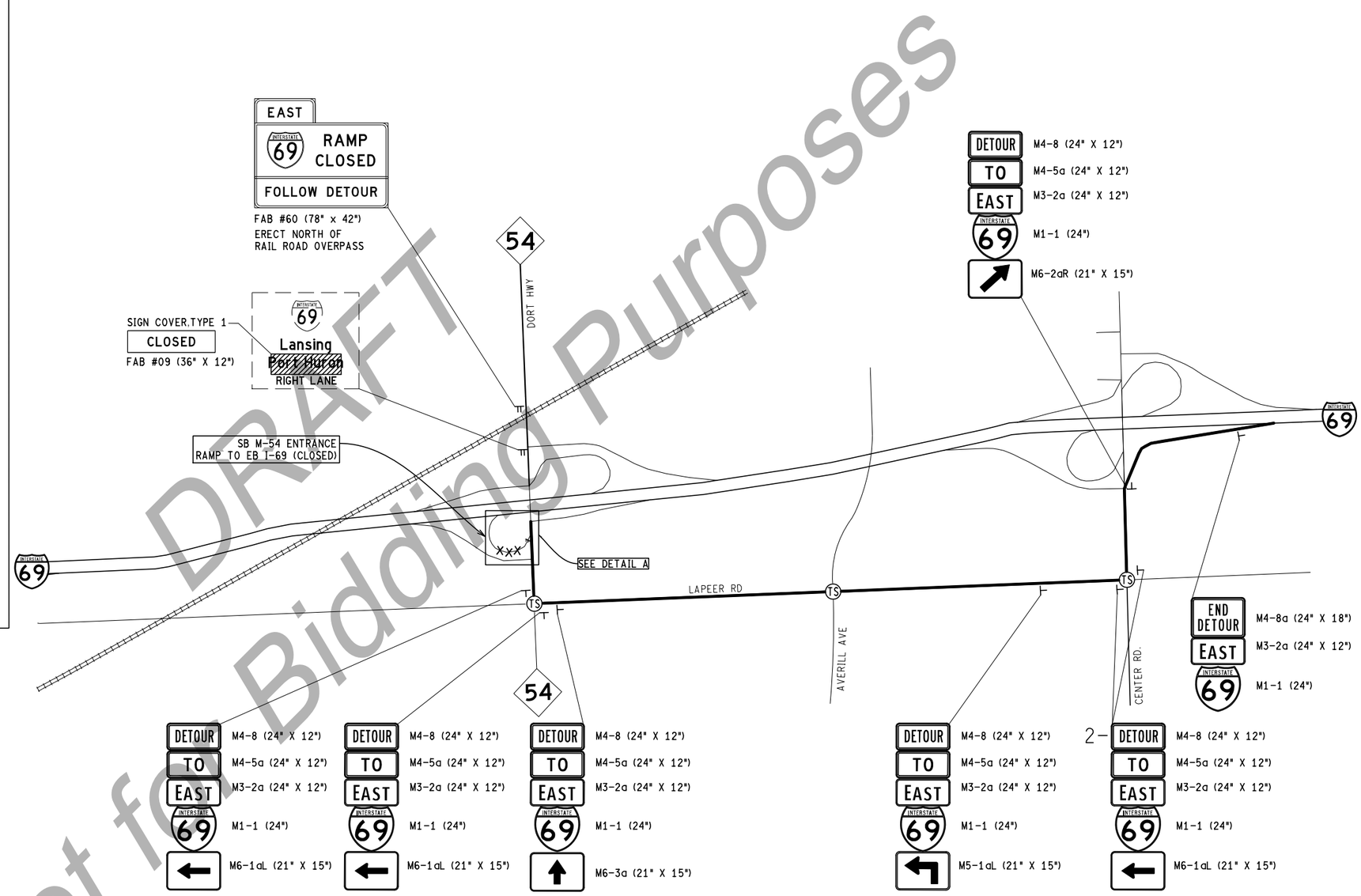

DRAFT
Not for Bidding Purposes

FINAL ROW PLAN REVISIONS (SUBMITTAL DATE:)							
NO.	DATE	AUTH	DESCRIPTION	NO.	DATE	AUTH	DESCRIPTION

AECOM

MDOT Michigan Department of Transportation

NO SCALE

FILE: 132026_I-69_MTDETR0016.dgn

DATE: 07/27/20
DESIGN UNIT: BLOCK
TSC: DAVISON

CS: 25084, 25085
JN: 132026

MAINTAINING TRAFFIC DETOUR PLAN
DETOUR #16
SB M-54 RAMP TO EB I-69

DRAWING: I-69 MOT
SHEET: SECT 1 145

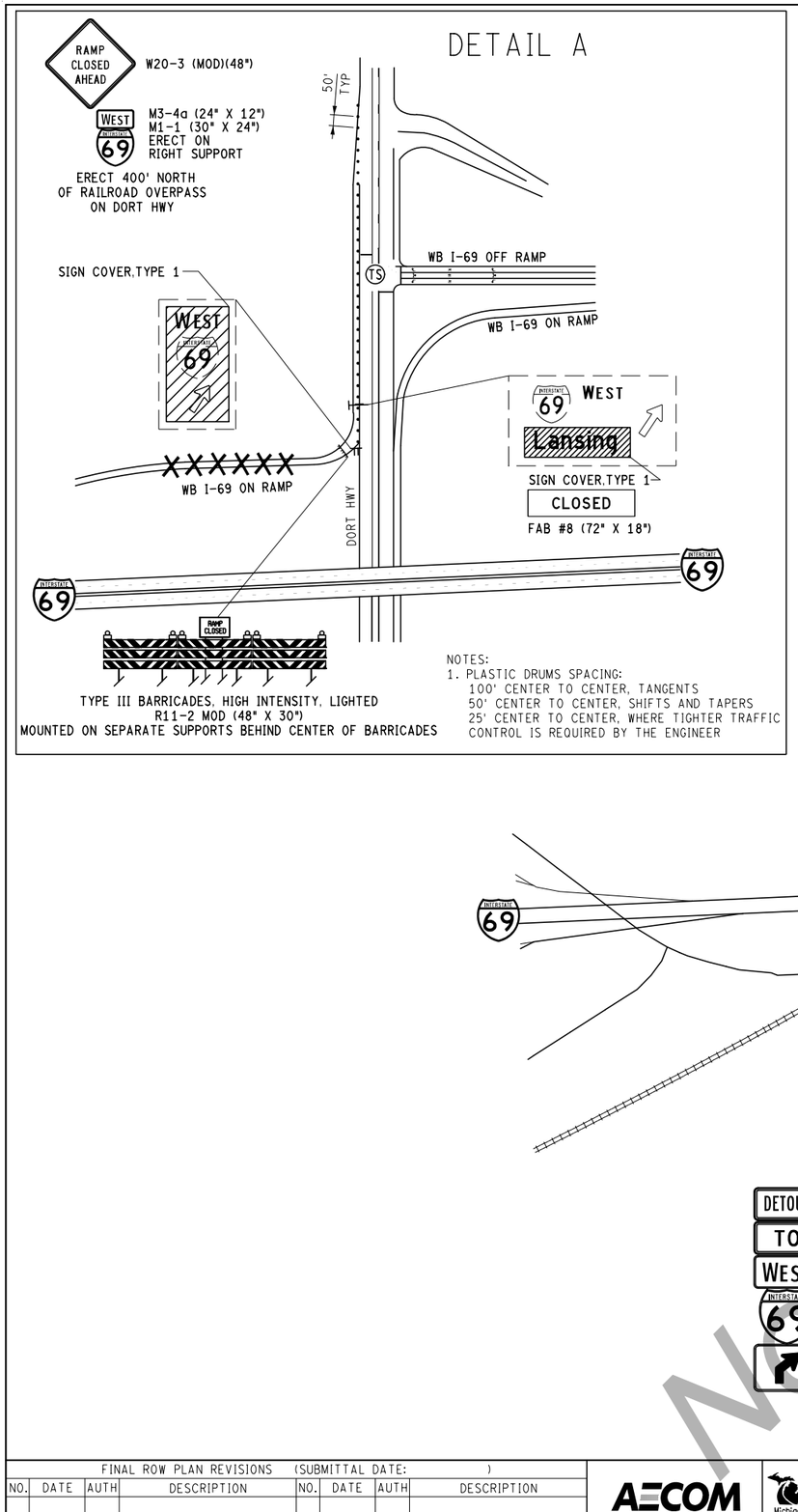

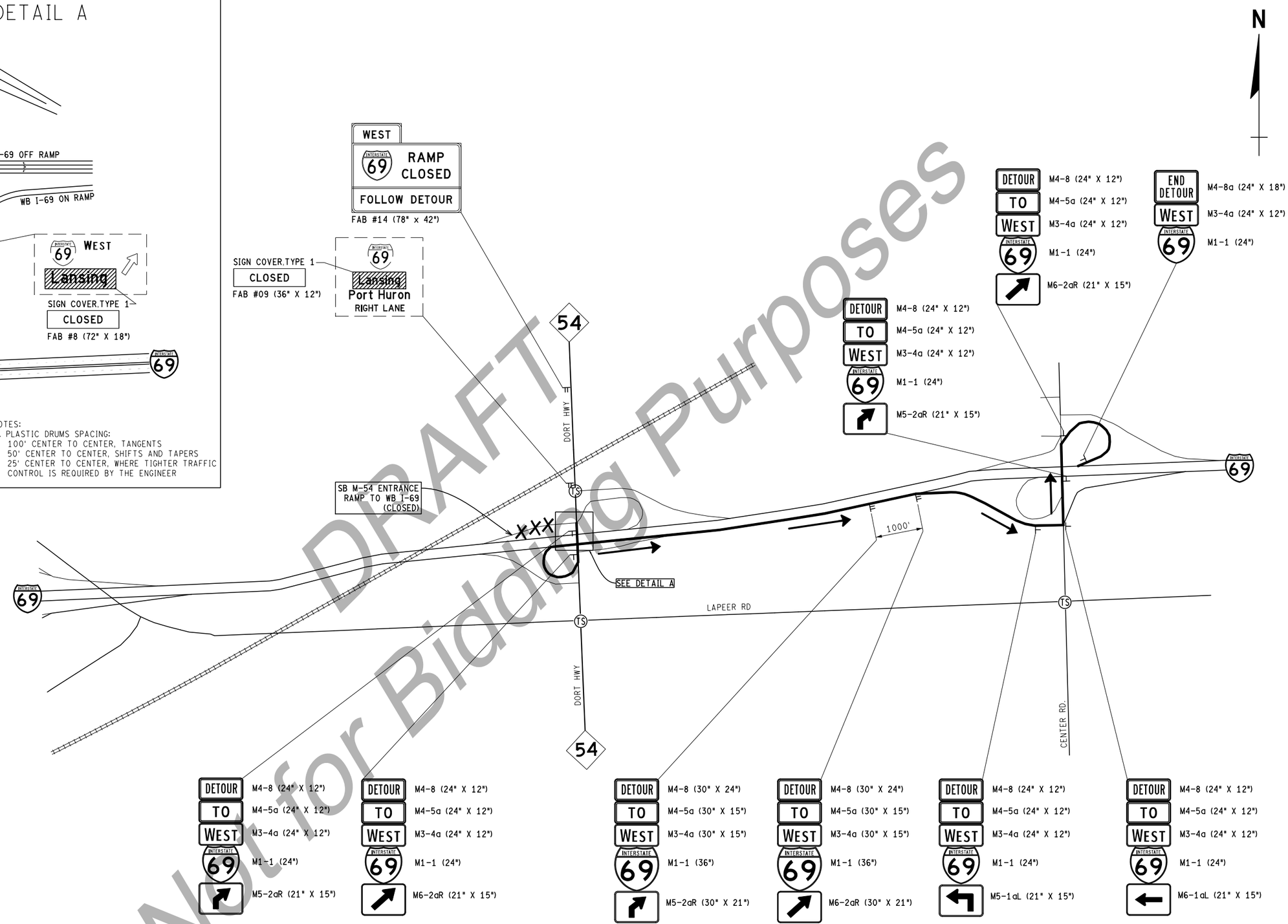

DRAFT
Not for Bidding Purposes

FINAL ROW PLAN REVISIONS (SUBMITTAL DATE:)							
NO.	DATE	AUTH	DESCRIPTION	NO.	DATE	AUTH	DESCRIPTION

AECOM

MDOT Michigan Department of Transportation

NO SCALE

FILE: 132026_I-69_MTDETR0017.dgn

DATE: 07/27/20
DESIGN UNIT: BLOCK
TSC: DAVISON

CS: 25084, 25085
JN: 132026

MAINTAINING TRAFFIC DETOUR PLAN
DETOUR #17
M-54 RAMP TO WB I-69

DRAWING: I-69 MOT

SHEET: SECT 1

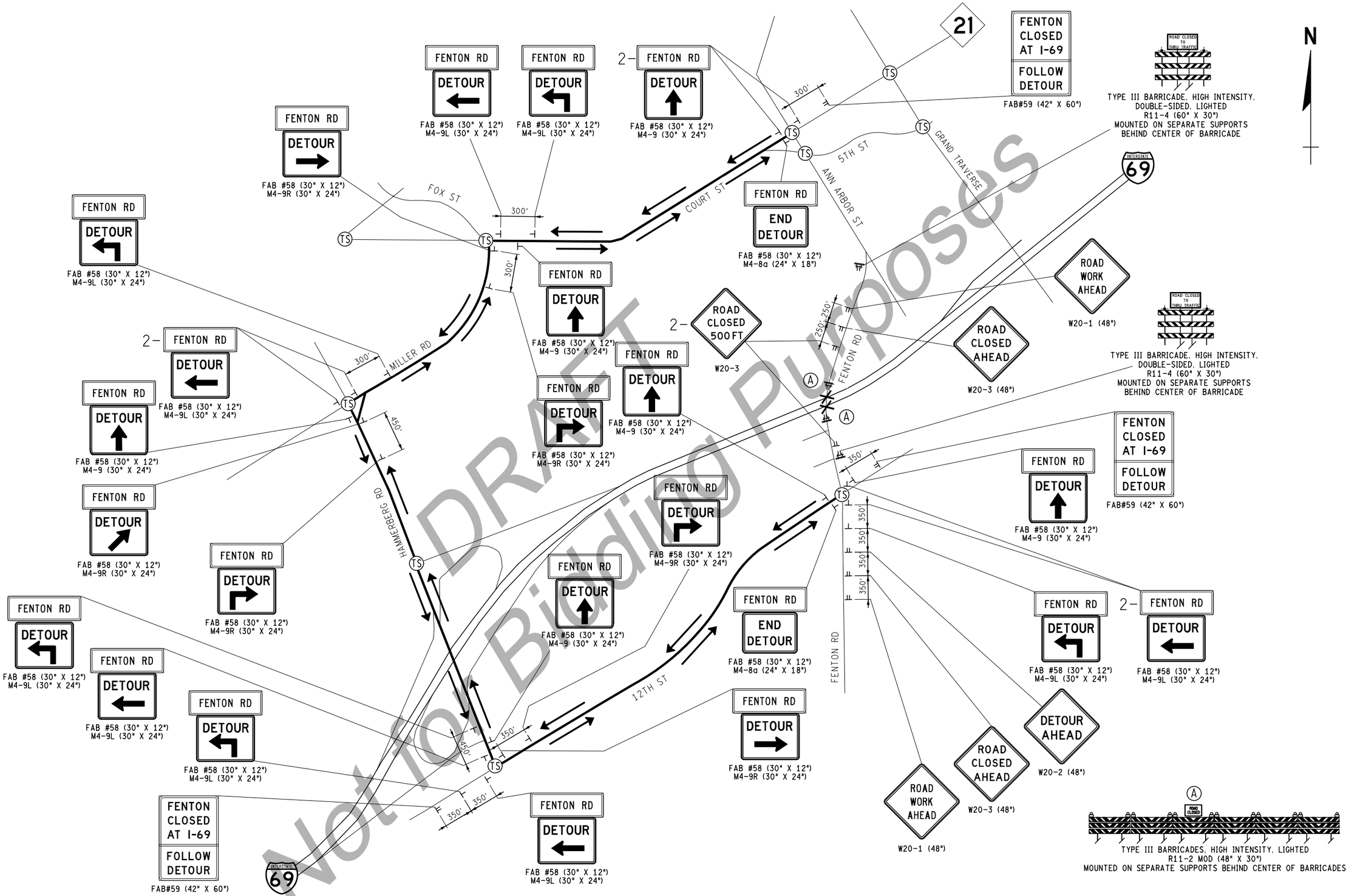

DRAFT
Not for Bidding Purposes

FINAL ROW PLAN REVISIONS (SUBMITTAL DATE:)							
NO.	DATE	AUTH	DESCRIPTION	NO.	DATE	AUTH	DESCRIPTION

AECOM | MDOT Michigan Department of Transportation | NO SCALE

FILE: 132026_I-69_MTDETR0018.dgn

DATE: 07/27/20
DESIGN UNIT: BLOCK
TSC: DAVISON

CS: 25084, 25085
JN: 132026

MAINTAINING TRAFFIC DETOUR PLAN
DETOUR #18
FENTON ROAD RAMP TO I-69

DRAWING: I-69 MOT
SHEET: SECT 1

NOTES TO CONTRACTOR:

1. SEE MOT TYPICAL PLAN M0730A FOR LANE CLOSURE SIGNING ALONG WESTBOUND 8TH STREET AND OTHER DETAILS.
2. SEE LOCAL ROAD MAINTAINING TRAFFIC PLANS FOR MORE INFORMATION.

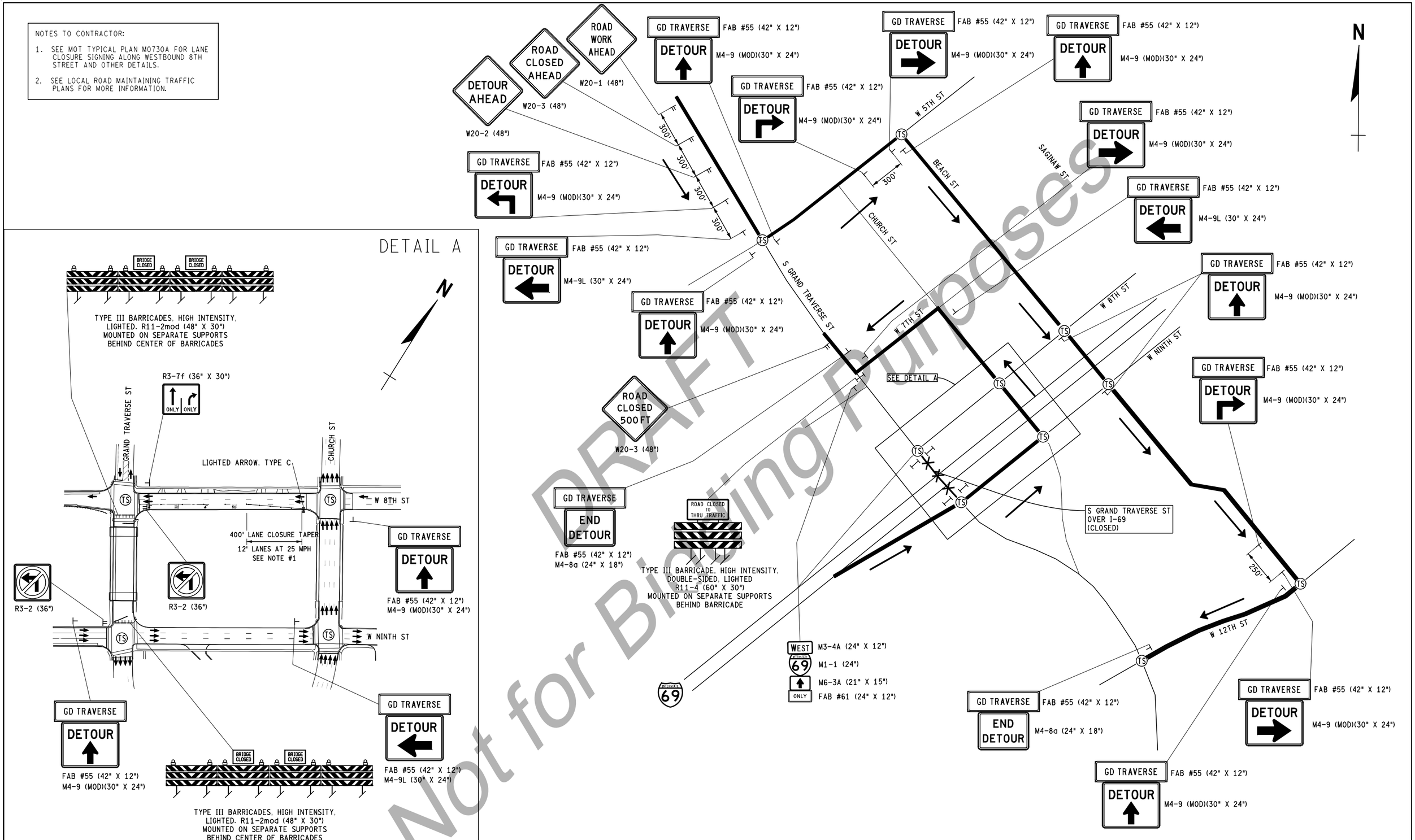

DRAFT
Not for Bidding Purposes

FINAL ROW PLAN REVISIONS (SUBMITTAL DATE:)							
NO.	DATE	AUTH	DESCRIPTION	NO.	DATE	AUTH	DESCRIPTION

AECOM

MDOT Michigan Department of Transportation

NO SCALE

FILE: 132026_I-69_MTDETR0019.dgn

DATE: 07/27/20
DESIGN UNIT: BLOCK
TSC: DAVISON

CS: 25084, 25085
JN: 132026

MAINTAINING TRAFFIC DETOUR PLAN
DETOUR #19
EB I-69/9TH ST TO NB SAGINAW

DRAWING: I-69 MOT
SHEET: SECT 1

DETAIL A

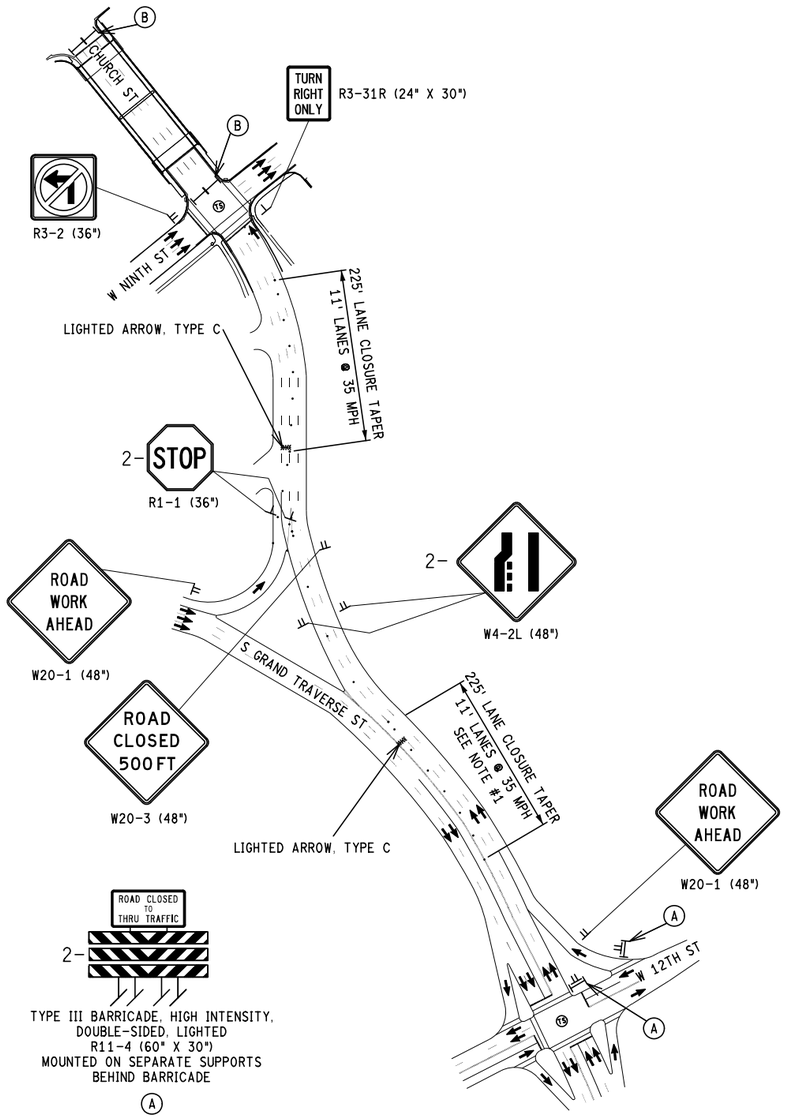

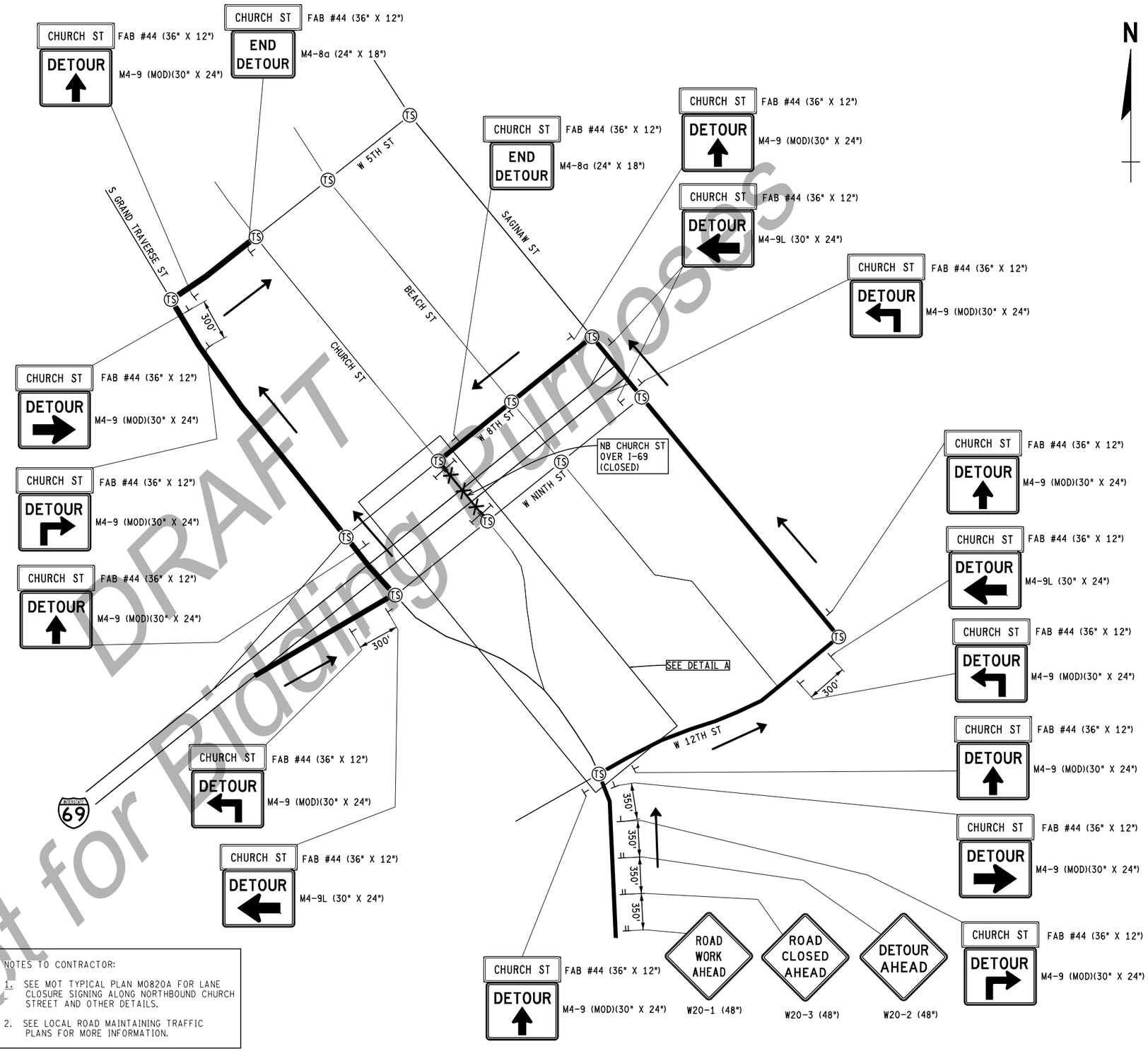

NOTES TO CONTRACTOR:

1. SEE MOT TYPICAL PLAN M0820A FOR LANE CLOSURE SIGNING ALONG NORTHBOUND CHURCH STREET AND OTHER DETAILS.
2. SEE LOCAL ROAD MAINTAINING TRAFFIC PLANS FOR MORE INFORMATION.

DRAFT
Not for Bidding Purposes

FINAL ROW PLAN REVISIONS (SUBMITTAL DATE:)							
NO.	DATE	AUTH	DESCRIPTION	NO.	DATE	AUTH	DESCRIPTION

AECOM

MDOT Michigan Department of Transportation

NO SCALE

FILE: 132026_I-69_MTDETR0020.dgn

DATE: 07/27/20
DESIGN UNIT: BLOCK
TSC: DAVISON

CS: 25084, 25085
JN: 132026

MAINTAINING TRAFFIC DETOUR PLAN
DETOUR #20
NB CHURCH STREET

DRAWING: I-69 MOT
SHEET: SECT 1 149

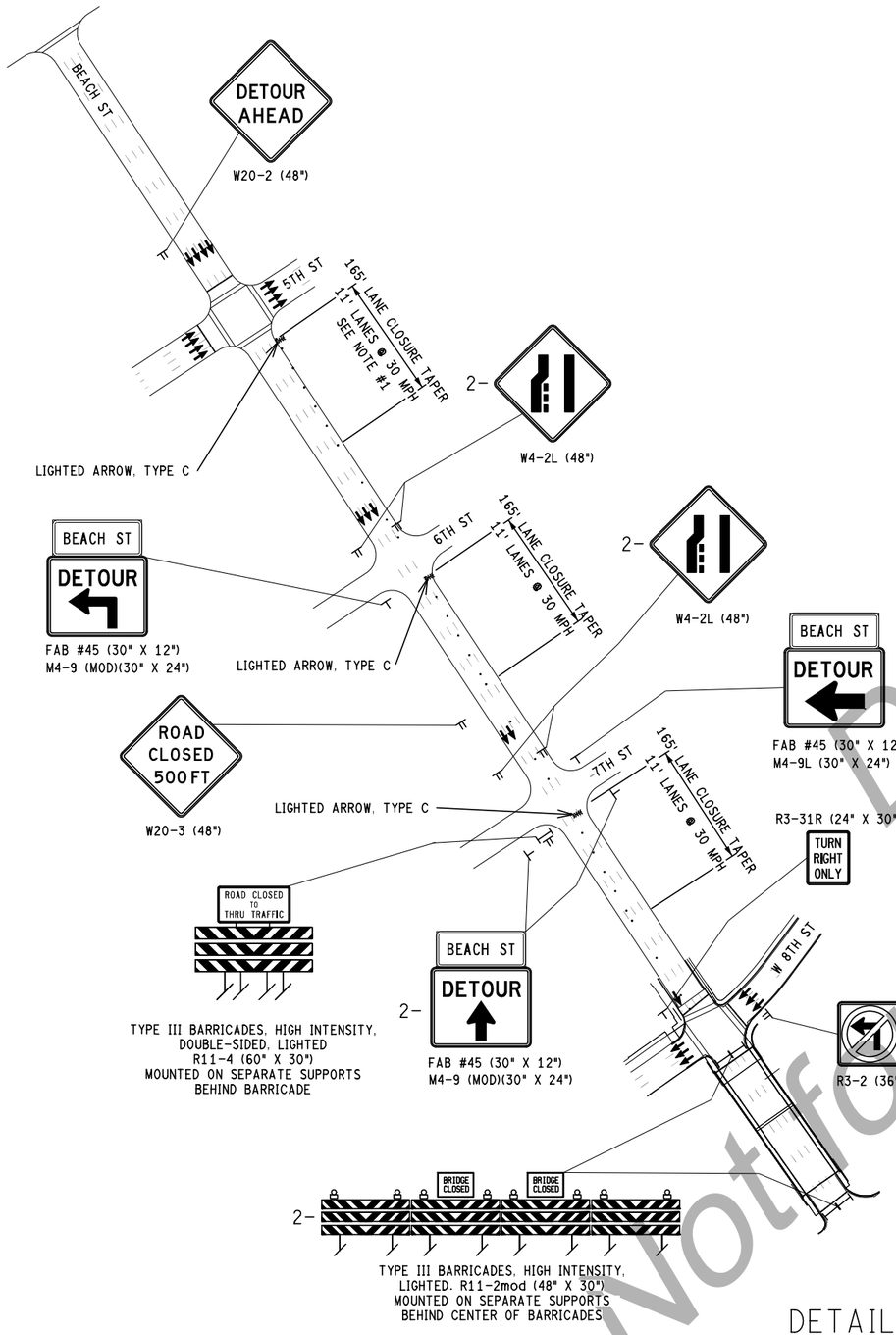

DETAIL A

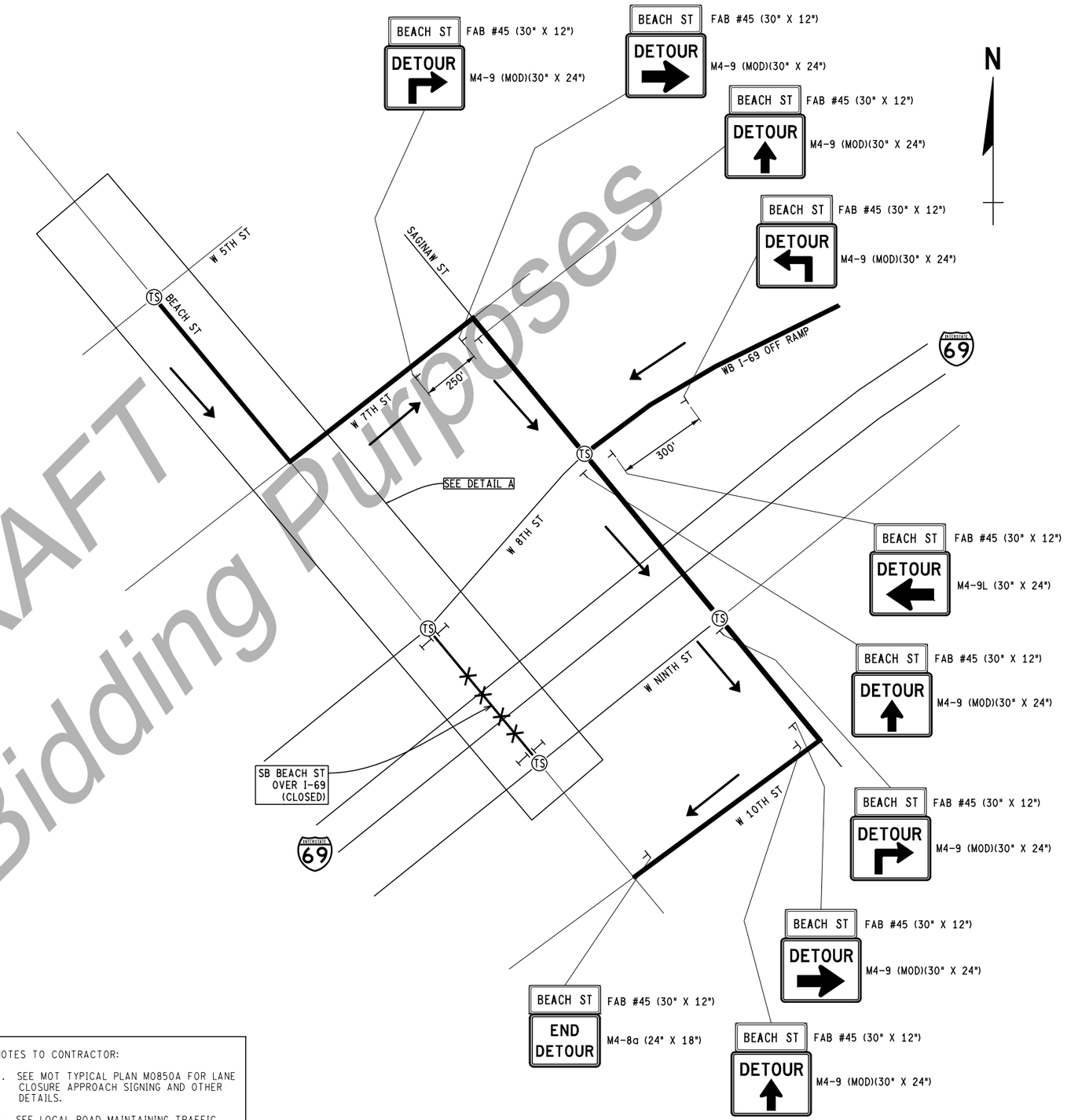

NOTES TO CONTRACTOR:

1. SEE MOT TYPICAL PLAN M0850A FOR LANE CLOSURE APPROACH SIGNING AND OTHER DETAILS.
2. SEE LOCAL ROAD MAINTAINING TRAFFIC PLANS FOR MORE INFORMATION.

DRAFT
Not for Bidding Purposes

FINAL ROW PLAN REVISIONS (SUBMITTAL DATE:)							
NO.	DATE	AUTH	DESCRIPTION	NO.	DATE	AUTH	DESCRIPTION

AECOM

MDOT Michigan Department of Transportation

NO SCALE

FILE: 132026_I-69_MTDETR0021.dgn

DATE: 07/27/20
DESIGN UNIT: BLOCK
TSC: DAVISON

CS: 25084, 25085
JN: 132026

MAINTAINING TRAFFIC DETOUR PLAN
DETOUR #21
SB BEACH ST

DRAWING: I-69 MOT
SHEET: SECT 1 150

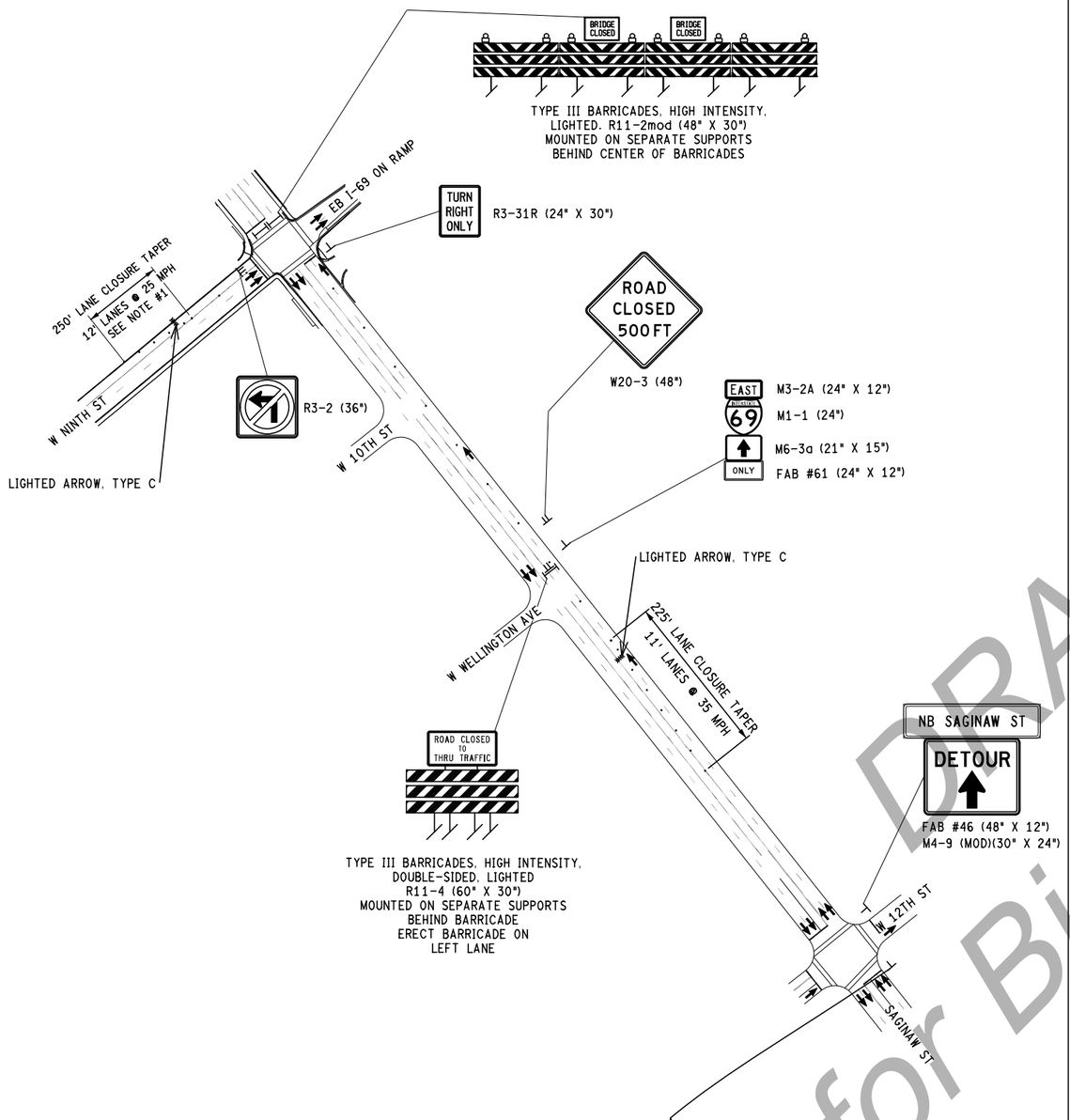

DETAIL A

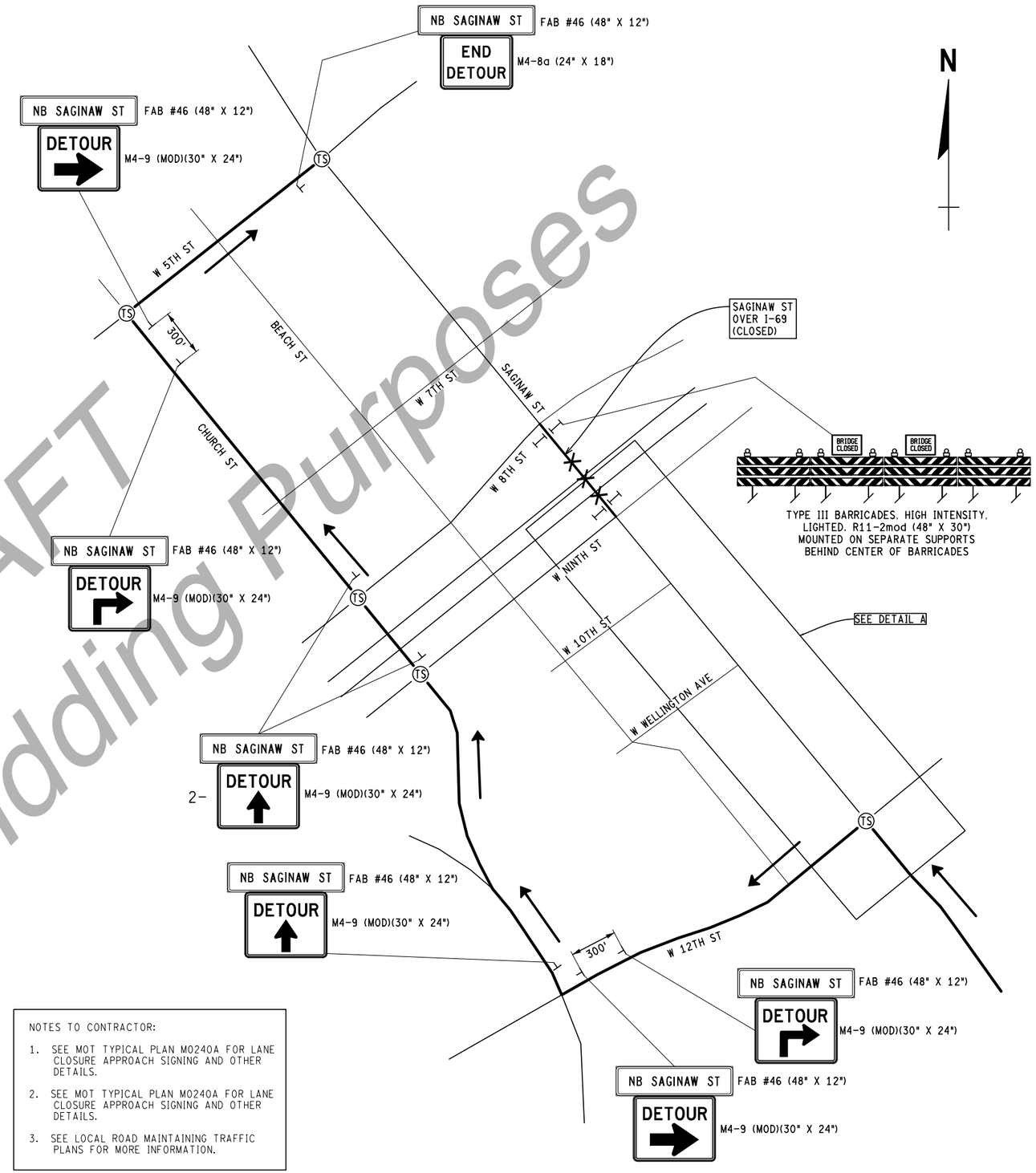

NOTES TO CONTRACTOR:

1. SEE MOT TYPICAL PLAN M0240A FOR LANE CLOSURE APPROACH SIGNING AND OTHER DETAILS.
2. SEE MOT TYPICAL PLAN M0240A FOR LANE CLOSURE APPROACH SIGNING AND OTHER DETAILS.
3. SEE LOCAL ROAD MAINTAINING TRAFFIC PLANS FOR MORE INFORMATION.

DRAFT
Not for Bidding Purposes

FINAL ROW PLAN REVISIONS (SUBMITTAL DATE:)							
NO.	DATE	AUTH	DESCRIPTION	NO.	DATE	AUTH	DESCRIPTION

AECOM

MDOT Michigan Department of Transportation

NO SCALE

	DATE: 07/27/20	CS: 25084, 25085	MAINTAINING TRAFFIC DETOUR PLAN	DRAWING I-69 MOT / SHEET SECT 1 151
	DESIGN UNIT: BLOCK	JN: 132026	DETOUR #22A	
FILE: 132026_I-69_MTDETR0022A.dgn	TSC: DAVISON		NB SAGINAW ST	

DETAIL A

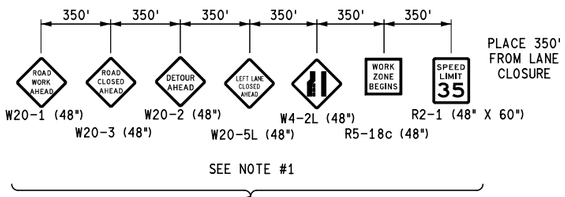

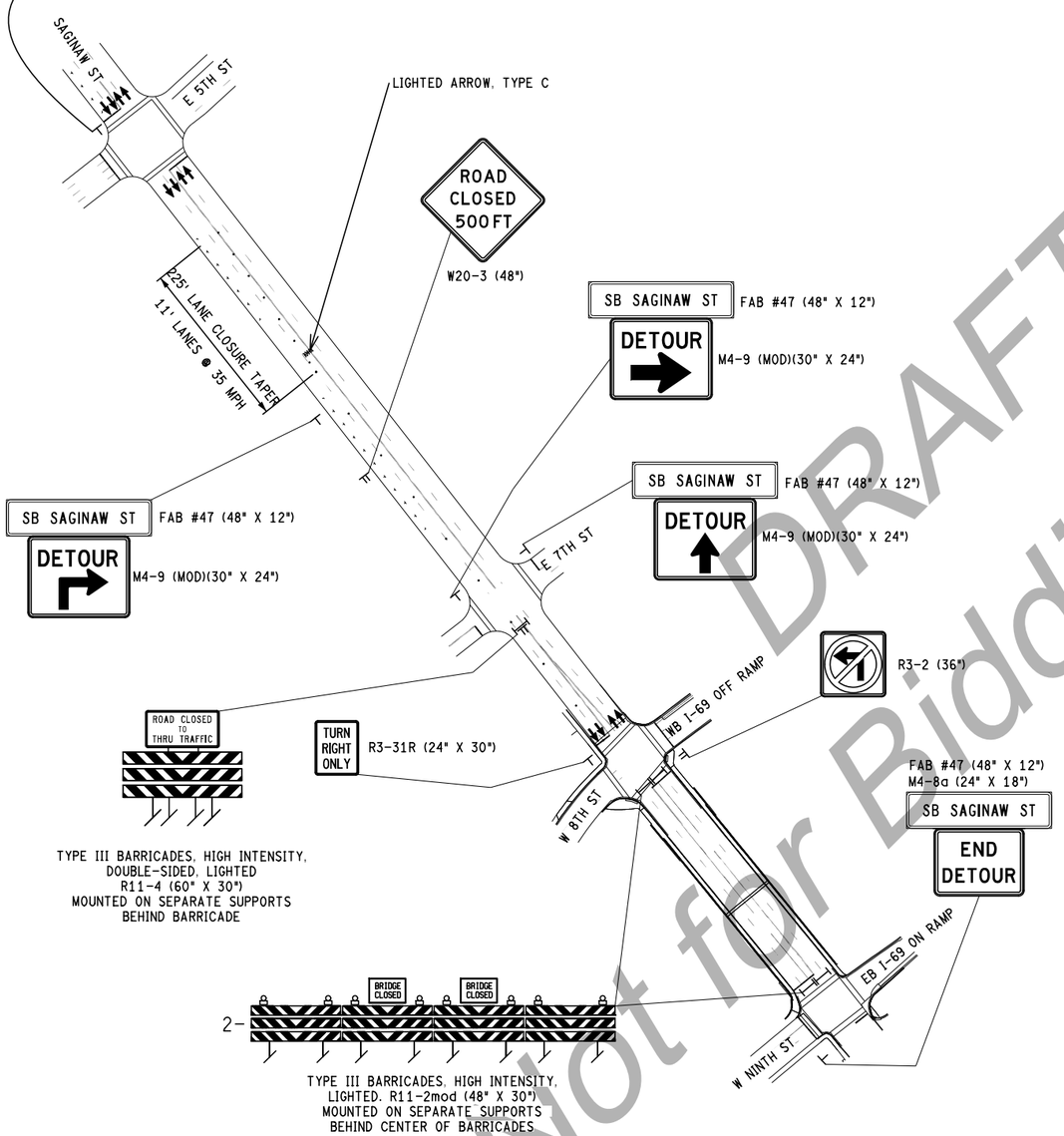

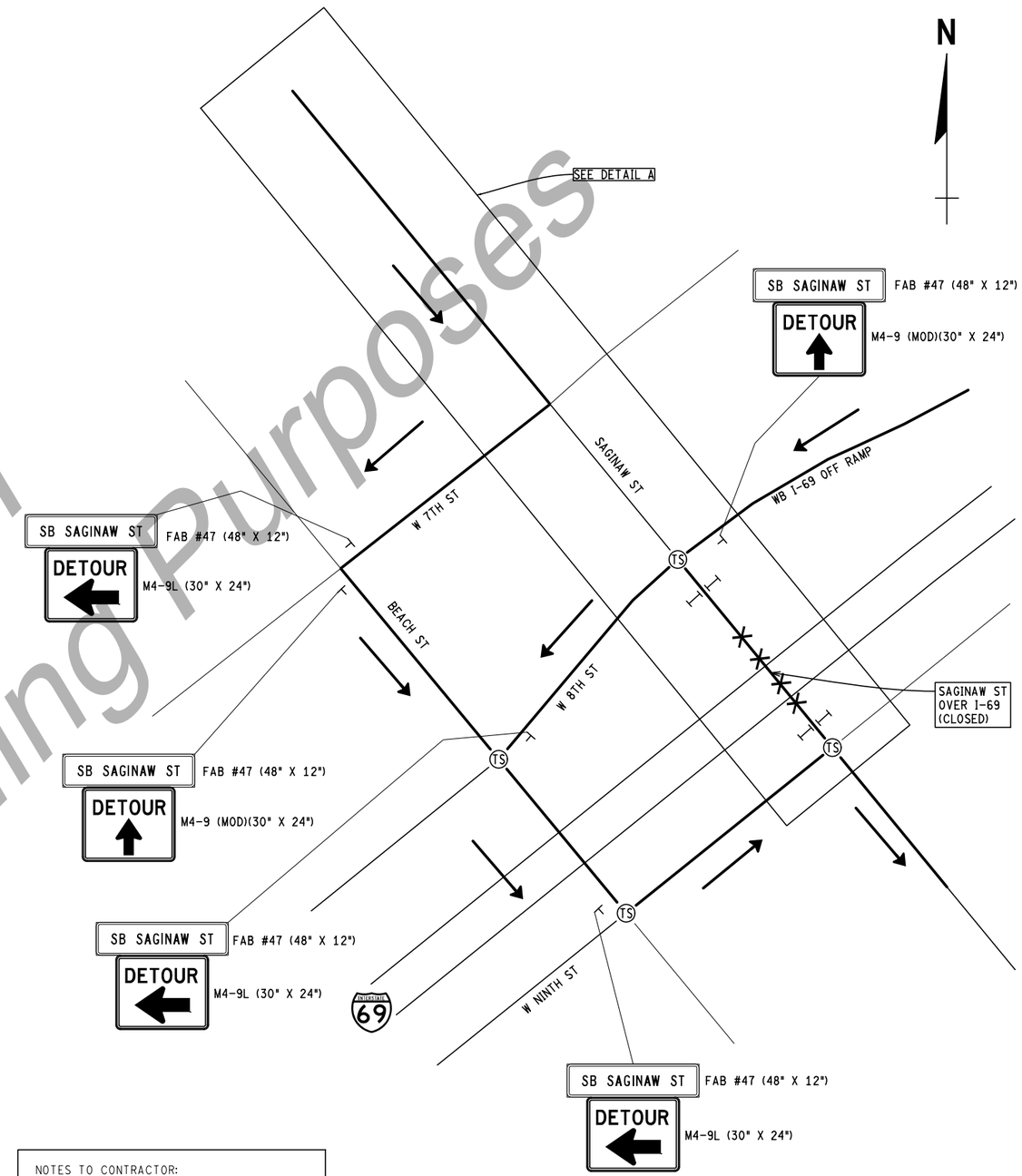

NOTES TO CONTRACTOR:

1. SEE MOT TYPICAL PLAN M0240A FOR LANE CLOSURE APPROACH SIGNING AND OTHER DETAILS.
2. SEE LOCAL ROAD MAINTAINING TRAFFIC PLANS FOR MORE INFORMATION.

DRAFT
Not for Bidding Purposes

FINAL ROW PLAN REVISIONS (SUBMITTAL DATE:)							
NO.	DATE	AUTH	DESCRIPTION	NO.	DATE	AUTH	DESCRIPTION

AECOM

MDOT Michigan Department of Transportation

NO SCALE

FILE: 132026_I-69_MTDETR0022B.dgn

DATE: 07/27/20
DESIGN UNIT: BLOCK
TSC: DAVISON

CS: 25084, 25085
JN: 132026

MAINTAINING TRAFFIC DETOUR PLAN
DETOUR #22B
SB SAGINAW ST

DRAWING: I-69 MOT

SHEET: SECT 1 152

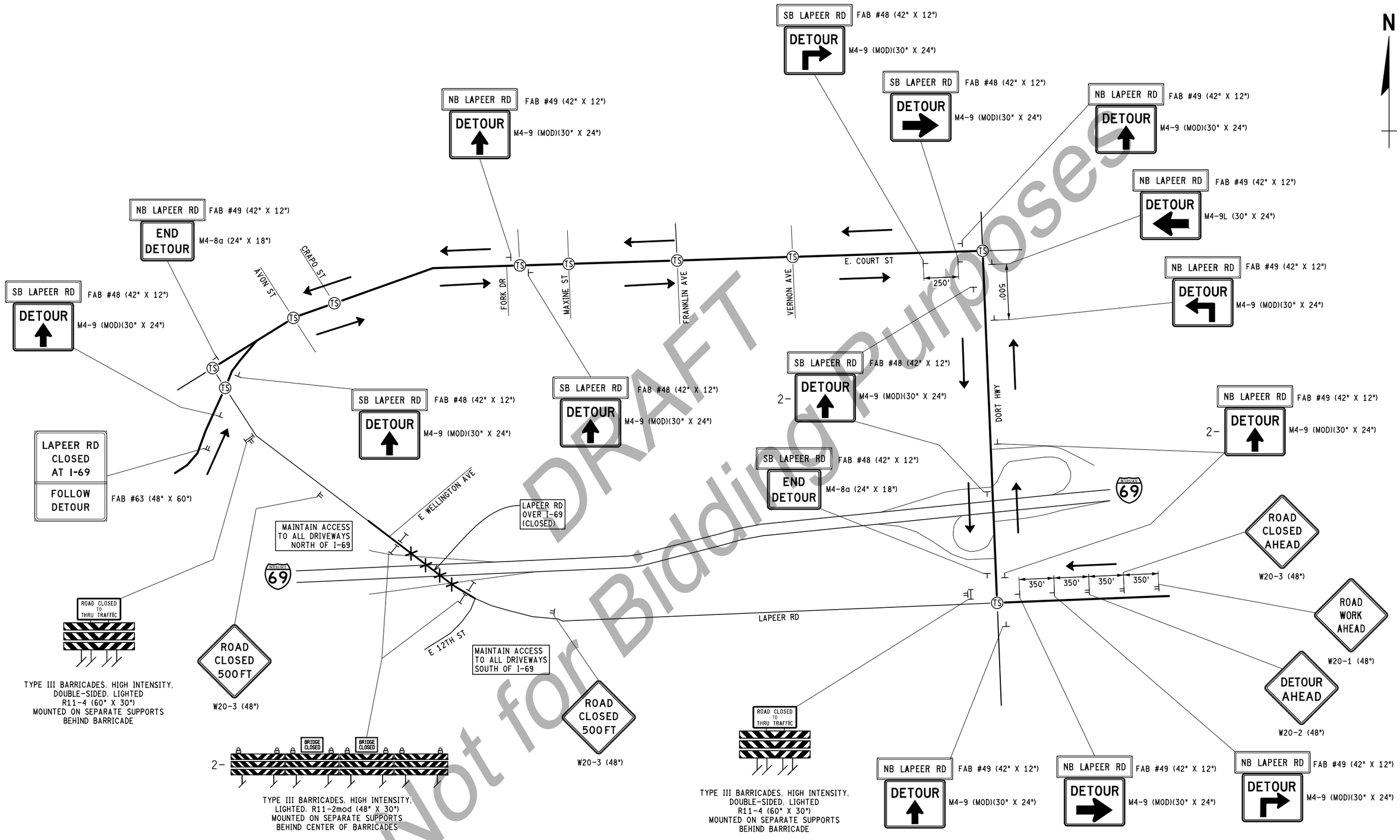

DRAFT
Not for Bidding Purposes

FINAL ROW PLAN REVISIONS (SUBMITTAL DATE:)							
NO.	DATE	AUTH	DESCRIPTION	NO.	DATE	AUTH	DESCRIPTION

AECOM

MDOT Michigan Department of Transportation

NO SCALE

FILE: 132026_I-69_MTDETR0023.dgn

DATE: 07/27/20
DESIGN UNIT: BLOCK
TSC: DAVISON

CS: 25084, 25085
JN: 132026

MAINTAINING TRAFFIC DETOUR PLAN
DETOUR #23
NB & SB LAPEER ROAD

DRAWING: I-69 MOT
SHEET: SECT 1

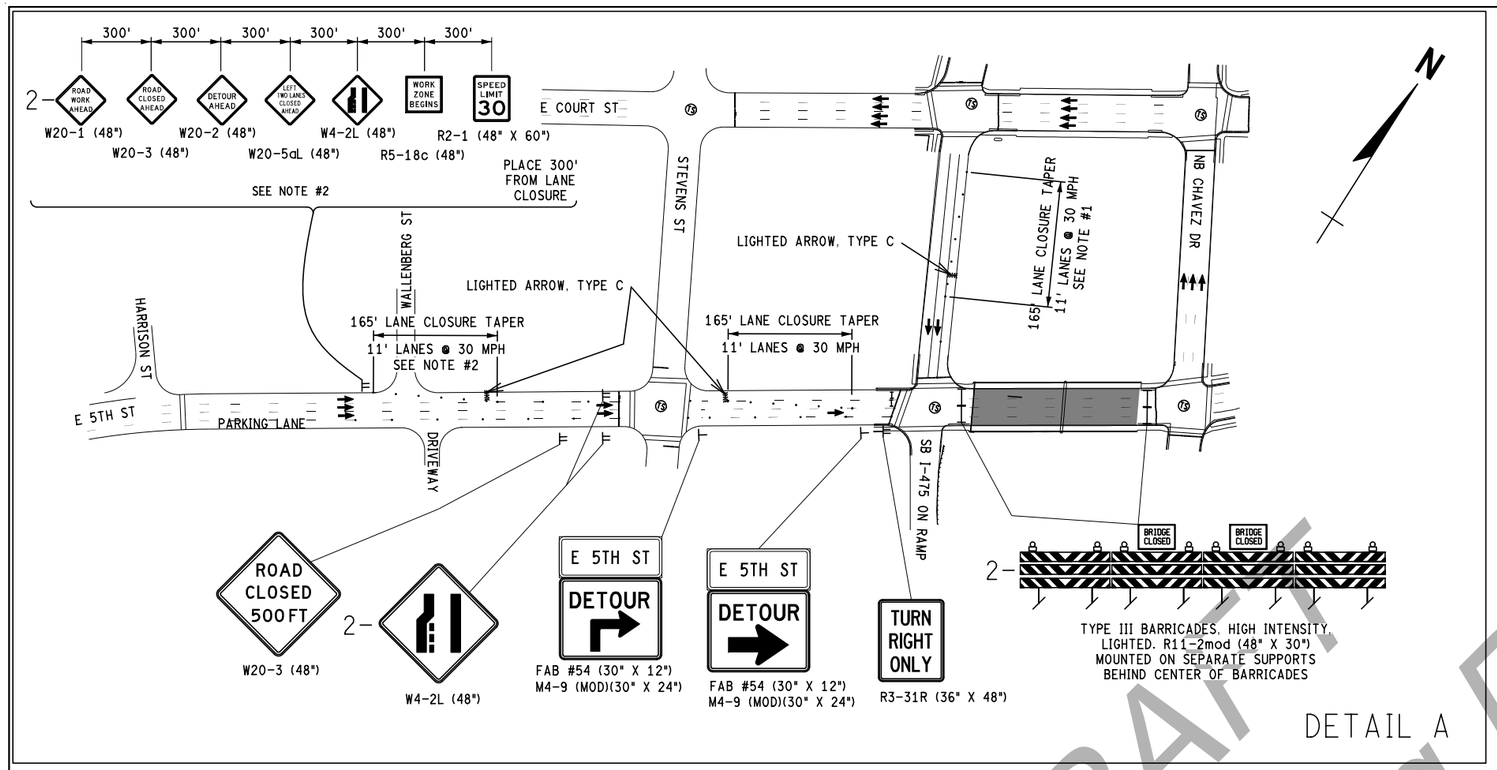

DETAIL A

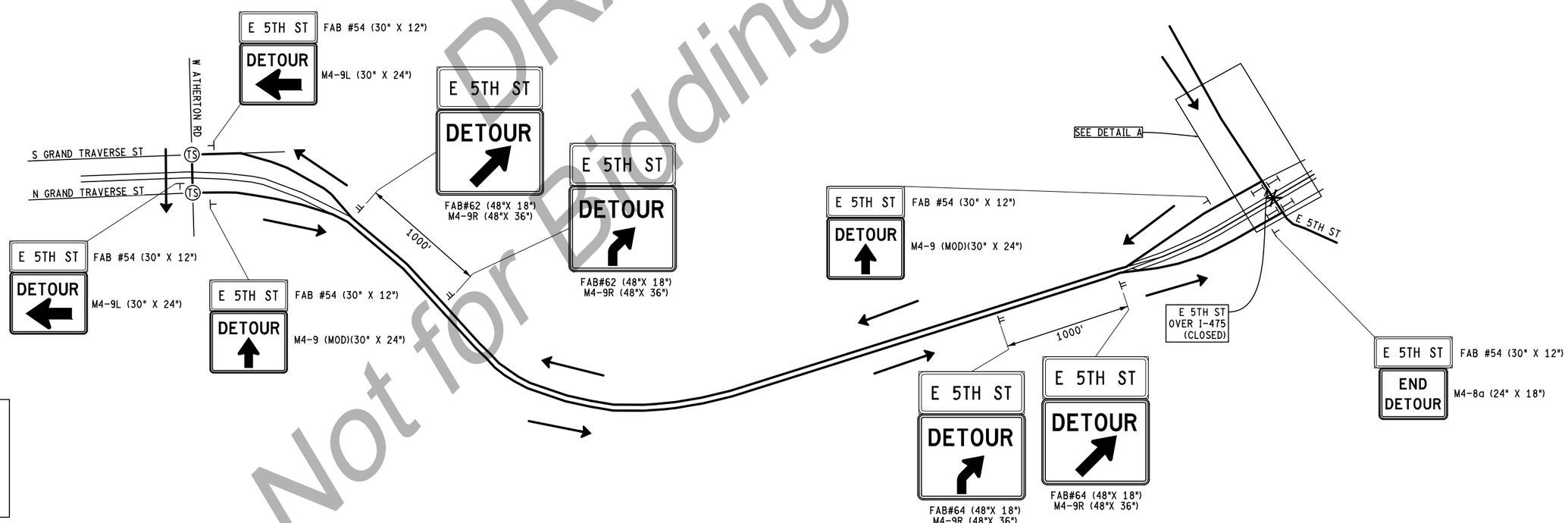

NOTES TO CONTRACTOR:

1. SEE MOT TYPICAL PLAN M0730A FOR LANE CLOSURE APPROACH SIGNING AND OTHER DETAILS.
2. SEE MOT TYPICAL PLAN M0820A FOR LANE CLOSURE APPROACH SIGNING AND OTHER DETAILS.

DRAFT
Not for Bidding Purposes

FINAL ROW PLAN REVISIONS (SUBMITTAL DATE:)							
NO.	DATE	AUTH	DESCRIPTION	NO.	DATE	AUTH	DESCRIPTION

AECOM

MDOT Michigan Department of Transportation

NO SCALE

FILE: 132026_I-69_MTDETR0024.dgn

DATE: 07/27/20
DESIGN UNIT: BLOCK
TSC: DAVISON

CS: 25084, 25085
JN: 132026

MAINTAINING TRAFFIC DETOUR PLAN
DETOUR #24
EAST 5TH STREET

DRAWING: I-69 MOT
SHEET: SECT 1 154

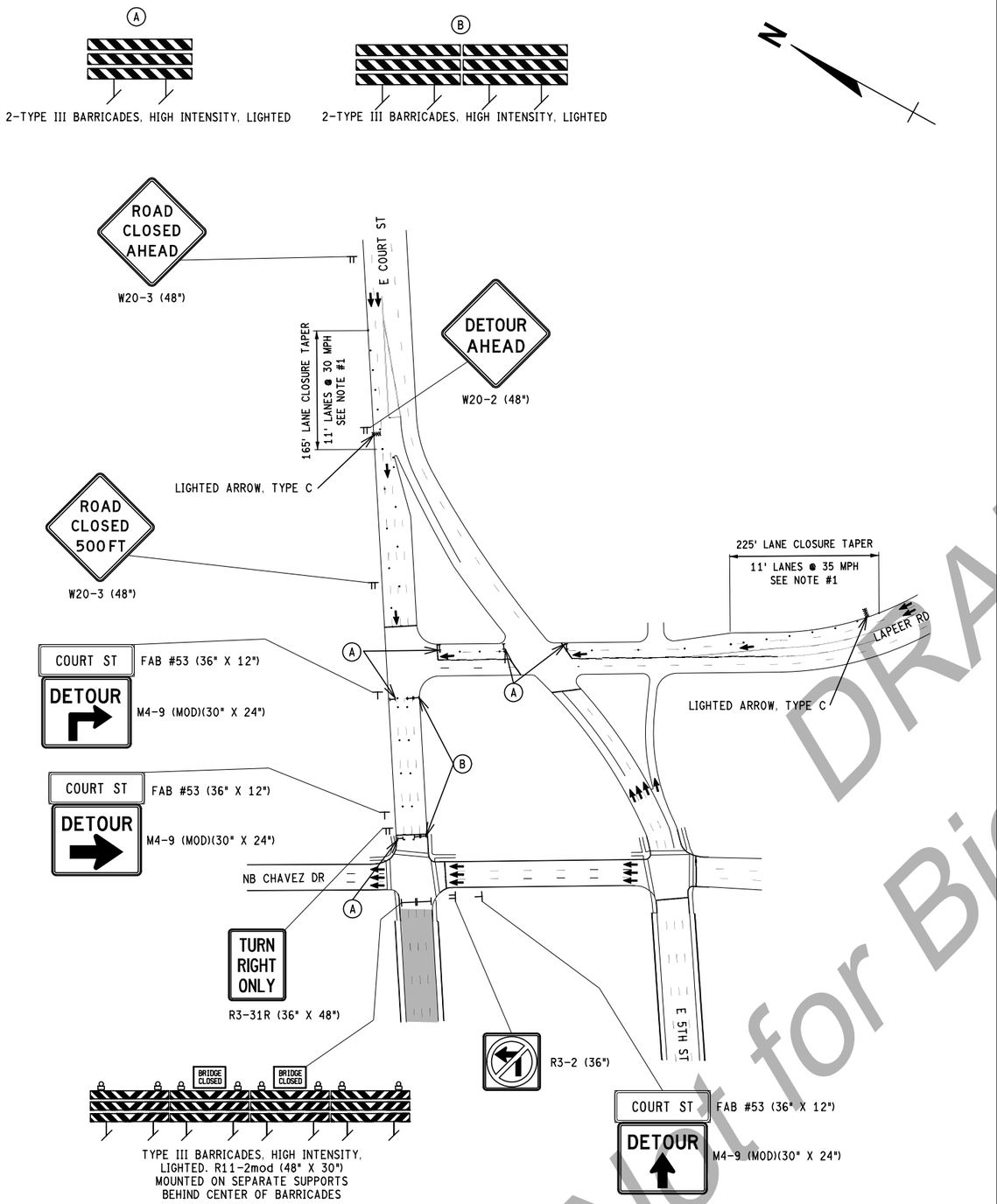

DETAIL A

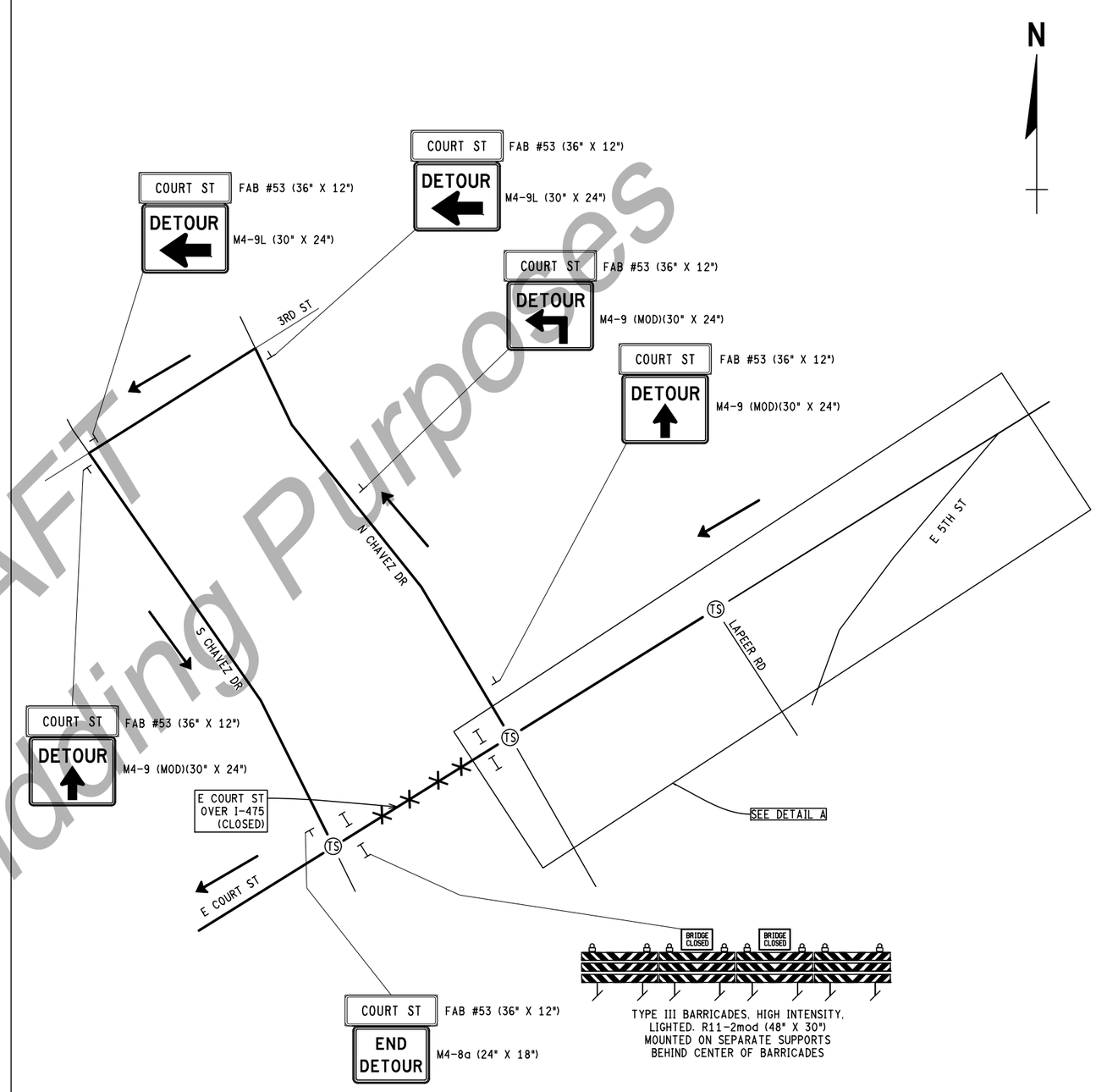

NOTES TO CONTRACTOR:

1. SEE MOT TYPICAL PLAN M0240A FOR LANE CLOSURE APPROACH SIGNING AND OTHER DETAILS.

DRAFT
Not for Bidding Purposes

FINAL ROW PLAN REVISIONS (SUBMITTAL DATE:)							
NO.	DATE	AUTH	DESCRIPTION	NO.	DATE	AUTH	DESCRIPTION

AECOM

MDOT Michigan Department of Transportation

NO SCALE

	DATE: 07/27/20	CS: 25084, 25085	MAINTAINING TRAFFIC DETOUR PLAN	DRAWING / SHEET
	DESIGN UNIT: BLOCK	JN: 132026	DETOUR #25	I-69 MOT / SECT 1
FILE: 132026_I-69_MTDETR0025.dgn	TSC: DAVISON		WB EAST COURT STREET	155

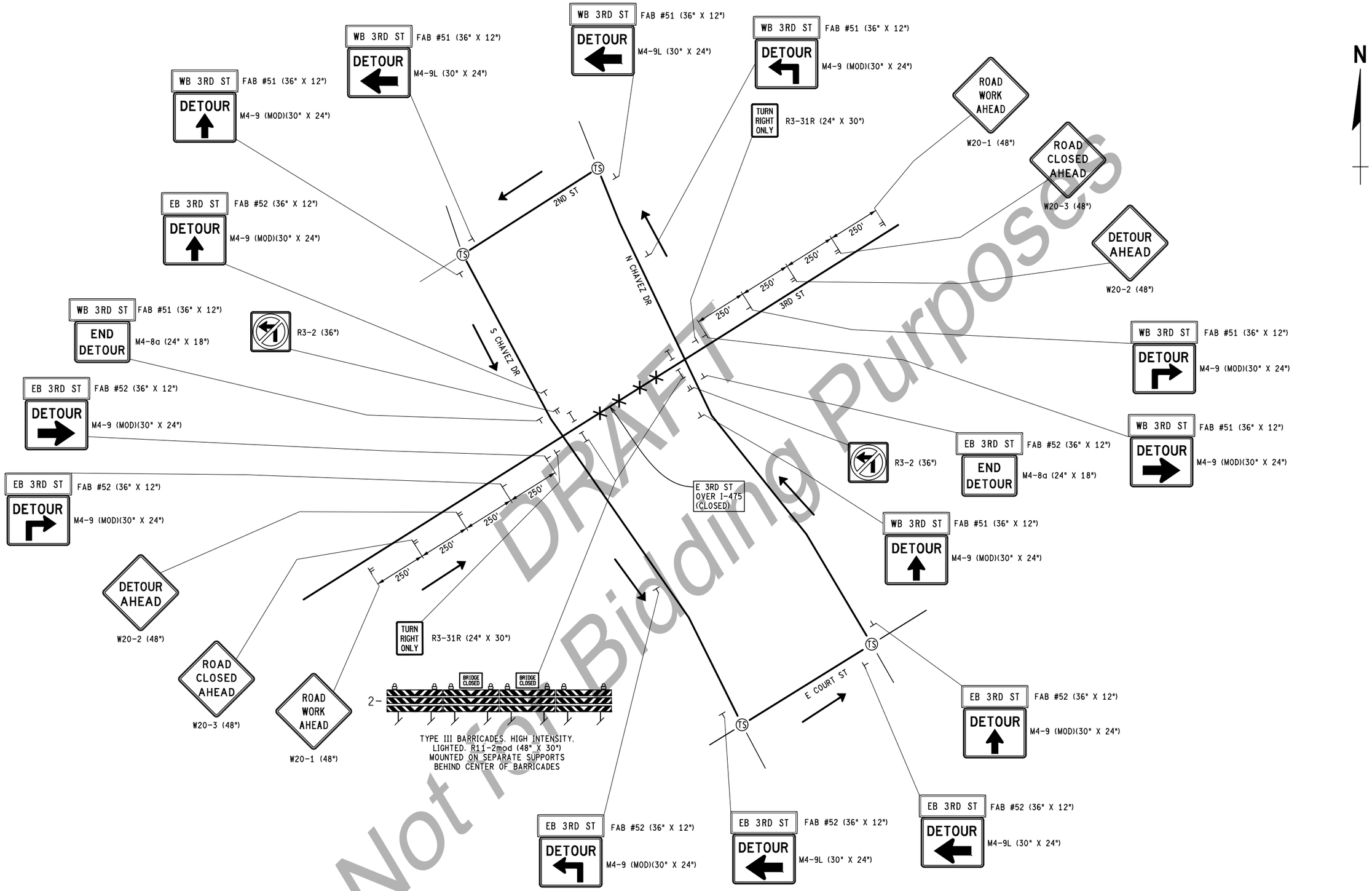

DRAFT
Not for Bidding Purposes

FINAL ROW PLAN REVISIONS (SUBMITTAL DATE:)							
NO.	DATE	AUTH	DESCRIPTION	NO.	DATE	AUTH	DESCRIPTION

AECOM

MDOT Michigan Department of Transportation

NO SCALE

FILE: 132026_I-69_MTDETR0026.dgn

DATE: 07/27/20
DESIGN UNIT: BLOCK
TSC: DAVISON

CS: 25084, 25085
JN: 132026

MAINTAINING TRAFFIC DETOUR PLAN
DETOUR #26
EB & WB 3RD STREET

DRAWING: I-69 MOT
SHEET: SECT 1

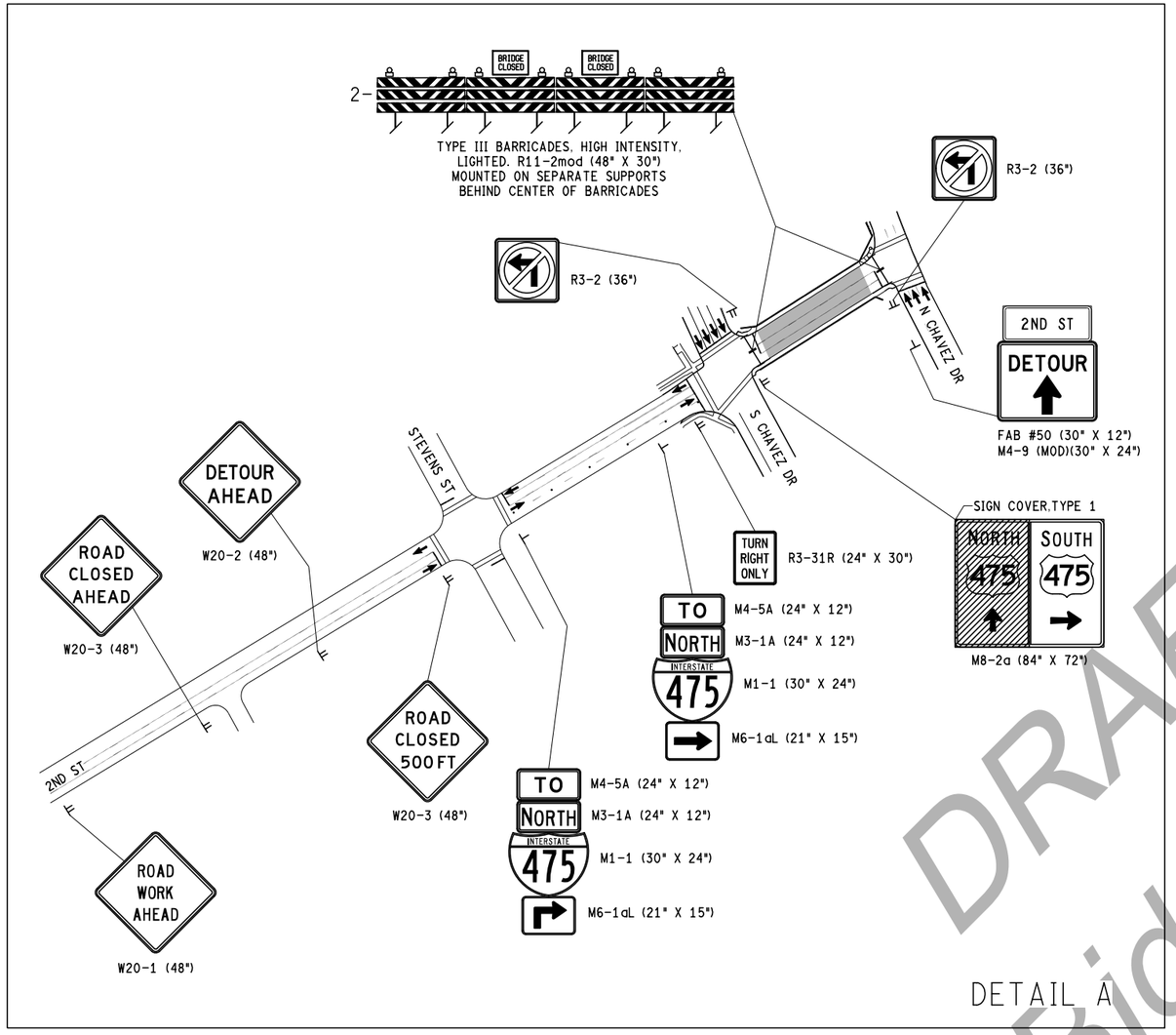

DETAIL A

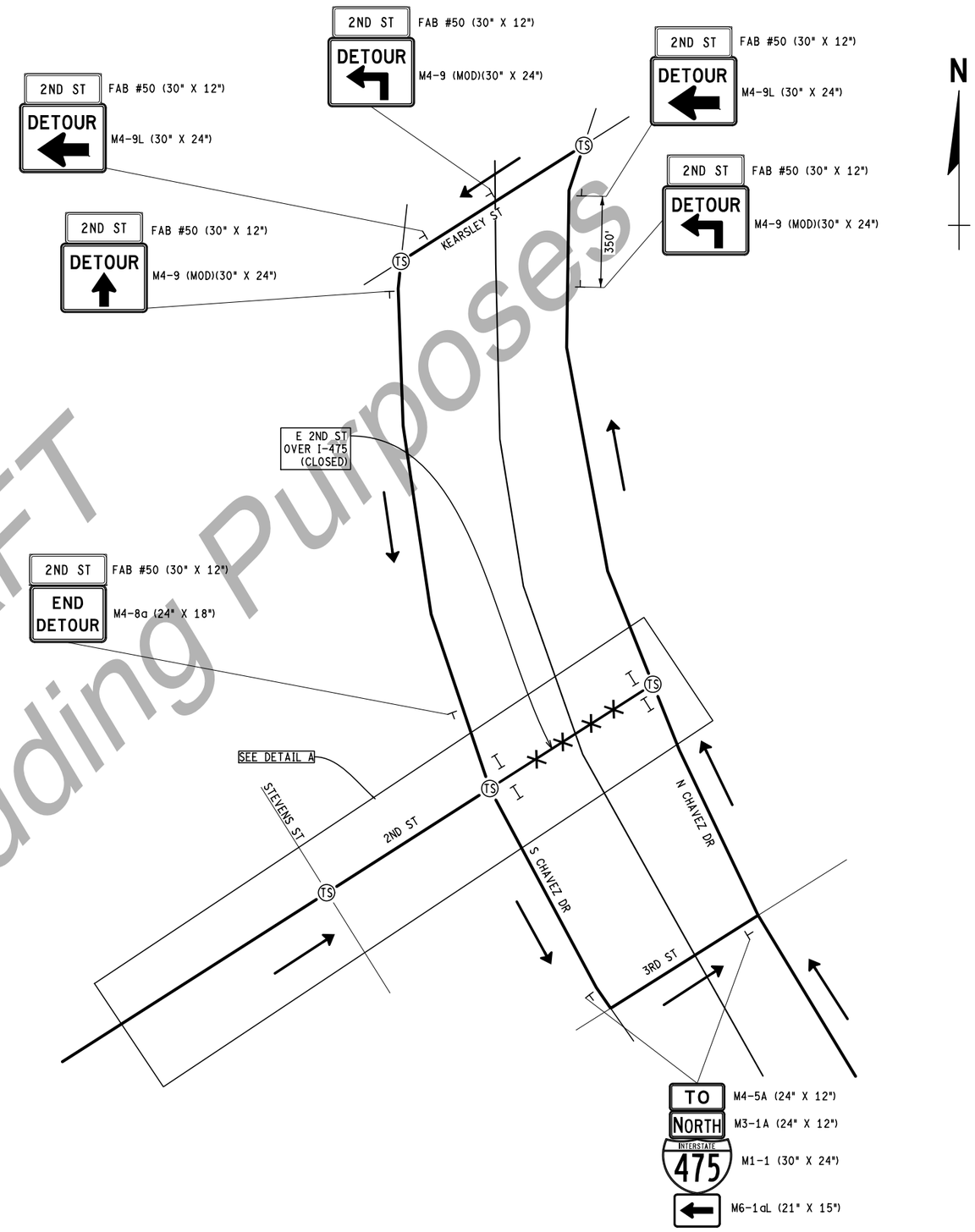

DRAFT
Not for Bidding Purposes

FINAL ROW PLAN REVISIONS (SUBMITTAL DATE:)							
NO.	DATE	AUTH	DESCRIPTION	NO.	DATE	AUTH	DESCRIPTION

AECOM

MDOT Michigan Department of Transportation

NO SCALE

FILE: 132026_I-69_MTDETR0027.dgn

DATE: 07/27/20
DESIGN UNIT: BLOCK
TSC: DAVISON

CS: 25084, 25085
JN: 132026

MAINTAINING TRAFFIC DETOUR PLAN
DETOUR #27
EB & WB 2ND STREET

DRAWING: I-69 MOT
SHEET: SECT 1

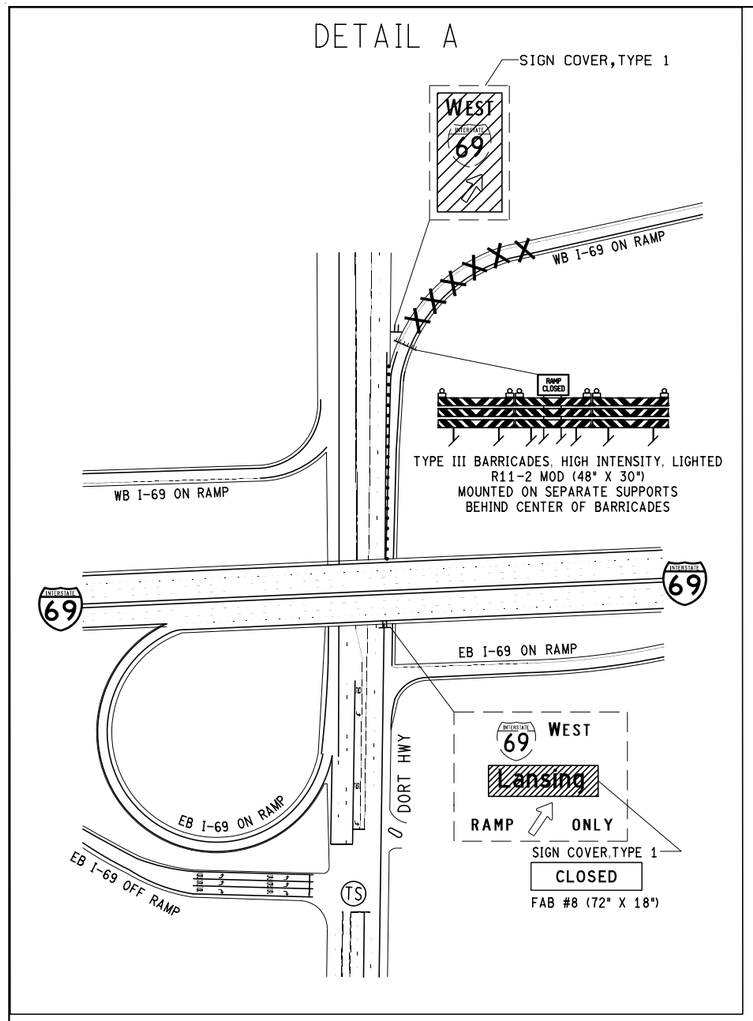

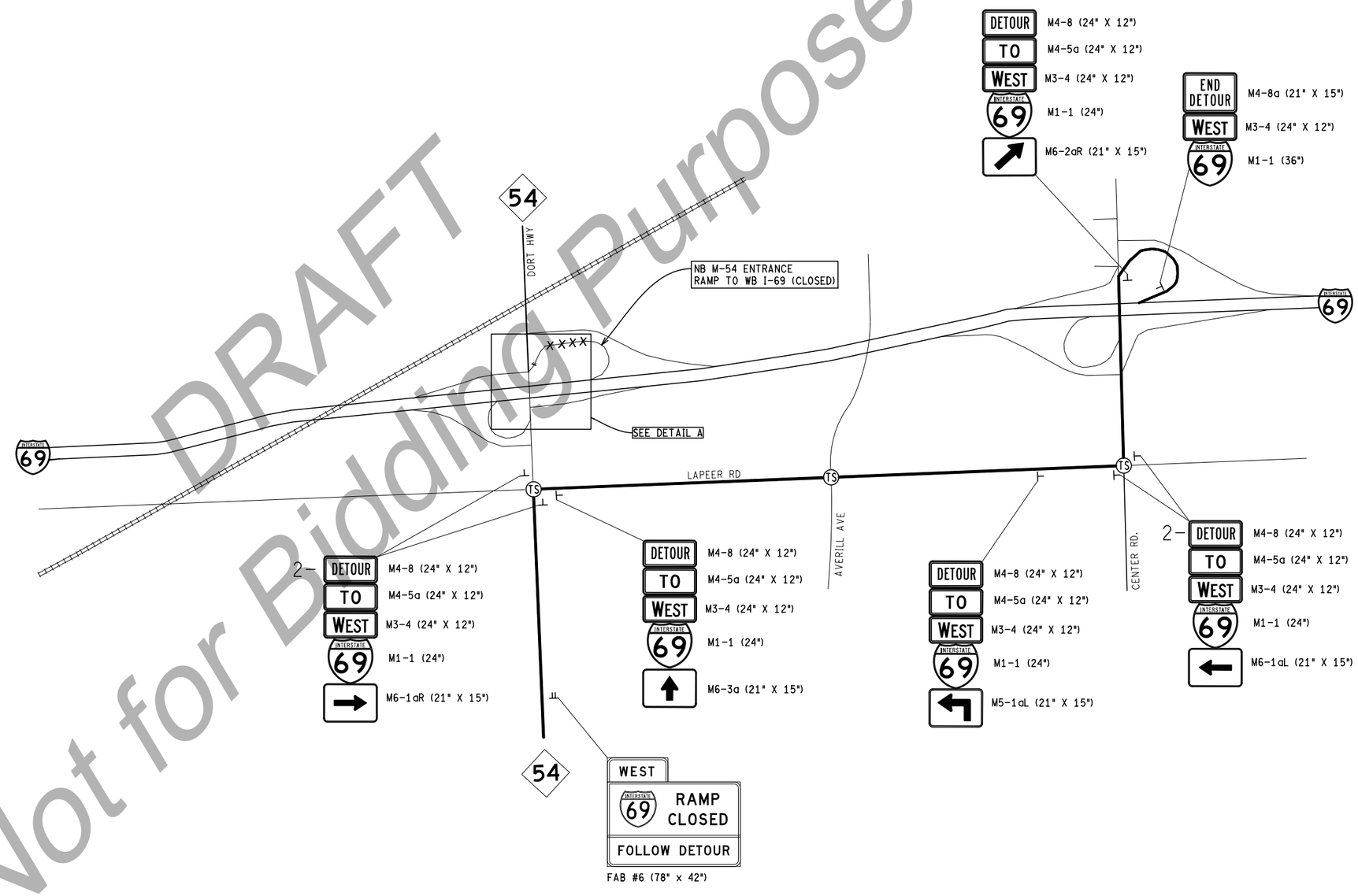

DRAFT
Not for Bidding Purposes

FINAL ROW PLAN REVISIONS (SUBMITTAL DATE:)							
NO.	DATE	AUTH	DESCRIPTION	NO.	DATE	AUTH	DESCRIPTION

AECOM

MDOT Michigan Department of Transportation

NO SCALE

FILE: 132026_I-69_MTDETR0028.dgn

DATE: 07/27/20
DESIGN UNIT: BLOCK
TSC: DAVISON

CS: 25084, 25085
JN: 132026

MAINTAINING TRAFFIC DETOUR PLAN
DETOUR #28
NB M-54 RAMP TO WB I-69

DRAWING: I-69 MOT
SHEET: SECT 1
158

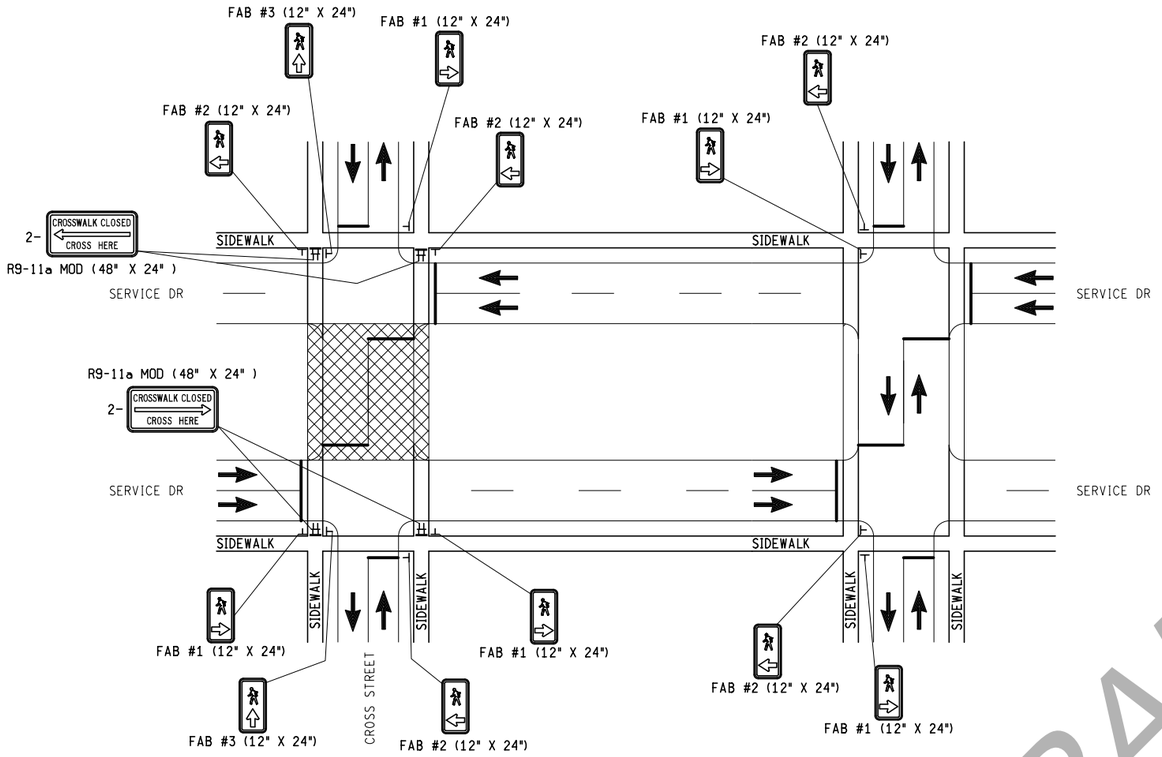

PED DETAIL 1.
BRIDGE SIDEWALK CLOSURES (TYP)

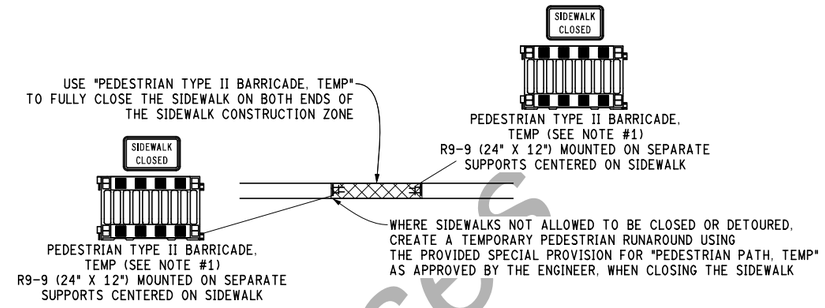

PED DETAIL 2.
SIDEWALK CLOSURE

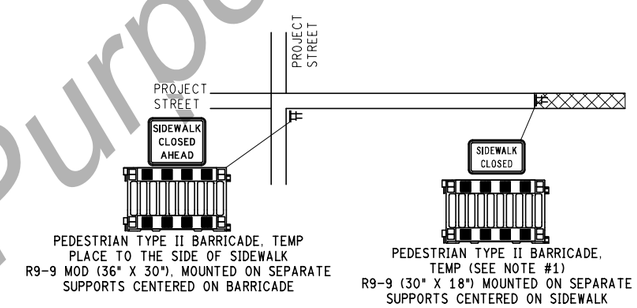

PED DETAIL 3.
ADVANCE SIDEWALK CLOSURE

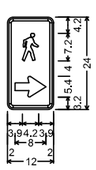

Pedestrian Detour Right;
1.5" Radius, 0.6" Border, 0.4" Indent, Black on, Orange;
Pedestrian Crossing;
Standard Arrow Custom 8.0" X 5.4" 0';

FAB #1

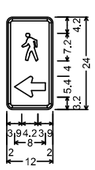

Pedestrian Detour Left;
1.5" Radius, 0.6" Border, 0.4" Indent, Black on, Orange;
Pedestrian Crossing;
Standard Arrow Custom 8.0" X 5.4" 180';

FAB #2

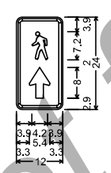

Pedestrian Detour Right;
1.5" Radius, 0.6" Border, 0.4" Indent, Black on, Orange;
Pedestrian Crossing;
Standard Arrow Custom 8.0" X 5.4" 90';

FAB #3

NOTES TO CONTRACTOR:

1. SUPPLY SUFFICIENT NUMBER OF PEDESTRIAN TYPE II BARRICADES TO CONNECT THEM TOGETHER FROM EDGE OF SIDEWALK TO EDGE OF SIDEWALK SUCH THAT THERE ARE NO GAPS BETWEEN BARRICADES.
2. SUPPORTS FOR SIGNS PLACED BEHIND THE BARRICADE(S) MUST BE ENTIRELY LOCATED BEHIND THE BARRICADE(S).
3. THESE DETAILS ARE TO BE USED AS NEEDED IN SITUATIONS REQUIRING PEDESTRIAN FACILITY CLOSURES OR PARTIAL CLOSURES.

DRAFT
Not for Bidding Purposes

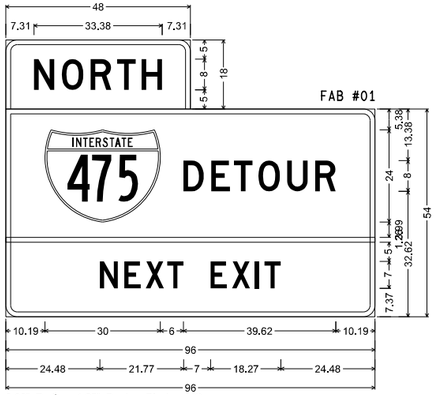

FAB #01

3.00" Radius, 1.25" Border, Black on Orange;
[NORTH] D;
3.00" Radius, 1.25" Border, Black on Orange;
[DETOUR] D; [NEXT EXIT] D;
Table of widths and spaces.

| | | |

FAB #11

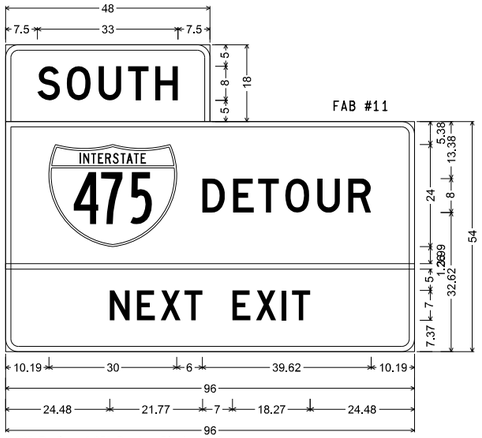

3.00" Radius, 1.25" Border, Black on Orange;
[SOUTH] D;
3.00" Radius, 1.25" Border, Black on Orange;
[DETOUR] D; [NEXT EXIT] D;
Table of widths and spaces.

7.50	S 5.37	1.50	O 5.63	1.88	U 5.37	1.50	T 4.88	1.50	H 5.37	7.50						
10.19	30.00															
	6.00	D 5.37	1.88	E 4.87	1.00	T 4.88	1.50	O 5.62	1.88	U 5.37	1.88	R 5.37	10.19			
-0.00	96.00	0.00														
24.48	N 4.71	1.64	E 4.26	1.32	X 4.70	0.87	T 4.27									
	7.00	E 4.27	1.31	X 4.70	1.31	I 1.10	1.31	T 4.27	24.48							

FAB #12

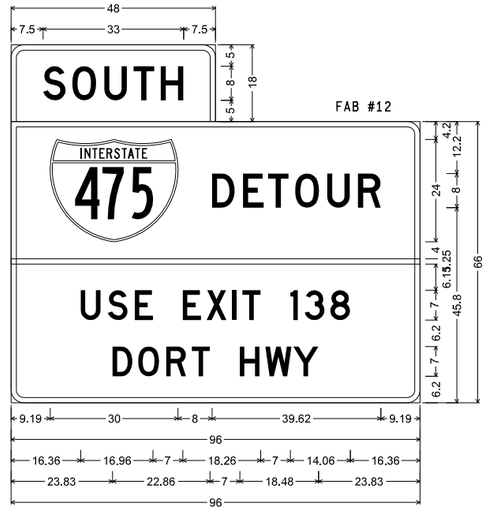

3.00" Radius, 1.25" Border, Black on Orange;
[SOUTH] D;
3.00" Radius, 1.25" Border, Black on Orange;
[DETOUR] D; [USE EXIT 138] D; [DORT HWY] D;
Table of widths and spaces.

7.50	S 5.37	1.50	O 5.63	1.88	U 5.37	1.50	T 4.88	1.50	H 5.37	7.50						
9.19	30.00															
	8.00	D 5.37	1.88	E 4.87	1.00	T 4.88	1.50	O 5.62	1.88	U 5.37	1.88	R 5.37	9.19			
-0.00	96.00	0.00														
16.36	U 4.71	1.64	S 4.70	1.64	E 4.27											
	7.00	E 4.26	1.31	X 4.71	1.31	I 1.09	1.32	T 4.26								
	7.00	I 1.70	1.64	3 4.70	1.31	8 4.71	16.36									
23.83	D 4.70	1.31	O 4.93	1.64	R 4.70	1.31	T 4.27									
	7.00	H 4.70	1.31	W 6.13	0.44	Y 5.90	23.83									

FAB #13

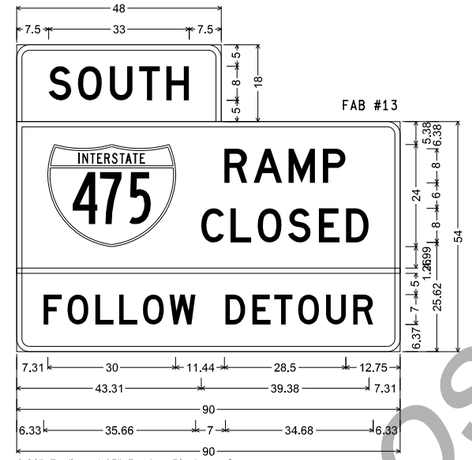

3.00" Radius, 1.25" Border, Black on Orange;
[SOUTH] D;
3.00" Radius, 1.25" Border, Black on Orange;
[RAMP] D; [CLOSED] D; [FOLLOW DETOUR] D;
Table of widths and spaces.

7.50	S 5.37	1.50	O 5.63	1.88	U 5.37	1.50	T 4.88	1.50	H 5.37	7.50						
7.31	30.00	11.44	R 5.37	1.50	A 6.69	1.50	M 6.19	1.88	P 5.37	12.75						
43.31	C 5.38	1.50	L 4.87	1.50	O 5.63	1.50	S 5.37	1.88	E 4.87	1.50	D 5.38	7.31				
-0.00	90.00	0.00														
6.33	F 4.27	1.31	O 4.92	1.65	L 4.26	1.31	L 4.27	1.31	O 4.92	1.32	W 6.12					
	7.00	D 4.70	1.65	E 4.26	0.88	T 4.26	1.31	O 4.93	1.64	U 4.70	1.64	R 4.71	6.33			

FAB #14

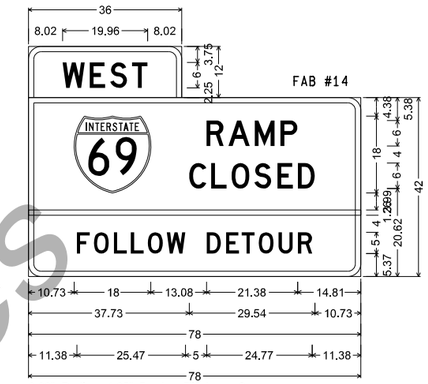

3.00" Radius, 1.25" Border, Black on Orange;
[WEST] D;
3.00" Radius, 1.25" Border, Black on Orange;
Interstate 69 9.00" C; [RAMP] D; [CLOSED] D;
[FOLLOW DETOUR] D;
Table of widths and spaces.

8.02	W 5.25	1.12	E 3.66	1.12	S 4.03	1.13	T 3.65	8.02								
10.73	69 18.00	13.08	R 4.03	1.13	A 5.01	1.13	M 4.64	1.41	P 4.03	14.81						
37.73	C 4.04	1.12	L 3.66	1.12	O 4.22	1.13	S 4.03	1.40	E 3.66	1.12	D 4.04	10.73				
-0.00	78.00	0.00														
11.38	F 3.05	0.94	O 3.51	1.17	L 3.05	0.94	L 3.05	0.93	O 3.52	0.94	W 4.37					
	5.00	D 3.36	1.17	E 3.05	0.62	T 3.05	0.94	O 3.51	1.18	U 3.36	1.17	R 3.36	11.38			

FAB #15

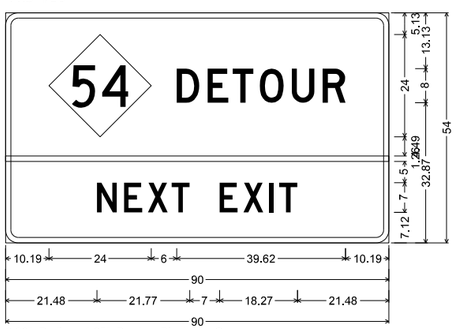

3.00" Radius, 1.25" Border, Black on Orange;
State Highway 54 M1-6a; [DETOUR] D; [NEXT EXIT] D;
Table of widths and spaces.

10.19	54 24.00															
	6.00	D 5.37	1.88	E 4.87	1.00	T 4.88	1.50	O 5.62	1.88	U 5.37	1.88	R 5.37	10.19			
-0.00	90.00	0.00														
21.48	N 4.71	1.64	E 4.26	1.32	X 4.70	0.87	T 4.27									
	7.00	E 4.27	1.31	X 4.70	1.31	I 1.10	1.31	T 4.27	21.48							

FAB #16

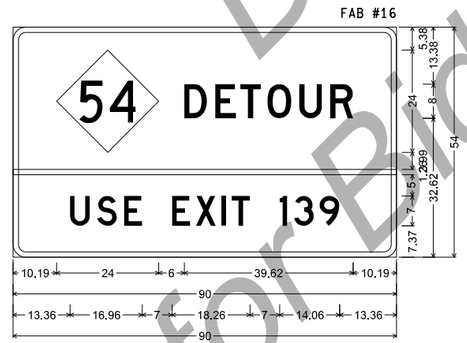

3.00" Radius, 1.25" Border, Black on Orange;
State Highway 54 M1-6a; [DETOUR] D; [USE EXIT 139] D;
Table of widths and spaces.

10.19	54 24.00															
	6.00	D 5.37	1.88	E 4.87	1.00	T 4.88	1.50	O 5.62	1.88	U 5.37	1.88	R 5.37	10.19			
-0.00	90.00	0.00														
13.36	U 4.71	1.64	S 4.70	1.64	E 4.27											
	7.00	E 4.26	1.31	X 4.71	1.31	I 1.09	1.32	T 4.26								
	7.00	I 1.70	1.64	3 4.70	1.31	9 4.71	13.36									

FAB #17

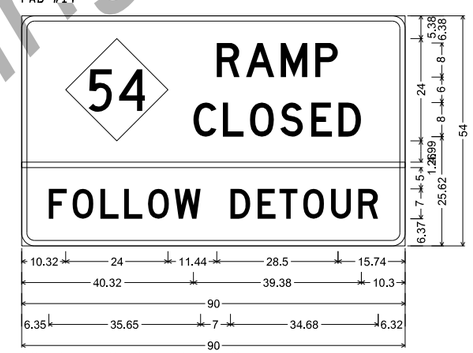

3.00" Radius, 1.25" Border, Black on Orange;
State Highway 54 M1-6a; [RAMP] D; [CLOSED] D;
[FOLLOW DETOUR] D;
Table of widths and spaces.

10.32	54 24.00	11.44	R 5.38	1.50	A 6.68	1.50	M 6.19	1.88	P 5.37	15.74						
40.32	C 5.38	1.50	L 4.87	1.50	O 5.63	1.50	S 5.37	1.88	E 4.87	1.50	D 5.38	10.30				
-0.00	90.00	0.00														
6.35	F 4.26	1.31	O 4.93	1.64	L 4.26	1.32	L 4.26	1.31	O 4.93	1.31	W 6.12					
	7.00	D 4.71	1.64	E 4.26	0.88	T 4.26	1.32	O 4.92	1.64	U 4.70	1.64	R 4.71	6.32			

DRAFT
Not for Bidding

FINAL ROW PLAN REVISIONS (SUBMITTAL DATE:)							
NO.	DATE	AUTH	DESCRIPTION	NO.	DATE	AUTH	DESCRIPTION

AECOM | MDOT Michigan Department of Transportation | NO SCALE

FILE: 132026_I-69_MTFAB2.dgn

DATE: 07/27/20
DESIGN UNIT: BLOCK
TSC: DAVISON

CS: 25084, 25085
JN: 132026

MAINTAINING TRAFFIC DETOUR PLAN
TEMPORARY SIGN FABRICATIONDETAILS 11-17

DRAWING: I-69 MOT
SHEET: SECT 1 161

FAB #20

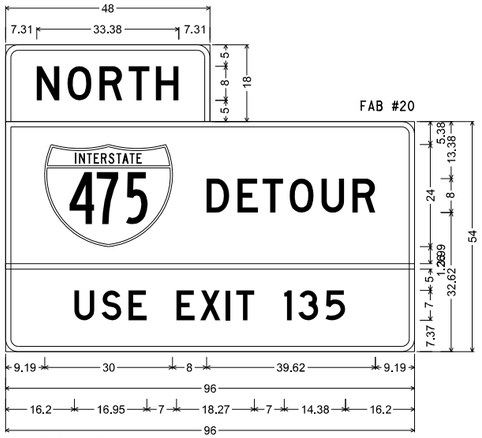

3.00" Radius, 1.25" Border, Black on Orange;
[NORTH] D;
3.00" Radius, 1.25" Border, Black on Orange;
[DETOUR] D; [USE EXIT 135] D;
Table of widths and spaces.

7.31	N 5.38	1.87	O 5.63	1.87	R 5.38	1.50	T 4.87	1.50	H 5.38	7.31				
9.19	30.00													
	8.00	D 5.37	1.88	E 4.87	1.00	T 4.88	1.50	O 5.62	1.88	U 5.37	1.88	R 5.37	9.19	
-0.00	96.00	0.00												
16.20	U 4.70	1.64	S 4.71	1.64	E 4.26									
	7.00	E 4.27	1.31	X 4.70	1.32	I 1.09	1.31	T 4.27						
	7.00	I 1.69	1.64	3 4.71	1.64	5 4.70	16.20							

FAB #22

3.00" Radius, 0.75" Border, Black on Orange;
[LOCAL] C;
[BUSINESSES] C; [OPEN] C;
Table of widths and spaces.

12.57	L 2.50	0.85	O 2.89	0.84	C 2.74	0.57	A 3.12	0.84	L 2.50	12.58														
	4.15	B 2.74	1.05	U 2.73	1.06	S 2.73	1.05	I 0.71	1.05	N 2.73	1.06	E 2.50	0.84	S 2.74	0.84	S 2.74	1.05	E 2.50	0.84	S 2.74	4.15			
14.10	O 2.89	1.05	P 2.73	1.06	E 2.50	0.84	N 2.73	14.10																

FAB #23

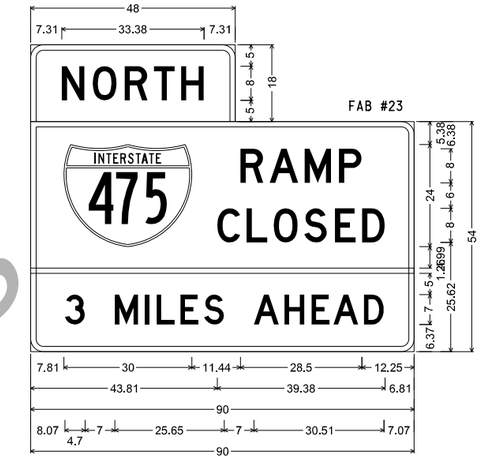

3.00" Radius, 1.25" Border, Black on Orange;
[NORTH] D;
3.00" Radius, 1.25" Border, Black on Orange;
[RAMP] D; [CLOSED] D; [3 MILES AHEAD] D;
Table of widths and spaces.

7.31	N 5.38	1.87	O 5.63	1.87	R 5.38	1.50	T 4.87	1.50	H 5.38	7.31														
7.81	30.00	11.44	R 5.37	1.50	A 6.69	1.50	M 6.19	1.88	P 5.37	12.25														
43.81	C 5.38	1.50	L 4.87	1.50	O 5.63	1.50	S 5.37	1.88	E 4.87	1.50	D 5.38	6.81												
-0.00	90.00	0.00																						
8.07	3 4.70	7.00	M 5.41	1.64	I 1.10	1.64	L 4.26	1.32	E 4.26	1.32	S 4.70													
	7.00	A 5.85	1.31	H 4.71	1.64	E 4.26	0.88	A 5.85	1.31	D 4.70	7.07													

FAB #24

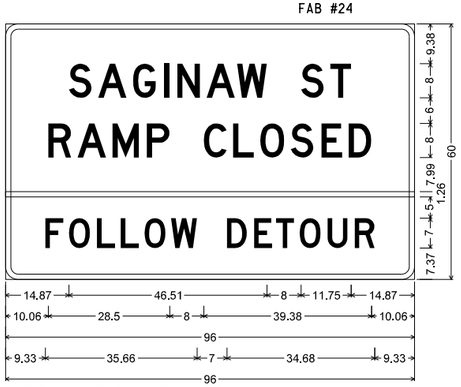

3.00" Radius, 1.25" Border, Black on Orange;
[SAGINAW ST] D; [RAMP CLOSED] D; [FOLLOW DETOUR] D;
Table of widths and spaces.

14.87	S 5.38	1.50	A 6.69	1.50	G 5.37	1.88	I 1.25	1.87	N 5.38	1.50	A 6.69	0.50	W 7.00	
	8.00	S 5.37	1.50	T 4.88	14.87									
10.06	R 5.38	1.50	A 6.68	1.50	M 6.19	1.88	P 5.37							
	8.00	C 5.38	1.50	L 4.87	1.50	O 5.63	1.50	S 5.37	1.88	E 4.87	1.50	D 5.38	10.06	
-0.00	96.00	0.00												
9.33	F 4.27	1.31	O 4.92	1.65	L 4.26	1.31	L 4.27	1.31	O 4.92	1.32	W 6.12			
	7.00	D 4.70	1.65	E 4.26	0.88	T 4.26	1.31	O 4.93	1.64	U 4.70	1.64	R 4.71	9.33	

FAB #25

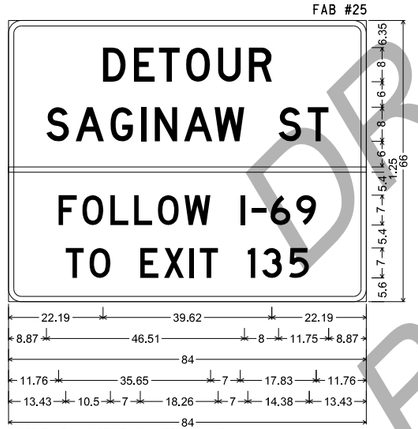

3.00" Radius, 1.25" Border, Black on Orange;
[DETOUR] D; [SAGINAW ST] D; [FOLLOW I-69] D;
[TO EXIT 135] D;
Table of widths and spaces.

22.19	D 5.37	1.88	E 4.87	1.00	T 4.88	1.50	O 5.62	1.88	U 5.37	1.88	R 5.37	22.19		
8.87	S 5.38	1.50	A 6.69	1.50	G 5.37	1.88	I 1.25	1.87	N 5.38	1.50	A 6.69	0.50	W 7.00	
	8.00	S 5.37	1.50	T 4.88	8.87									
-0.00	84.00	0.00												
11.76	F 4.26	1.32	O 4.92	1.64	L 4.26	1.32	L 4.26	1.31	O 4.93	1.31	W 6.12			
	7.00	I 1.10	1.64	- 3.50	0.87	6 4.71	1.31	9 4.70	11.76					
13.43	T 4.26	1.31	O 4.93											
	7.00	E 4.26	1.31	X 4.71	1.31	I 1.09	1.32	T 4.26						
	7.00	I 1.70	1.64	3 4.70	1.64	5 4.70	13.43							

FAB #26

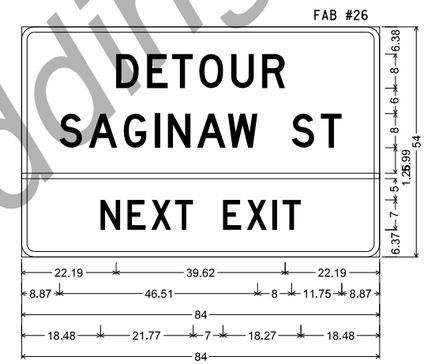

3.00" Radius, 1.25" Border, Black on Orange;
[DETOUR] D; [SAGINAW ST] D; [NEXT EXIT] D;
Table of widths and spaces.

22.19	D 5.37	1.88	E 4.87	1.00	T 4.88	1.50	O 5.62	1.88	U 5.37	1.88	R 5.37	22.19		
8.87	S 5.38	1.50	A 6.69	1.50	G 5.37	1.88	I 1.25	1.87	N 5.38	1.50	A 6.69	0.50	W 7.00	
	8.00	S 5.37	1.50	T 4.88	8.87									
-0.00	84.00	0.00												
18.48	N 4.71	1.64	E 4.26	1.32	X 4.70	0.87	T 4.27							
	7.00	E 4.27	1.31	X 4.70	1.31	I 1.10	1.31	T 4.27	18.48					

FAB #27

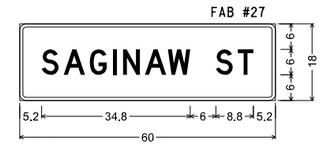

1.5" Radius, 0.8" Border, Black on Orange;
[SAGINAW ST] D;
Table of widths and spaces.

5.2	S 4.0	1.1	A 5.0	1.2	G 4.0	1.4	I 0.9	1.4	N 4.1	1.1	A 5.0	0.4	W 5.2	
	6.0	S 4.1	1.1	T 3.6	5.2									

FAB #28

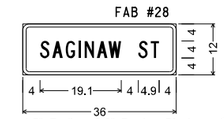

1.5" Radius, 0.8" Border, Black on Orange;
[SAGINAW ST] C;
Table of widths and spaces.

4.0	S 2.2	0.7	A 2.5	0.7	G 2.2	0.8	I 0.6	0.8	N 2.2	0.7	A 2.5	0.2	W 3.0	
	4.0	S 2.2	0.7	T 2.0	4.0									

DRAFT
Not for Bidding Purposes

FINAL ROW PLAN REVISIONS (SUBMITTAL DATE:)							
NO.	DATE	AUTH	DESCRIPTION	NO.	DATE	AUTH	DESCRIPTION

AECOM

MDOT Michigan Department of Transportation

NO SCALE

FILE: 132026_I-69_MTFAB3.dgn

DATE: 07/27/20
DESIGN UNIT: BLOCK
TSC: DAVISON

CS: 25084, 25085
JN: 132026

MAINTAINING TRAFFIC DETOUR PLAN
TEMPORARY SIGN FABRICATIONDETAILS 20-28

DRAWING: I-69 MOT
SHEET: SECT 1

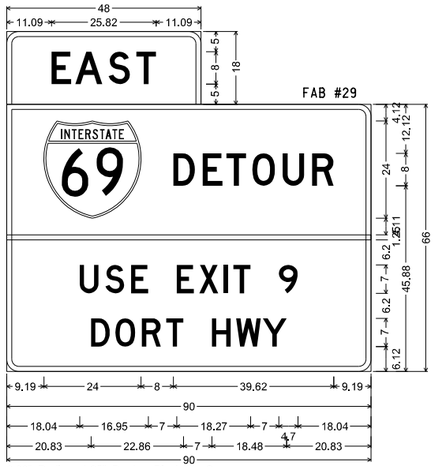

FAB #29

3.00" Radius, 1.25" Border, Black on Orange;
[EAST] D;
3.00" Radius, 1.25" Border, Black on Orange;
[DETOUR] D; [USE EXIT 9] D; [DORT HWY] D;
Table of widths and spaces.

| | | |

FAB #40

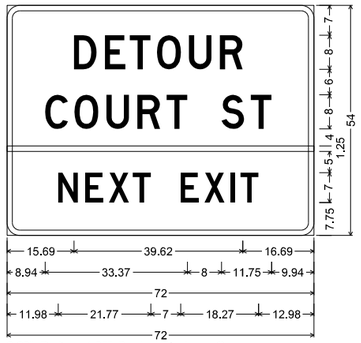

3.00" Radius, 1.25" Border, Black on Orange;
[DETOUR] D; [COURT ST] D; [NEXT EXIT] D;
Table of widths and spaces.

	D		E		T		O		U		R								
15.69	5.37	1.88	4.87	1.00	4.88	1.50	5.62	1.88	5.37	1.88	5.37	16.69							
	C		O		U		R		T										
8.94	5.37	1.50	5.63	1.87	5.38	1.87	5.38	1.50	4.87										
		S		T															
	8.00	5.38	1.50	4.87	9.94														
-0.00	72.00	0.00																	
	N		E		X		T												
11.98	4.71	1.64	4.26	1.32	4.70	0.87	4.27												
		E		X		I		T											
	7.00	4.27	1.31	4.70	1.31	1.10	1.31	4.27	12.98										

FAB #41

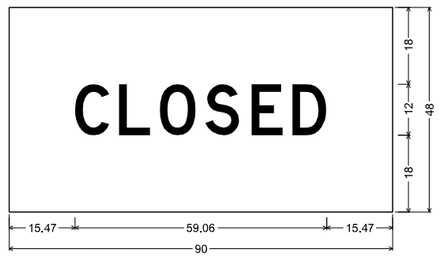

No Border, White on Orange;
[CLOSED] Black D;
Table of widths and spaces.

	C		L		O		S		E		D	
15.47	8.06	2.25	7.31	2.25	8.44	2.25	8.06	2.82	7.31	2.25	8.06	15.47

FAB #42

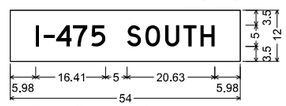

No Border, Orange on Orange;
[I-475 SOUTH] Black D;
Table of widths and spaces.

5.98	I		-		4		7				5	
	0.79	1.17	2.50	0.31	3.67	0.31	3.36	0.94			3.36	
		S		O		U		T		H		
	5.00	3.36	0.94	3.51	1.18	3.35	0.94	3.05	0.94	3.36	5.98	

FAB #43

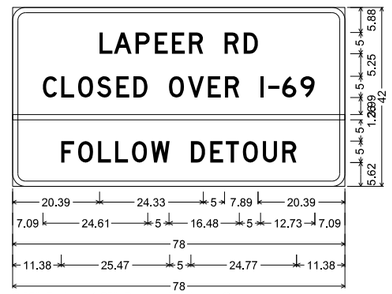

3.00" Radius, 1.25" Border, Black on Orange;
[LAPEER RD] D; [CLOSED OVER I-69] D;
[FOLLOW DETOUR] D;
Table of widths and spaces.

	L		A		P		E		E		R								
20.39	3.04	0.32	4.18	0.93	3.36	1.17	3.05	0.94	3.05	0.93	3.36								
	R		D																
	5.00	3.36	1.17	3.36	20.39														
7.09	C		L		O		S		E		D								
	3.35	0.94	3.05	0.94	3.51	0.94	3.36	1.17	3.05	0.94	3.36								
	O		V		E		R												
	5.00	3.51	0.94	3.75	0.94	3.04	0.94	3.36											
	I		-		6		9												
	5.00	0.78	1.17	2.50	0.63	3.36	0.94	3.35	7.09										
-0.00	78.00	0.00																	
	F		O		L		L		O		W								
11.38	3.05	0.94	3.51	1.17	3.05	0.94	3.05	0.93	3.52	0.94	4.37								
		D		E		T		O		U		R							
	5.00	3.36	1.17	3.05	0.62	3.05	0.94	3.51	1.18	3.36	1.17	3.36	11.38						

FAB #44

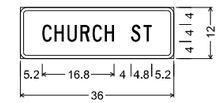

1.5" Radius, 0.8" Border, Black on Orange;
[CHURCH ST] C;
Table of widths and spaces.

	C		H		U		R		C		H								
5.2	2.1	0.7	2.2	0.8	2.2	0.9	2.2	0.6	2.2	0.7	2.2								
		S		T															
	4.0	2.2	0.6	2.0	5.2														

FAB #45

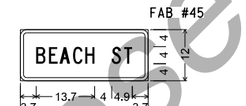

1.5" Radius, 0.8" Border, Black on Orange;
[BEACH ST] C;
Table of widths and spaces.

	B		E		A		C		H										
3.7	2.2	0.8	2.0	0.5	2.5	0.7	2.2	0.6	2.2										
		S		T															
	4.0	2.2	0.7	2.0	3.7														

FAB #46

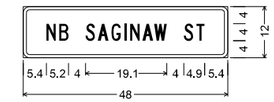

1.5" Radius, 0.8" Border, Black on Orange;
[NB SAGINAW ST] C;
Table of widths and spaces.

	N		B																
5.4	2.2	0.9	2.1																
		S		A		G		I		N		A		W					
	4.0	2.2	0.7	2.5	0.7	2.2	0.8	0.6	0.8	2.2	0.7	2.5	0.2	3.0					
		S		T															
	4.0	2.2	0.7	2.0	5.4														

FAB #47

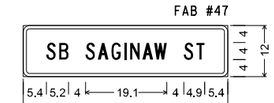

1.5" Radius, 0.8" Border, Black on Orange;
[SB SAGINAW ST] C;
Table of widths and spaces.

	S		B																
5.4	2.2	0.9	2.1																
		S		A		G		I		N		A		W					
	4.0	2.2	0.7	2.5	0.7	2.2	0.8	0.6	0.8	2.2	0.7	2.5	0.2	3.0					
		S		T															
	4.0	2.2	0.7	2.0	5.4														

FAB #48

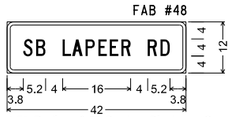

1.5" Radius, 0.8" Border, Black on Orange;
[SB LAPEER RD] C;
Table of widths and spaces.

	S		B																
3.8	2.2	0.8	2.2																
		L		A		P		E		E		R							
	4.0	2.0	0.2	2.5	0.7	2.2	0.8	2.0	0.7	2.0	0.7	2.2							
		R		D															
	4.0	2.2	0.8	2.2	3.8														

FAB #50

1.5" Radius, 0.8" Border, Black on Orange;
[2ND ST] C;
Table of widths and spaces.

	2		N		D														
6.3	2.2	1.1	2.2	0.8	2.2														
		S		T															
	4.0	2.2	0.7	2.0	6.3														

FAB #52

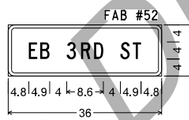

1.5" Radius, 0.8" Border, Black on Orange;
[EB 3RD ST] C;
Table of widths and spaces.

	E		B																
4.8	2.0	0.7	2.2																
		3		R		D													
	4.0	2.2	1.2	2.2	0.8	2.2													
		S		T															
	4.0	2.2	0.7	2.0	4.8														

FAB #54

1.5" Radius, 0.8" Border, Black on Orange;
[E 5TH ST] C;
Table of widths and spaces.

	E																		
3.7	2.0																		
		5		T		H													
	4.0	2.2	0.7	2.0	0.6	2.2													
		S		T															
	4.0	2.2	0.7	2.0	3.7														

FAB #49

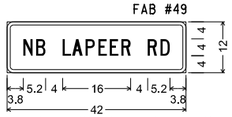

1.5" Radius, 0.8" Border, Black on Orange;
[NB LAPEER RD] C;
Table of widths and spaces.

	N		B																
3.8	2.2	0.8	2.2																
		L		A		P		E		E		R							
	4.0	2.0	0.2	2.5	0.7	2.2	0.8	2.0	0.7	2.0	0.7	2.2							
		R		D															
	4.0	2.2	0.8	2.2	3.8														

FAB #51

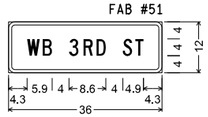

1.5" Radius, 0.8" Border, Black on Orange;
[WB 3RD ST] C;
Table of widths and spaces.

	W		B																
4.3	3.0	0.7	2.2																
		3		R		D													
	4.0	2.2	1.2	2.2	0.8	2.2													
		S		T															
	4.0	2.2	0.7	2.0	4.3														

FAB #53

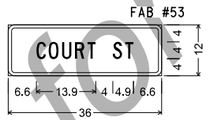

1.5" Radius, 0.8" Border, Black on Orange;
[COURT ST] C;
Table of widths and spaces.

	C		O		U		R		T										
6.6	2.2	0.7	2.3	0.8	2.2	0.9	2.1	0.7	2.0										
		S		T															
	4.0	2.2	0.7	2.0	6.6														

FAB #55

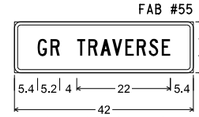

1.5" Radius, 0.8" Border, Black on Orange;
[GR TRAVERSE] C;
Table of widths and spaces.

	G		R																
5.4	2.2	0.8	2.2																
		T		R		A		V		E		R		S		E			
	4.0	2.0	0.7	2.2	0.7	2.5	0.2	2.4	0.7	2.0	0.7	2.2	0.7	2.1	0.9	2.0	5.4		

FAB #56

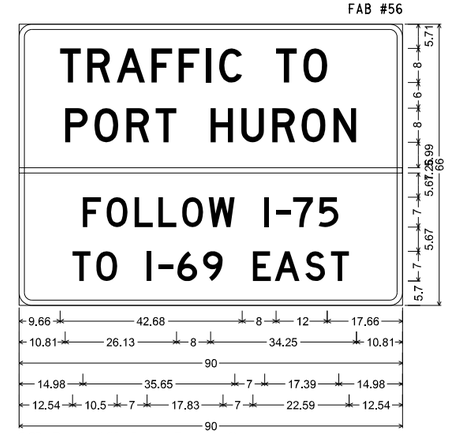

3.00" Radius, 1.25" Border, Black on Orange;
[TRAFFIC TO] D; [PORT HURON] D; [FOLLOW I-75] D;
[TO I-69 EAST] D;
Table of widths and spaces.

	T		R		A		F		F		I		C						
9.66	4.87	1.50	5.38	1.50	6.68	1.50	4.88	1.50	4.87	1.50	1.25	1.88	5.37						
	T		O																
	8.00	4.88	1.50	5.62	17.66														
10.81	P		O		R		T												
	5.38	1.50	5.62	1.88	5.37	1.50	4.88												
	H		U		R		O		N										
	8.00	5.37	1.88	5.37	1.88	5.37	1.50	5.63	1.87	5.38	10.81								
-0.00	90.00	0.00																	
	F		O		L		L		O		W								
14.98	4.26	1.31	4.93	1.64	4.26	1.32	4.26	1.31	4.93	1.31	6.12								
	I		-		7		5												
	7.00	1.10	1.64	3.50	0.44	4.70	1.31	4.70	14.98										
	T		O		I		-		6		9								
12.54	4.27	1.31	4.92	7.00	1.10	1.64	3.50	0.87	4.71	1.31	4.70								
		E		A		S		T											
	7.00	4.27	0.87	5.85	1.32	4.70	1.31	4.27	12.54										

DRAFT
Not for Bidding Purposes

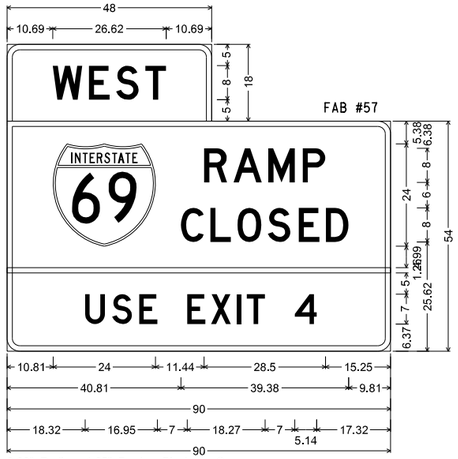

FAB #57

3.00" Radius, 1.25" Border, Black on Orange;
[WEST] D;
3.00" Radius, 1.25" Border, Black on Orange;
[RAMP] D; [CLOSED] D; [USE EXIT 4] D;
Table of widths and spaces.

10.69	W 7.00	1.50	E 4.87	1.50	S 5.38	1.50	T 4.87	10.69	
10.81	69 24.00	11.44	R 5.37	1.50	A 6.69	1.50	M 6.19	1.88	P 5.37	15.25
40.81	C 5.38	1.50	L 4.87	1.50	O 5.63	1.50	S 5.37	1.88	E 4.87	1.50	D 5.38	9.81
-0.00	90.00	0.00										
18.32	U 4.70	1.64	S 4.71	1.64	E 4.26							
7.00	E 4.27	1.31	X 4.71	1.31	I 1.09	1.31	T 4.27	7.00	4 5.14	17.32		

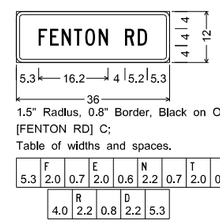

FAB #58

1.5" Radius, 0.8" Border, Black on Orange;
[FENTON RD] C;
Table of widths and spaces.

5.3	F 2.0	0.7	E 2.0	0.6	N 2.2	0.7	T 2.0	0.7	O 2.3	0.8	N 2.2
4.0	R 2.2	0.8	D 2.2	5.3							

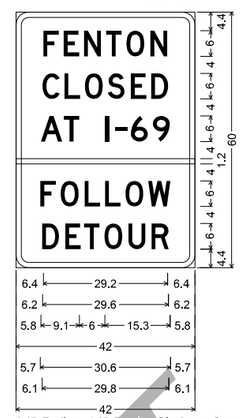

FAB #59

3.0" Radius, 1.3" Border, Black on Orange;
[FENTON] D; [CLOSED] D;
[AT I-69] D; [FOLLOW] D;
[DETOUR] D;
Table of widths and spaces.

6.4	F 3.7	1.1	E 3.7	1.1	N 4.0	1.1	T 3.7	1.1	O 4.2	1.4	N 4.1	6.4	
6.2	C 4.1	1.1	L 3.6	1.2	O 4.2	1.1	S 4.0	1.5	E 3.6	1.1	D 4.1	6.2	
5.8	A 5.1	0.3	T 3.7										
6.0	I 0.9	1.4	- 3.0	0.8	6 4.0	1.1	9 4.1	5.8					
-0.0	42.0	0.0											
5.7	F 3.7	1.1	O 4.2	1.4	L 3.7	1.1	L 3.7	1.1	O 4.2	1.1	W 5.3	5.7	
6.1	D 4.1	1.4	E 3.6	0.8	T 3.6	1.2	O 4.2	1.4	U 4.0	1.4	R 4.1	6.1	

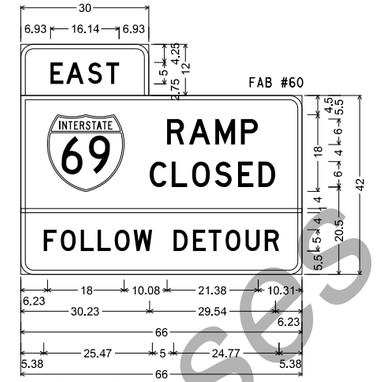

FAB #60

3.00" Radius, 1.00" Border, Black on Orange;
[EAST] D;
3.00" Radius, 1.00" Border, Black on Orange;
Interstate 69 9.00" C; [RAMP] D; [CLOSED] D;
[FOLLOW DETOUR] D;
Table of widths and spaces.

6.93	E 3.05	0.63	A 4.18	0.93	S 3.36	0.94	T 3.05	6.93							
6.23	69 18.00														
10.08	R 4.03	1.13	A 5.01	1.13	M 4.64	1.41	P 4.03	10.31							
30.23	C 4.04	1.12	L 3.66	1.12	O 4.22	1.13	S 4.03	1.40	E 3.66	1.12	D 4.04	6.23			
-0.00	66.00	0.00													
5.38	F 3.05	0.94	O 3.51	1.17	L 3.05	0.94	L 3.05	0.93	O 3.52	0.94	W 4.37				
5.00	D 3.36	1.17	E 3.05	0.62	T 3.05	0.94	O 3.51	1.18	U 3.36	1.17	R 3.36	5.38			

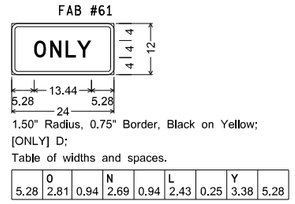

FAB #61

1.50" Radius, 0.75" Border, Black on Yellow;
[ONLY] D;
Table of widths and spaces.

5.28	O 2.81	0.94	N 2.69	0.94	L 2.43	0.25	Y 3.38	5.28

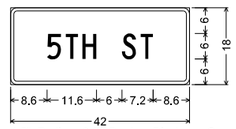

FAB #62

1.5" Radius, 0.8" Border, Black on Orange;
[5TH ST] C;
Table of widths and spaces.

8.6	5 3.2	1.1	T 3.0	1.0	H 3.3			
6.0	S 3.2	1.0	T 3.0	8.6				

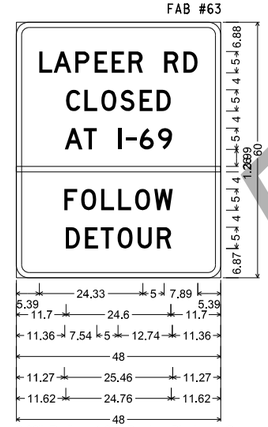

FAB #63

3.00" Radius, 1.25" Border, Black on Orange;
[LAPEER RD] D; [CLOSED] D;
[AT I-69] D; [FOLLOW] D;
[DETOUR] D;
Table of widths and spaces.

5.39	L 3.04	0.32	A 4.18	0.93	P 3.36	1.17	E 3.05	0.94	E 3.05	0.93	R 3.36		
5.00	R 3.36	1.17	D 3.36	5.39									
11.70	C 3.35	0.94	L 3.05	0.94	O 3.51	0.94	S 3.36	1.17	E 3.05	0.94	D 3.35	11.70	
11.36	A 4.18	0.32	T 3.04										
5.00	I 0.78	1.18	- 2.50	0.62	6 3.36	0.94	9 3.36	11.36					
-0.00	48.00	0.00											
11.27	F 3.04	0.94	O 3.52	1.17	L 3.04	0.94	L 3.05	0.94	O 3.51	0.94	W 4.37	11.27	
11.62	D 3.36	1.17	E 3.05	0.62	T 3.05	0.93	O 3.52	1.17	U 3.36	1.17	R 3.36	11.62	

DRAFT
Not for Bidding Purposes

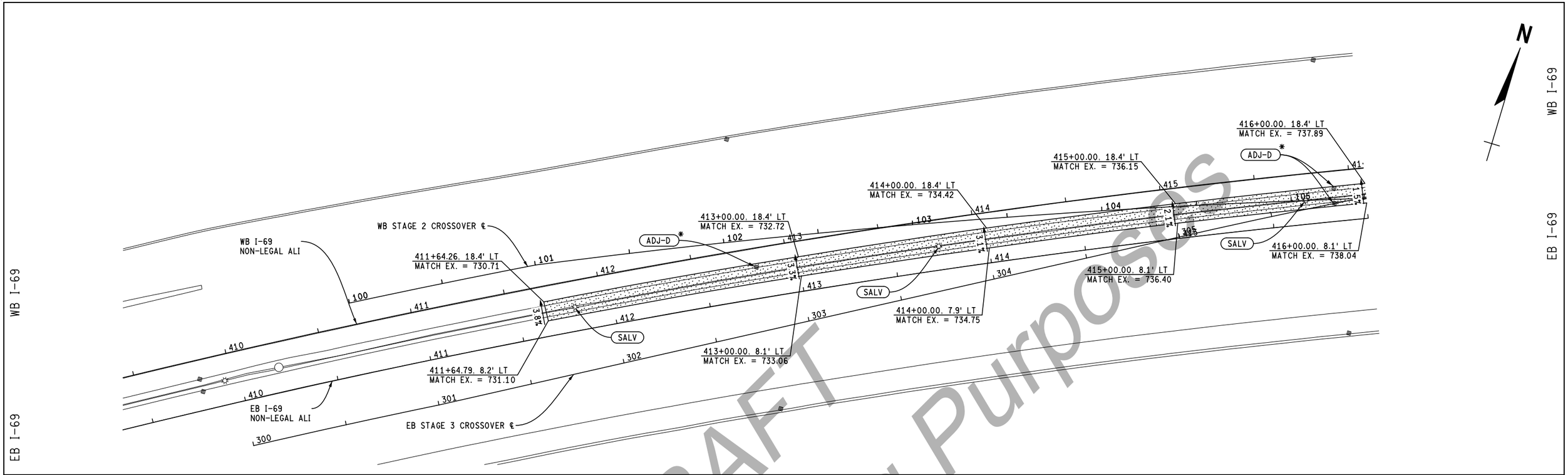

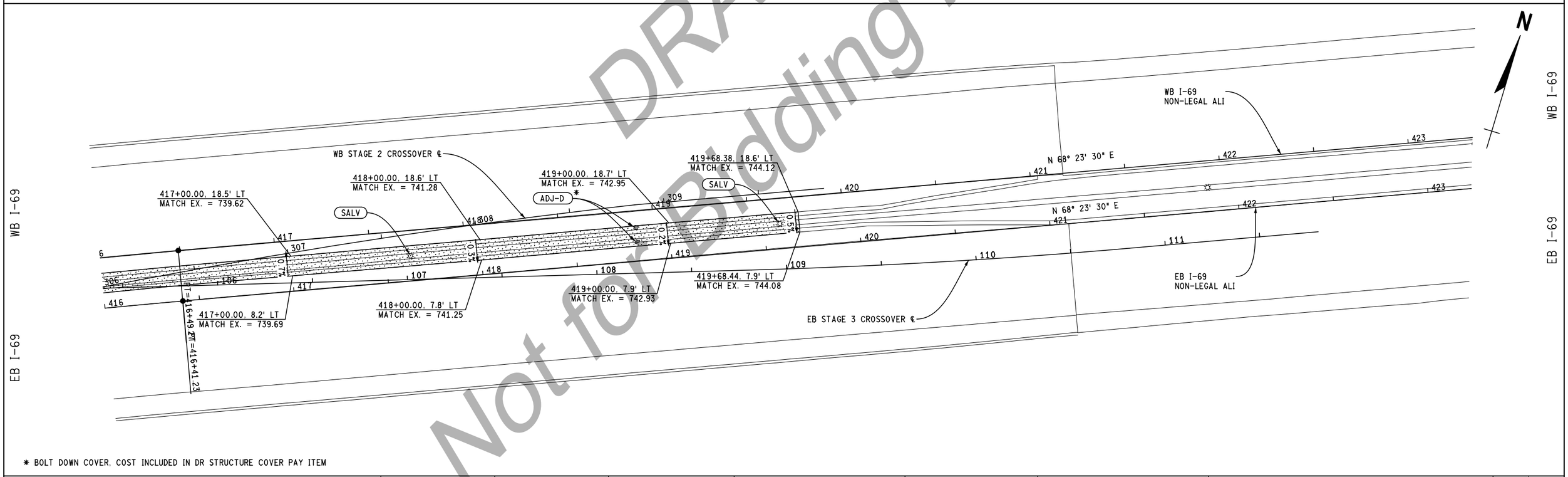

DRAFT
Not for Bidding Purposes

✱ BOLT DOWN COVER, COST INCLUDED IN DR STRUCTURE COVER PAY ITEM

FINAL ROW PLAN REVISIONS (SUBMITTAL DATE:)							
NO.	DATE	AUTH	DESCRIPTION	NO.	DATE	AUTH	DESCRIPTION

AECOM

MDOT Michigan Department of Transportation

0 HORZ. (FT) 50

FILE: 110535_I69_MOT_GRADING01.dgn

DATE: 07/27/20
DESIGN UNIT:
TSC: DAVISON

CS: 25084, 25085
JN: 132026A

MAINTAINING TRAFFIC SHEET
CROSSOVER GRADING SHEET
PRE-STAGE

DRAWING 001

SHEET SECT 166

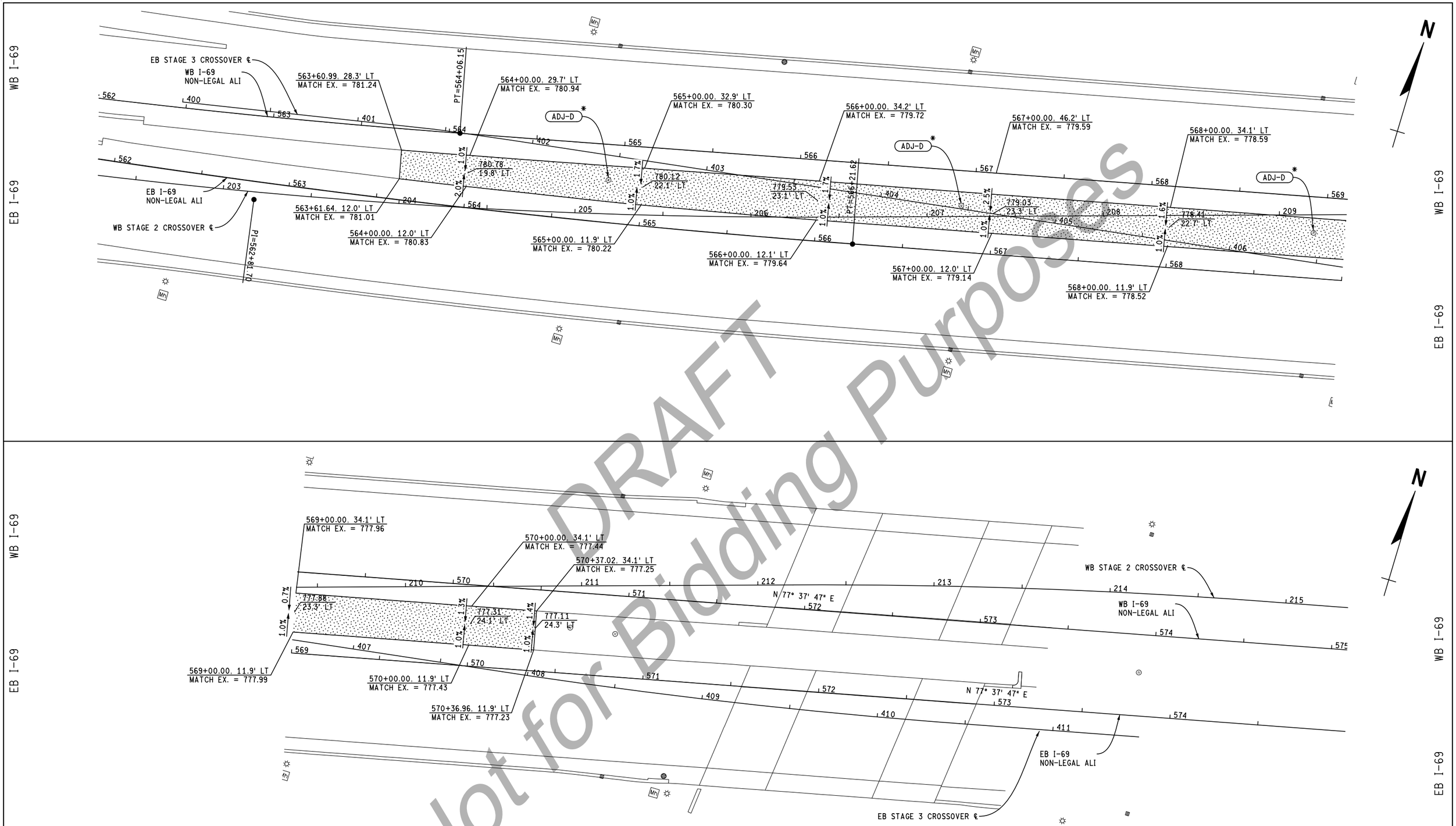

DRAFT
Not for Bidding Purposes

✱ BOLT DOWN COVER, COST INCLUDED IN DR STRUCTURE COVER PAY ITEM

FINAL ROW PLAN REVISIONS (SUBMITTAL DATE:)							
NO.	DATE	AUTH	DESCRIPTION	NO.	DATE	AUTH	DESCRIPTION

AECOM

MDOT Michigan Department of Transportation

0 HORZ. (FT) 50

FILE: 110535_I69_MOT_GRADING02.dgn

DATE: 07/27/20
DESIGN UNIT:
TSC: DAVISON

CS: 25084, 25085
JN: 132026A

MAINTAINING TRAFFIC SHEET
CROSSOVER GRADING SHEET
PRE-STAGE

DRAWING 002

SHEET SECT 167

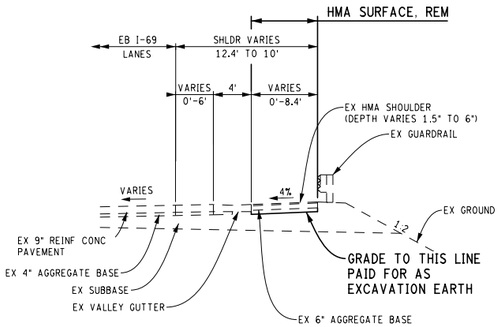

EXISTING TEMPORARY SHOULDER
WITH GUARDRAIL SECTION

TO APPLY:
EB I-69 STA 431+30.00 TO STA 437+70.82
EB I-69 STA 489+70.80 TO STA 492+40.73
EB I-69 STA 501+76.68 TO STA 521+87.59

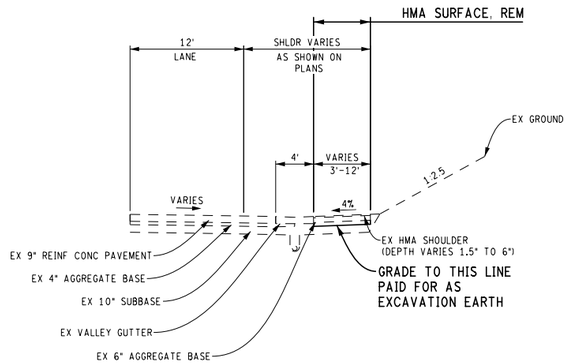

EXISTING TEMPORARY SHOULDER SECTION

TO APPLY:
EB I-69 STA 440+69.50 TO STA 455+07.50
EB I-69 STA 466+31.09 TO STA 471+64.40
EB I-69 STA 480+02.94 TO STA 489+70.80
EB I-69 STA 492+40.73 TO STA 494+16.17
EB I-69 STA 529+84.34 TO STA 538+84.52

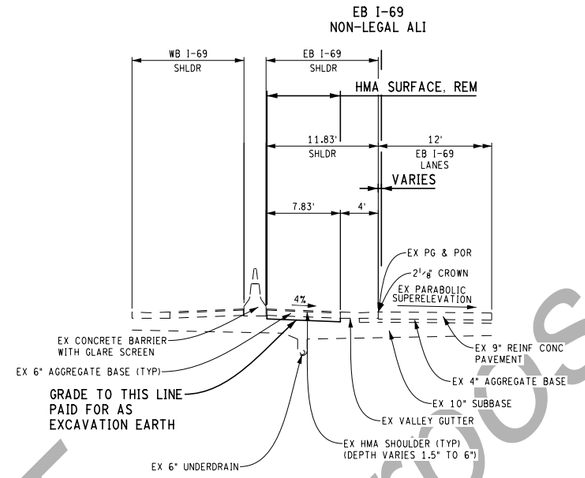

EXISTING TEMPORARY EB MEDIAN SECTION

TO APPLY:
EB I-69 STA 460+80.20 TO STA 473+22.30
EB I-69 STA 475+11.56 TO STA 496+91.73

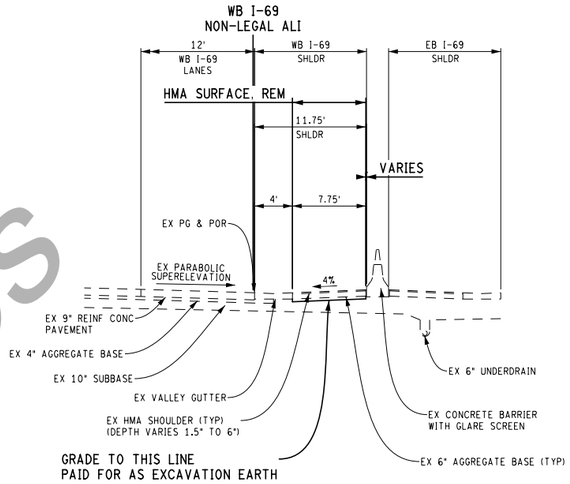

EXISTING TEMPORARY WB MEDIAN SECTION

TO APPLY:
WB I-69 STA 498+22.54 TO STA 523+81.04
WB I-69 STA 527+43.67 TO STA 540+16.17

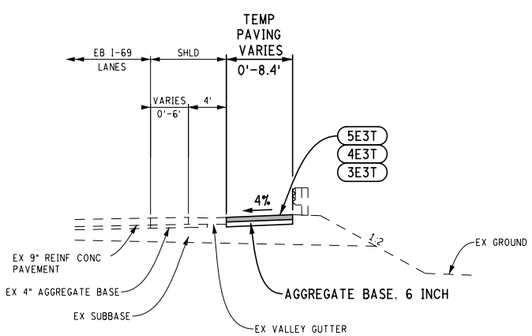

PROPOSED TEMPORARY PAVING
SHOULDER WITH GUARDRAIL SECTION

TO APPLY:
EB I-69 STA 431+30.00 TO STA 437+70.82
EB I-69 STA 489+70.80 TO STA 492+40.73
EB I-69 STA 501+76.68 TO STA 521+87.59

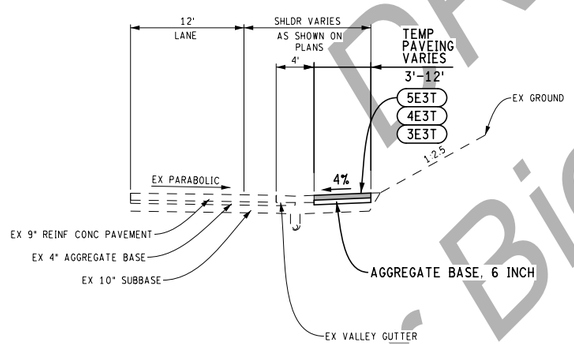

PROPOSED TEMPORARY SHOULDER SECTION

TO APPLY:
EB I-69 STA 440+69.50 TO STA 455+07.50
EB I-69 STA 466+31.09 TO STA 471+64.40
EB I-69 STA 480+02.94 TO STA 489+70.80
EB I-69 STA 492+40.73 TO STA 494+16.17
EB I-69 STA 529+84.34 TO STA 538+84.52

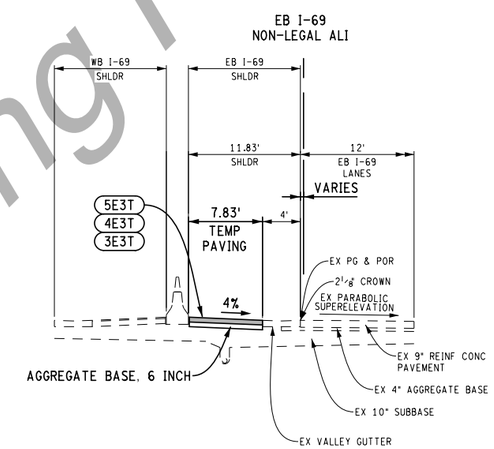

PROPOSED TEMPORARY EB MEDIAN SECTION

TO APPLY:
EB I-69 STA 460+80.20 TO STA 473+22.30
EB I-69 STA 475+11.56 TO STA 496+91.73

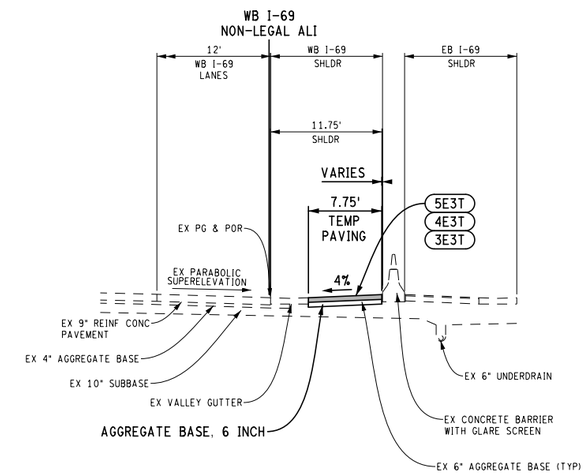

PROPOSED TEMPORARY WB MEDIAN SECTION

TO APPLY:
WB I-69 STA 498+22.54 TO STA 523+81.04
WB I-69 STA 527+43.67 TO STA 540+16.17

MOT CROSSOVER HMA APPLICATION ESTIMATE

IDENT NO.	ITEM	RATE LBS PER SYD	PERFORMANCE GRADE	REMARKS
5E3T	HMA TEMPORARY TOP COURSE	165	58-28	TOP COURSE (AWI=260)
4E3T	HMA TEMPORARY LEVELING COURSE	220	58-28	LEVELING COURSE
3E3T	HMA TEMPORARY BASE COURSE	330	58-22	BASE COURSE
5E3-1	AGGREGATE BASE	6 INCH		
3E3-1	SAND SUBBASE	12 INCH		

*FOR INFORMATION ONLY

DRAFT
Not for Bidding Purposes

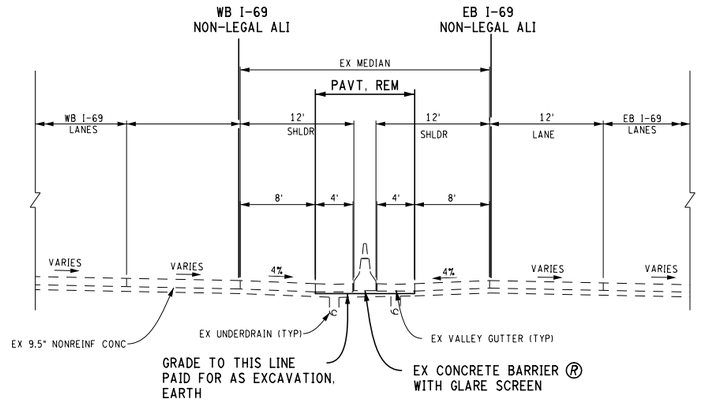

EXISTING CROSSOVER SECTION
TO APPLY:
WB I-69 STA 411+64.26 TO STA 419+68.38

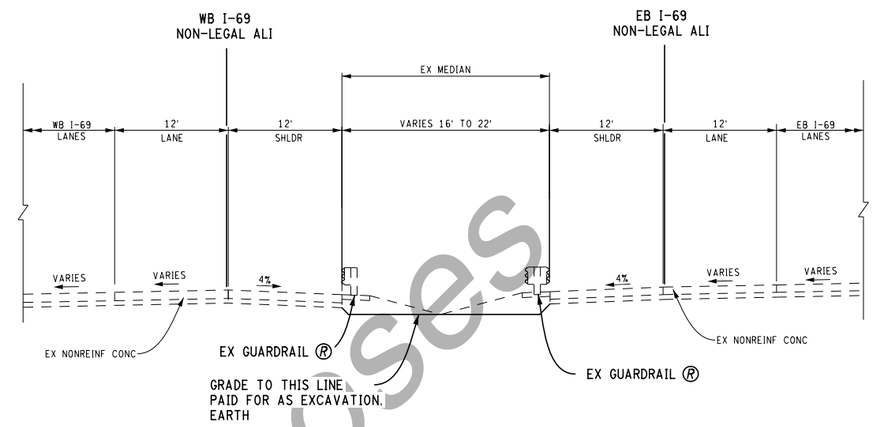

EXISTING CROSSOVER SECTION
TO APPLY:
WB I-69 STA 563+60.99 TO STA 570+37.02

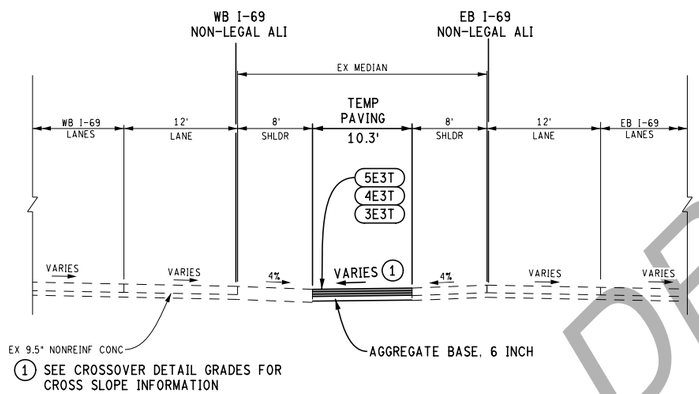

TEMPORARY CROSSOVER SECTION
TO APPLY:
WB I-69 STA 411+64.26 TO STA 419+68.38

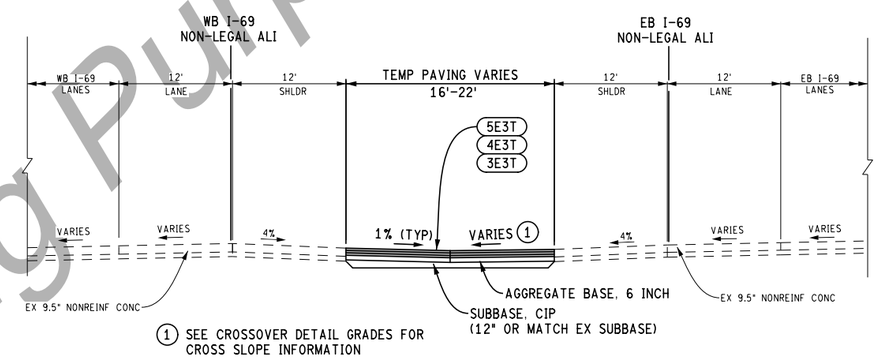

TEMPORARY CROSSOVER SECTION
TO APPLY:
WB I-69 STA 563+60.99 TO STA 570+37.02

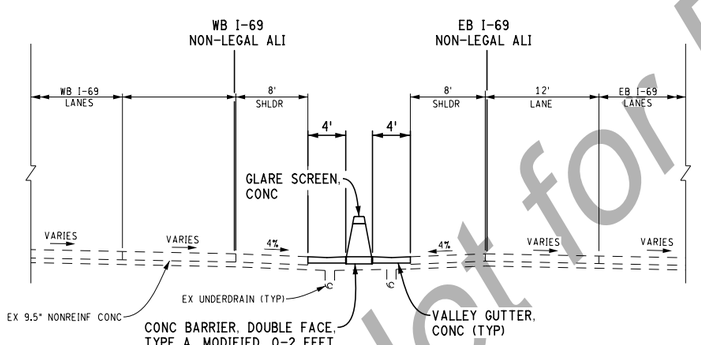

PROPOSED CROSSOVER SECTION
TO APPLY:
WB I-69 STA 411+64.26 TO STA 419+68.38

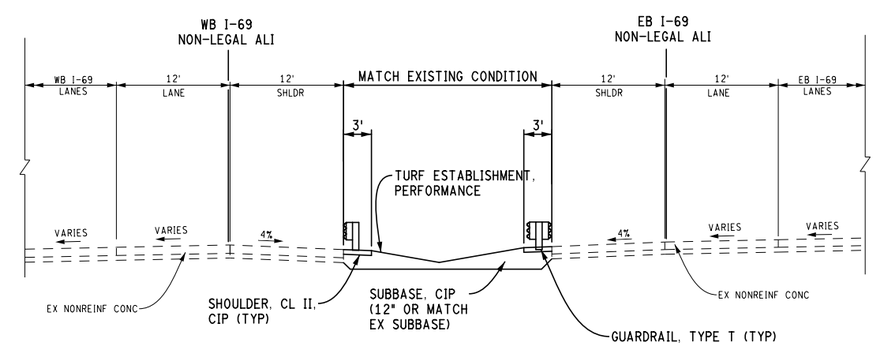

PROPOSED CROSSOVER SECTION
TO APPLY:
WB I-69 STA 563+60.99 TO STA 570+37.02

DRAFT
Not for Bidding Purposes

FINAL ROW PLAN REVISIONS (SUBMITTAL DATE:)							
NO.	DATE	AUTH	DESCRIPTION	NO.	DATE	AUTH	DESCRIPTION

AECOM | MDOT Michigan Department of Transportation | VERT. (FT) 0 16 | HORZ. (FT) 0 16

FILE: 1105353_I69_MOT_TEMP_TYP02.dgn

DATE: 07/27/20
DESIGN UNIT:
TSC: DAVISON

CS: 25084, 25085
JN: 132026A

MAINTAINING TRAFFIC SHEET
TEMP PAVING TYPICAL
PRE-STAGE

DRAWING 002
SHEET
SECT 169

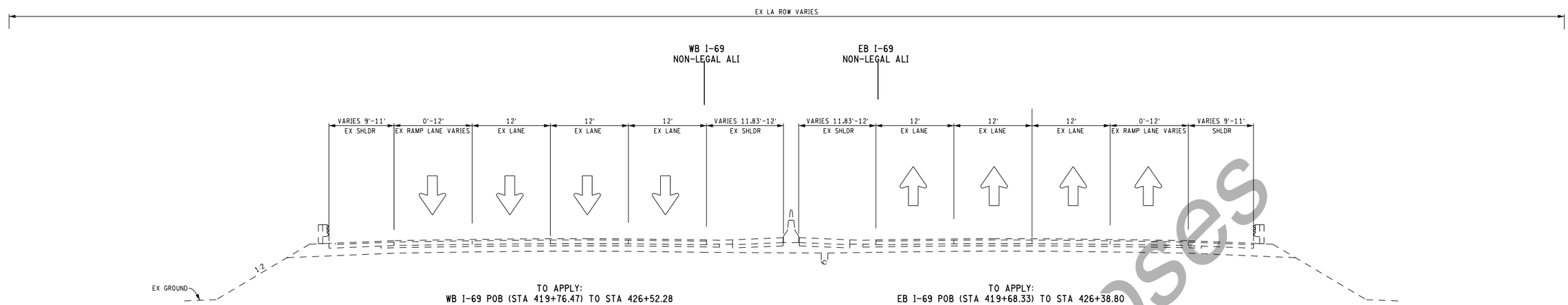

EXISTING

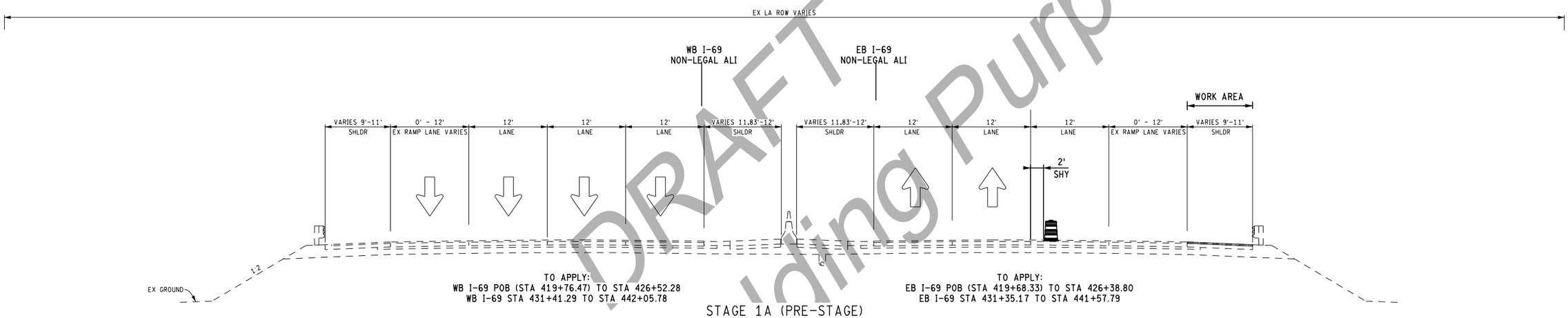

STAGE 1A (PRE-STAGE)

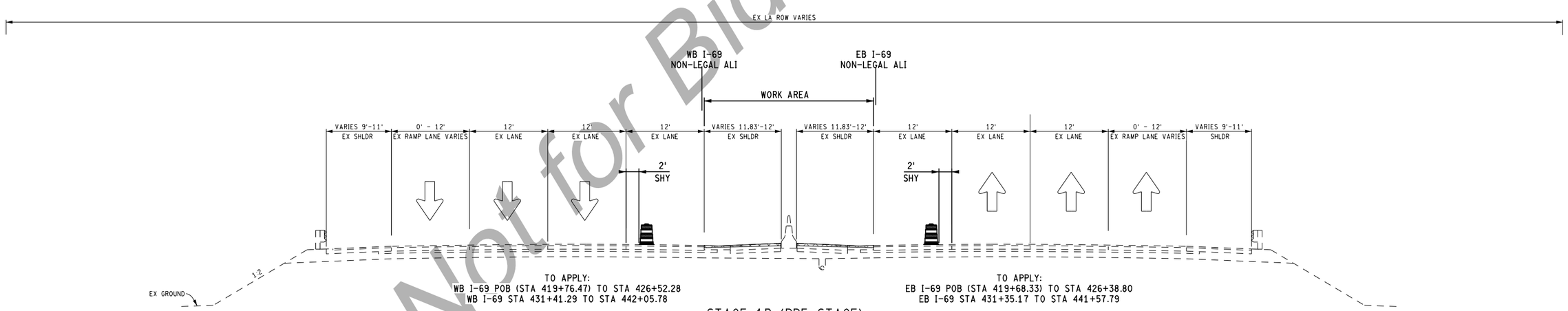

STAGE 1B (PRE-STAGE)

DRAFT
Not for Bidding Purposes

FINAL ROW PLAN REVISIONS (SUBMITTAL DATE:)							
NO.	DATE	AUTH	DESCRIPTION	NO.	DATE	AUTH	DESCRIPTION

AECOM

MDOT Michigan Department of Transportation

0 HORZ. (FT)

FILE: 110535_I69_MTTYP_001.dgn

DATE: 07/27/20
DESIGN UNIT: BLOCK
TSC: DAVISON

CS: 25084, 25085
JN: 132026

MAINTAINING TRAFFIC STAGE TYPICAL CROSS SEC
I-69 TYPICALS
EXISTING & PRE-STAGES

DRAWING: I-69 MTTYP 1

SHEET SECT: 170

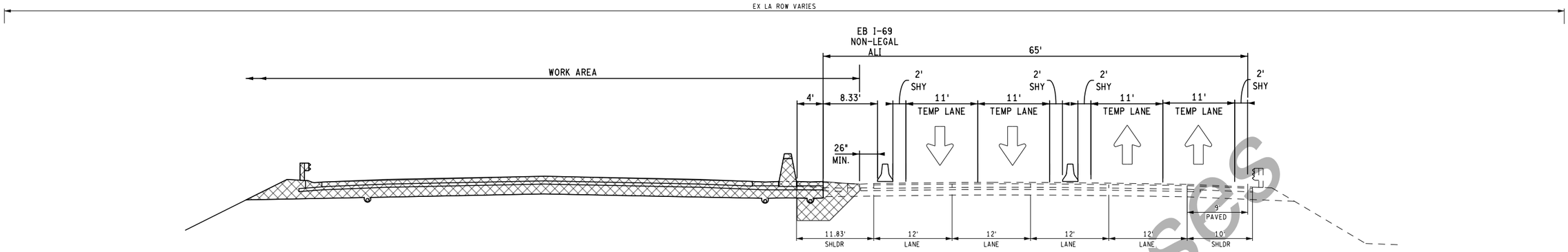

TO APPLY:
WB I-69 POB (STA 419+76.47) TO STA 426+52.28
WB I-69 STA 431+41.29 TO STA 442+05.78

STAGES 2A & 2B

TO APPLY:
EB I-69 POB (STA 419+68.33) TO STA 426+38.80
EB I-69 STA 431+35.17 TO STA 441+57.79

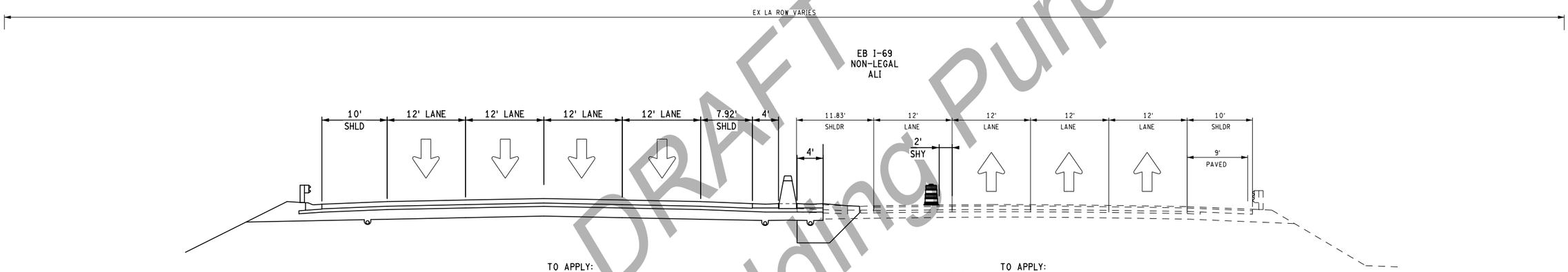

TO APPLY:
WB I-69 POB (STA 419+76.47) TO STA 426+52.28
WB I-69 STA 431+41.29 TO STA 442+05.78

STAGE 2C

TO APPLY:
EB I-69 POB (STA 419+68.33) TO STA 426+38.80
EB I-69 STA 431+35.17 TO STA 441+57.79

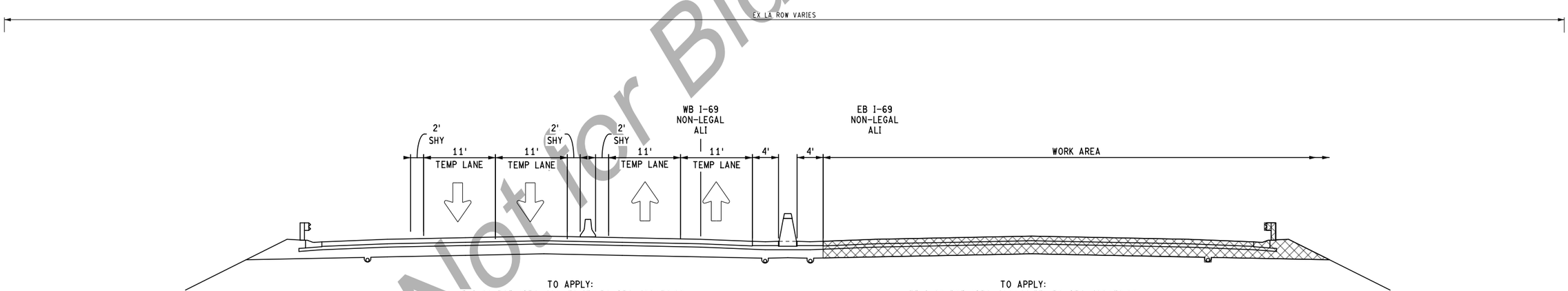

TO APPLY:
WB I-69 POB (STA 419+76.47) TO STA 426+52.28
WB I-69 STA 431+41.29 TO STA 442+05.78

STAGES 3A & 3B

TO APPLY:
EB I-69 POB (STA 419+68.33) TO STA 426+38.80
EB I-69 STA 431+35.17 TO STA 441+57.79

DRAFT
Not for Bidding Purposes

FINAL ROW PLAN REVISIONS (SUBMITTAL DATE:)							
NO.	DATE	AUTH	DESCRIPTION	NO.	DATE	AUTH	DESCRIPTION

AECOM

MDOT Michigan Department of Transportation

0 HORZ. (FT)

FILE: 110535_I69_MTTYP_001.dgn

DATE: 07/27/20
DESIGN UNIT: BLOCK
TSC: DAVISON

CS: 25084, 25085
JN: 132026

MAINTAINING TRAFFIC STAGE TYPICAL CROSS SEC
I-69 TYPICALS
STAGES 2 & 3

DRAWING: I-70 MTTYP 2

SHEET SECT 171

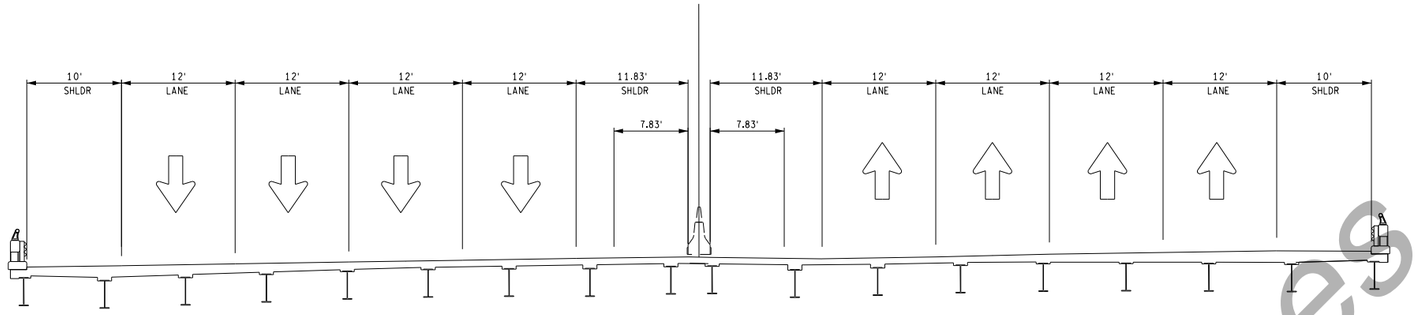

TO APPLY:
WB I-69 R01 OF 25085

TO APPLY:
EB I-69 R01 OF 25085

EXISTING

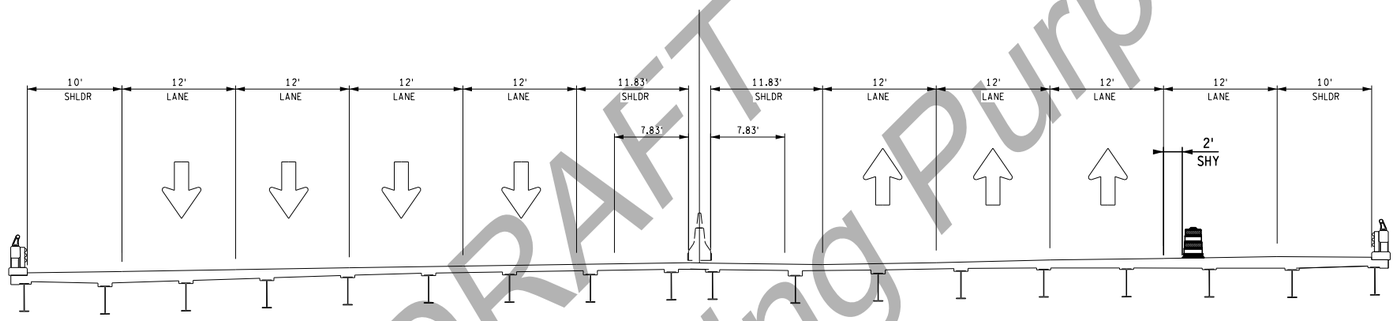

TO APPLY:
WB I-69 R01 OF 25085

TO APPLY:
EB I-69 R01 OF 25085

STAGE 1A (PRE-STAGE)

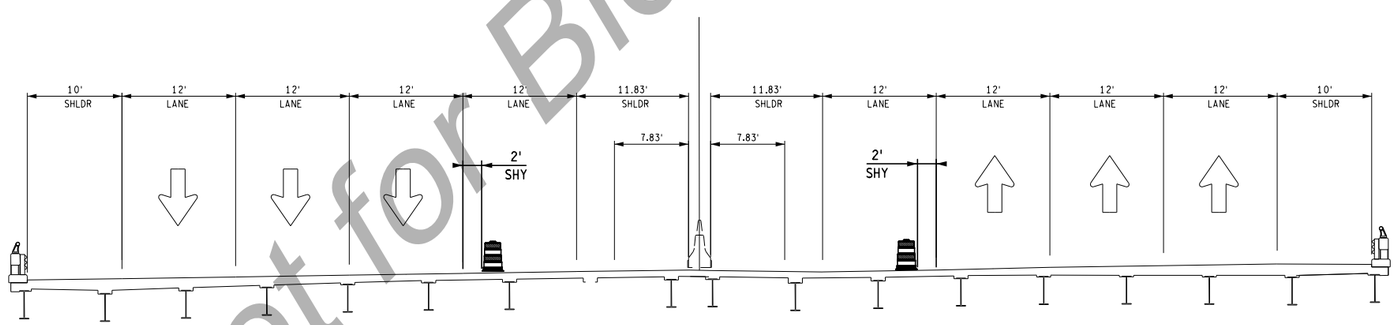

TO APPLY:
WB I-69 R01 OF 25085

TO APPLY:
EB I-69 R01 OF 25085

STAGE 1B (PRE-STAGE)

DRAFT
Not for Bidding Purposes

FINAL ROW PLAN REVISIONS (SUBMITTAL DATE:)							
NO.	DATE	AUTH	DESCRIPTION	NO.	DATE	AUTH	DESCRIPTION

AECOM

MDOT Michigan Department of Transportation

0 HORZ. (FT)

FILE: 110535_I69_MTTYP_001.dgn

DATE: 07/27/20
DESIGN UNIT: BLOCK
TSC: DAVISON

CS: 25084, 25085
JN: 132026

MAINTAINING TRAFFIC STAGE TYPICAL CROSS SEC
I-69 TYPICALS AT R01 OF 25085
EXISTING & PRE-STAGES

DRAWING: I-69 MTTYP 3

SHEET SECT 172

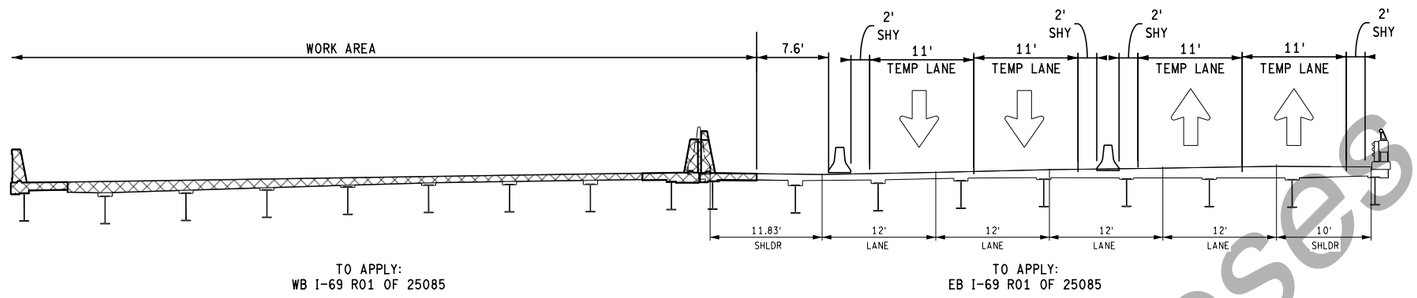

STAGES 2A & 2B

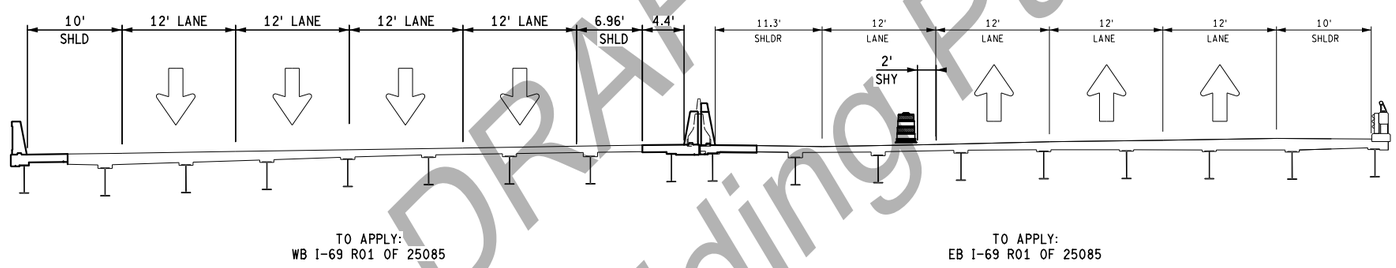

STAGE 2C

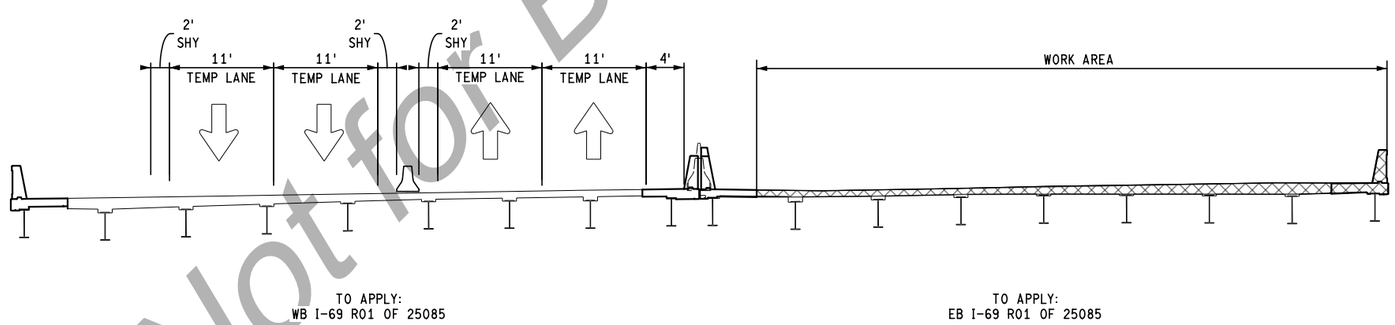

STAGE 3A & 3B

DRAFT
Not for Bidding Purposes

FINAL ROW PLAN REVISIONS (SUBMITTAL DATE:)							
NO.	DATE	AUTH	DESCRIPTION	NO.	DATE	AUTH	DESCRIPTION

AECOM

MDOT Michigan Department of Transportation

0 HORZ. (FT)

FILE: 110535_I69_MTTYP_001.dgn

DATE: 07/27/20
DESIGN UNIT: BLOCK
TSC: DAVISON

CS: 25084, 25085
JN: 132026

MAINTAINING TRAFFIC STAGE TYPICAL CROSS SEC
I-69 TYPICALS AT R01 OF 25085
STAGES 2 & 3

DRAWING: I-69 MTTYP 4
SHEET SECT 173

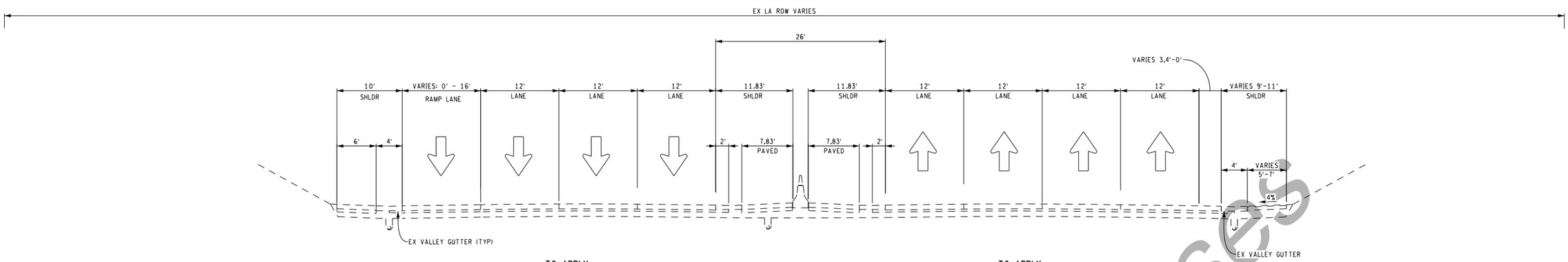

EXISTING

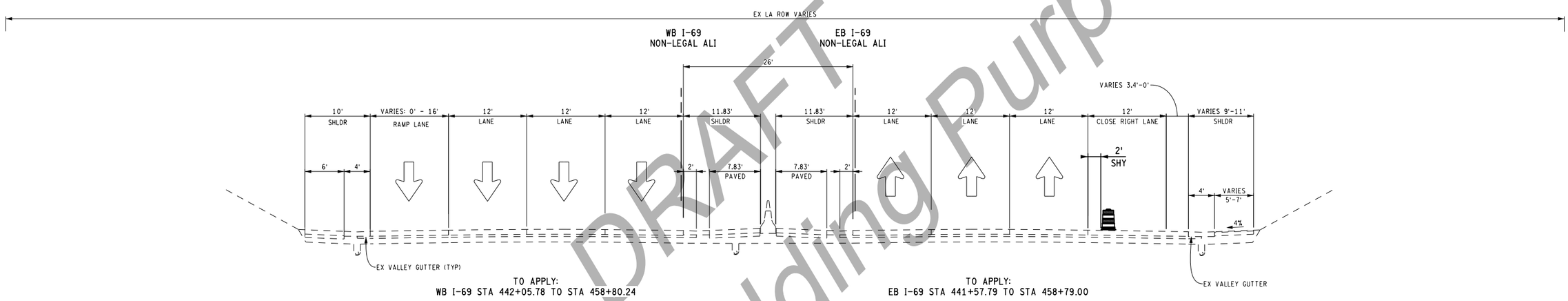

STAGE 1A (PRE-STAGE)

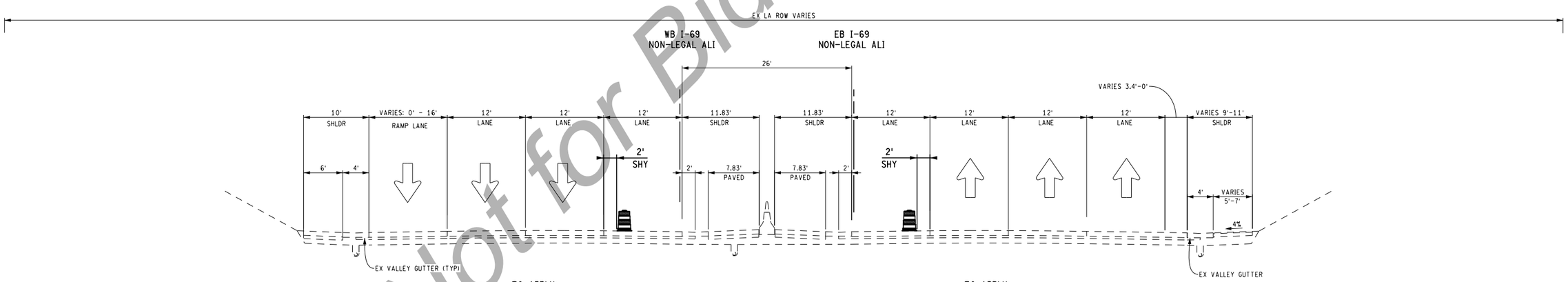

STAGE 1B (PRE-STAGE)

DRAFT
Not for Bidding Purposes

FINAL ROW PLAN REVISIONS (SUBMITTAL DATE:)							
NO.	DATE	AUTH	DESCRIPTION	NO.	DATE	AUTH	DESCRIPTION

AECOM

MDOT Michigan Department of Transportation

0 HORZ. (FT)

FILE: 110535_I69_MTTYP_001.dgn

DATE: 07/27/20
DESIGN UNIT: BLOCK
TSC: DAVISON

CS: 25084, 25085
JN: 132026

MAINTAINING TRAFFIC STAGE TYPICAL CROSS SEC
I-69 TYPICALS
EXISTING & PRE-STAGES

DRAWING: I-69 MTTYP 5
SHEET SECT: 174

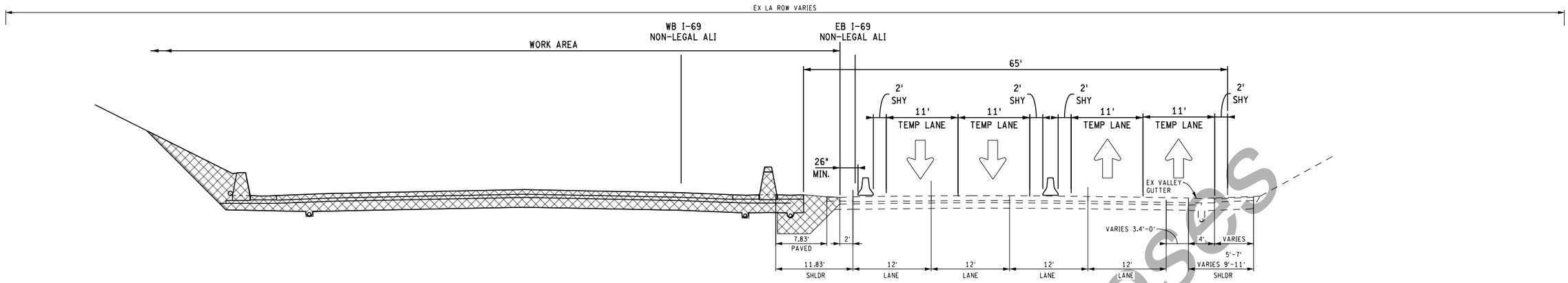

TO APPLY:
WB I-69 STA 442+05.78 TO STA 458+80.24

STAGES 2A & 2B

TO APPLY:
EB I-69 STA 441+57.79 TO STA 458+79.00

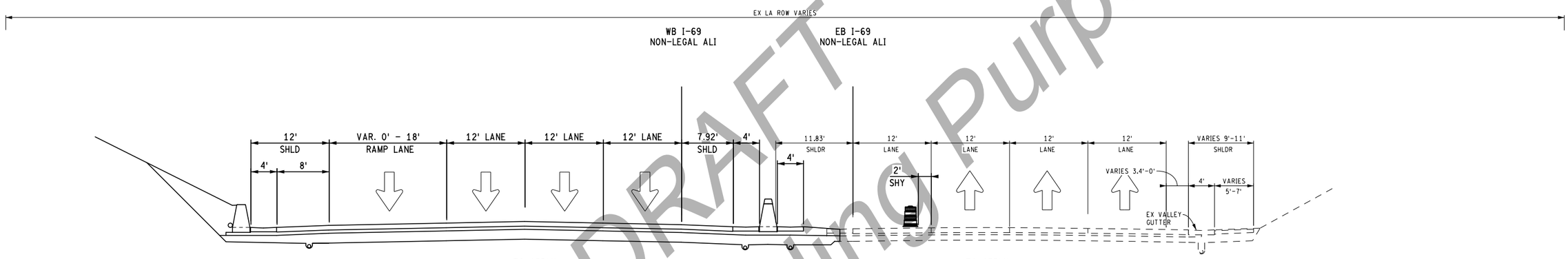

TO APPLY:
WB I-69 STA 442+05.78 TO STA 458+80.24

TO APPLY:
EB I-69 STA 441+57.79 TO STA 458+79.00

STAGE 2C

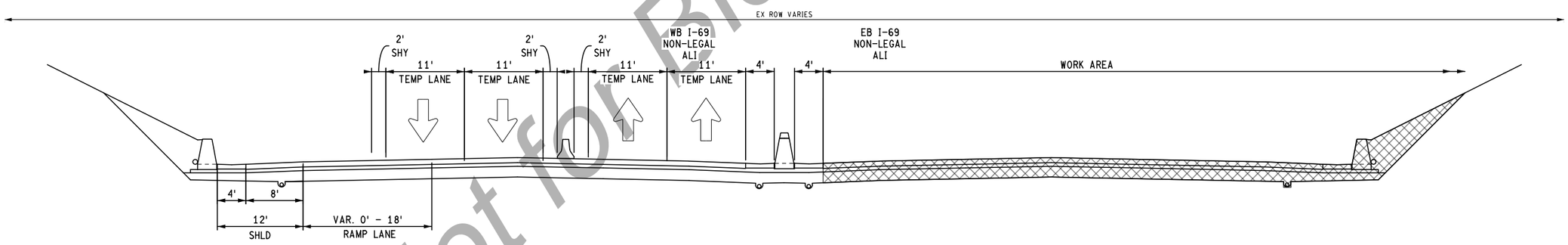

TO APPLY:
WB I-69 STA 442+05.78 TO STA 458+80.24

TO APPLY:
EB I-69 STA 441+57.79 TO STA 458+79.00

STAGE 3A & 3B

DRAFT
Not for Bidding Purposes

FINAL ROW PLAN REVISIONS (SUBMITTAL DATE:)							
NO.	DATE	AUTH	DESCRIPTION	NO.	DATE	AUTH	DESCRIPTION

AECOM

MDOT Michigan Department of Transportation

0 HORZ. (FT)

FILE: 110535_I69_MTTYP_001.dgn

DATE: 07/27/20
DESIGN UNIT: BLOCK
TSC: DAVISON

CS: 25084, 25085
JN: 132026

MAINTAINING TRAFFIC STAGE TYPICAL CROSS SEC
I-69 TYPICALS
STAGES 2 & 3

DRAWING: I-69 MTTYP 6
SHEET SECT: 175

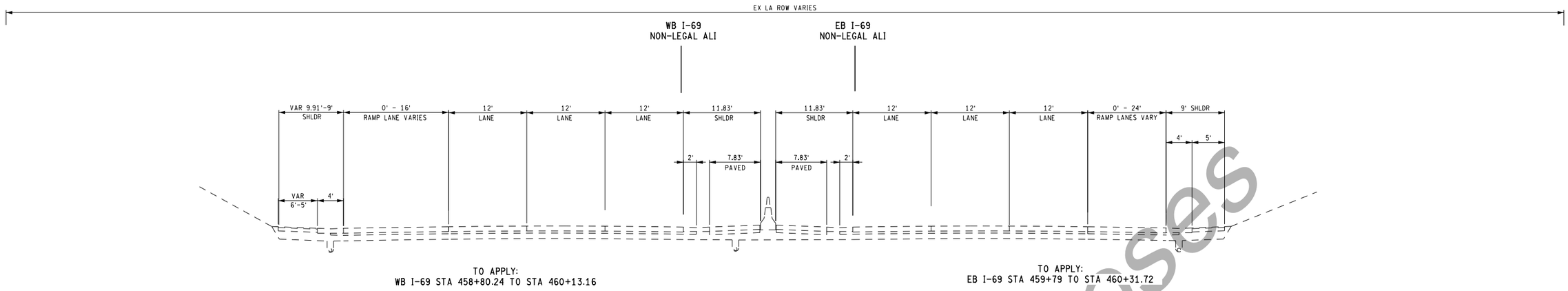

EXISTING

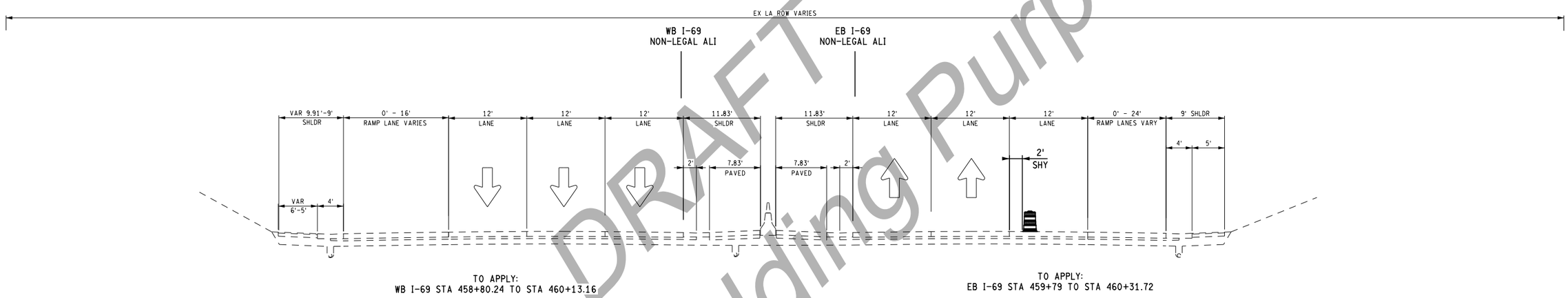

STAGE 1A (PRE-STAGE)

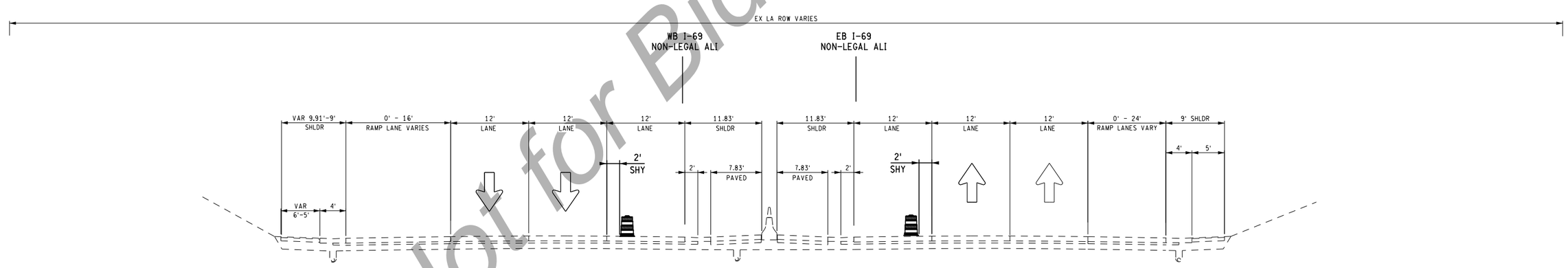

STAGE 1B (PRE-STAGE)

DRAFT
Not for Bidding Purposes

FINAL ROW PLAN REVISIONS (SUBMITTAL DATE:)							
NO.	DATE	AUTH	DESCRIPTION	NO.	DATE	AUTH	DESCRIPTION

AECOM

MDOT Michigan Department of Transportation

0 HORZ. (FT)

FILE: 110535_I69_MTTYP_001.dgn

DATE: 07/27/20
DESIGN UNIT: BLOCK
TSC: DAVISON

CS: 25084, 25085
JN: 132026

MAINTAINING TRAFFIC STAGE TYPICAL CROSS SEC
I-69 TYPICALS
EXISTING & PRE-STAGES

DRAWING: I-69 MTTYP 7
SHEET SECT 176

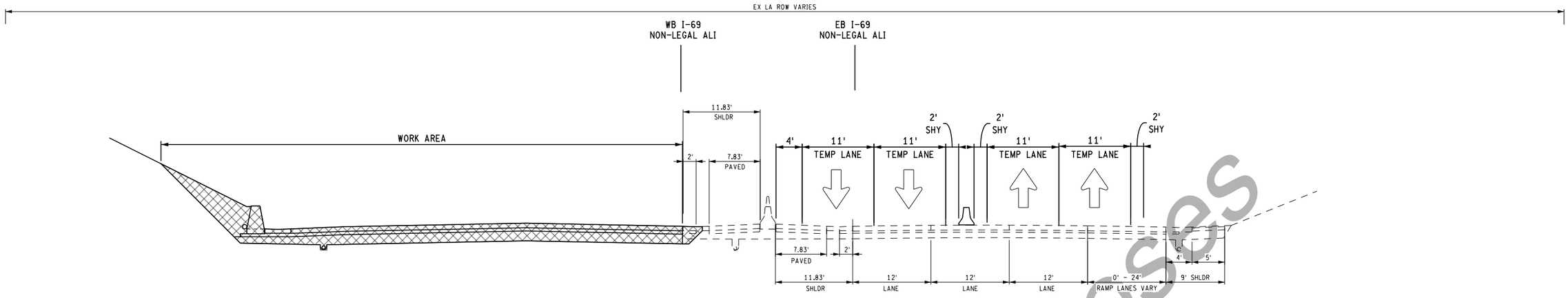

STAGES 2A & 2B

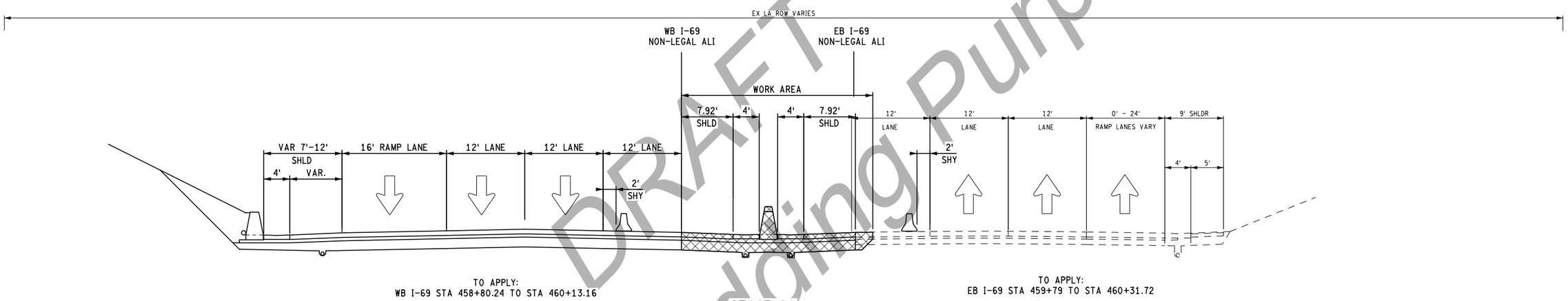

STAGE 2C

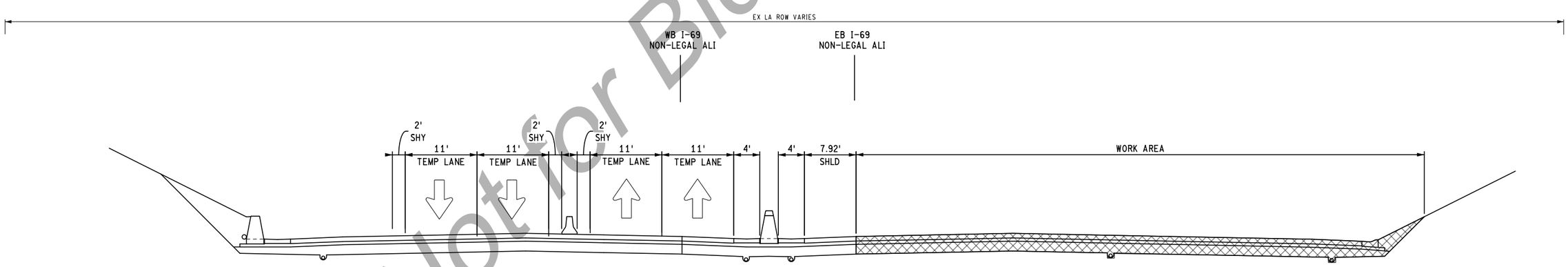

STAGE 3A & 3B

DRAFT
Not for Bidding Purposes

FINAL ROW PLAN REVISIONS (SUBMITTAL DATE:)							
NO.	DATE	AUTH	DESCRIPTION	NO.	DATE	AUTH	DESCRIPTION

AECOM

MDOT Michigan Department of Transportation

0 HORZ. (FT)

FILE: 110535_I69_MTTYP_001.dgn

DATE: 07/27/20
DESIGN UNIT: BLOCK
TSC: DAVISON

CS: 25084, 25085
JN: 132026

MAINTAINING TRAFFIC STAGE TYPICAL CROSS SEC
I-69 TYPICALS
STAGES 2 & 3

DRAWING: I-69 MTTYP 8

SHEET SECT 177

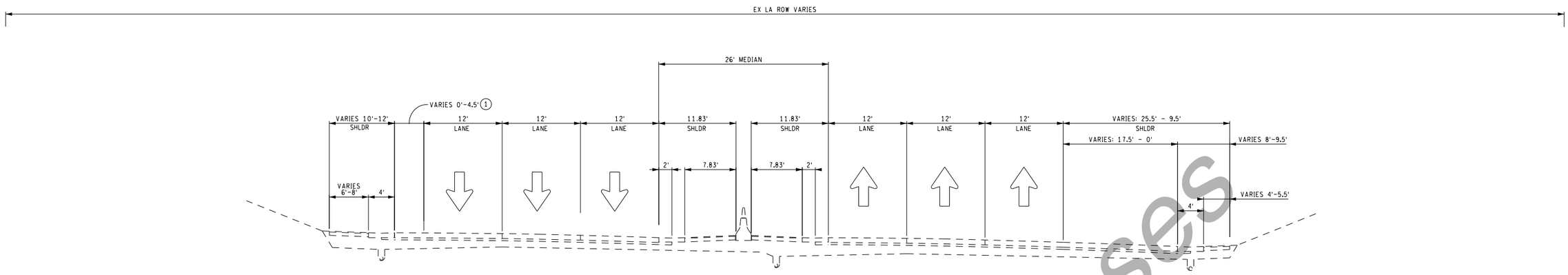

TO APPLY:
WB I-69 STA 460+13.16 TO STA 472+78.42

TO APPLY:
EB I-69 STA 460.31.72 TO STA 470+24.38

EXISTING

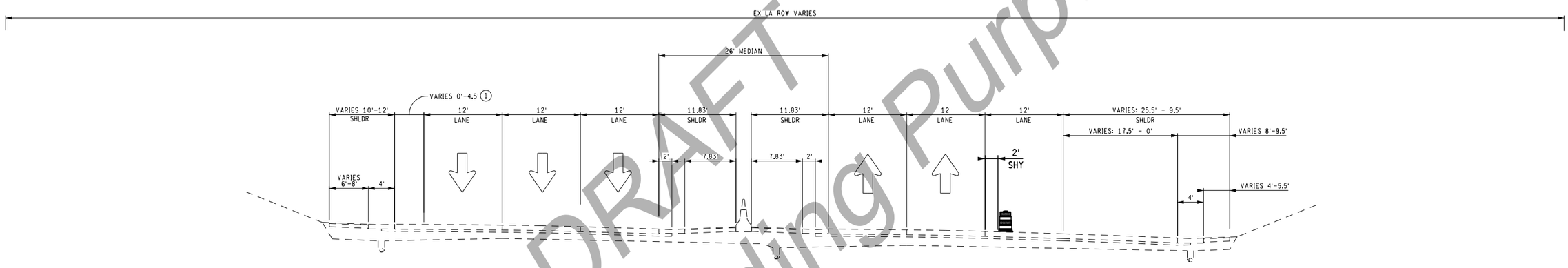

TO APPLY:
WB I-69 STA 460+13.16 TO STA 472+78.42

TO APPLY:
EB I-69 STA 460.31.72 TO STA 470+24.38

STAGE 1A (PRE-STAGE)

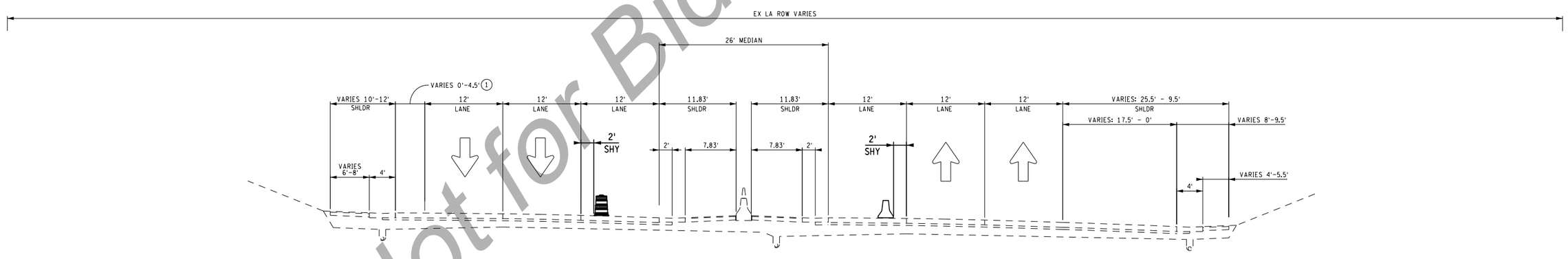

TO APPLY:
WB I-69 STA 460+13.16 TO STA 472+78.42

TO APPLY:
EB I-69 STA 460.31.72 TO STA 470+24.38

STAGE 1B (PRE-STAGE)

DRAFT
Not for Bidding Purposes

FINAL ROW PLAN REVISIONS (SUBMITTAL DATE:)							
NO.	DATE	AUTH	DESCRIPTION	NO.	DATE	AUTH	DESCRIPTION

AECOM

MDOT Michigan Department of Transportation

0 HORZ. (FT)

FILE: 110535_I69_MTTYP_001.dgn

DATE: 07/27/20
DESIGN UNIT: BLOCK
TSC: DAVISON

CS: 25084, 25085
JN: 132026

MAINTAINING TRAFFIC STAGE TYPICAL CROSS SEC
I-69 TYPICALS
EXISTING & PRE-STAGES

DRAWING: I-69 MTTYP 9
SHEET SECT: 178

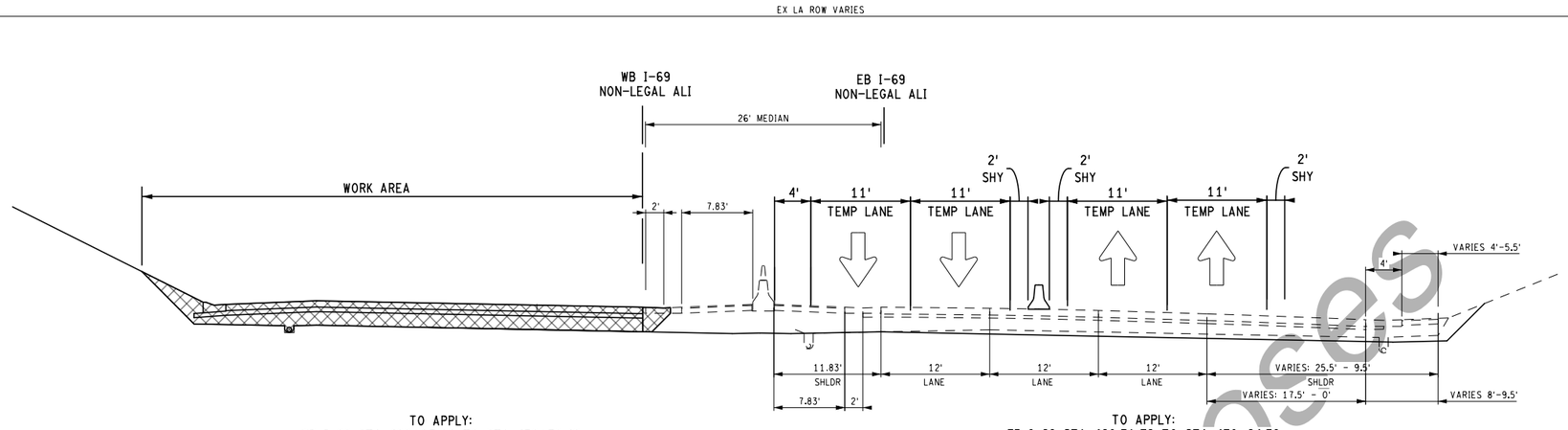

STAGES 2A & 2B

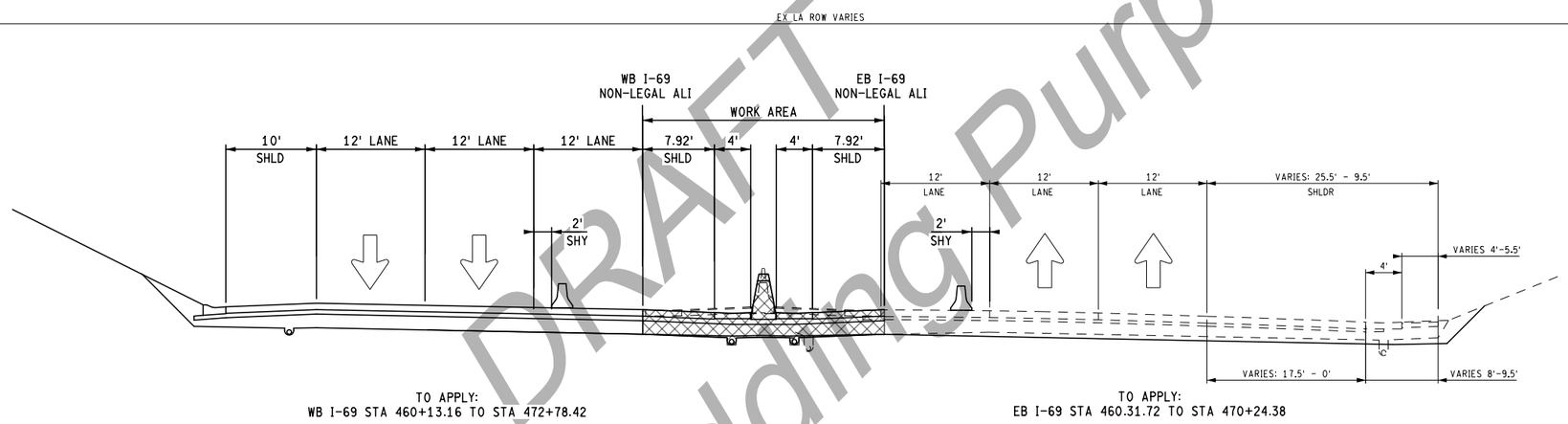

STAGE 2C

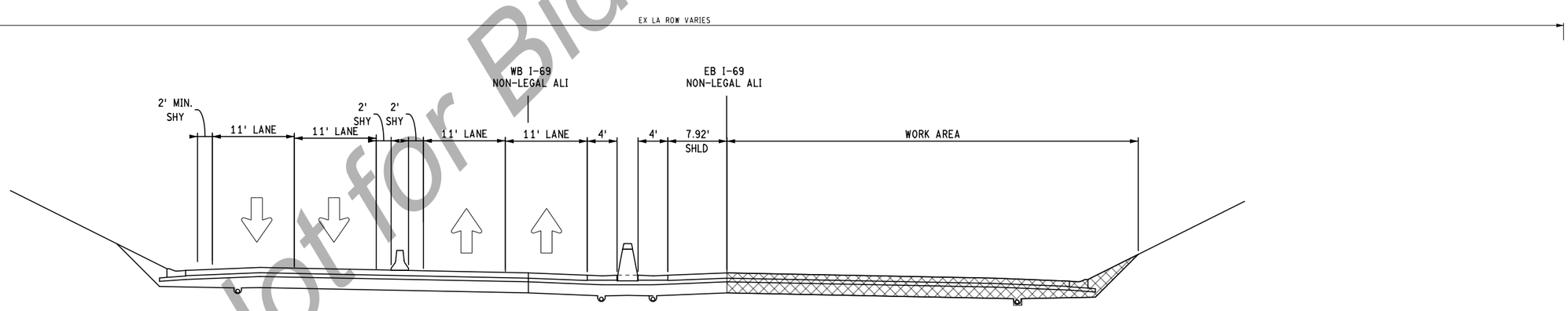

STAGE 3A & 3B

DRAFT
Not for Bidding Purposes

FINAL ROW PLAN REVISIONS (SUBMITTAL DATE:)							
NO.	DATE	AUTH	DESCRIPTION	NO.	DATE	AUTH	DESCRIPTION

AECOM

MDOT Michigan Department of Transportation

0 HORZ. (FT)

FILE: 110535_I69_MTTYP_001.dgn

DATE: 07/27/20
DESIGN UNIT: BLOCK
TSC: DAVISON

CS: 25084, 25085
JN: 132026

MAINTAINING TRAFFIC STAGE TYPICAL CROSS SEC
I-69 TYPICALS
STAGES 2 & 3

DRAWING: I-69 MTTYP 10

SHEET SECT 179

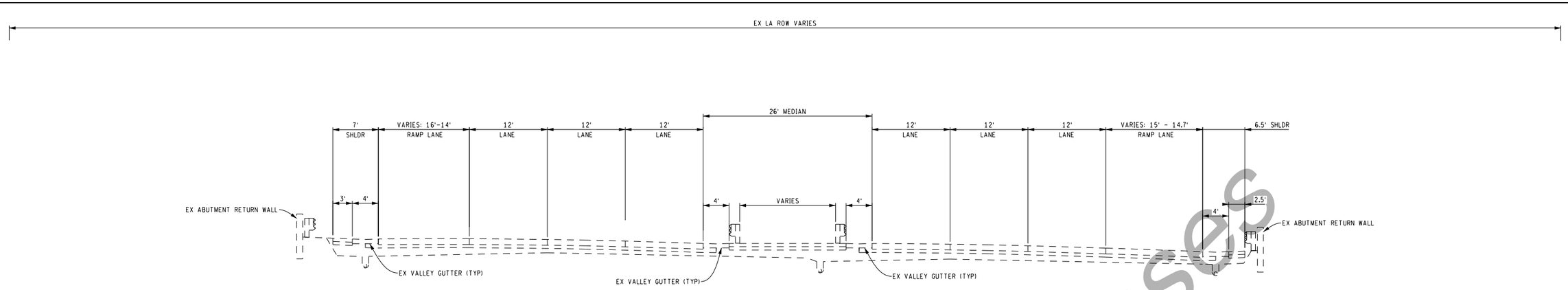

TO APPLY:
WB I-69 STA 472+78.42 TO STA 475+41.40

EXISTING

TO APPLY:
EB I-69 STA 470+24.38 TO STA 475+37.09

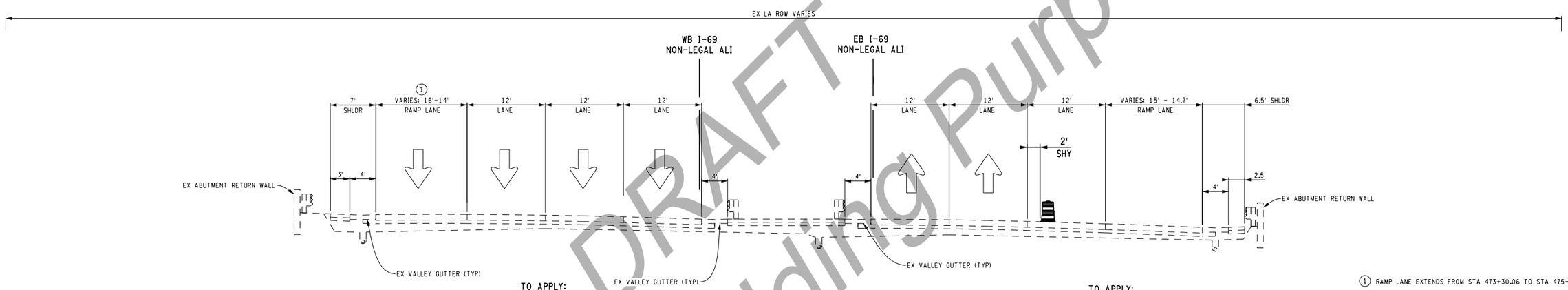

TO APPLY:
WB I-69 STA 472+78.42 TO STA 475+41.40

TO APPLY:
EB I-69 STA 470+24.38 TO STA 475+37.09

1 RAMP LANE EXTENDS FROM STA 473+30.06 TO STA 475+41.10

STAGE 1A (PRE-STAGE)

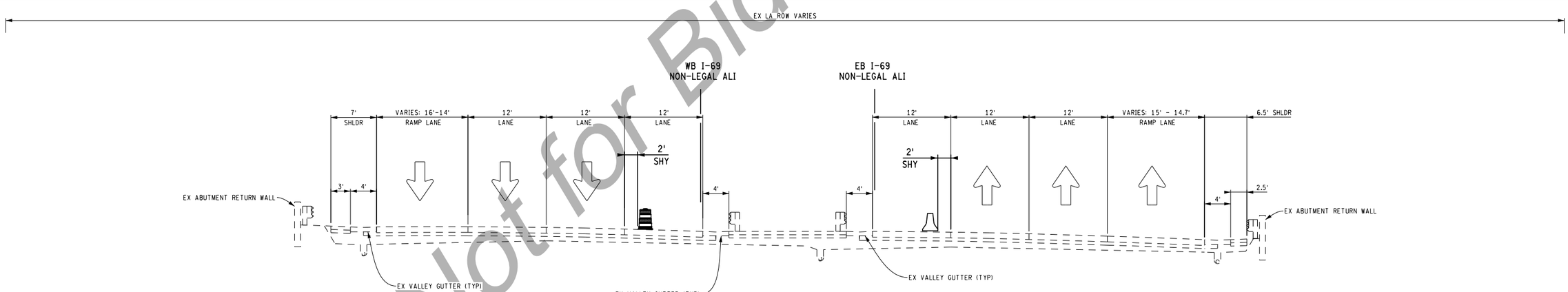

TO APPLY:
WB I-69 STA 472+78.42 TO STA 475+41.40

TO APPLY:
EB I-69 STA 470+24.38 TO STA 475+37.09

STAGE 1B (PRE-STAGE)

DRAFT
Not for Bidding Purposes

FINAL ROW PLAN REVISIONS (SUBMITTAL DATE:)							
NO.	DATE	AUTH	DESCRIPTION	NO.	DATE	AUTH	DESCRIPTION

AECOM

MDOT Michigan Department of Transportation

0 HORZ. (FT)

FILE: 110535_I69_MTTYP_001.dgn

DATE: 07/27/20
DESIGN UNIT: BLOCK
TSC: DAVISON

CS: 25084, 25085
JN: 132026

MAINTAINING TRAFFIC STAGE TYPICAL CROSS SEC
I-69 TYPICALS
EXISTING & PRE-STAGES

DRAWING: I-69 MTTYP 11
SHEET SECT 180

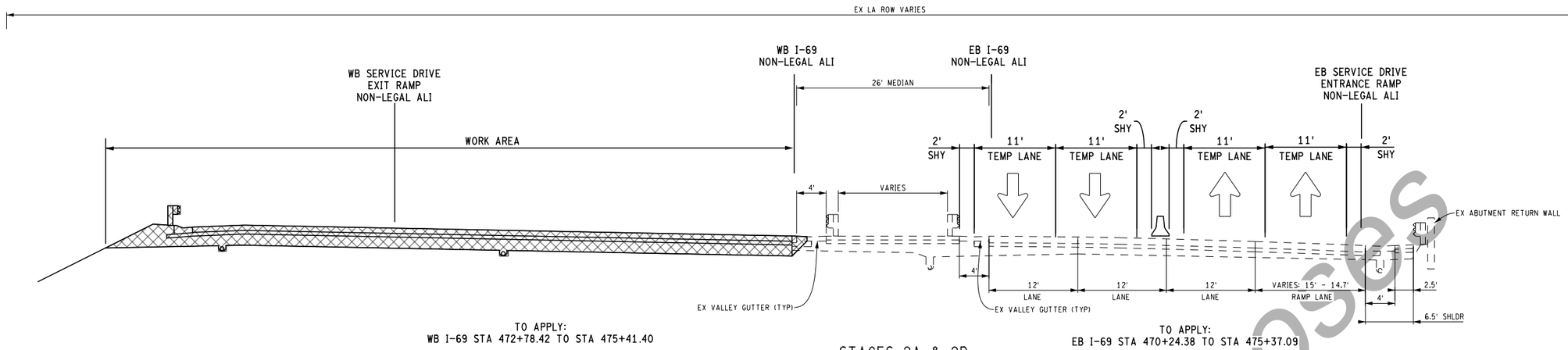

STAGES 2A & 2B

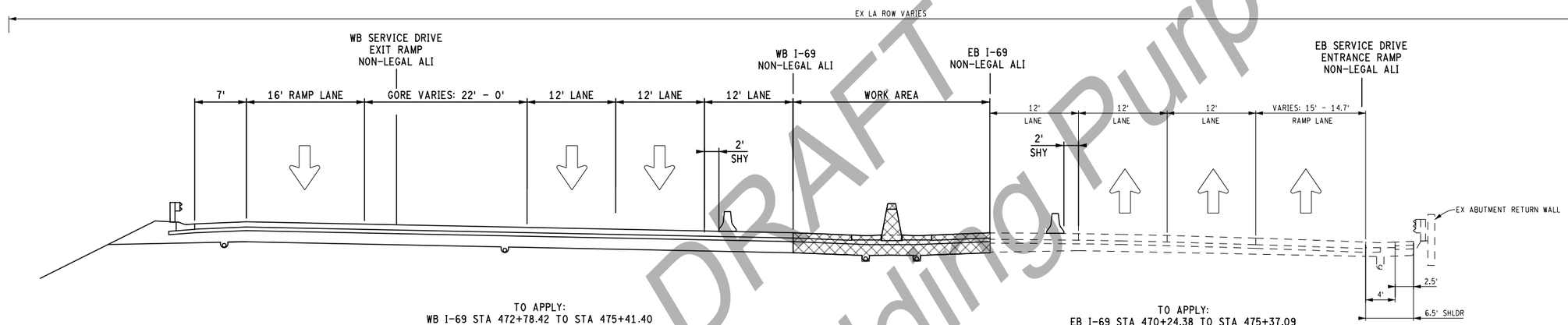

STAGE 2C

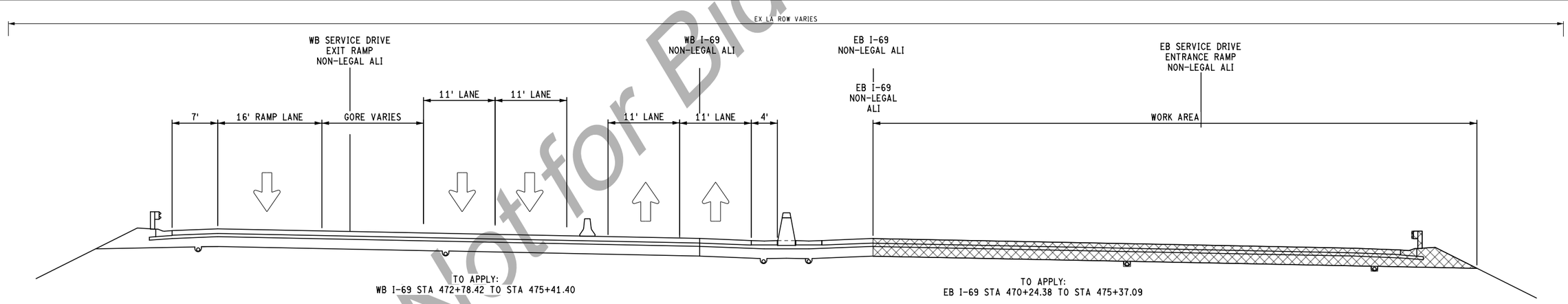

STAGE 3A & 3B

DRAFT
Not for Bidding Purposes

FINAL ROW PLAN REVISIONS (SUBMITTAL DATE:)							
NO.	DATE	AUTH	DESCRIPTION	NO.	DATE	AUTH	DESCRIPTION

AECOM

MDOT Michigan Department of Transportation

0 HORZ. (FT)

FILE: 110535_I69_MTTYP_001.dgn

DATE: 07/27/20
DESIGN UNIT: BLOCK
TSC: DAVISON

CS: 25084, 25085
JN: 132026

MAINTAINING TRAFFIC STAGE TYPICAL CROSS SEC
I-69 TYPICALS
STAGES 2 & 3

DRAWING: I-69 MTTYP 12
SHEET SECT: 181

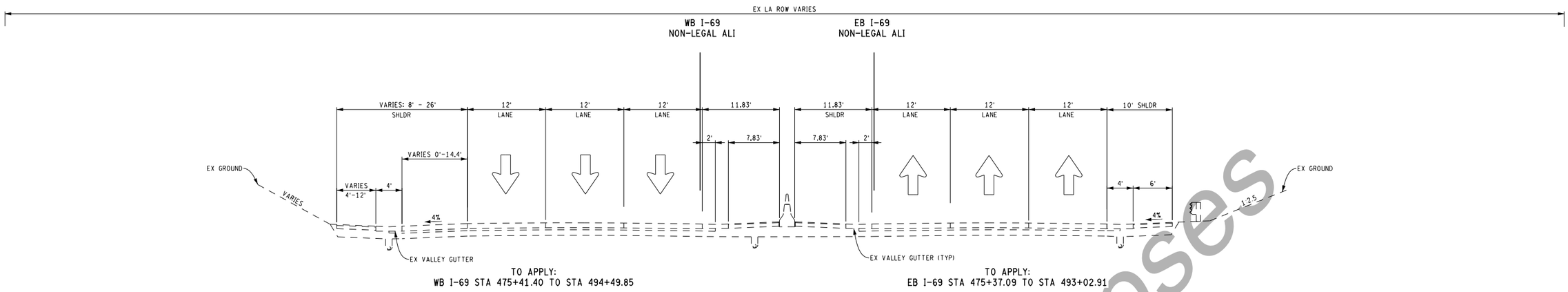

EXISTING

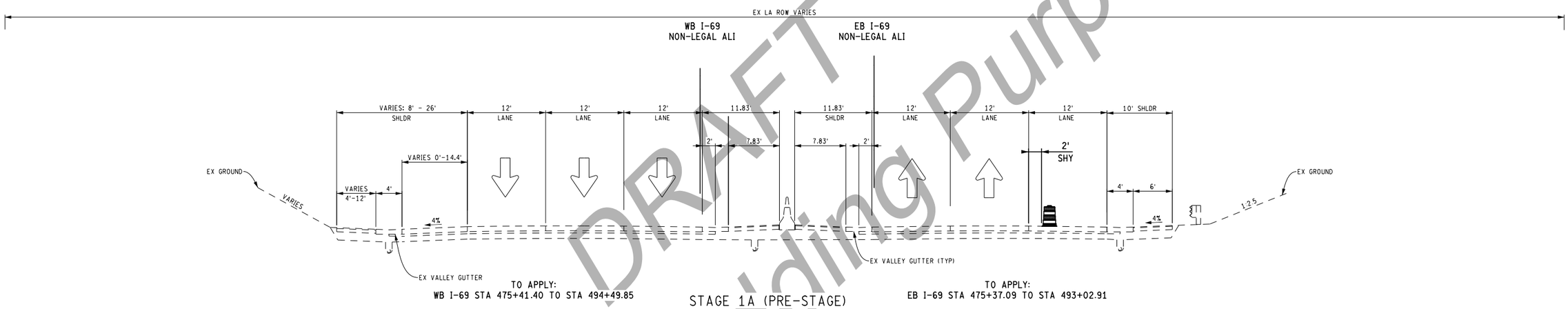

STAGE 1A (PRE-STAGE)

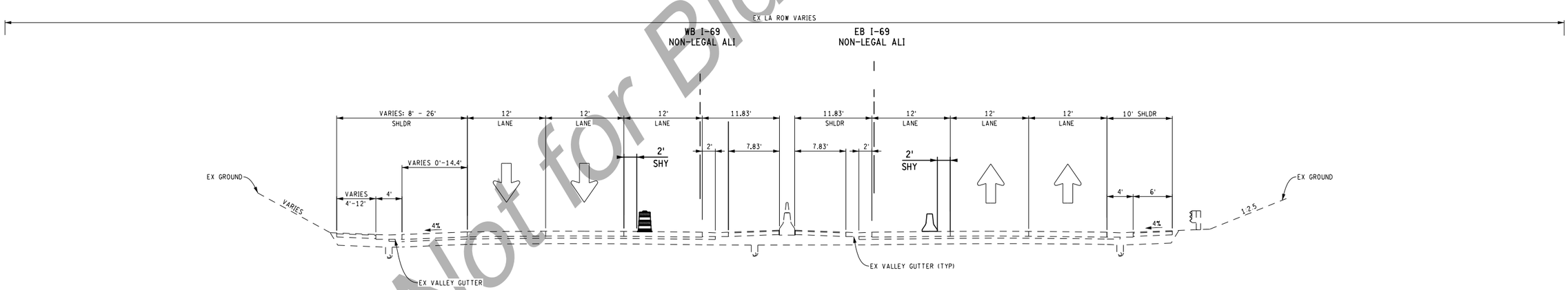

STAGE 1B (PRE-STAGE)

DRAFT
Not for Bidding Purposes

FINAL ROW PLAN REVISIONS (SUBMITTAL DATE:)							
NO.	DATE	AUTH	DESCRIPTION	NO.	DATE	AUTH	DESCRIPTION

AECOM

MDOT Michigan Department of Transportation

0 HORZ. (FT)

FILE: 110535_I69_MTTYP_001.dgn

DATE: 07/27/20
DESIGN UNIT: BLOCK
TSC: DAVISON

CS: 25084, 25085
JN: 132026

MAINTAINING TRAFFIC STAGE TYPICAL CROSS SEC
I-69 TYPICALS
EXISTING & PRE-STAGES

DRAWING: I-69 MTTYP 13

SHEET SECT 182

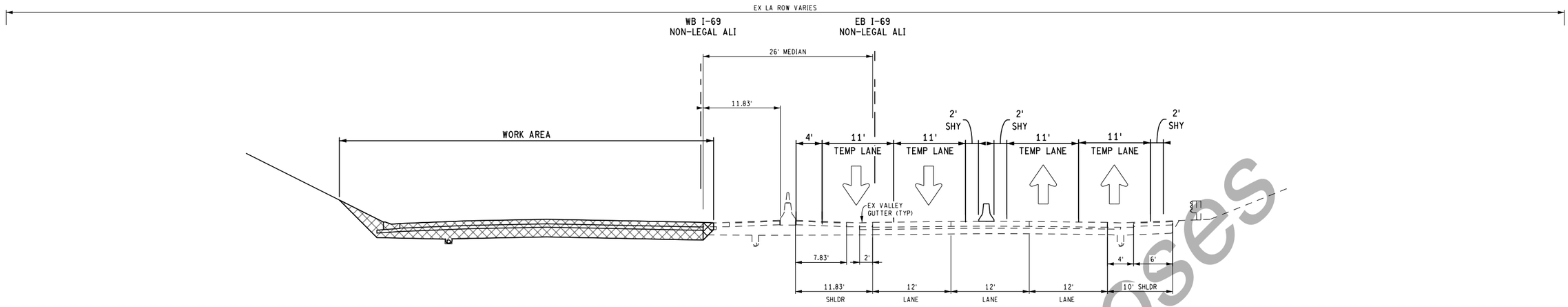

TO APPLY:
WB I-69 STA 475+41.40 TO STA 494+49.85

STAGES 2A & 2B

TO APPLY:
EB I-69 STA 475+37.09 TO STA 493+02.91

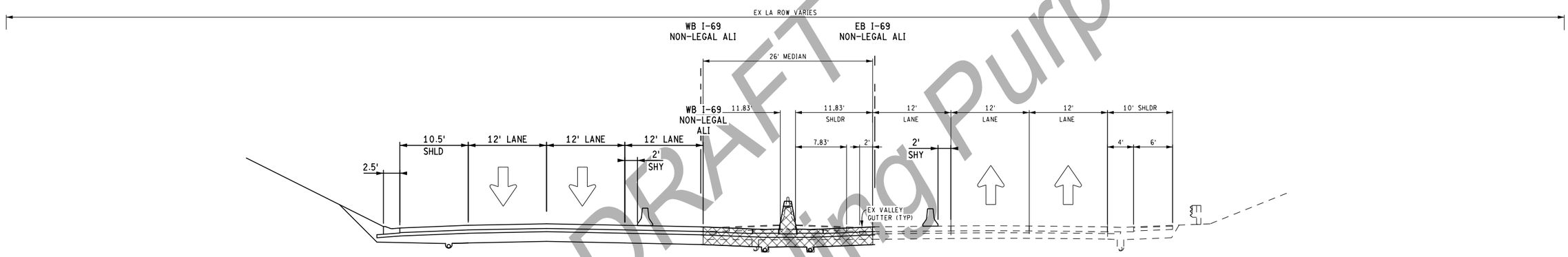

TO APPLY:
WB I-69 STA 475+41.40 TO STA 494+49.85

STAGE 2C

TO APPLY:
EB I-69 STA 475+37.09 TO STA 493+02.91

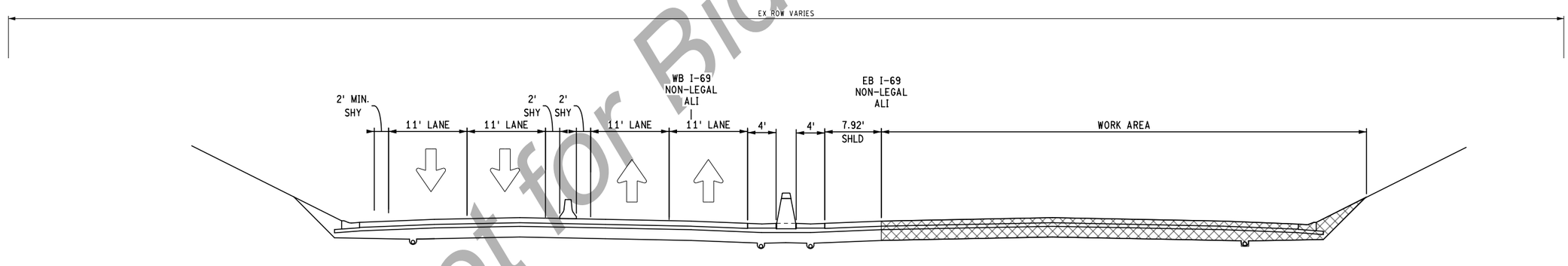

TO APPLY:
WB I-69 STA 475+41.40 TO STA 494+49.85

TO APPLY:
EB I-69 STA 475+37.09 TO STA 493+02.91

STAGE 3A & 3B

DRAFT
Not for Bidding Purposes

FINAL ROW PLAN REVISIONS (SUBMITTAL DATE:)							
NO.	DATE	AUTH	DESCRIPTION	NO.	DATE	AUTH	DESCRIPTION

AECOM

MDOT Michigan Department of Transportation

0 HORZ. (FT)

FILE: 110535_I69_MTTYP_001.dgn

DATE: 07/27/20
DESIGN UNIT: BLOCK
TSC: DAVISON

CS: 25084, 25085
JN: 132026

MAINTAINING TRAFFIC STAGE TYPICAL CROSS SEC
I-69 TYPICALS
STAGES 2 & 3

DRAWING: I-69 MTTYP 14
SHEET SECT: 183

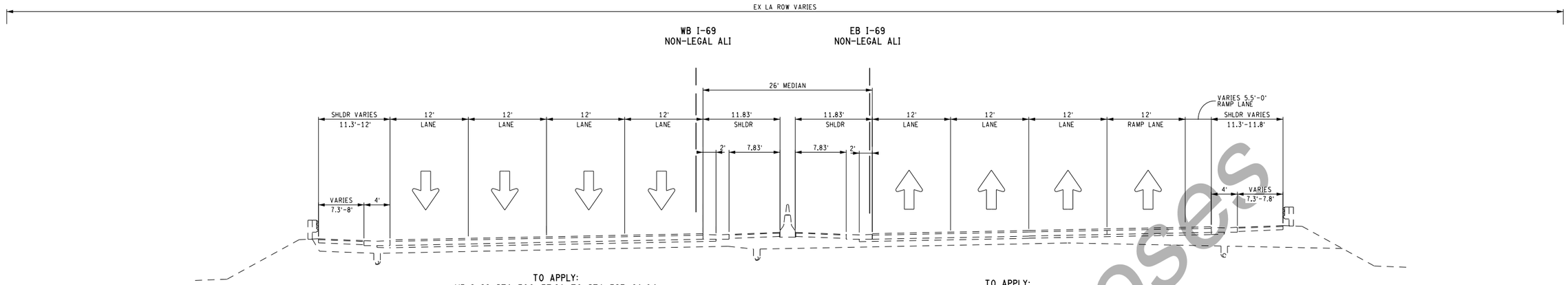

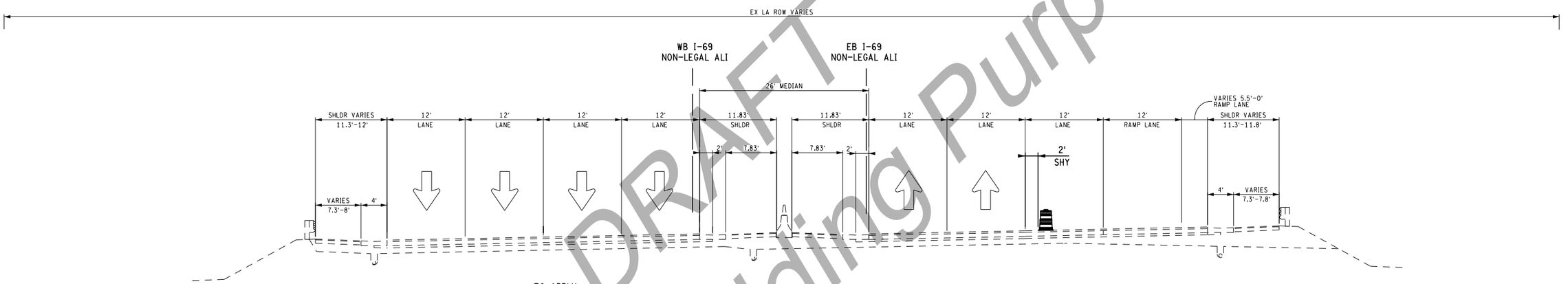

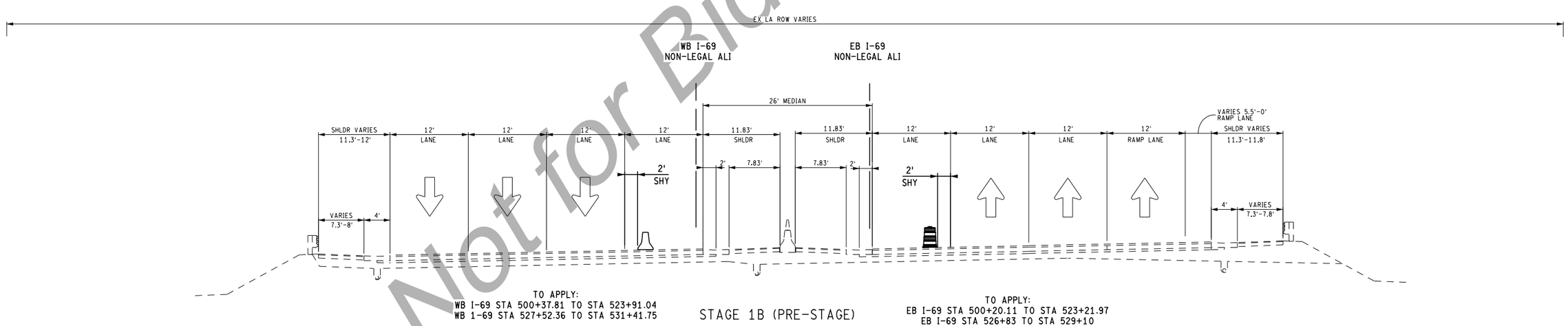

DRAFT
Not for Bidding Purposes

FINAL ROW PLAN REVISIONS (SUBMITTAL DATE:)							
NO.	DATE	AUTH	DESCRIPTION	NO.	DATE	AUTH	DESCRIPTION

AECOM

MDOT Michigan Department of Transportation

0 HORZ. (FT)

FILE: 110535_I69_MTTYP_001.dgn

DATE: 07/27/20
DESIGN UNIT: BLOCK
TSC: DAVISON

CS: 25084, 25085
JN: 132026

MAINTAINING TRAFFIC STAGE TYPICAL CROSS SEC
I-69 TYPICALS
EXISTING & PRE-STAGES

DRAWING: I-69 MTTYP 15
SHEET SECT: 184

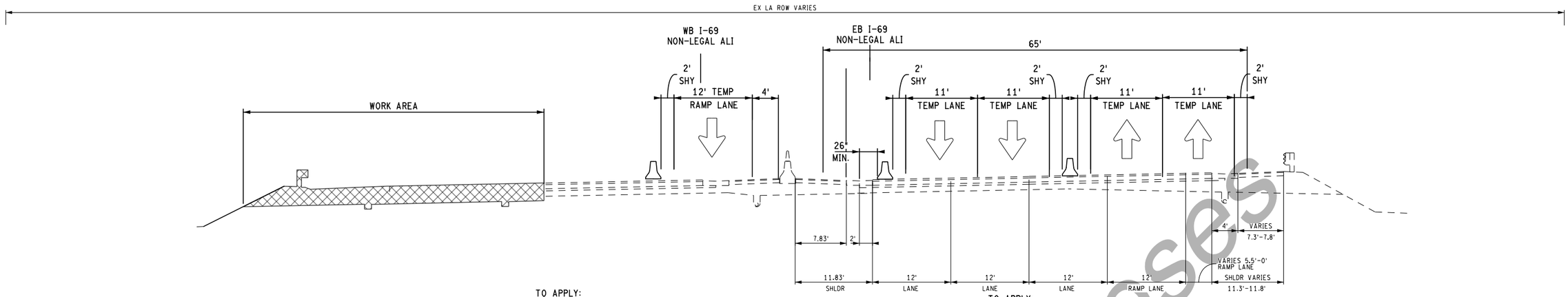

STAGE 2A

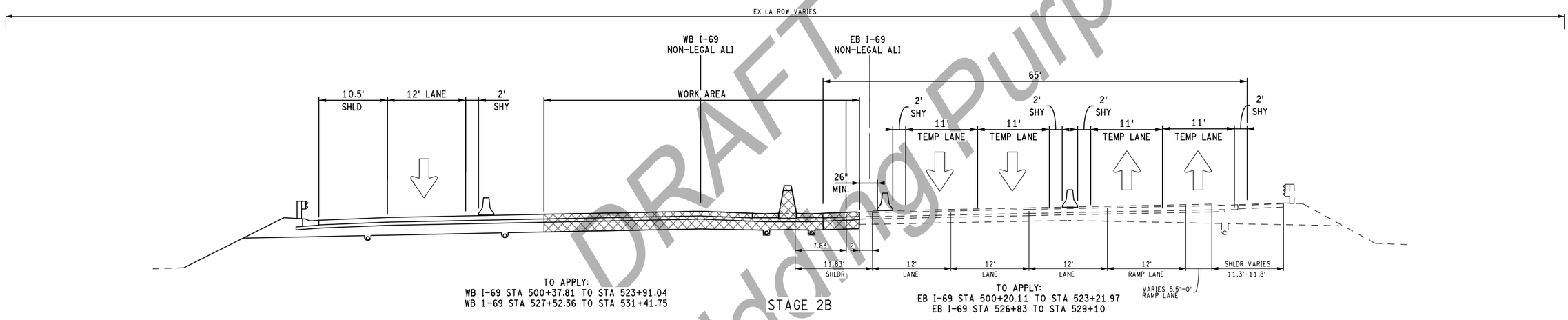

STAGE 2B

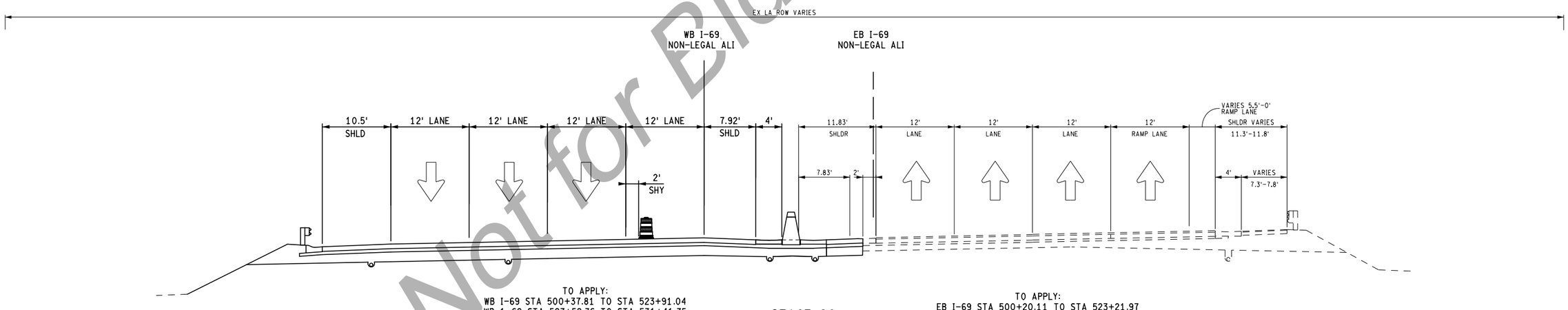

STAGE 2C

DRAFT
Not for Bidding Purposes

FINAL ROW PLAN REVISIONS (SUBMITTAL DATE:)							
NO.	DATE	AUTH	DESCRIPTION	NO.	DATE	AUTH	DESCRIPTION

AECOM

MDOT Michigan Department of Transportation

0 HORZ. (FT)

FILE: 110535_I69_MTTYP_001.dgn

DATE: 07/27/20
DESIGN UNIT: BLOCK
TSC: DAVISON

CS: 25084, 25085
JN: 132026

MAINTAINING TRAFFIC STAGE TYPICAL CROSS SEC
I-69 TYPICALS
STAGE 2

DRAWING: I-69 MTTYP 16
SHEET SECT: 185

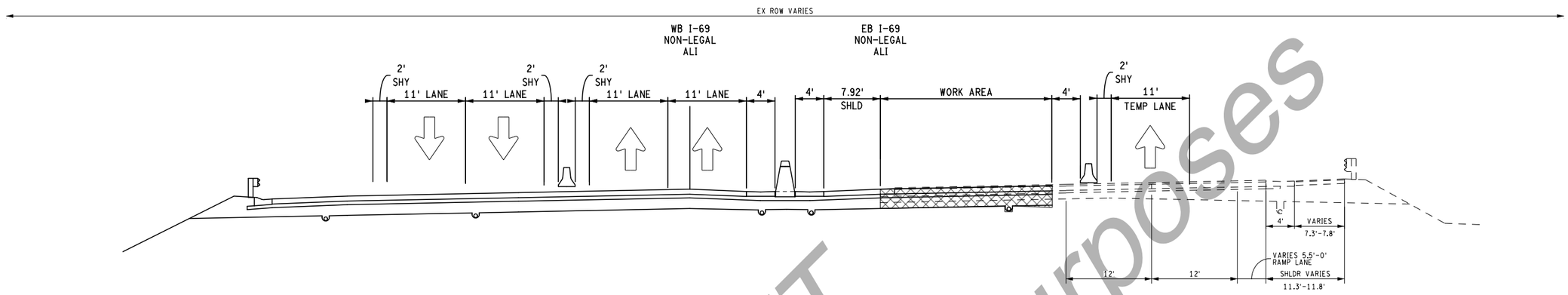

TO APPLY:
WB I-69 STA 500+37.81 TO STA 523+91.04
WB 1-69 STA 527+52.36 TO STA 531+41.75

TO APPLY:
EB I-69 STA 500+20.11 TO STA 523+21.97
EB I-69 STA 526+83 TO STA 529+10

STAGE 3A

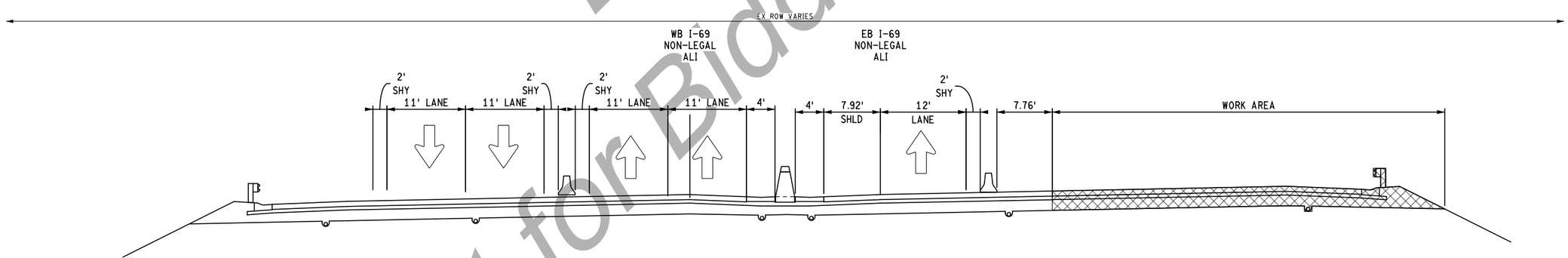

TO APPLY:
WB I-69 STA 500+37.81 TO STA 523+91.04
WB 1-69 STA 527+52.36 TO STA 531+41.75

TO APPLY:
EB I-69 STA 500+20.11 TO STA 523+21.97
EB I-69 STA 526+83 TO STA 529+10

STAGE 3B

DRAFT
Not for Bidding Purposes

FINAL ROW PLAN REVISIONS (SUBMITTAL DATE:)							
NO.	DATE	AUTH	DESCRIPTION	NO.	DATE	AUTH	DESCRIPTION

AECOM

MDOT Michigan Department of Transportation

0 HORZ. (FT)

FILE: 110535_I69_MTTYP_001.dgn

DATE: 07/27/20
DESIGN UNIT: BLOCK
TSC: DAVISON

CS: 25084, 25085
JN: 132026

MAINTAINING TRAFFIC STAGE TYPICAL CROSS SEC
I-69 TYPICALS
STAGE 3

DRAWING: I-69 MTTYP 17
SHEET SECT 186

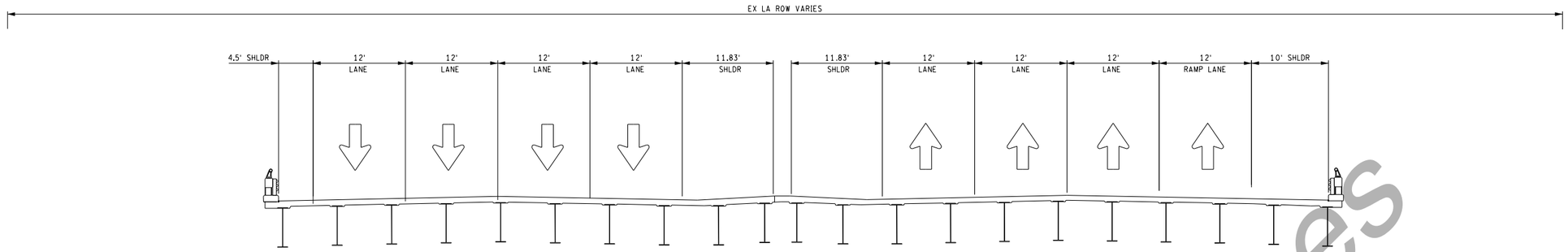

EXISTING

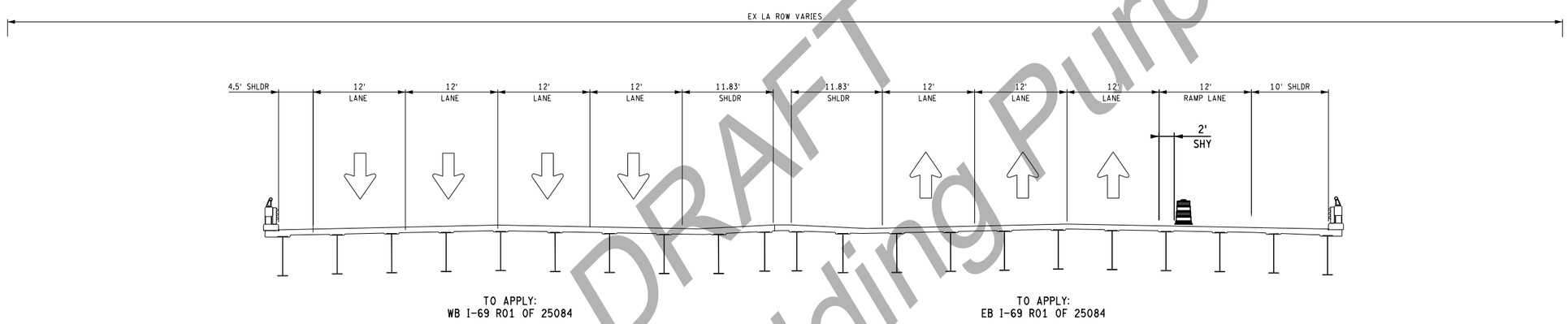

STAGE 1A (PRE-STAGE)

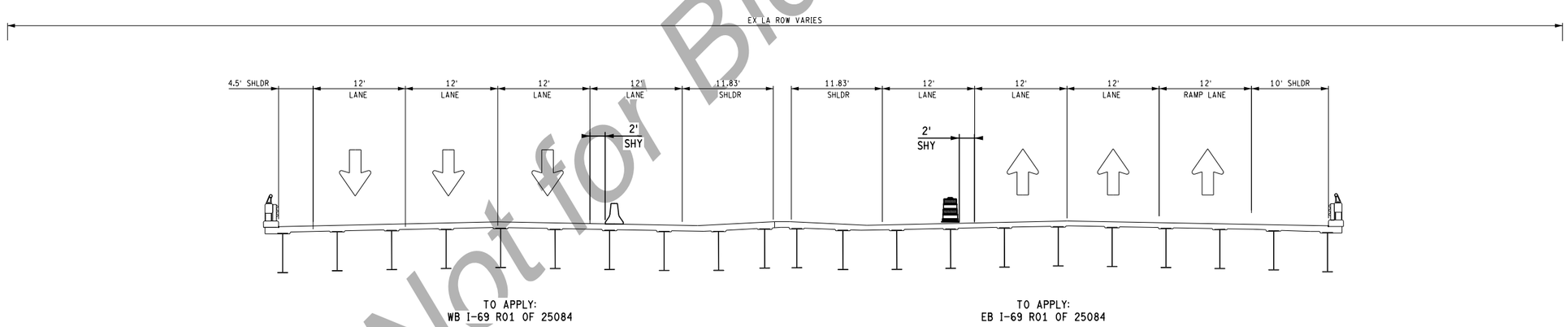

STAGE 1B (PRE-STAGE)

DRAFT
Not for Bidding Purposes

FINAL ROW PLAN REVISIONS (SUBMITTAL DATE:)							
NO.	DATE	AUTH	DESCRIPTION	NO.	DATE	AUTH	DESCRIPTION

AECOM

MDOT Michigan Department of Transportation

0 HORZ. (FT)

FILE: 110535_I69_MTTYP_001.dgn

DATE: 07/27/20
DESIGN UNIT: BLOCK
TSC: DAVISON

CS: 25084, 25085
JN: 132026

MAINTAINING TRAFFIC STAGE TYPICAL CROSS SEC
I-69 TYPICALS AT R01 OF 25084
EXISTING & PRE-STAGES

DRAWING: I-69 MTTYP 18
SHEET SECT: 187

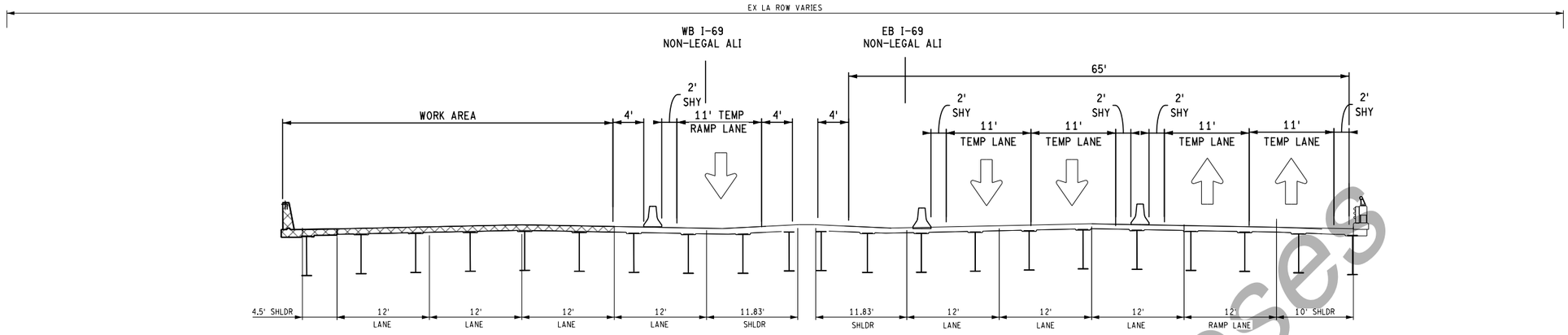

TO APPLY:
WB I-69 R01 OF 25084

STAGE 2A

TO APPLY:
EB I-69 R01 OF 25084

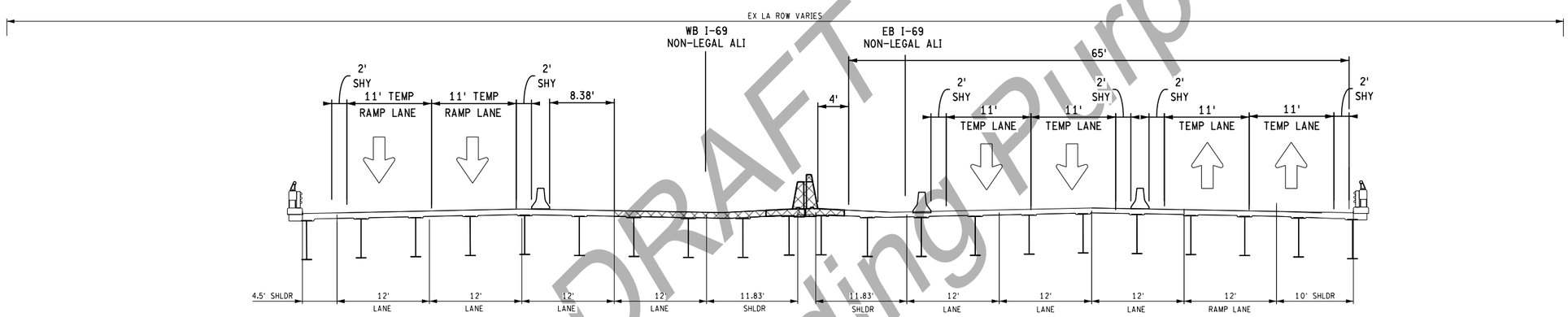

TO APPLY:
WB I-69 R01 OF 25084

STAGE 2B

TO APPLY:
EB I-69 R01 OF 25084

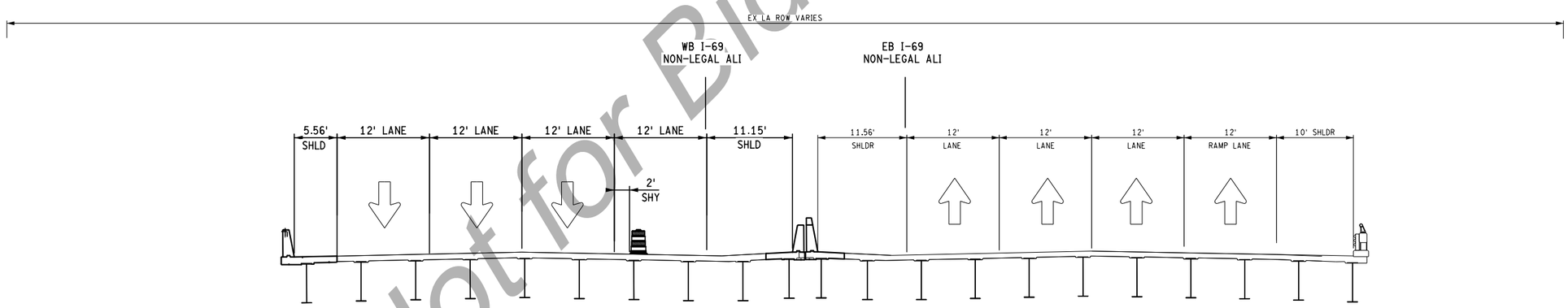

TO APPLY:
WB I-69 R01 OF 25084

STAGE 2C

TO APPLY:
EB I-69 R01 OF 25084

DRAFT
Not for Bidding Purposes

FINAL ROW PLAN REVISIONS (SUBMITTAL DATE:)							
NO.	DATE	AUTH	DESCRIPTION	NO.	DATE	AUTH	DESCRIPTION

AECOM

MDOT Michigan Department of Transportation

0 HORZ. (FT)

FILE: 110535_I69_MTTYP_001.dgn

DATE: 07/27/20
DESIGN UNIT: BLOCK
TSC: DAVISON

CS: 25084, 25085
JN: 132026

MAINTAINING TRAFFIC STAGE TYPICAL CROSS SEC
I-69 TYPICALS AT R01 OF 25084
STAGE 2

DRAWING: I-69 MTTYP 19
SHEET SECT: 188

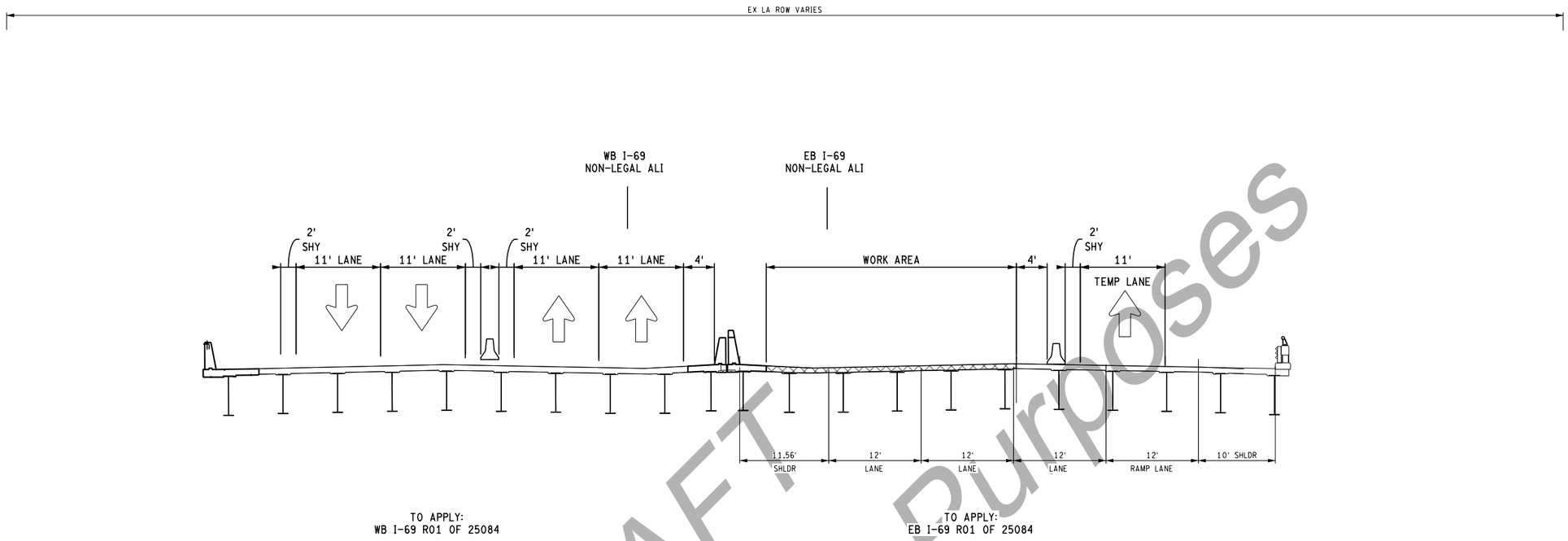

STAGE 3A

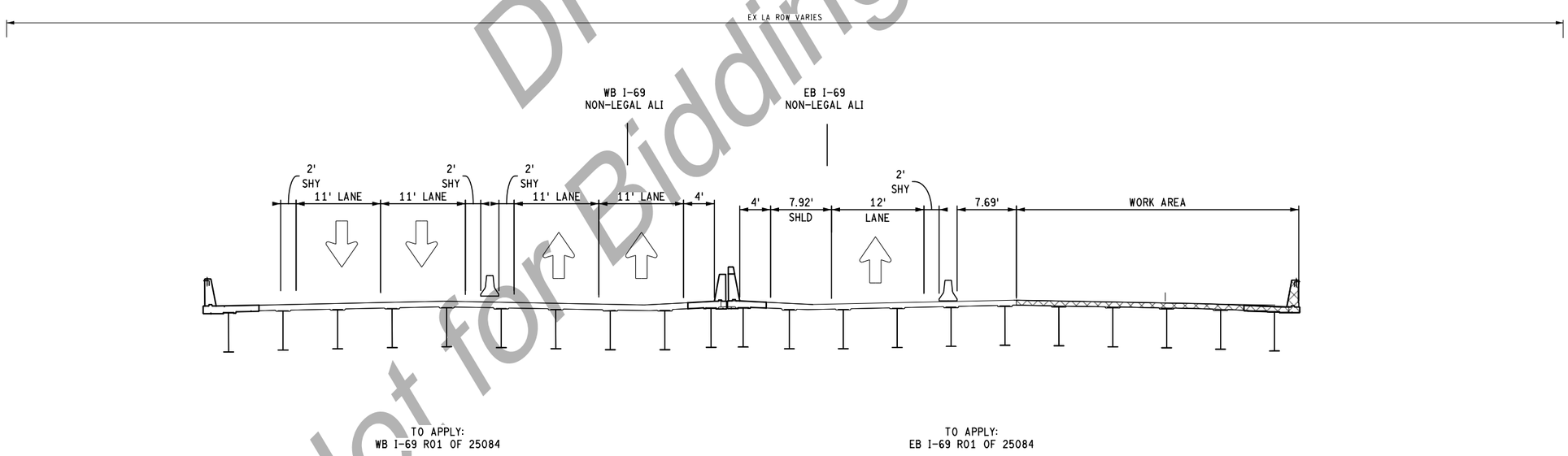

STAGE 3B

DRAFT
Not for Bidding Purposes

FINAL ROW PLAN REVISIONS (SUBMITTAL DATE:)							
NO.	DATE	AUTH	DESCRIPTION	NO.	DATE	AUTH	DESCRIPTION

AECOM

MDOT Michigan Department of Transportation

0 HORZ. (FT)

FILE: 110535_I69_MTTYP_001.dgn

DATE: 07/27/20
DESIGN UNIT: BLOCK
TSC: DAVISON

CS: 25084, 25085
JN: 132026

MAINTAINING TRAFFIC STAGE TYPICAL CROSS SEC
I-69 TYPICALS AT R01 OF 25084
STAGE 3

DRAWING: I-69 MTTYP 20
SHEET SECT: 189

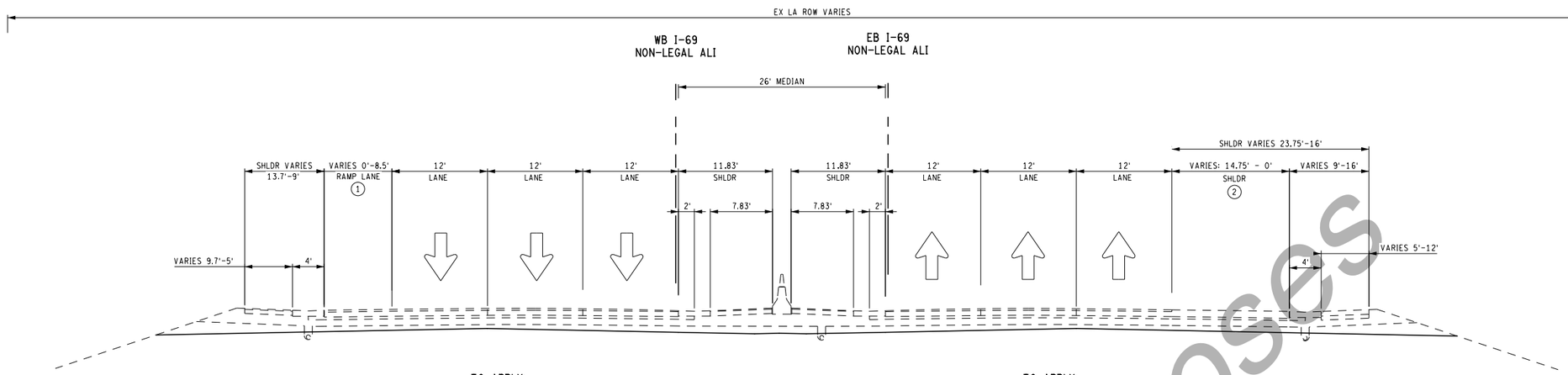

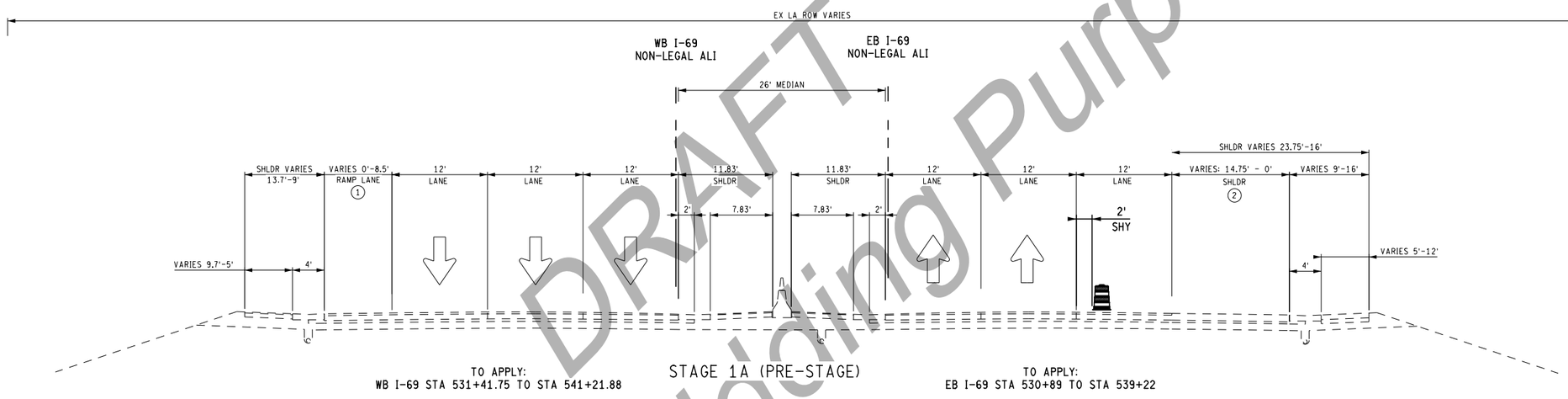

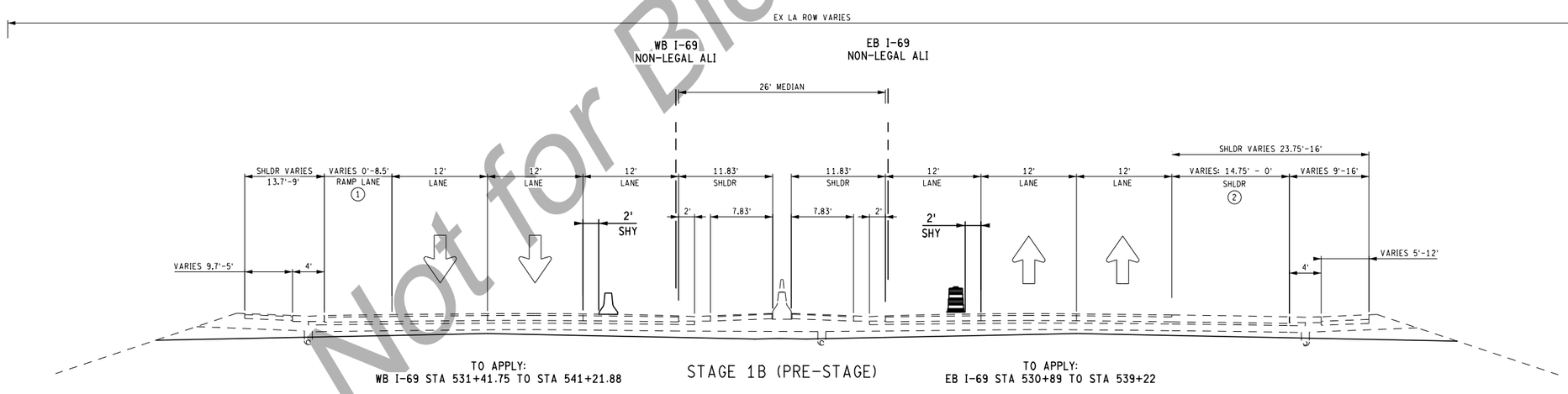

DRAFT
Not for Bidding Purposes

FINAL ROW PLAN REVISIONS (SUBMITTAL DATE:)							
NO.	DATE	AUTH	DESCRIPTION	NO.	DATE	AUTH	DESCRIPTION

AECOM

MDOT Michigan Department of Transportation

0 HORZ. (FT)

FILE: 110535_I69_MTTYP_001.dgn

DATE: 07/27/20
DESIGN UNIT: BLOCK
TSC: DAVISON

CS: 25084, 25085
JN: 132026

MAINTAINING TRAFFIC STAGE TYPICAL CROSS SEC
I-69 TYPICALS
EXISTING & PRE-STAGES

DRAWING: I-69 MTTYP 21
SHEET: SECT 190

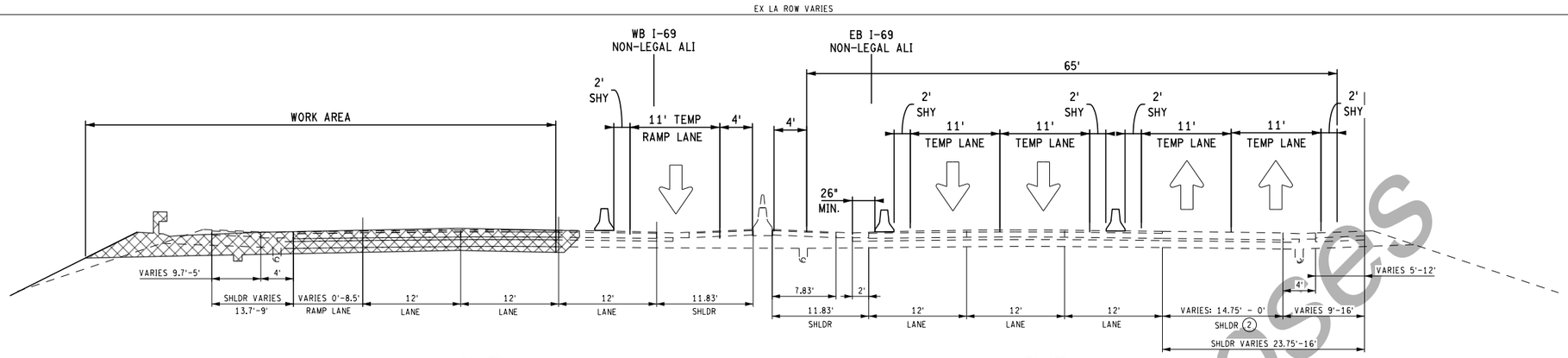

TO APPLY:
WB I-69 STA 531+41.75 TO STA 541+21.88

STAGE 2A

TO APPLY:
EB I-69 STA 530+89 TO STA 539+22

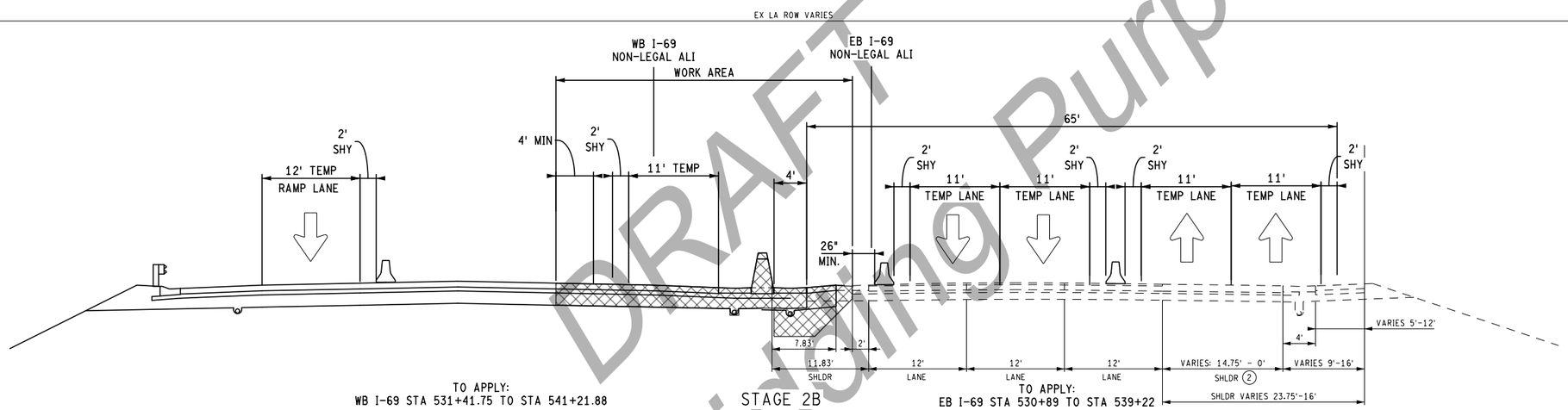

TO APPLY:
WB I-69 STA 531+41.75 TO STA 541+21.88

STAGE 2B

TO APPLY:
EB I-69 STA 530+89 TO STA 539+22

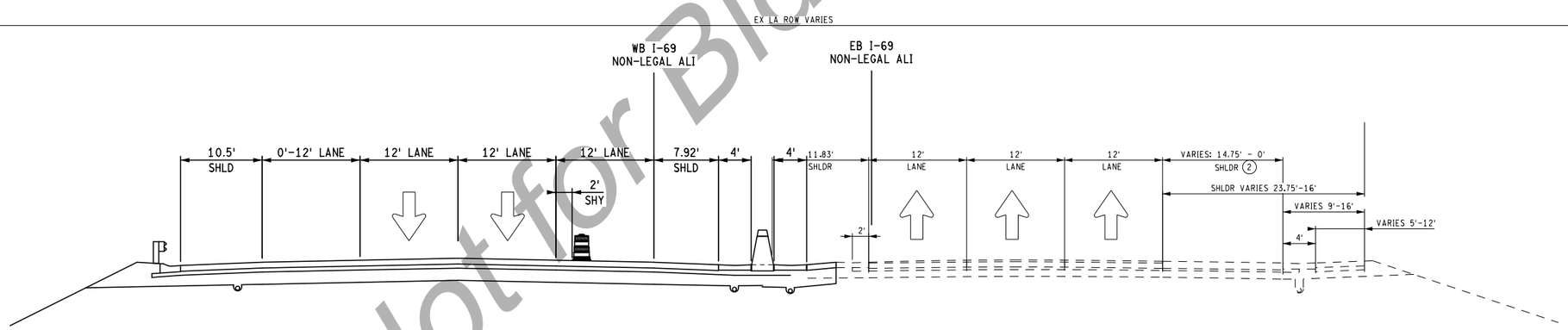

TO APPLY:
WB I-69 STA 531+41.75 TO STA 541+21.88

TO APPLY:
EB I-69 STA 530+89 TO STA 539+22

STAGE 2C

DRAFT
Not for Bidding Purposes

FINAL ROW PLAN REVISIONS (SUBMITTAL DATE:)							
NO.	DATE	AUTH	DESCRIPTION	NO.	DATE	AUTH	DESCRIPTION

AECOM

MDOT Michigan Department of Transportation

0 HORZ. (FT)

FILE: 110535_I69_MTTYP_001.dgn

DATE: 07/27/20
DESIGN UNIT: BLOCK
TSC: DAVISON

CS: 25084, 25085
JN: 132026

MAINTAINING TRAFFIC STAGE TYPICAL CROSS SEC
I-69 TYPICALS
STAGE 2

DRAWING: I-69 MTTYP 22
SHEET: SECT 191

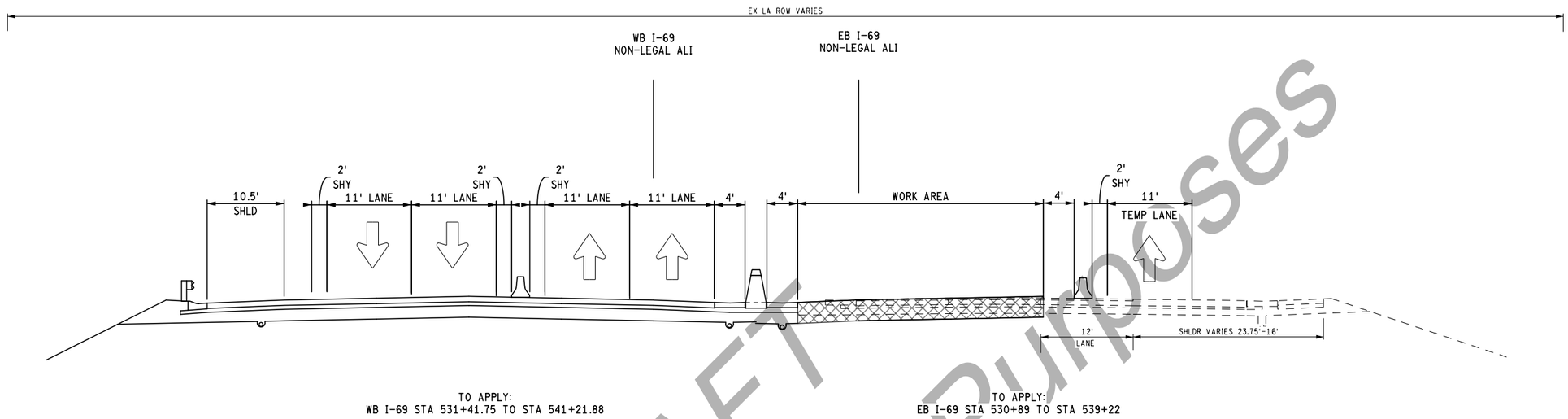

STAGE 3A

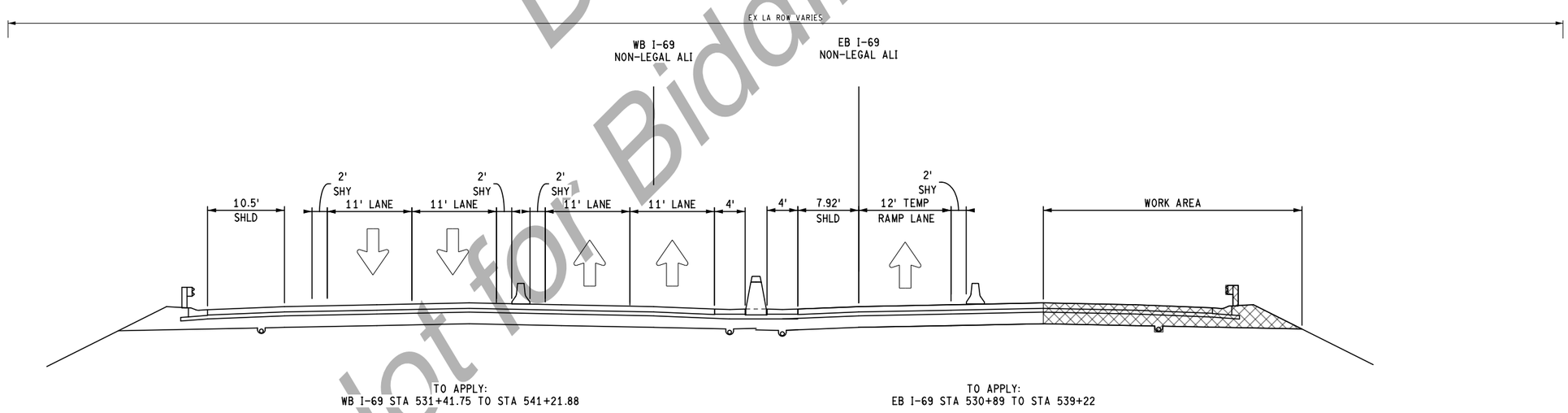

STAGE 3B

DRAFT
Not for Bidding Purposes

FINAL ROW PLAN REVISIONS (SUBMITTAL DATE:)							
NO.	DATE	AUTH	DESCRIPTION	NO.	DATE	AUTH	DESCRIPTION

AECOM

MDOT Michigan Department of Transportation

0 HORZ. (FT)

FILE: 110535_I69_MTTYP_001.dgn

DATE: 07/27/20
DESIGN UNIT: BLOCK
TSC: DAVISON

CS: 25084, 25085
JN: 132026

MAINTAINING TRAFFIC STAGE TYPICAL CROSS SEC
I-69 TYPICALS
STAGE 3

DRAWING: I-69 MTTYP 23

SHEET SECT 192

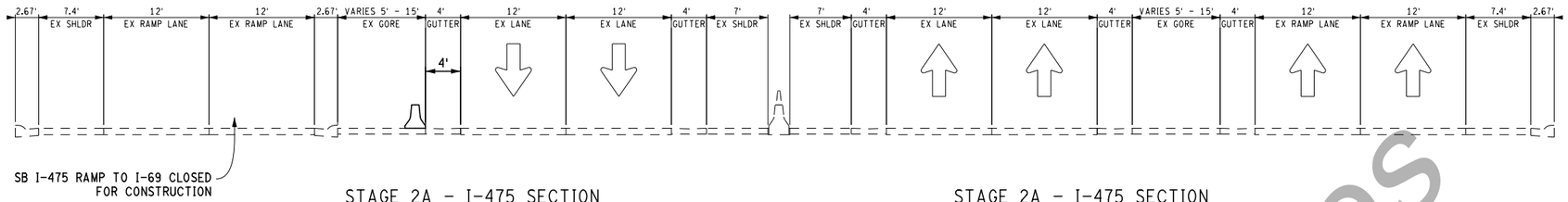

STAGE 2A - I-475 SECTION
TO APPLY:
SB I-475 UNDER E 5TH ST BRIDGE

STAGE 2A - I-475 SECTION
TO APPLY:
NB I-475 UNDER E 5TH ST BRIDGE

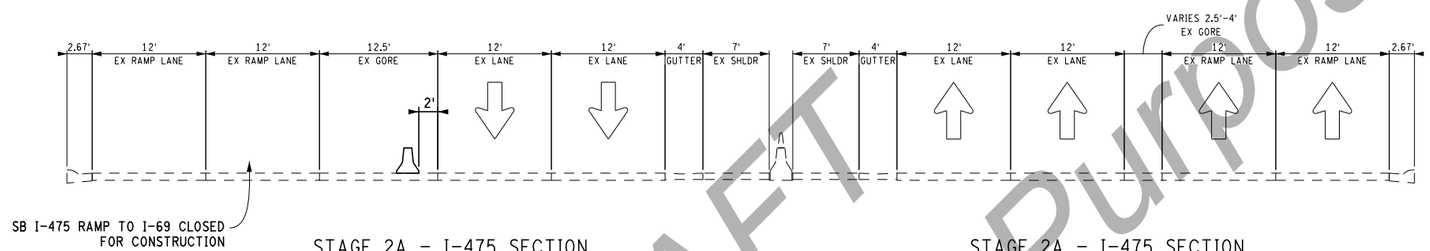

STAGE 2A - I-475 SECTION
TO APPLY:
SB I-475 UNDER E COURT ST BRIDGE

STAGE 2A - I-475 SECTION
TO APPLY:
NB I-475 UNDER E COURT ST BRIDGE

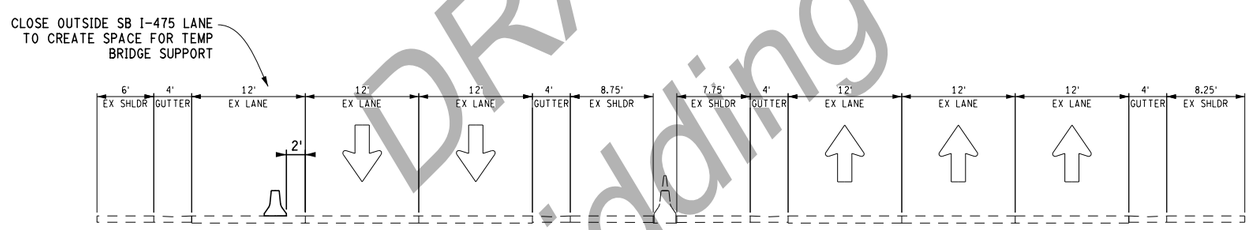

STAGE 2A - I-475 SECTION
TO APPLY:
SB I-475 UNDER E 3RD ST BRIDGE

STAGE 2A - I-475 SECTION
TO APPLY:
NB I-475 UNDER E 3RD ST BRIDGE

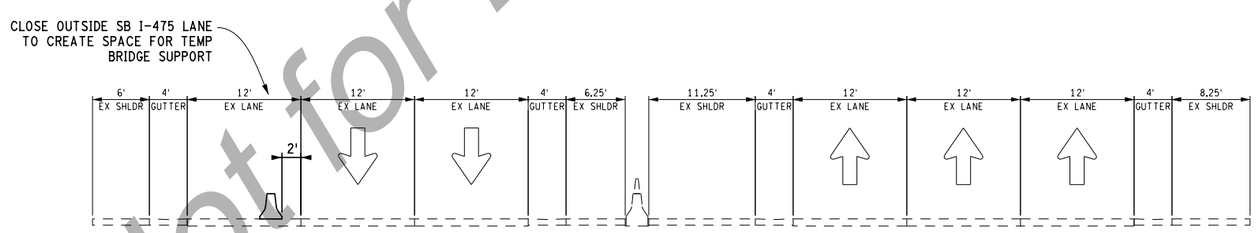

STAGE 2A - I-475 SECTION
TO APPLY:
SB I-475 UNDER E 2ND ST BRIDGE

STAGE 2A - I-475 SECTION
TO APPLY:
NB I-475 UNDER E 2ND ST BRIDGE

DRAFT
Not for Bidding Purposes

FINAL ROW PLAN REVISIONS (SUBMITTAL DATE:)							
NO.	DATE	AUTH	DESCRIPTION	NO.	DATE	AUTH	DESCRIPTION

AECOM

MDOT Michigan Department of Transportation

0 HORZ. (FT) 16

FILE: 110535_I475_MTTYP_001.dgn

DATE: 07/27/20
DESIGN UNIT: BLOCK
TSC: DAVISON

CS: 25084, 25107
JN: 132026

MAINTAINING TRAFFIC STAGE TYPICAL CROSS SEC
I-475 BRIDGE WORK TYPICALS
STAGE 2A TYPICALS

DRAWING: I-475 MTTYP 24
SHEET: SECT 1

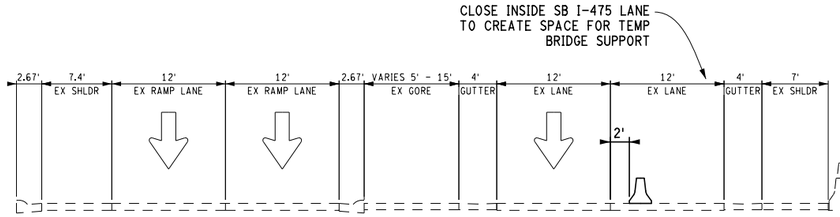

STAGE 2C - I-475 SECTION
TO APPLY:
SB I-475 UNDER E 5TH ST BRIDGE

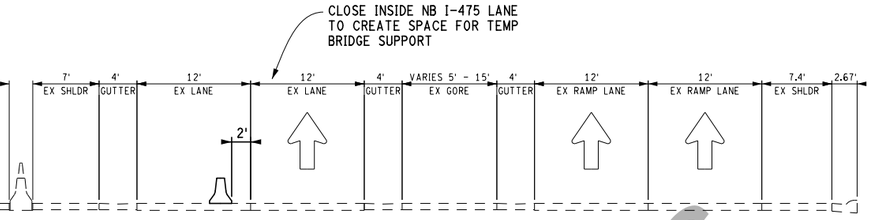

STAGE 2C - I-475 SECTION
TO APPLY:
NB I-475 UNDER E 5TH ST BRIDGE

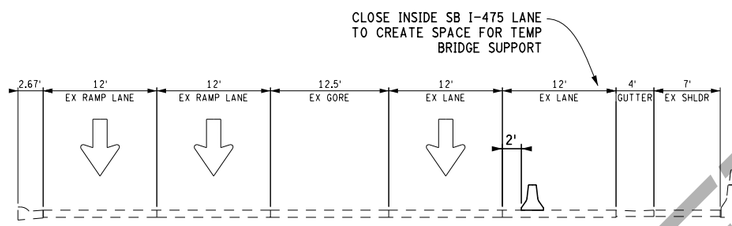

STAGE 2C - I-475 SECTION
TO APPLY:
SB I-475 UNDER E COURT ST BRIDGE

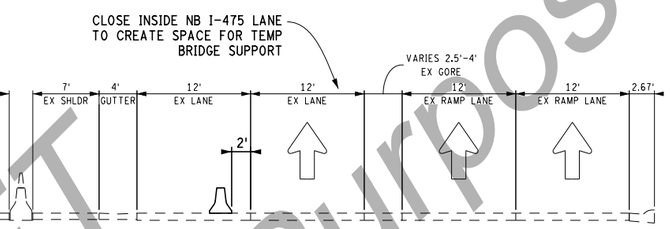

STAGE 2C - I-475 SECTION
TO APPLY:
NB I-475 UNDER E COURT ST BRIDGE

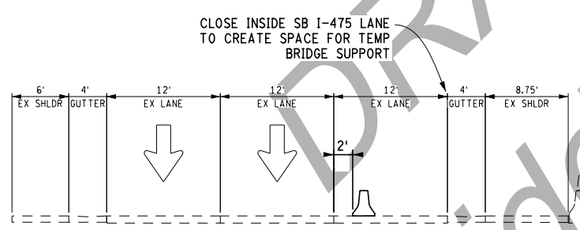

STAGE 2C - I-475 SECTION
TO APPLY:
SB I-475 UNDER E 3RD ST BRIDGE

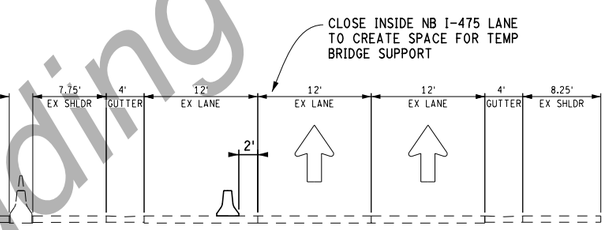

STAGE 2C - I-475 SECTION
TO APPLY:
NB I-475 UNDER E 3RD ST BRIDGE

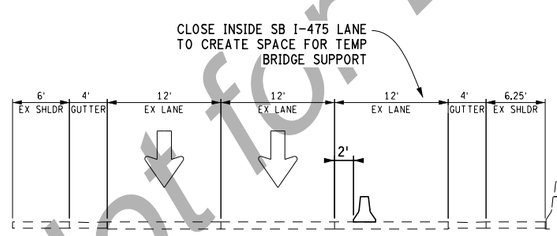

STAGE 2C - I-475 SECTION
TO APPLY:
SB I-475 UNDER E 2ND ST BRIDGE

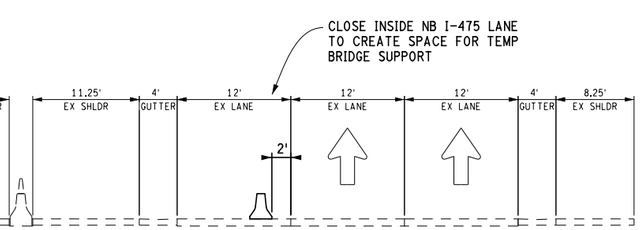

STAGE 2C - I-475 SECTION
TO APPLY:
NB I-475 UNDER E 2ND ST BRIDGE

DRAFT
Not for Bidding Purposes

FINAL ROW PLAN REVISIONS (SUBMITTAL DATE:)							
NO.	DATE	AUTH	DESCRIPTION	NO.	DATE	AUTH	DESCRIPTION

AECOM

MDOT Michigan Department of Transportation

0 HORZ. (FT) 16

FILE: 110535_I475_MTTYP_002.dgn

DATE: 07/27/20
DESIGN UNIT: BLOCK
TSC: DAVISON

CS: 25084, 25107
JN: 132026

MAINTAINING TRAFFIC STAGE TYPICAL CROSS SEC
I-475 BRIDGE WORK TYPICALS
STAGE 2C TYPICALS

DRAWING: I-475 MTTYP 25
SHEET: SECT 1 194

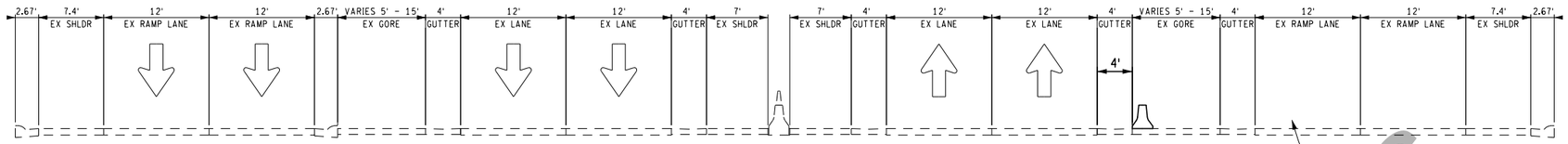

STAGE 3A - I-475 SECTION
TO APPLY:
SB I-475 UNDER E 5TH ST BRIDGE

STAGE 3A - I-475 SECTION
TO APPLY:
NB I-475 UNDER E 5TH ST BRIDGE

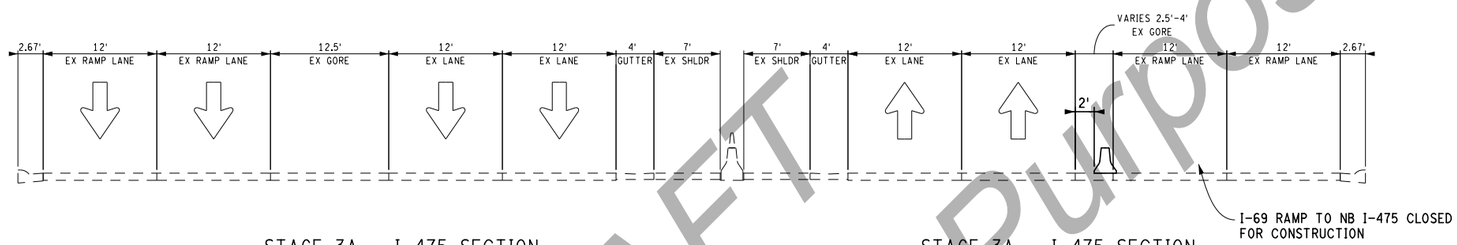

STAGE 3A - I-475 SECTION
TO APPLY:
SB I-475 UNDER E COURT ST BRIDGE

STAGE 3A - I-475 SECTION
TO APPLY:
NB I-475 UNDER E COURT ST BRIDGE

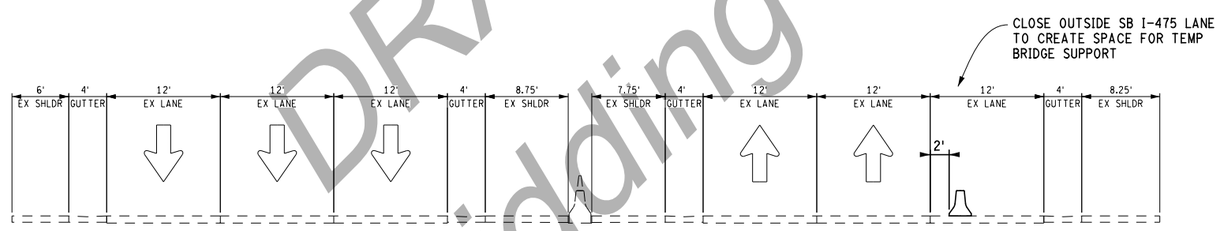

STAGE 3A - I-475 SECTION
TO APPLY:
SB I-475 UNDER E 3RD ST BRIDGE

STAGE 3A - I-475 SECTION
TO APPLY:
NB I-475 UNDER E 3RD ST BRIDGE

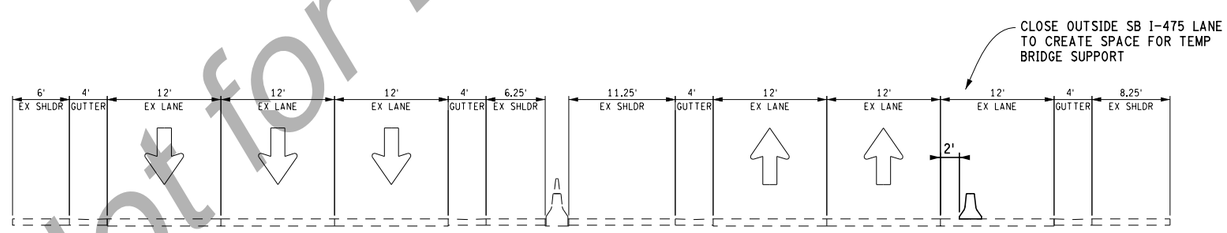

STAGE 3A - I-475 SECTION
TO APPLY:
SB I-475 UNDER E 2ND ST BRIDGE

STAGE 3A - I-475 SECTION
TO APPLY:
NB I-475 UNDER E 2ND ST BRIDGE

DRAFT
Not for Bidding Purposes

FINAL ROW PLAN REVISIONS (SUBMITTAL DATE:)							
NO.	DATE	AUTH	DESCRIPTION	NO.	DATE	AUTH	DESCRIPTION

AECOM

MDOT Michigan Department of Transportation

0 HORZ. (FT) 16

FILE: 110535_I475_MTTYP_003.dgn

DATE: 07/27/20
DESIGN UNIT: BLOCK
TSC: DAVISON

CS: 25084, 25107
JN: 132026

MAINTAINING TRAFFIC STAGE TYPICAL CROSS SEC
I-475 BRIDGE WORK TYPICALS
STAGE 3A TYPICALS

DRAWING: I-475 MTTYP 26
SHEET: SECT 1 195

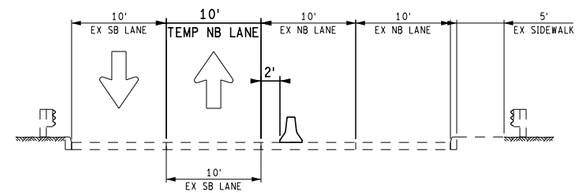

STAGE 2A FENTON RD SECTION

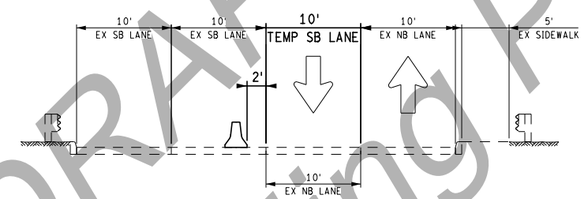

STAGE 2B FENTON RD SECTION

DRAFT
Not for Bidding Purposes

FINAL ROW PLAN REVISIONS (SUBMITTAL DATE:)							
NO.	DATE	AUTH	DESCRIPTION	NO.	DATE	AUTH	DESCRIPTION

AECOM

MDOT Michigan Department of Transportation

0 HORZ. (FT) 16

FILE: 110535_FENTON_MTTYP_001.dgn

DATE: 07/27/20
DESIGN UNIT: BLOCK
TSC: DAVISON

CS: 25084, 25107
JN: 132026

MAINTAINING TRAFFIC STAGE TYPICAL CROSS SEC
FENTON BRIDGE WORK TYPICALS

DRAWING: FENTON MTTYP 27
SHEET: SECT 1

MICHIGAN DEPARTMENT OF TRANSPORTATION

ROUTE: I-69
CITY OF FLINT
GENESEE COUNTY

SECTION	CONTROL SEC	JOB NO.	FED AID PROJ
2	25084, 25085, 25132	201632A	NO
2	25132	204861A	NO

ROAD	YEAR	TRAFFIC DATA ADT	DHV	COMM	SPEED DATA DESIGN	POSTED	LIMITS
SEE ROAD PLANS							

GENERAL NOTES

THE RECONSTRUCTION DECK DESIGN OF S11, S12, S13, S14, S10-3, S10-4 OF 25132 AND PARTIAL DECK REPLACEMENT FOR R01 OF 25084 AND R01 OF 25085 IS BASED ON 1.2 TIMES THE CURRENT AASHTO LRFD BRIDGE DESIGN SPECIFICATION HL-93 LOADING WITH THE EXCEPTION THAT THE DESIGN TANDEM PORTION OF THE HL-93 LOAD DEFINITION SHALL BE REPLACED BY A SINGLE 60 KIP AXLE LOAD BEFORE APPLICATION OF THIS 1.2 FACTOR. THE RESULTING LOAD IS DESIGNATED HL-93 MODIFIED. LIVE LOAD PLUS DYNAMIC LOAD ALLOWANCE. DEFLECTION DOES NOT EXCEED $\frac{1}{800}$ OF SPAN LENGTH AND $\frac{1}{300}$ OF CANTILEVER ARM. THE ORIGINAL STRUCTURES WERE DESIGNED FOR HS20-44 AND ALTERNATE MILITARY LOADING BASED ON AASHTO STANDARD SPECIFICATIONS FOR HIGHWAY BRIDGES.

THE REHABILITATION DESIGN OF ALL OTHER STRUCTURES AND BEAM REPAIRS IS BASED ON THE 17TH EDITION OF THE AASHTO STANDARD SPECIFICATIONS FOR HIGHWAY BRIDGES HS20-44 AND ALTERNATE MILITRAY LOADING. LIVE LOAD PLUS DYNAMIC LOAD ALLOWANCE DEFLECTION DOES NOT EXCEED $\frac{1}{800}$ OF SPAN LENGTH AND $\frac{1}{300}$ OF CANTILEVER ARM FOR S10-5, S10-6, S10-7 OF 25132, R01 OF 25084, AND R01 OF 25085 AND $\frac{1}{1000}$ OF SPAN LENGTH AND $\frac{1}{375}$ OF CANTILEVER ARM FOR S01 OF 25084, S02, S03, S04, AND S05 OF 25085, AND S15, S16, S17, AND S18 OF 25132. THE ORIGINAL STRUCTURES WERE DESIGNED FOR THE HS20-44 LOADING BASED ON AASHTO STANDARD SPECIFICAITONS FOR HIGHWAY BRIDGES.

EXCEPT WHERE OTHERWISE INDICATED ON THESE PLANS, OR IN THE PROPOSAL AND SUPPLEMENTAL SPECIFICATIONS CONTAINED HEREIN, ALL MATERIALS AND WORKMANSHIP SHALL BE ACCORDING TO THE MICHIGAN DEPARTMENT OF TRANSPORTATION STANDARD SPECIFICATIONS FOR CONSTRUCTION 2012 EDITION.

THE DESIGN OF THE STRUCTURAL MEMBERS IS BASED ON MATERIAL OF THE FOLLOWING GRADES AND STRESSES:

CONCRETE: GRADE S2M	f'c= 3,000 psi
CONCRETE: GRADE DM	f'c= 4,000 psi
STEEL REINFORCEMENT (Gr. 60) GRADE 60	fy = 60,000 psi
STEEL REINFORCEMENT (DECK REPLACEMENTS) ASTM 1035CS	fy = 100,000 psi
STRUCTURAL STEEL: AASHTO M270 GRADE 36	Fy = 36,000 psi
STRUCTURAL STEEL: AASHTO M270 GRADE 50	Fy = 50,000 psi

ALL EXPOSED CONCRETE CORNERS SHOWN SQUARE ON THE PLANS SHALL BE BEVELED WITH $\frac{1}{2}$" TRIANGULAR MOLDINGS EXCEPT AS OTHERWISE NOTED.

THE BRIDGE PAINT MAY CONTAIN LEAD.

UNLESS OTHERWISE SHOWN ON THE PLANS PROVIDE MINIMUM CONCRETE CLEAR COVER FOR REINFORCEMENT ACCORDING TO THE FOLLOWING:
CONCRETE CAST AGAINST EARTH: 3 IN.
ALL OTHER UNLESS SHOWN ON PLANS: 2 IN.

THE BRIDGE SURFACES HAVE HMA PATCHES. REMOVAL OF HMA AS A RESULT OF REMOVAL OF OTHER SUPERSTRUCTURE ITEMS SHALL BE INCLUDED IN THE REMOVAL OF THOSE ITEMS.

THIS PROJECT HAS BEEN EVALUATED USING THE FAA NOTICE CRITERIA TOOL FOR THE FOLLOWING STRUCTURE HEIGHTS AND GROUND LEVEL ELEVATIONS. NO PERMITS ARE REQUIRED.

STRUCTURE	HEIGHT	GROUND ELEV.	STRUCTURE	HEIGHT	GROUND ELEV.	STRUCTURE	HEIGHT	GROUND ELEV.
C01 OF 25084	200 FT	760.00	S05 OF 25085	200 FT	753.00	S10-5 OF 25132	200 FT	767.00
R01 OF 25084	200 FT	789.00	S10-3 OF 25132	200 FT	744.00	S10-6 OF 25132	200 FT	767.00
S01 OF 25084	200 FT	761.00	S10-4 OF 25132	200 FT	745.00	S10-7 OF 25132	200 FT	789.00
R01 OF 25085	200 FT	755.00	S11 OF 25132	200 FT	755.00	S15 OF 25132	200 FT	761.00
S02 OF 25085	200 FT	753.00	S12 OF 25132	200 FT	757.00	S16 OF 25132	200 FT	759.00
S03 OF 25085	200 FT	758.00	S13 OF 25132	200 FT	757.00	S17 OF 25132	200 FT	758.00
S04 OF 25085	200 FT	755.00	S14 OF 25132	200 FT	757.00	S18 OF 25132	200 FT	749.00

THE REGULATED WASTE ACTIVITY IDENTIFICATION NUBMERS FOR THIS PROJECT ARE AS FOLLOWS:

CONTROL SECTION	NUMBER	CONTROL SECTION	NUMBER
R01 OF 25084	MIK967748732	S12 OF 25132	MIK386681985
S01 OF 25084	MIR000038612	S13 OF 25132	MIK359215399
R01 OF 25085	MIK671985364	S14 OF 25132	MIK628727182
S02 OF 25085	MIK583371745	S10-5 OF 25132	MIR000034207
S03 OF 25085	MIK893447896	S10-6 OF 25132	MIR000034207
S04 OF 25085	MIK917818692	S10-7 OF 25132	MIR000034207
S05 OF 25085	MIK439114869	S15 OF 25132	MIR000034215
S10-3 OF 25132	MIR000034207	S16 OF 25132	MIR000034231
S10-4 OF 25132	MIR000034207	S17 OF 25132	MIR000034249
S11 OF 25132	MIK744271164	S18 OF 25132	MIR000034256

N

S18 OF 25132
E 2ND ST OVER I-475
STRUCTURE NUMBER: 2668
JN: 201632A

S17 OF 25132
E 3RD ST OVER I-475
STRUCTURE NUMBER: 2667
JN: 201632A

S12 OF 25132
RAMP K OVER RAMP D & G
STRUCTURE NUMBER: 2662
JN: 201632A

S11 OF 25132
RAMP L OVER RAMP A & E
STRUCTURE NUMBER: 2661
JN: 201632A

S05 OF 25085
S SAGINAW ST OVER I-69
STRUCTURE NUMBER: 2608
JN: 201632A

R01 OF 25085
I-69 OVER FENTON RD
STRUCTURE NUMBER: 2602
JN: 201632A

S04 OF 25085
BEACH ST OVER I-69
STRUCTURE NUMBER: 2607
JN: 201632A

S03 OF 25085
CHURCH ST OVER I-69
STRUCTURE NUMBER: 2606
JN: 201632A

S02 OF 25085
GRAND TRAVERSE ST OVER I-69
STRUCTURE NUMBER: 2605
JN: 201632A

S16 OF 25132
E COURT ST OVER I-475
STRUCTURE NUMBER: 2666
JN: 201632A

S15 OF 25132
E 5TH ST OVER I-475
STRUCTURE NUMBER: 2665
JN: 201632A

S14 OF 25132
RAMP I OVER RAMP C & E
STRUCTURE NUMBER: 2664
JN: 201632A

S13 OF 25132
RAMP J OVER RAMP D & H
STRUCTURE NUMBER: 2663
JN: 201632A

R01 OF 25084
I-69 OVER GTW RR
STRUCTURE NUMBER: 2582
JN: 201632A

C01 OF 25084
I-69 OVER ROBINSON DRAIN
STRUCTURE NUMBER: 2578
JN: 201632A

S01 OF 25084
LAPEER RD OVER I-69
STRUCTURE NUMBER: 2585
JN: 201632A

S10 OF 25132-3
I-69 EB OVER I-475 & I-475 RAMPS
STRUCTURE NUMBER: 2656
JN: 201632A

S10 OF 25132-4
I-69 WB OVER I-475 & I-475 RAMPS
STRUCTURE NUMBER: 2657
JN: 201632A

S10 OF 25132-5
RAMP E OVER I-69 & I-475
STRUCTURE NUMBER: 2658
JN: 201632A

S10 OF 25132-6
RAMP F OVER I-69 & I-475
STRUCTURE NUMBER: 2659
JN: 201632A

S10 OF 25132-7
RAMPS G & H OVER
I-69, I-475 & RAMPS E & F
STRUCTURE NUMBER: 2660
JN: 201632A

COUNTY KEY

THESE PLANS WERE PREPARED FOR THE MICHIGAN DEPARTMENT OF TRANSPORTATION BY

BERGMANN
ARCHITECTS ENGINEERS PLANNERS

JEREMY A. HEDDEN, P.E. - PROJECT MANAGER — DATE

BERGMANN
7050 W. SAGINAW HWY
LANSING, MI 48917
(517) 272-9835

APPROVALS

RECOMMENDED FOR APPROVAL BY:

TALIA BELILL , P.E. - PROJECT MANAGER — DATE

KEITH BROWN, P.E. - CONSTRUCTION ENGINEER — DATE

MICHIGAN
DEPARTMENT OF TRANSPORTATION
PAUL C. AJEGBA, P.E. - DIRECTOR

CONTRACT FOR:
DECK REPLACEMENT, EPOXY OVERLAY, DECK PATCHING, SUBSTRUCTURE PATCHING, JOINT REPLACEMENT, BRIDGE APPROACH WORK, BARRIER AND PARTIAL DECK REPLACEMENT, CULVERT CLEANOUT, SCOUR PROTECTON, AND SLOPE PAVING MODIFICATIONS.

DRAFT
Not for Bidding Purposes

FINAL ROW PLAN REVISIONS (SUBMITTAL DATE:)

NO.	DATE	AUTH	DESCRIPTION	NO.	DATE	AUTH	DESCRIPTION

BERGMANN ARCHITECTS ENGINEERS PLANNERS
MDOT Michigan Department of Transportation

NO SCALE

DRAWN BY: BERGMANN	DATE: 07/27/20	CS: 25084, 25085, 25132	TITLE SHEET
CHK'D BY: BERGMANN	DESIGN UNIT: NADJARIAN	JN: 201632A 204861A	
FILE: TITLE_001.dgn	TSC: DAVISON		

DRAWING	SHEET
TITLE 001	SECT 2 1

WORK FLOW CHART

STRUCTURE NO.	LOCATION DESCRIPTION	HIGH FRICTION EPOXY OVLY, WARRANTY	PATCHING (INCL FULL DEPTH)	DECK REPLACEMENT	BRIDGE BARRIER REPLACEMENT	PIN & HANGER REPLACEMENT	REPLACE EXP JOINTS	JOINT DEVICE COVER PLATE	BOLTED BEAM REPAIRS	WELDED BEAM REPAIRS	PARTIAL PAINTING	FULL PAINTING	BEARING REALIGNMENT
JN 201632		DECK REPAIRS							SUPERSTRUCTURE REPAIRS				
R01 OF 25084	I-69 OVER GTW RR	X	X		X	X	X		X		X		X
S01 OF 25084	LAPEER RD OVER I-69	X	X				X	X					
R01 OF 25085	I-69 OVER FENTON RD. AND CSX RR (INACTIVE)	X	X		X	X	X		X	X		X	X
S02 OF 25085	GRAND TRAVERSE STREET OVER I-69	X	X				X	X					
S03 OF 25085	CHURCH STREET OVER I-69	X	X				X	X					
S04 OF 25085	BEACH STREET OVER I-69	X	X				X	X					
S05 OF 25085	S. SAGINAW STREET OVER I-69	X	X				X	X					
S10-5 OF 25132	RAMP E OVER I-69 & I-475	X	X				X						
S10-6 OF 25132	RAMP F OVER I-69 & I-475	X	X				X						
S10-7 OF 25132	RAMP G & H OVER I-69, I-475, & RAMPS E & F	X	X				X						
S15 OF 25132	E. 5TH STREET OVER I-475	X	X				X	X				X	
S16 OF 25132	E. COURT STREET OVER I-475	X	X			X	X	X	X	X		X	X
S17 OF 25132	E. 3RD STREET OVER I-475	X	X				X	X					
S18 OF 25132	E. 2ND STREET OVER I-475	X	X			X	X	X	X	X	X		
C01 OF 25084	I-69 OVER ROBINSON DRAIN												
JN 204861		DECK REPAIRS							SUPERSTRUCTURE REPAIRS				
S10-3 OF 25132	I-69 EB OER I-475			X	X	X	X			X			
S10-4 OF 25132	I-69 WB OVER I-475			X	X	X	X			X			
S11 OF 25132	RAMP L OVER RAMP A/E			X	X		X				X		X
S12 OF 25132	RAMP K OVER RAMP D/G			X	X		X				X		X
S13 OF 25132	RAMP J OVER RAMP D/H			X	X		X					X	X
S14 OF 25132	RAMP I OVER RAMP C/E			X	X		X		X	X		X	X

WORK FLOW CHART CONTINUED

STRUCTURE NO.	LOCATION DESCRIPTION	PED FENCING	LAT BRACING REM AND CIF REPAIRS	INSTALL METAL MESH PANELS	SUBSTRUCTURE REPAIRS	HORIZ. SURFACE SEALER	SLOPE PAVING REPAIRS	TEMP SUPPORTS	APPROACHES (SEE ROAD PLANS)	MOT (SEE ROAD PLANS)	CONC SURFACE COATING	CULVERT CLEANOUT	RIPRAP
JN 201632		SUPERSTRUCTURE REPAIRS CONT.			SUBSTRUCTURE REPAIRS			GENERAL REPAIRS AND APPROACH WORK					
R01 OF 25084	I-69 OVER GTW RR				X		X	X	X	X-OVERS	X		
S01 OF 25084	LAPEER RD OVER I-69	X		X	X			X		DETOUR	X		
R01 OF 25085	I-69 OVER FENTON RD. AND CSX RR (INACTIVE)		X	X	X		X	X	X	X-OVERS	X		
S02 OF 25085	GRAND TRAVERSE STREET OVER I-69	X		X	X			X		DETOUR	X		
S03 OF 25085	CHURCH STREET OVER I-69	X		X	X			X		DETOUR	X		
S04 OF 25085	BEACH STREET OVER I-69	X		X	X			X		DETOUR	X		
S05 OF 25085	S. SAGINAW STREET OVER I-69	X		X	X			X		DETOUR	X		
S10-5 OF 25132	RAMP E OVER I-69 & I-475		X	X	X				X	DETOUR	X		
S10-6 OF 25132	RAMP F OVER I-69 & I-475		X	X	X				X	DETOUR	X		
S10-7 OF 25132	RAMP G & H OVER I-69, I-475, & RAMPS E & F		X	X	X				X	DETOUR	X		
S15 OF 25132	E. 5TH STREET OVER I-475	X		X	X			X	X	DETOUR	X		
S16 OF 25132	E. COURT STREET OVER I-475	X		X	X			X	X	DETOUR	X		
S17 OF 25132	E. 3RD STREET OVER I-475	X		X	X				X	DETOUR	X		
S18 OF 25132	E. 2ND STREET OVER I-475	X		X	X			X	X	DETOUR	X		
C01 OF 25084	I-69 OVER ROBINSON DRAIN				X					X-OVERS		X	X
JN 204861		SUPERSTRUCTURE REPAIRS CONT.			SUBSTRUCTURE REPAIRS			GENERAL REPAIRS AND APPROACH WORK					
S10-3 OF 25132	I-69 EB OVER I-475				X		X	X	X	X-OVERS	X		
S10-4 OF 25132	I-69 WB OVER I-475				X		X	X	X	X-OVERS	X		
S11 OF 25132	RAMP L OVER RAMP A/E		X		X	X	X	X	X	DETOUR	X		
S12 OF 25132	RAMP K OVER RAMP D/G				X	X	X	X	X	DETOUR	X		
S13 OF 25132	RAMP J OVER RAMP D/H		X		X	X	X	X	X	DETOUR	X		
S14 OF 25132	RAMP I OVER RAMP C/E		X		X	X	X	X	X	DETOUR	X		

DRAFT
Not for Bidding Purposes