# Road & Bridge Design Publications

Monthly Update – July 2022

Revisions for the month of **July** are listed and displayed below and will be included in projects submitted for the **November** letting.

E-mail road related questions to MDOT-Road-Design-Standards@michigan.gov.
E-mail bridge related questions to MDOT-Bridge-Design-Standards@michigan.gov.

## Special Details

R-67-G: Guardrail Anchorage, Bridge, Details: Revised the titles of the details on sheets four, five, & six to specify use on railings with expansion at end walls or sleeper slabs.

R-67-SD: Guardrail Anchorage, Bridge, Details for existing bridge barrier railings: Revised the title of the detail on sheet three to specify use on railings with expansion at end walls or sleeper slabs.

EJ3AE & EJ4R: Updated details for sleeper slab with curb & gutter. Added details for sleeper slab railing endwall and railing endwall extension. These details are used when the railing continues onto the bridge approach slab and ends at the sleeper slab. See Bridge Design Guide 6.20.05 and 6.20.05 A for additional details of railing endwall and extension. Continue to use EJ3AC and EJ4P with 2012 Standard Specifications projects.

## Road Design Manual

Appendix 6-A: Revised the outside shoulder subbase cross slope from 2% towards the roadway to 2% away.

Chapter 9: Utilities: Modified the chapter to comply with the Michigan Department of the Environment, Great Lakes, and Energy (EGLE) regulations governing lead service lines. Updated the text to current practices based on commission policies and guidance documents. Also provided editorial improvements.

14.26: Distribution of Preliminary Plans to Utilities and Utility Coordination Meeting: Revised section to coincide with the updates to Chapter 9

## Bridge Design Manual

8.09.07.E: Modified the plan note to reinforce the need for Contractors to submit alternate temporary supports for review and approval whenever plan dimensions, plan details, or materials used in the temporary support change from what is called for in the plans.

Chapter 12 Table of Contents: Added new section (12.08.09) for rocker alignment.

# Road & Bridge Design Publications

Monthly Update – July 2022

12.08.09: A new section to provide an objective process based on field measurements and inspection observations to determine when there is an unacceptable risk that the continued movement of the bearing could result in the rocker falling over and it is necessary to realign the bearings. The information included in this section is based on good industry practice and has been verified by MDOT to be acceptable based on finite element modeling of standard bearings.

## Bridge Design Guide

Table of Contents: Deleted Guide 6.20.04C. Information moved to Guide 6.20.05. Added Guides 6.20.05 & .05 A, new guides for sleeper slab.

6.20.03A: Added weep holes on approach side of stub of sleeper slab and updated reference to sleeper slab details. Additional weep holes will aid in removing water from E3 joint.

6.20.03B: Detailed guardrail post location for approaches. Clarified EA bars in deck and sliding slab. Also updated reference to sleeper slab details.

6.20.04B: Detailed guardrail post location for approaches. Detailed bridge railing endwall extension. Updated reference to sleeper slab details. Added weep holes on approach side of stub of sleeper slab.

6.20.04C: Guide is deleted, and information is transferred to new Guide 6.20.05.

6.20.05: New Guide for sleeper slab. Including the addition of weep holes on both sides of stub and details for sleeper slab with an endwall extension when railing ends at the sleeper slab expansion joint.

6.20.05A: New Guide for sleeper slab and details for sleeper slab with an endwall extension when railing ends at the sleeper slab expansion joint.

Updates to the MDOT Cell Library, Sample Plans, and other automated tools may be required in tandem with some of this month's updates. Until such updates can be made, it is the designer's/detailer's responsibility to manually incorporate any necessary revisions to notes and plan details to reflect these revisions.

# Index to Special Details

**7-25-2022**

⑥

| SPECIAL DETAIL NUMBER | NUMBER OF SHEETS | TITLE | CURRENT DATE |
|---|---|---|---|
| 21 | 2 | GUARDRAIL AT INTERSECTIONS | 6-6-22 |
| 24 | 8 | GUARDRAIL ANCHORED IN BACKSLOPE TYPES 4B, 4T, & 4MGS-8 | 9-28-18 |
| 99 | 2 | CHAIN LINK FENCE WITH WIRE ROPE | 9-22-14 |
| R-32-F | 8 | APPROACH CURB & GUTTER DOWNSPOUTS | 3-31-22 |
| R-32-SD | 6 | APPROACH CURB & GUTTER DOWNSPOUTS (FOR EXISTING RAILINGS) | 3-31-22 |
| R-43-J | 2 | LOCATION OF TRANSVERSE JOINTS IN PLAIN CONCRETE PAVEMENT | 1-4-22 |
| R-45-K | 2 | PAVEMENT REINFORCEMENT FOR BRIDGE APPROACH | 1-4-22 |
| R-53-A | 22 | TEMPORARY CONCRETE BARRIER LIMITED DEFLECTION | 8-14-15 |
| R-56-F | 6 | GUARDRAIL MEDIAN OBJECT PROTECTION | 2-5-19 |
| R-60-J | 17 | GUARDRAIL TYPES A, B, BD, T, TD, MGS-8, & MGS-8D | 12-3-21 |
| R-62-H | 4 | GUARDRAIL APPROACH TERMINAL TYPE 2M | 6-16-22 |
| R-63-C | 16 | GUARDRAIL APPROACH TERMINAL TYPES 3B & 3T | 2-5-19 |
| R-66-E | 4 | GUARDRAIL DEPARTING TERMINAL TYPES B, T, & MGS | 9-28-18 |
| *R-67-G | 16 | GUARDRAIL ANCHORAGE, BRIDGE, DETAILS | 7-20-22 |
| *R-67-SD | 7 | GUARDRAIL ANCHORAGE, BRIDGE, DETAILS (FOR EXISTING RAILINGS) | 7-20-22 |
| R-72-D | 6 | GUARDRAIL LONG SPAN INSTALLATIONS | 3-4-20 |
| R-73-F | 3 | GUARDRAIL OVER BOX OR SLAB CULVERTS | 8-1-19 |
| R-80-F | 8 | GRANULAR BLANKETS, UNDERDRAINS, OUTLET ENDINGS, & BULKHEADS | 6-28-21 |
| R-100-I | 4 | SEEDING AND TREE PLANTING | 8-3-21 |
| R-110-B | 3 | PAVEMENT SAFETY EDGE | 6-14-21 |
| R-112-J | 9 | SHOULDER AND CENTER LINE CORRUGATIONS | 5-13-21 |
| R-126-I | 5 | PLACEMENT OF TEMPORARY CONCRETE & STEEL BARRIER | 8-25-15 |

*** Denotes New or Revised Special Detail to be included in projects for (beginning with) the November letting.**

Notes: Former Standard Plans IV-87, IV-89, IV-90, and IV-91 Series, used for building cast-in-place concrete head walls for elliptical and circular pipe culverts, are now being replaced with plans that detail each specific size. The Bureau of Bridges & Structures, Structure Design Section, Special Structures Unit will provide special details for inclusion in construction plans for MDOT jobs. To assure prompt delivery, requests ***must* be made in advance.** Contact: MDOT-TriezenbergSquad@michigan.gov

Former Standard Plans IV-93 and IV-94 series have been replaced with precast concrete box & three-sided culverts as per the 2020 Standard Specifications for Construction.

# Index to Bridge Detail Sheets

**7-25-2022**

⑦

| DETAIL NUMBER | NUMBER OF SHEETS | TITLE | CURRENT DATE |
|---|---|---|---|
| B-28-A | 7 | BRIDGE BARRIER RAILING, TYPE 7 | 8-24-20 |
| B-29-A | 8 | BRIDGE BARRIER RAILING, TYPE 6 | 8-24-20 |
| *EJ3AE | 1 to 4 | EXPANSION JOINT DETAILS (See Notes) | 7-25-22 |
| *EJ4R | 1 to 4 | EXPANSION JOINT DETAILS (See Notes) | 7-25-22 |
| PC-1M | 1 | PRESTRESSED CONCRETE I-BEAM DETAILS (See Notes) | 8-23-17 |
| PC-2H | 1 | 70" PRESTRESSED CONCRETE I-BEAM DETAILS (See Notes) | 8-23-17 |
| PC-4F | 1 | PRESTRESSED CONCRETE 1800 BEAM DETAILS (See Notes) | 8-23-17 |

*** Denotes New or Revised Special Detail to be included in projects for (beginning with) the November letting.**

Notes: Details EJ3AE & EJ4R are interactive, i.e., designers and detailers choose details based upon railing type and angle of crossing and fill in the project specific dimensions for the end plate. Place all details appropriate for the project (including the end plate), structure specific information, and the Expansion Joint Device quantity on the sheet. Add the sheet to the plans as a normal plan sheet. Call out and designate the location of the expansion joint device and the end plate on the Superstructure Sheet in the plan set.

Details PC-1M, PC-2H, and PC-4F shall have structure specific information and quantities added to the sheet. The sheet shall then be added to the plans as a normal plan sheet.

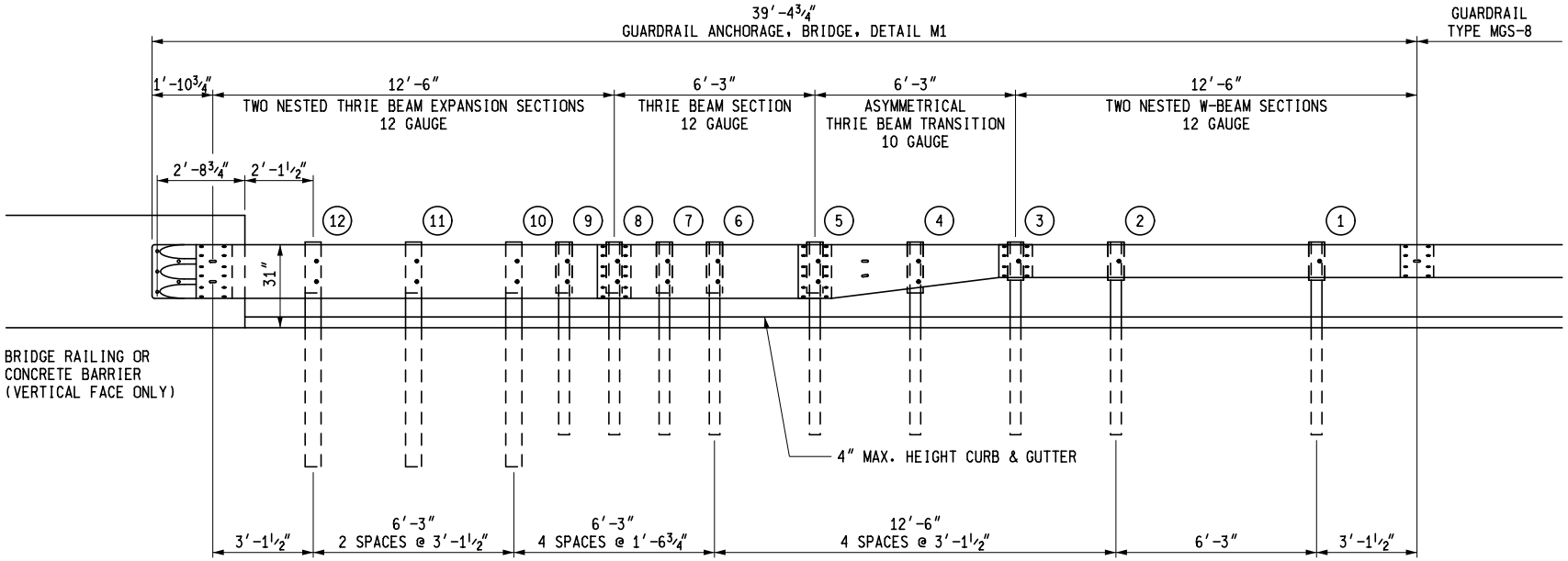


POST 1 THROUGH 9 - W6 x 9 OR W6 x 8.5 POST (6′-0″ LONG) WITH 12″ OFFSET BLOCK
POST 10 THROUGH 12 - W6 x 15 POST (7′-0″ LONG) WITH 12″ OFFSET BLOCK

# DETAILS FOR CONNECTING GUARDRAIL TYPE MGS-8 TO 2-TUBE, 4-TUBE, AESTHETIC PARAPET TUBE, 3 TUBE WITH PICKETS, CONCRETE BLOCK RETROFIT, TYPE 6*, TYPE 7*, OR SINGLE FACE CONCRETE BARRIER* (WITHOUT EXPANSION AT BACKWALL)

* BARRIER ENDING MUST TRANSITION FROM SINGLE-SLOPE TO VERTICAL FACE IN ADVANCE OF END SHOE. ATTACHMENT TO VERTICAL FACE IS REQUIRED.

MICHIGAN DEPARTMENT OF TRANSPORTATION
BUREAU OF DEVELOPMENT STANDARD PLAN FOR

## GUARDRAIL ANCHORAGE, BRIDGE, DETAILS

R-67-G

SHEET 1 OF 16

7-20-2022
PLAN DATE

F.H.W.A. APPROVAL

APPROVED BY: DIRECTOR, BUREAU OF DEVELOPMENT

APPROVED BY: DIRECTOR, BUREAU OF FIELD SERVICES

DEPARTMENT DIRECTOR
Paul C. Ajegba

PREPARED BY DESIGN DIVISION

DRAWN BY: B.L.T.
CHECKED BY: W.K.P.

MDOT Michigan Department of Transportation

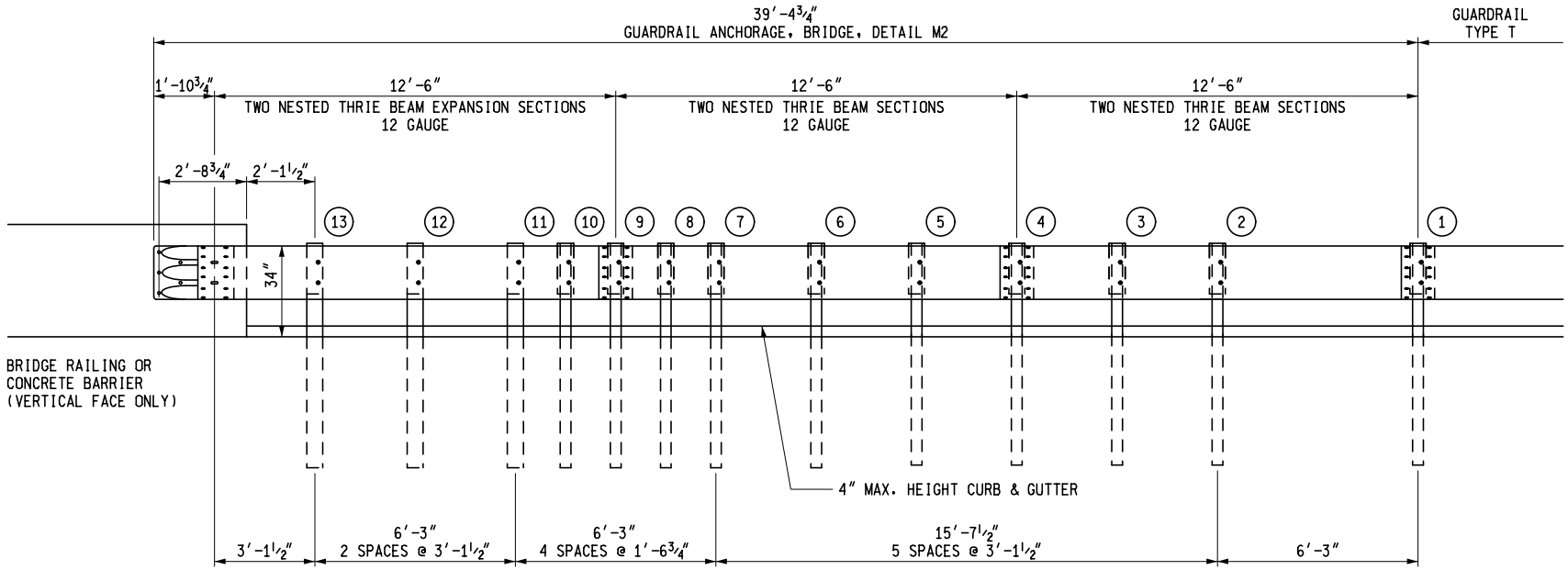


POST 1 THROUGH 10 - W6 x 9 OR W6 x 8.5 POST (7′-0″ LONG) WITH 12″ OFFSET BLOCK
POST 11 THROUGH 13 - W6 x 15 POST (7′-0″ LONG) WITH 12″ OFFSET BLOCK

# DETAILS FOR CONNECTING GUARDRAIL TYPE T TO 2-TUBE, 4-TUBE, AESTHETIC PARAPET TUBE, 3 TUBE WITH PICKETS, CONCRETE BLOCK RETROFIT, TYPE 6*, TYPE 7*, OR SINGLE FACE CONCRETE BARRIER* (WITHOUT EXPANSION AT BACKWALL)

* BARRIER ENDING MUST TRANSITION FROM SINGLE-SLOPE TO VERTICAL FACE IN ADVANCE OF END SHOE. ATTACHMENT TO VERTICAL FACE IS REQUIRED.

MICHIGAN DEPARTMENT OF TRANSPORTATION
BUREAU OF DEVELOPMENT STANDARD PLAN FOR

GUARDRAIL ANCHORAGE, BRIDGE, DETAILS

F.H.W.A. APPROVAL

7-20-2022
PLAN DATE

R-67-G

SHEET 2 OF 16

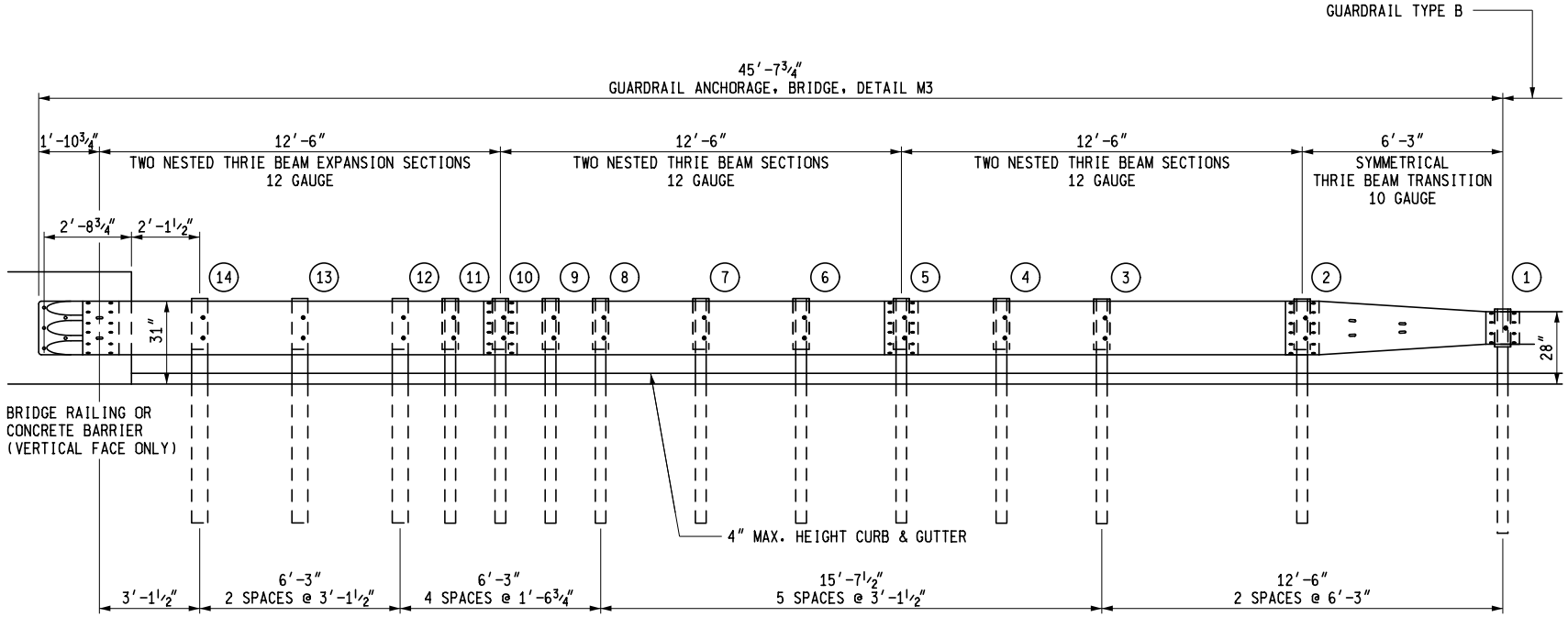


POST 1 THROUGH 11 - W6 x 9 OR W6 x 8.5 POST (7′-0″ LONG) WITH 12″ OFFSET BLOCK
POST 12 THROUGH 14 - W6 x 15 POST (7′-0″ LONG) WITH 12″ OFFSET BLOCK

# DETAILS FOR CONNECTING GUARDRAIL TYPE B TO 2-TUBE, 4-TUBE, AESTHETIC PARAPET TUBE, 3 TUBE WITH PICKETS, CONCRETE BLOCK RETROFIT, TYPE 6*, TYPE 7*, OR SINGLE FACE CONCRETE BARRIER* (WITHOUT EXPANSION AT BACKWALL)

* BARRIER ENDING MUST TRANSITION FROM SINGLE-SLOPE TO VERTICAL FACE IN ADVANCE OF END SHOE. ATTACHMENT TO VERTICAL FACE IS REQUIRED.

MICHIGAN DEPARTMENT OF TRANSPORTATION
BUREAU OF DEVELOPMENT STANDARD PLAN FOR

GUARDRAIL ANCHORAGE, BRIDGE, DETAILS

F.H.W.A. APPROVAL

7-20-2022
PLAN DATE

R-67-G

SHEET 3 OF 16

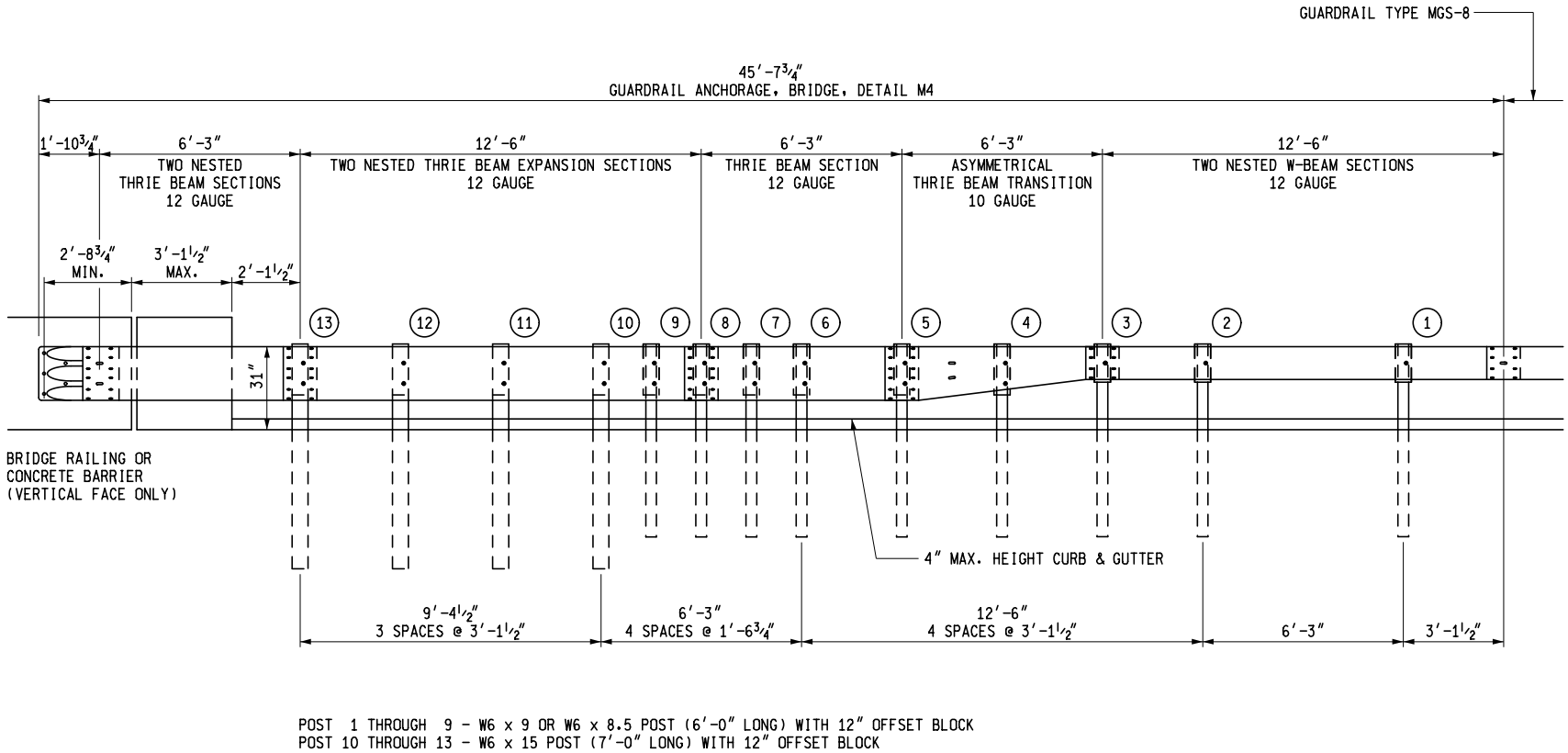


POST 1 THROUGH 9 - W6 x 9 OR W6 x 8.5 POST (6′-0″ LONG) WITH 12″ OFFSET BLOCK
POST 10 THROUGH 13 - W6 x 15 POST (7′-0″ LONG) WITH 12″ OFFSET BLOCK

# DETAILS FOR CONNECTING GUARDRAIL TYPE MGS-8 TO 2-TUBE, 4-TUBE, AESTHETIC PARAPET TUBE, 3 TUBE WITH PICKETS, CONCRETE BLOCK RETROFIT, TYPE 6*, TYPE 7*, OR SINGLE FACE CONCRETE BARRIER*

(WITH EXPANSION AT BACKWALL/END WALL OR SLEEPER SLAB)

* BARRIER ENDING MUST TRANSITION FROM SINGLE-SLOPE TO VERTICAL FACE IN ADVANCE OF END SHOE. ATTACHMENT TO VERTICAL FACE IS REQUIRED.

MICHIGAN DEPARTMENT OF TRANSPORTATION
BUREAU OF DEVELOPMENT STANDARD PLAN FOR

GUARDRAIL ANCHORAGE, BRIDGE, DETAILS

F.H.W.A. APPROVAL

7-20-2022
PLAN DATE

R-67-G

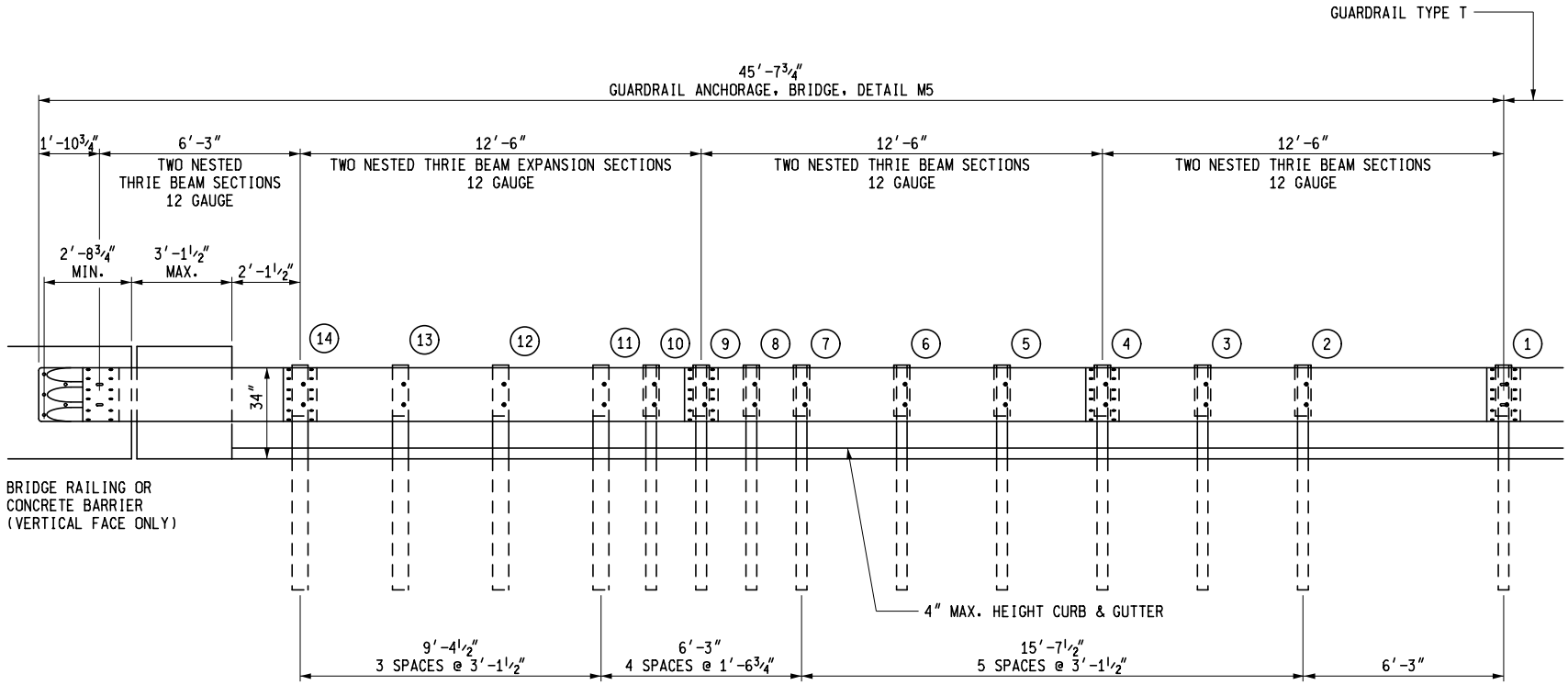


POST 1 THROUGH 10 - W6 x 9 OR W6 x 8.5 POST (7′-0″ LONG) WITH 12″ OFFSET BLOCK
POST 11 THROUGH 14 - W6 x 15 POST (7′-0″ LONG) WITH 12″ OFFSET BLOCK

# DETAILS FOR CONNECTING GUARDRAIL TYPE T TO 2-TUBE, 4-TUBE, AESTHETIC PARAPET TUBE, 3 TUBE WITH PICKETS, CONCRETE BLOCK RETROFIT, TYPE 6*, TYPE 7*, OR SINGLE FACE CONCRETE BARRIER*

(WITH EXPANSION AT BACKWALL/END WALL OR SLEEPER SLAB)

* BARRIER ENDING MUST TRANSITION FROM SINGLE-SLOPE TO VERTICAL FACE IN ADVANCE OF END SHOE. ATTACHMENT TO VERTICAL FACE IS REQUIRED.

MICHIGAN DEPARTMENT OF TRANSPORTATION
BUREAU OF DEVELOPMENT STANDARD PLAN FOR

GUARDRAIL ANCHORAGE, BRIDGE, DETAILS

F.H.W.A. APPROVAL

7-20-2022
PLAN DATE

R-67-G

SHEET 5 OF 16

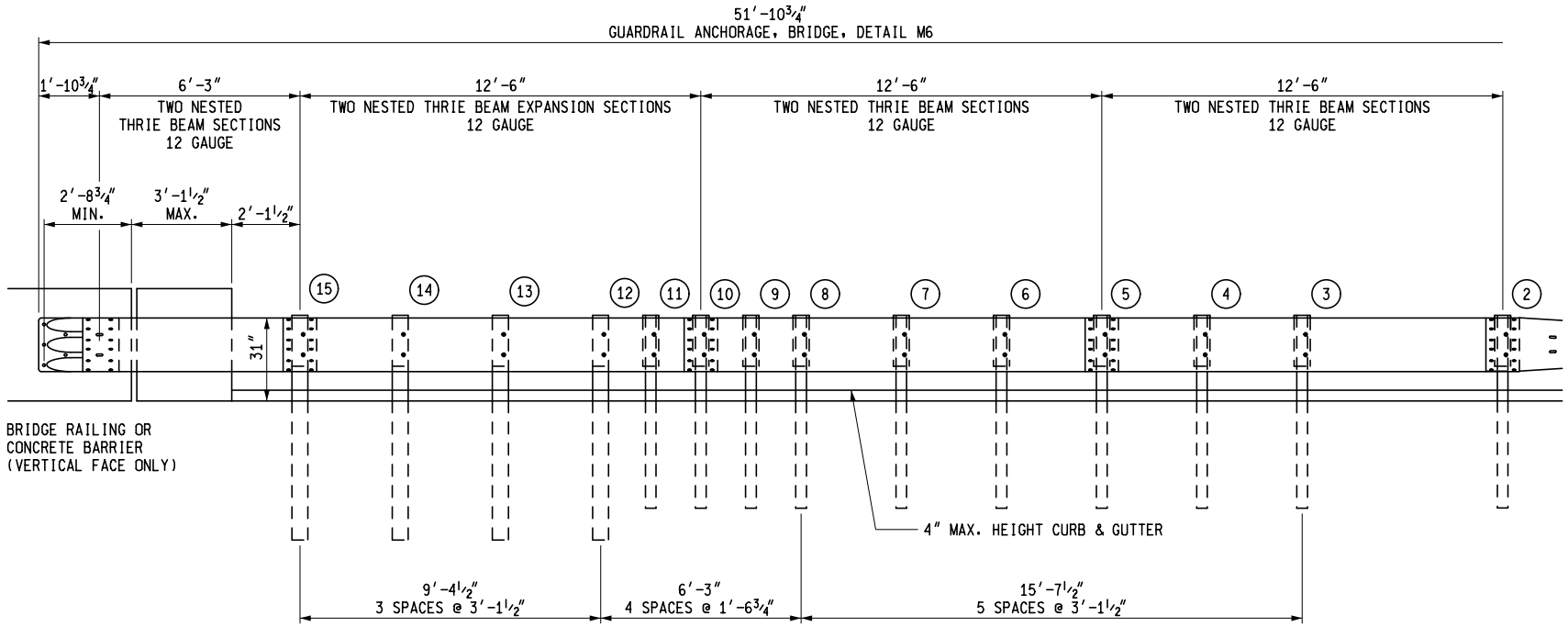


POST 1 THROUGH 11 - W6 x 9 OR W6 x 8.5 POST (6′-0″ LONG) WITH 12″ OFFSET BLOCK
POST 12 THROUGH 15 - W6 x 15 POST (7′-0″ LONG) WITH 12″ OFFSET BLOCK

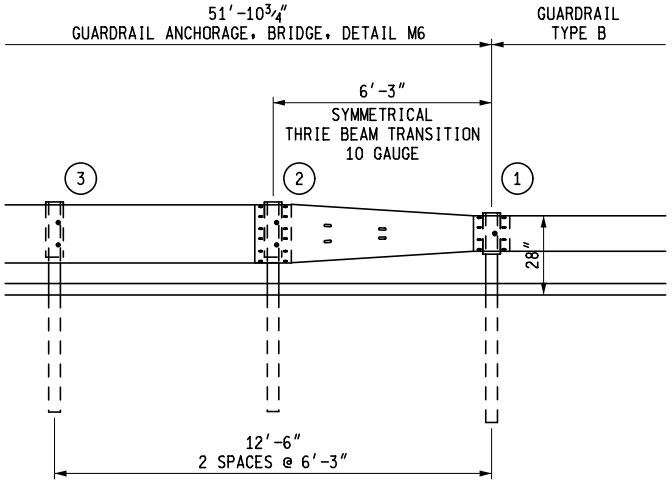


# DETAILS FOR CONNECTING GUARDRAIL TYPE B TO 2-TUBE, 4-TUBE, AESTHETIC PARAPET TUBE, 3 TUBE WITH PICKETS, CONCRETE BLOCK RETROFIT, TYPE 6*, TYPE 7*, OR SINGLE FACE CONCRETE BARRIER*

(WITH EXPANSION AT BACKWALL/END WALL OR SLEEPER SLAB)

* BARRIER ENDING MUST TRANSITION FROM SINGLE-SLOPE TO VERTICAL FACE IN ADVANCE OF END SHOE. ATTACHMENT TO VERTICAL FACE IS REQUIRED.

MICHIGAN DEPARTMENT OF TRANSPORTATION
BUREAU OF DEVELOPMENT STANDARD PLAN FOR

GUARDRAIL ANCHORAGE, BRIDGE, DETAILS

F.H.W.A. APPROVAL

7-20-2022
PLAN DATE

R-67-G

SHEET 6 OF 16

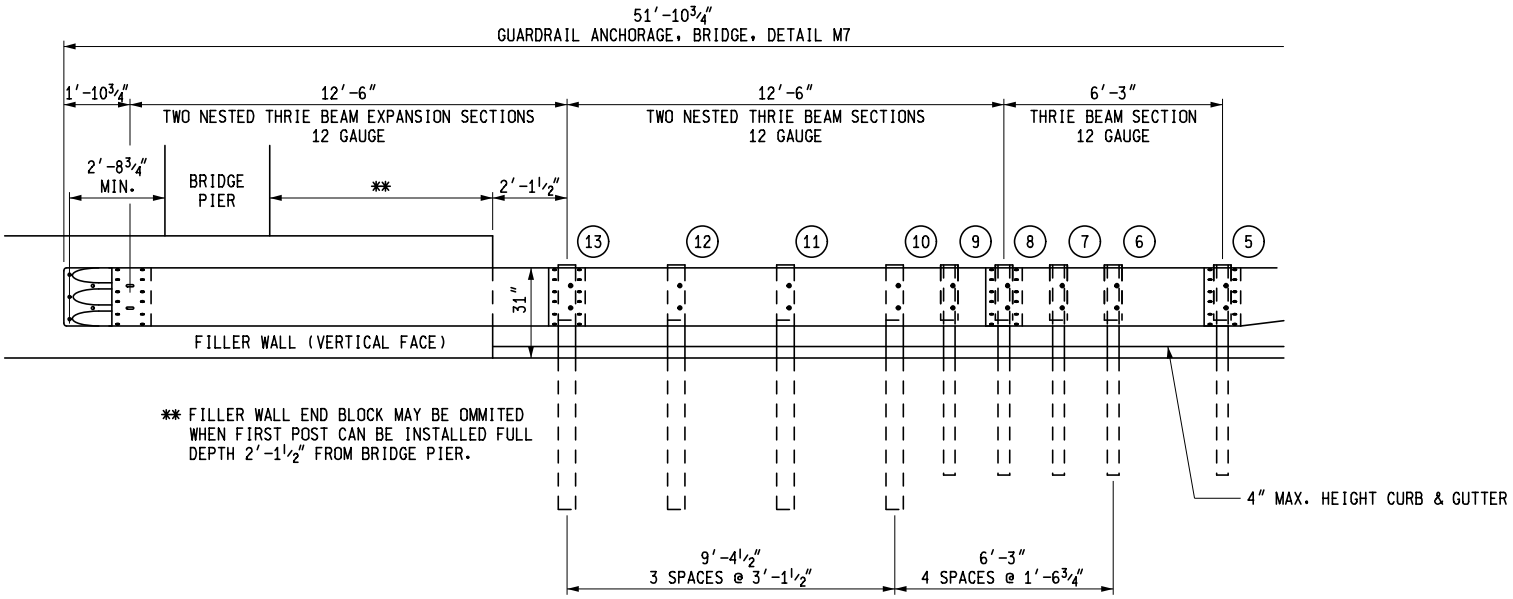


POST 1 THROUGH 9 - W6 x 9 OR W6 x 8.5 POST (6′-0″ LONG) WITH 12″ OFFSET BLOCK
POST 10 THROUGH 13 - W6 x 15 POST (7′-0″ LONG) WITH 12″ OFFSET BLOCK

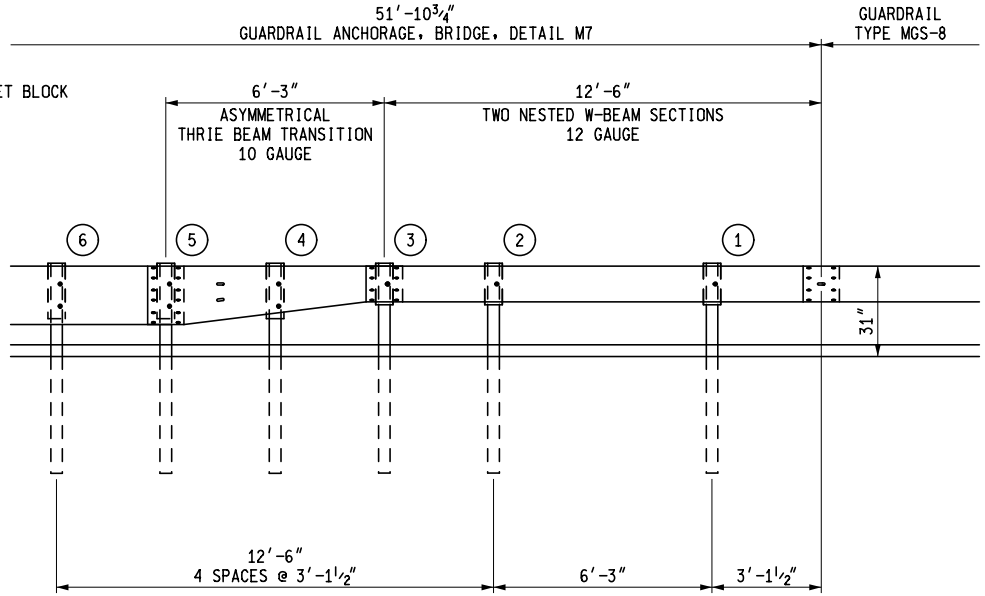


DETAILS FOR CONNECTING GUARDRAIL TYPE MGS-8 TO FILLER WALL

MICHIGAN DEPARTMENT OF TRANSPORTATION
BUREAU OF DEVELOPMENT STANDARD PLAN FOR

# GUARDRAIL ANCHORAGE, BRIDGE, DETAILS

| F.H.W.A. APPROVAL | 7-20-2022 PLAN DATE | R-67-G | SHEET 7 OF 16 |
|---|---|---|---|

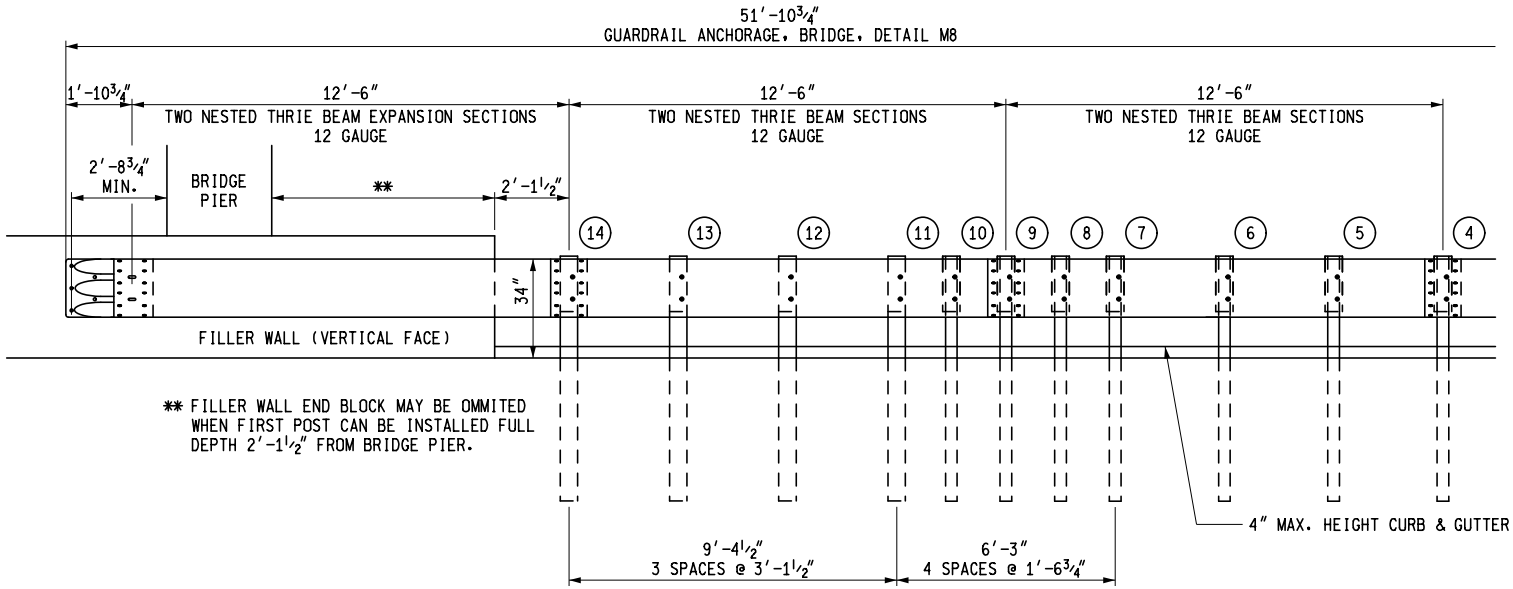


POST 0 THROUGH 10 - W6 x 9 OR W6 x 8.5 POST (7′-0″ LONG) WITH 12″ OFFSET BLOCK
POST 11 THROUGH 14 - W6 x 15 POST (7′-0″ LONG) WITH 12″ OFFSET BLOCK

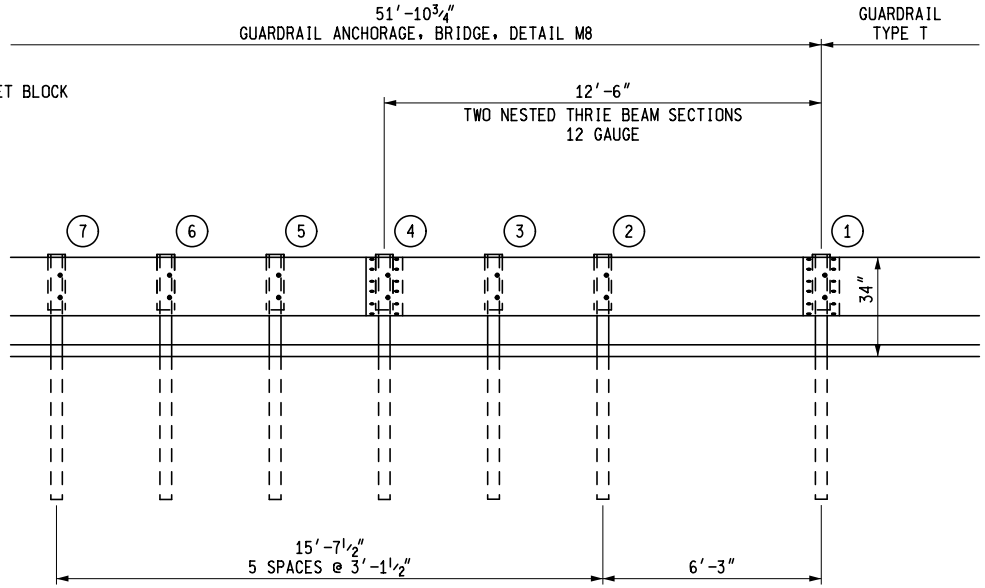


DETAILS FOR CONNECTING GUARDRAIL TYPE T TO FILLER WALL

MICHIGAN DEPARTMENT OF TRANSPORTATION
BUREAU OF DEVELOPMENT STANDARD PLAN FOR

# GUARDRAIL ANCHORAGE, BRIDGE, DETAILS

| F.H.W.A. APPROVAL | 7-20-2022 PLAN DATE | R-67-G | SHEET 8 OF 16 |
|---|---|---|---|

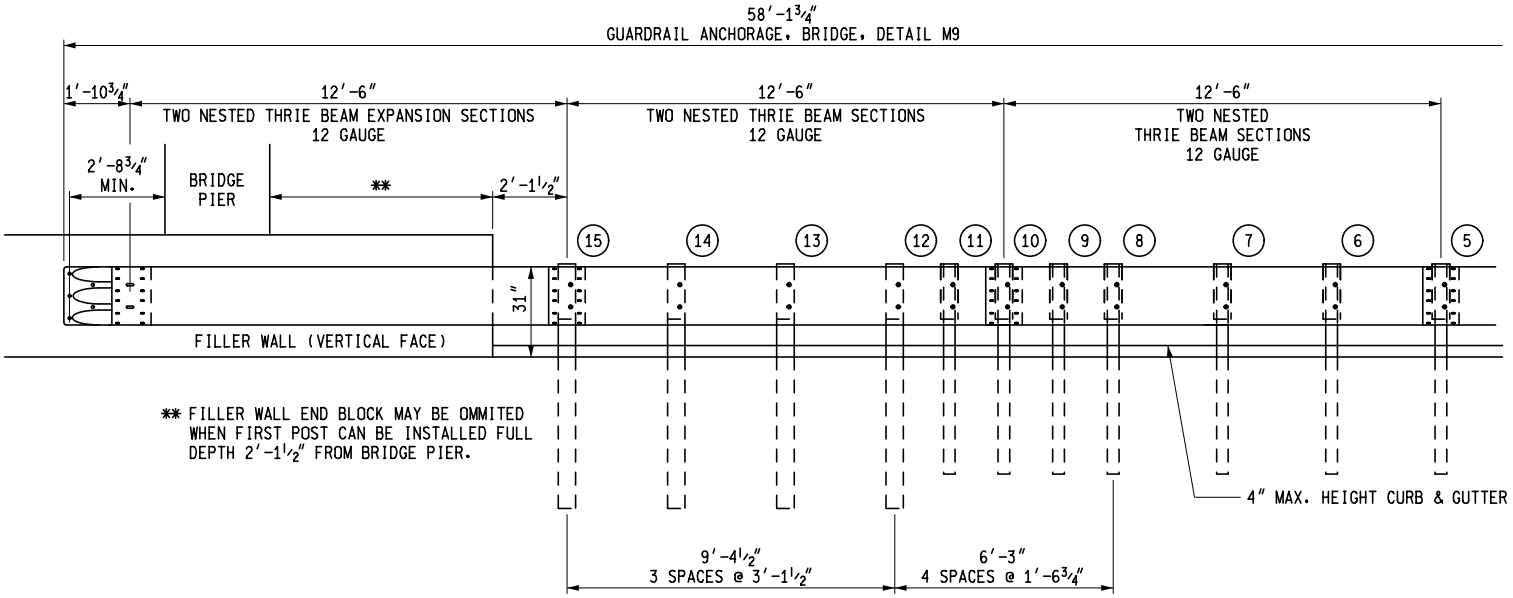


POST 1 THROUGH 11 - W6 x 9 OR W6 x 8.5 POST (6′-0″ LONG) WITH 12″ OFFSET BLOCK
POST 12 THROUGH 15 - W6 x 15 POST (7′-0″ LONG) WITH 12″ OFFSET BLOCK

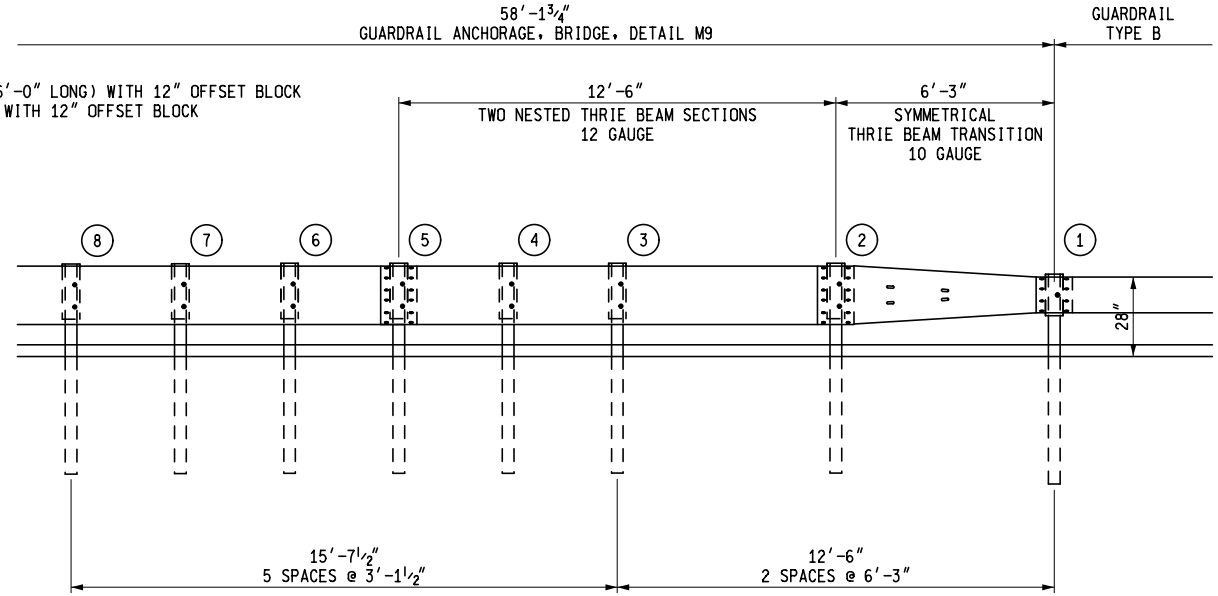


DETAILS FOR CONNECTING GUARDRAIL TYPE B TO FILLER WALL

MICHIGAN DEPARTMENT OF TRANSPORTATION
BUREAU OF DEVELOPMENT STANDARD PLAN FOR

# GUARDRAIL ANCHORAGE, BRIDGE, DETAILS

| F.H.W.A. APPROVAL | 7-20-2022 PLAN DATE | R-67-G | SHEET 9 OF 16 |
|---|---|---|---|

REFER TO GUARDRAIL ANCHORAGE BRIDGE, DETAIL M1 THROUGH M9 FOR GUARDRAIL HEIGHT.

HIGH STRENGTH 7/8" DIA. HEX HEAD BOLT AND NUTS SHALL BE USED TO CONNECT GUARDRAIL TO BRIDGE RAILINGS WITH ROUND WASHERS ON FRONT AND SQUARE WASHERS ON BACK. (SEE CHART BELOW FOR LENGTHS AND NUMBER REQUIRED.) WASHER DETAILS ARE SHOWN ON SHEET 11.

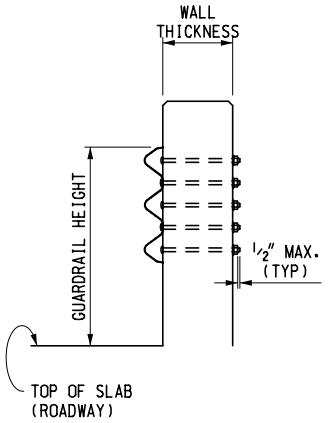


BRIDGE RAILING & FILLER WALL

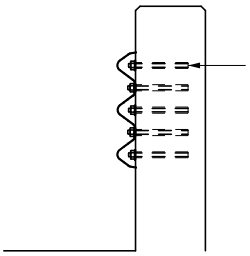

** THE USE OF 7/8" DIA. ADHESIVE ANCHORED BOLTS EMBEDDED 8" TO ATTACH GUARDRAIL TO FILLER WALLS WILL BE ALLOWED, INSTEAD OF BOLTING THROUGH THE FILLER WALL, IN THE FOLLOWING LOCATIONS:

1. AT OR NEAR THE JOINT LINE WHEN A FILLER WALL IS A DIFFERENT THICKNESS THAN THE FILLER WALL EXTENSION
2. IN EXISTING FILLER WALLS THICKER THAN 1'-6"
3. WHEN CONDITIONS PROHIBIT THE USE OF BOLTS

FILLER WALL
ALTERNATE CONSTRUCTION METHOD

APPLICABLE ONLY TO FILLER WALLS

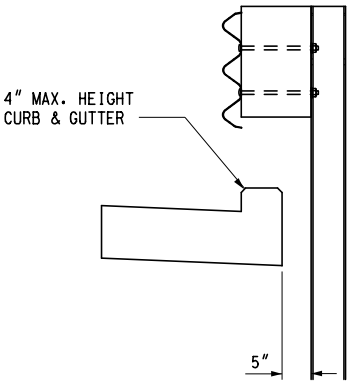


POST DETAIL

| BOLT REQUIREMENTS FOR CONNECTING GUARDRAIL TO BRIDGE RAILINGS | | | |
|---|---|---|---|
| BRIDGE RAILING | WALL THICKNESS | BOLT LENGTH | MINIMUM THREAD LENGTH |
| 2 TUBE | 1'-5 1/2" | 1'-7 1/2" | 4" |
| 4 TUBE | 1'-7" | 1'-9" | 4" |
| AESTHETIC PARAPET TUBE | 1'-0" | 1'-2" | 4" |
| 3 TUBE WITH PICKETS | 1'-4 1/2" | 1'-6 1/2" | 4" |
| TYPE 6 | 1'-5 3/4"/1'-6 3/4" *** | 1'-7 3/4"/1'-8 3/4" *** | 4" |
| TYPE 7 | 1'-2 1/2"/1'-3 1/2" *** | 1'-4 1/2"/1'-5 1/2" *** | 4" |
| CONCRETE BLOCK RETROFIT | 1'-3 3/4" | 1'-5 3/4" | 4" |
| ** FILLER WALL | VARIES | WALL THK + 2" | 4" |
| SHORTER BOLT LENGTHS MAY BE USED PROVIDED THE BOLT EXTENDS 1/4" BEYOND THE NUT WHEN TIGHTENED. *** THICKNESS/LENGTH DEPENDENT UPON AESTHETIC TREATMENT ON RAILING | | | |

GUARDRAIL POST SECTIONS FOR
GUARDRAIL ANCHORAGE, BRIDGE, DETAIL M1 THROUGH M9

MICHIGAN DEPARTMENT OF TRANSPORTATION
BUREAU OF DEVELOPMENT STANDARD PLAN FOR

# GUARDRAIL ANCHORAGE, BRIDGE, DETAILS

| F.H.W.A. APPROVAL | 7-20-2022 PLAN DATE | R-67-G | SHEET 10 OF 16 |
|---|---|---|---|

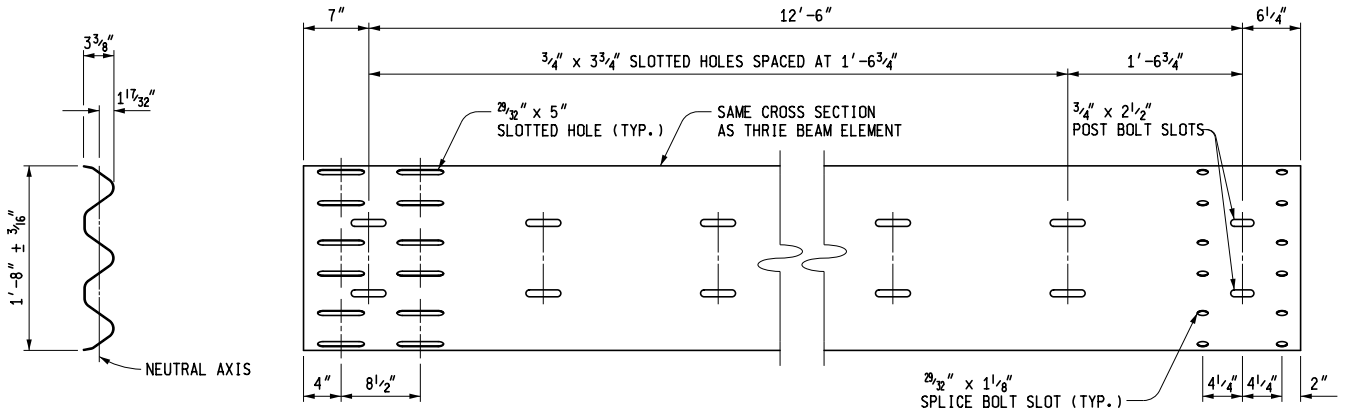


## THRIE BEAM EXPANSION SECTION

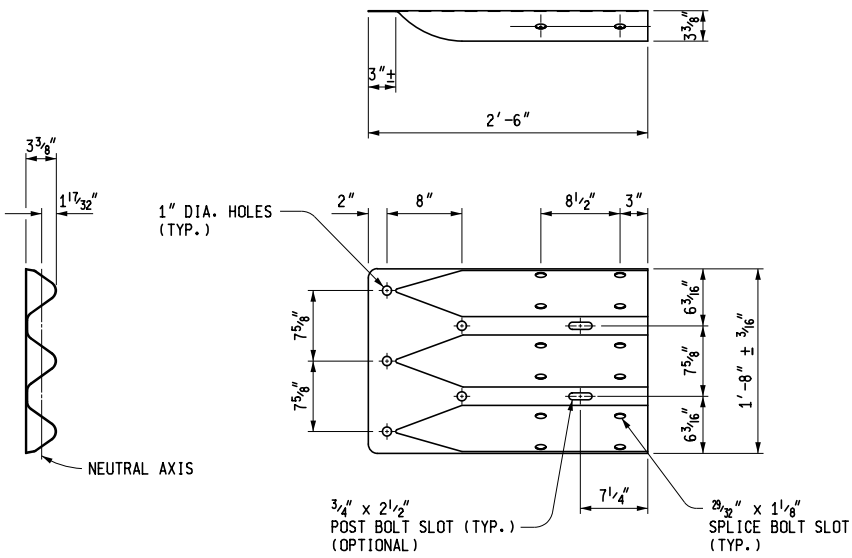


## THRIE BEAM TERMINAL CONNECTOR

BOLT LOCATIONS SHOWN APPLY TO DETAILS M7, M8 AND M9.
REFER TO SHEET 15 FOR BOLT LOCATIONS FOR DETAILS M1, M2, M3, M4, M5 AND M6.

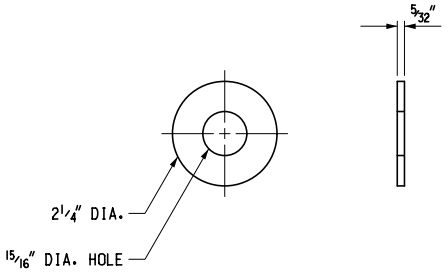


## ROUND WASHER FOR 7/8" DIA. BOLTS

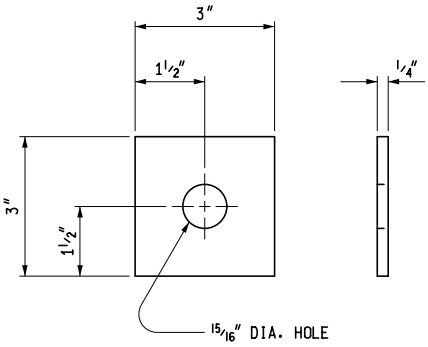


## SQUARE WASHER FOR 7/8" DIA. BOLTS

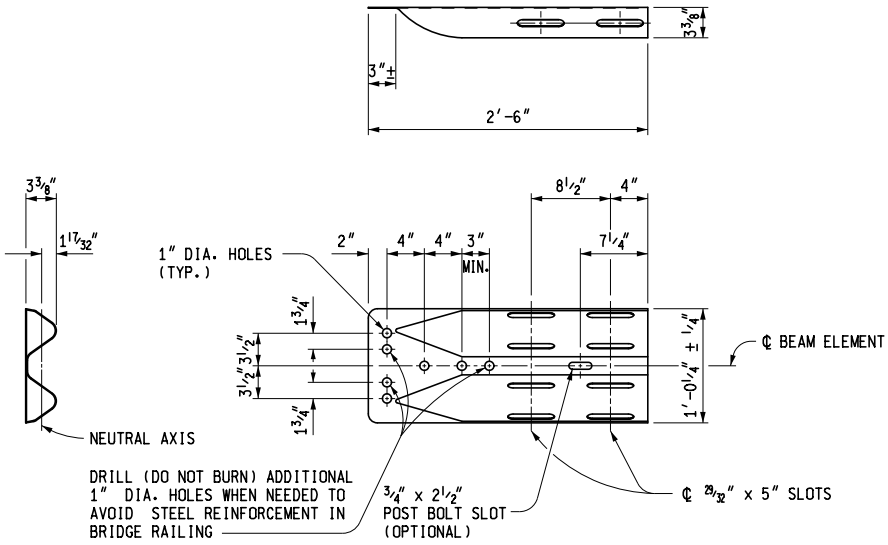


## SPECIAL END SHOE

MICHIGAN DEPARTMENT OF TRANSPORTATION
BUREAU OF DEVELOPMENT STANDARD PLAN FOR

# GUARDRAIL ANCHORAGE, BRIDGE, DETAILS

| F.H.W.A. APPROVAL | 7-20-2022 PLAN DATE | R-67-G | SHEET 11 OF 16 |
|---|---|---|---|

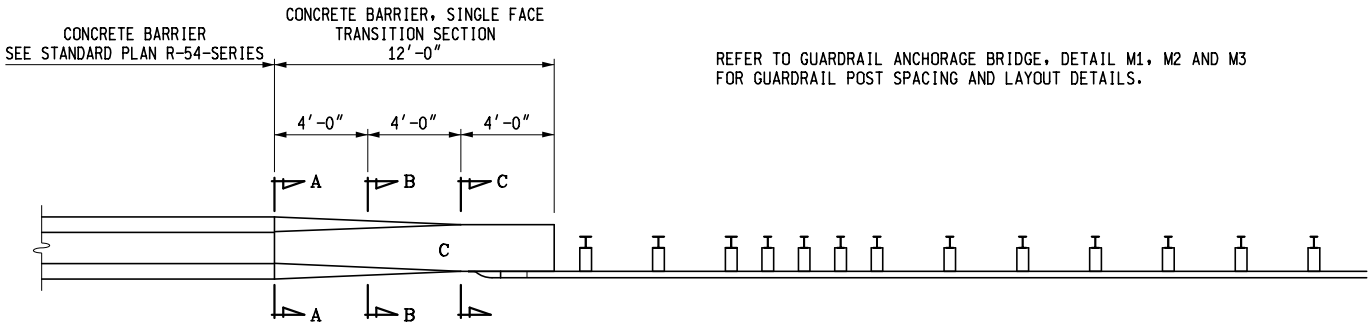


REFER TO GUARDRAIL ANCHORAGE BRIDGE, DETAIL M1, M2 AND M3 FOR GUARDRAIL POST SPACING AND LAYOUT DETAILS.

PLAN VIEW

* REFER TO GUARDRAIL ANCHORAGE BRIDGE, DETAIL M1, M2, AND M3 FOR GUARDRAIL HEIGHT.

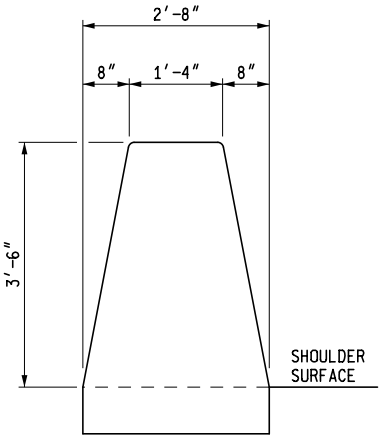


SECTION A-A

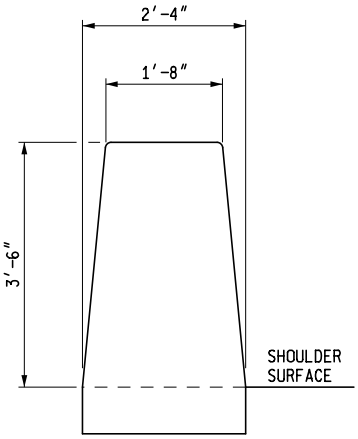


SECTION B-B

UNIFORMLY TRANSITION THE BARRIER FACES FROM SINGLE SLOPE SHAPE TO VERTICAL WALL

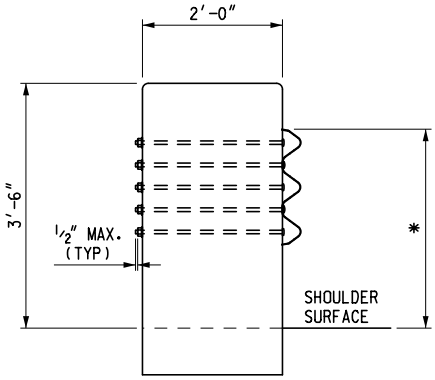


SECTION C-C

HIGH STRENGTH 7/8" DIAMETER x 26" LONG HEX HEAD BOLTS WITH 2" MINIMUM THREAD LENGTH AND NUTS WITH ROUND WASHERS FRONT AND BACK SHALL BE USED TO CONNECT GUARDRAIL TO CONCRETE BARRIER, SINGLE FACE TRANSITION SECTION.

DETAILS FOR CONNECTING GUARDRAIL TO CONCRETE BARRIER, SINGLE FACE

MICHIGAN DEPARTMENT OF TRANSPORTATION
BUREAU OF DEVELOPMENT STANDARD PLAN FOR

# GUARDRAIL ANCHORAGE, BRIDGE, DETAILS

| F.H.W.A. APPROVAL | 7-20-2022 PLAN DATE | R-67-G | SHEET 12 OF 16 |
|---|---|---|---|

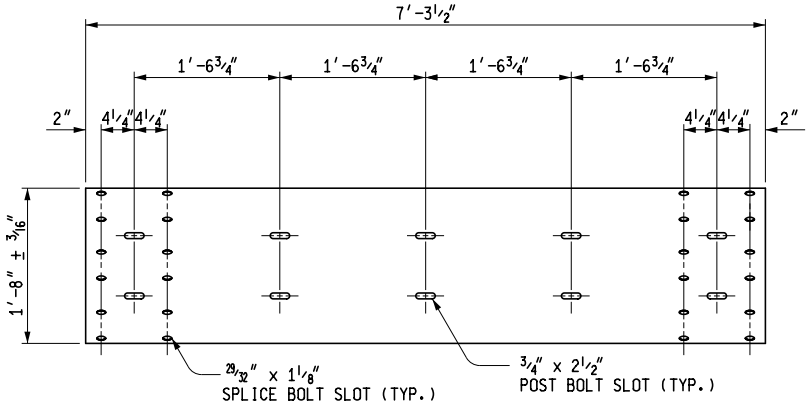


6'-3" THRIE BEAM SECTION

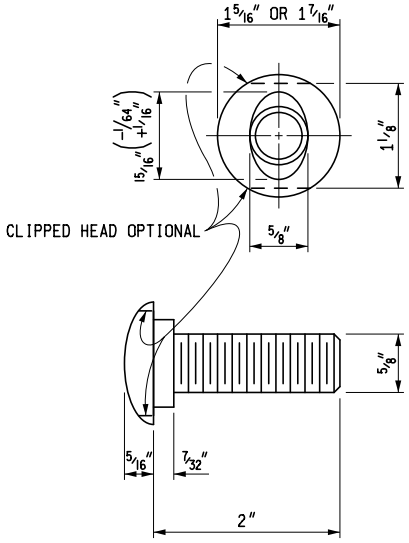


SPLICE BOLT
FOR USE WITH NESTED GUARDRAIL BEAM ELEMENTS

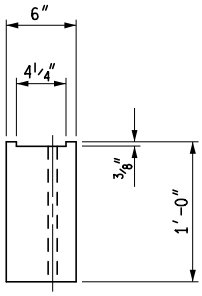


TOP

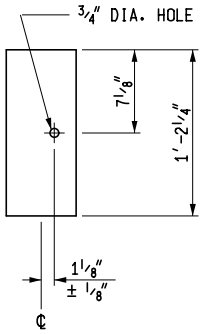


FRONT

OFFSET BLOCK FOR W BEAM GUARDRAIL

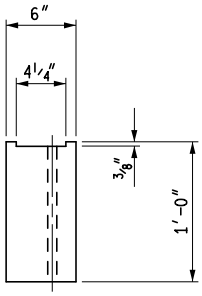


TOP

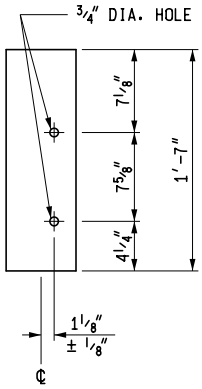


FRONT

OFFSET BLOCK FOR THRIE BEAM GUARDRAIL
FOR USE WITH W6 x 8.5 OR W6 x 9 POSTS

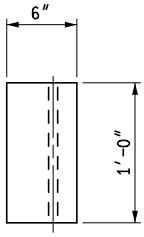


TOP

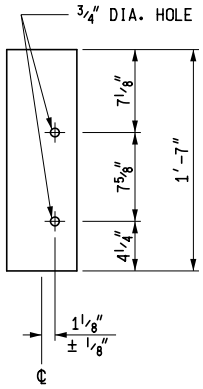


FRONT

OFFSET BLOCK FOR THRIE BEAM GUARDRAIL
FOR USE WITH W6 x 15 POSTS

MICHIGAN DEPARTMENT OF TRANSPORTATION
BUREAU OF DEVELOPMENT STANDARD PLAN FOR

# GUARDRAIL ANCHORAGE, BRIDGE, DETAILS

| F.H.W.A. APPROVAL | 7-20-2022 PLAN DATE | R-67-G | SHEET 13 OF 16 |
|---|---|---|---|

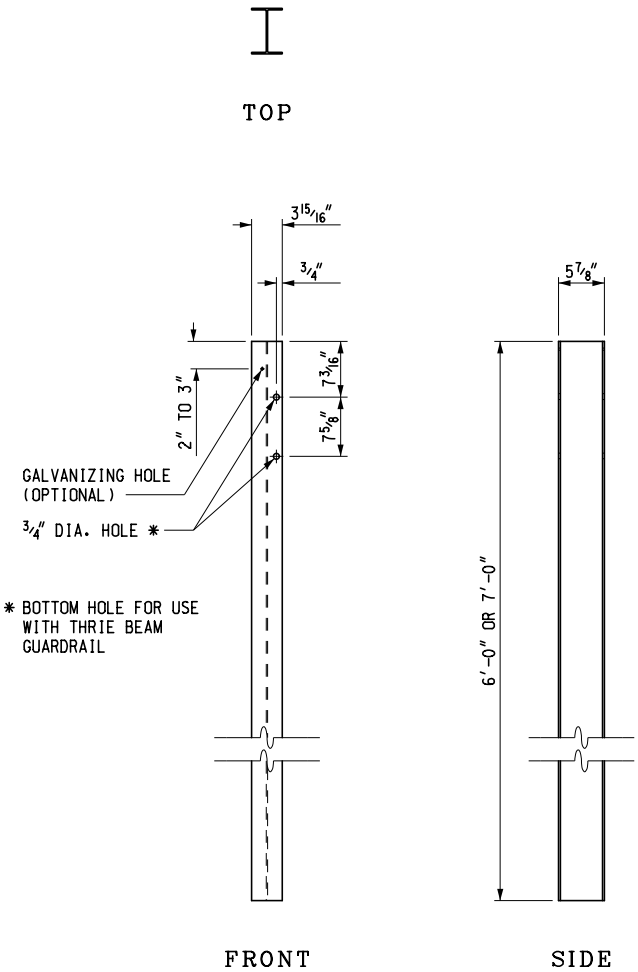


W6 x 9 OR
W6 x 8.5 POST

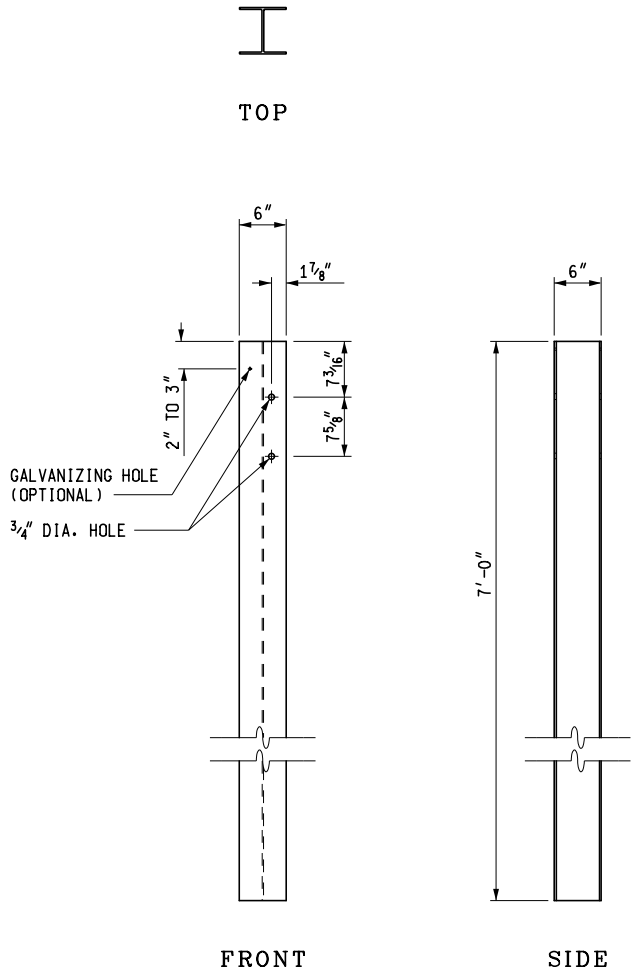


W6 x 15 POST

MICHIGAN DEPARTMENT OF TRANSPORTATION
BUREAU OF DEVELOPMENT STANDARD PLAN FOR

# GUARDRAIL ANCHORAGE, BRIDGE, DETAILS

| F.H.W.A. APPROVAL | 7-20-2022 PLAN DATE | R-67-G | SHEET 14 OF 16 |
|---|---|---|---|

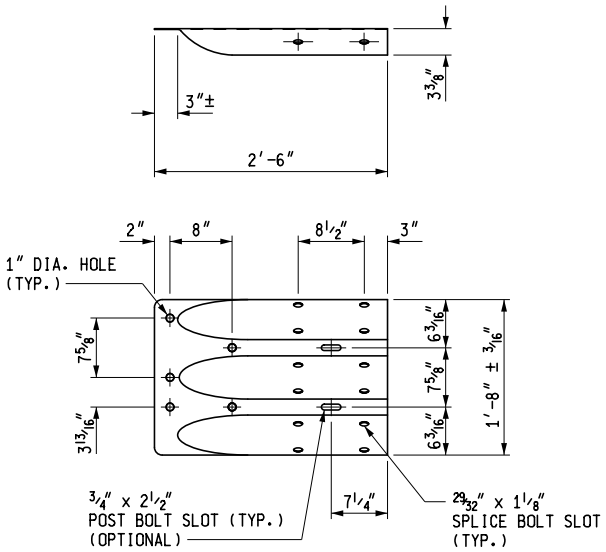


THRIE BEAM TERMINAL CONNECTOR
BOLT LOCATION FOR
GUARDRAIL ANCHORAGE TYPE M1, M3, M4, M6

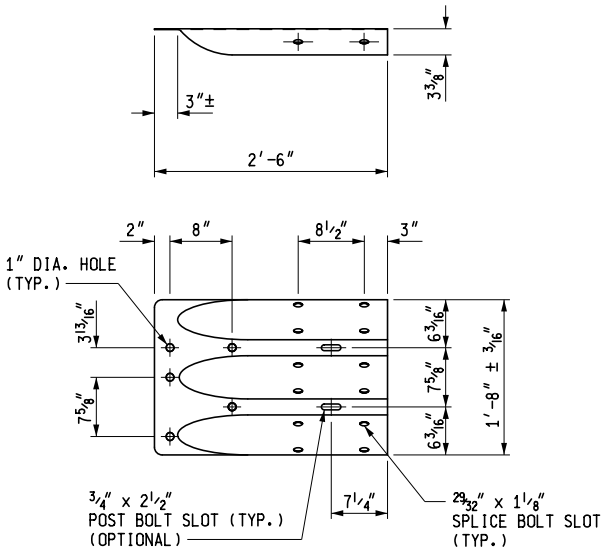


THRIE BEAM TERMINAL CONNECTOR
BOLT LOCATION FOR
GUARDRAIL ANCHORAGE TYPE M2, M5

MICHIGAN DEPARTMENT OF TRANSPORTATION
BUREAU OF DEVELOPMENT STANDARD PLAN FOR

# GUARDRAIL ANCHORAGE, BRIDGE, DETAILS

| F.H.W.A. APPROVAL | 7-20-2022 PLAN DATE | R-67-G | SHEET 15 OF 16 |
|---|---|---|---|

NOTES:

ALL POSTS, OFFSET BLOCKS, BEAM ELEMENTS, REFLECTORS, AND HARDWARE, (INCLUDING BOLTS, NUTS, AND WASHERS) SHALL CONFORM TO THE CURRENT STANDARD SPECIFICATIONS AND TO THE CURRENT STANDARD PLAN R-60-SERIES, WHERE APPLICABLE, EXCEPT AS SPECIFIED ON THIS STANDARD.

BEAM ELEMENTS IDENTIFIED AS 12 GAUGE MUST MEET CLASS A REQUIREMENTS PER AASHTO M 180. BEAM ELEMENTS IDENTIFIED AS 10 GAUGE MUST MEET CLASS B REQUIREMENTS PER AASHTO M 180.

THE THRIE BEAM TERMINAL CONNECTOR AND SPECIAL END SHOE SHALL BE THE SAME MATERIAL AS ADJACENT RUN OF GUARDRAIL, AND SHALL NOT BE LIGHTER THAN 10 GAUGE (0.138").

SECTIONS OF THE THRIE BEAM ELEMENT REQUIRED TO BE TWISTED FOR USE IN ANCHORAGE SHALL BE FIELD BENT.

GUARDRAIL BEAM ELEMENTS SHALL BE LAPPED IN THE DIRECTION OF TRAFFIC, EXCEPT FOR THE THRIE BEAM TERMINAL CONNECTOR WHICH MAY BE LAPPED IN EITHER DIRECTION.

SPLICE BOLTS SHALL BE USED WHEN SPLICING THE THRIE BEAM TERMINAL CONNECTOR TO THE THRIE BEAM EXPANSION SECTION AND WHEN SPLICING THE SPECIAL END SHOE TO THE TRANSITION SECTION. THE SPLICE BOLT NUT SHALL BE INSTALLED FINGER-TIGHT AND SHALL FULLY ENGAGE THE SPLICE BOLT WITH A MINIMUM OF ONE THREAD EXTENDING BEYOND THE NUT. THIS SHALL BE FOLLOWED UP BY UPSETTING THE FIRST THREAD ON THE OUTSIDE OF THE NUT WITH A CENTER PUNCH OR COLD CHISEL, SO THAT IT WILL NOT LOOSEN.

SEE THE CURRENT STANDARD PLAN R-32-SERIES FOR APPROACH CURB AND GUTTER AND DOWNSPOUT HEADER.

SEE APPROPRIATE PLANS TO DETERMINE WHETHER GUARDRAIL ANCHORAGE, BRIDGE SPANS A BRIDGE EXPANSION JOINT.

SEE THE CURRENT STANDARD PLAN R-55-SERIES FOR FILLER WALLS AND FILLER WALL END BLOCK.

SEE STANDARD PLAN R-54-SERIES FOR "CONCRETE BARRIER, SINGLE FACE, TYPE __".

CONCRETE BARRIER, SINGLE FACE TRANSITION SECTION SHALL BE INCLUDED IN THE PAY ITEM "CONCRETE BARRIER, SINGLE FACE, TYPE __".

MICHIGAN DEPARTMENT OF TRANSPORTATION
BUREAU OF DEVELOPMENT STANDARD PLAN FOR

# GUARDRAIL ANCHORAGE, BRIDGE, DETAILS

| F.H.W.A. APPROVAL | 7-20-2022<br>PLAN DATE | R-67-G | SHEET<br>16 OF 16 |
|---|---|---|---|

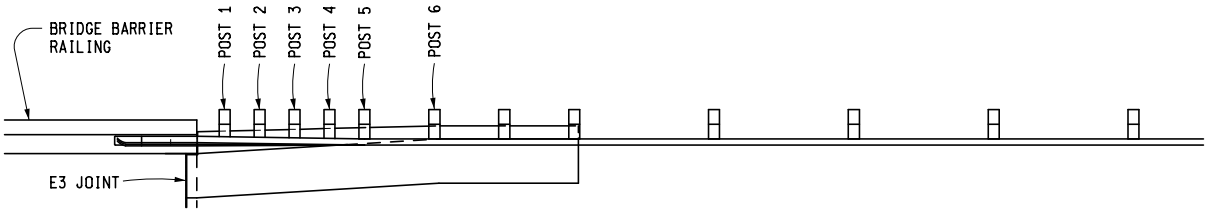


PLAN VIEW

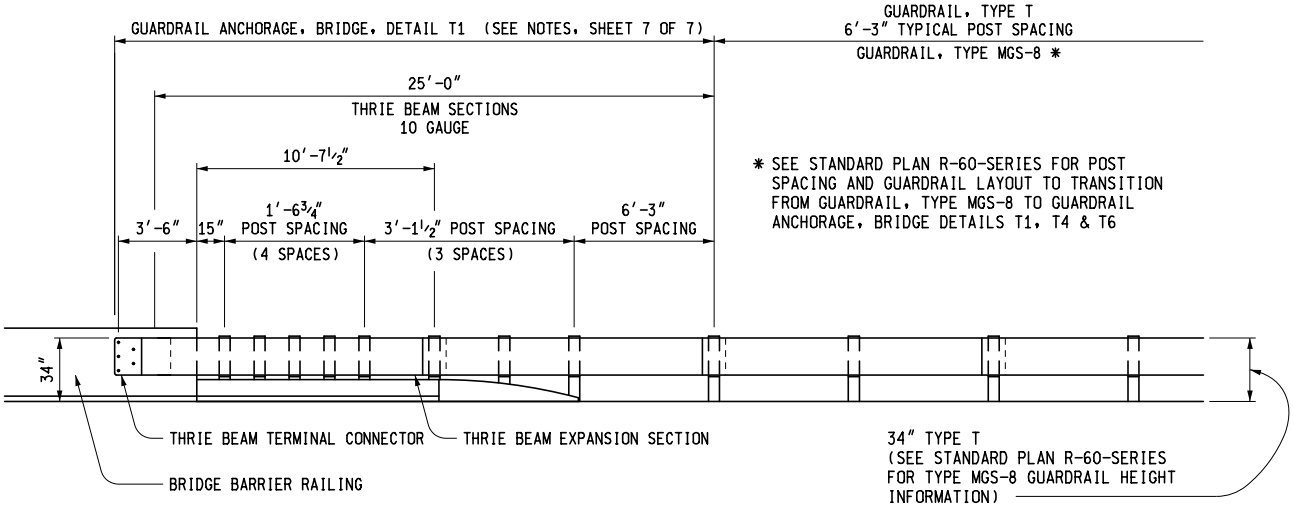


ELEVATION VIEW
(TO BE USED WITH GUARDRAIL, TYPE T & TYPE MGS-8)

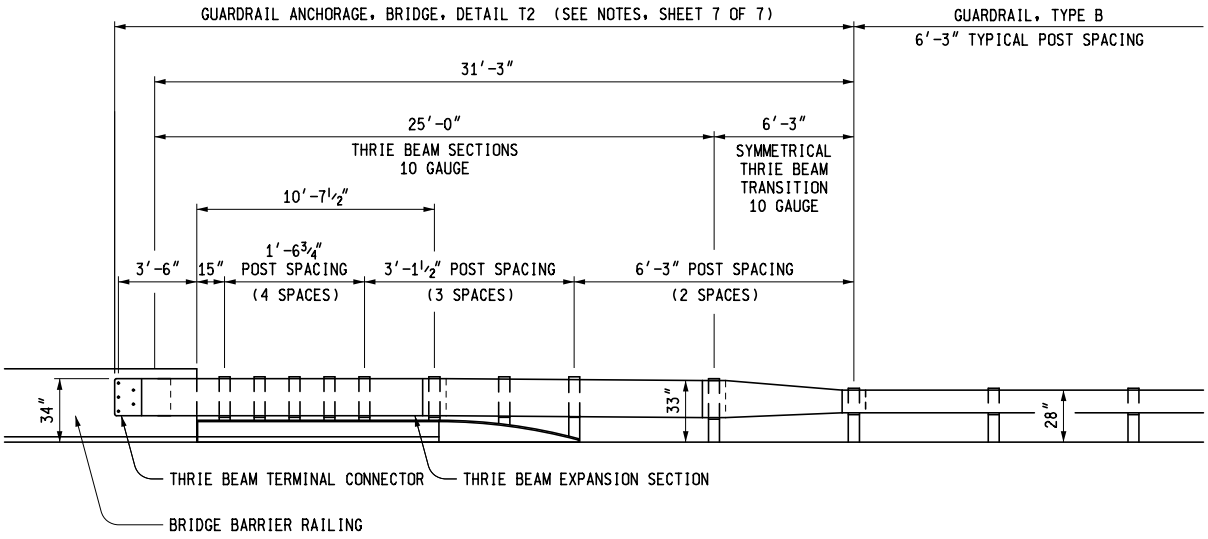


ELEVATION VIEW
(TO BE USED WITH GUARDRAIL, TYPE B)

# DETAILS FOR CONNECTING GUARDRAIL TO BRIDGE BARRIER RAILINGS, TYPE 4, 2-TUBE, 4-TUBE, AESTHETIC PARAPET TUBE, OR 3 TUBE WITH PICKETS

(WITHOUT EXPANSION AT BACKWALL)

| | | |
|---|---|---|
| MDOT Michigan Department of Transportation<br>PREPARED BY DESIGN DIVISION<br>DRAWN BY: B.L.T.<br>CHECKED BY: W.K.P. | DEPARTMENT DIRECTOR<br>Paul C. Ajegba<br>APPROVED BY: _____<br>DIRECTOR, BUREAU OF FIELD SERVICES<br>APPROVED BY: _____<br>DIRECTOR, BUREAU OF DEVELOPMENT | MICHIGAN DEPARTMENT OF TRANSPORTATION<br>BUREAU OF DEVELOPMENT SPECIAL DETAIL FOR<br>GUARDRAIL ANCHORAGE, BRIDGE, DETAILS<br>FOR EXISTING BRIDGE BARRIER RAILINGS<br>F.H.W.A. APPROVAL · 7-20-2022 PLAN DATE · R-67-SD · SHEET 1 OF 7 |

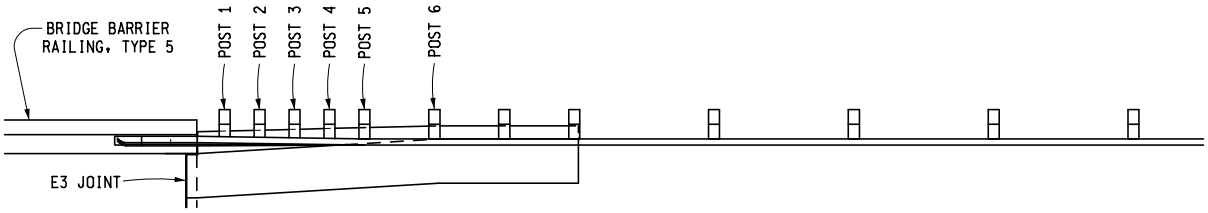


PLAN VIEW

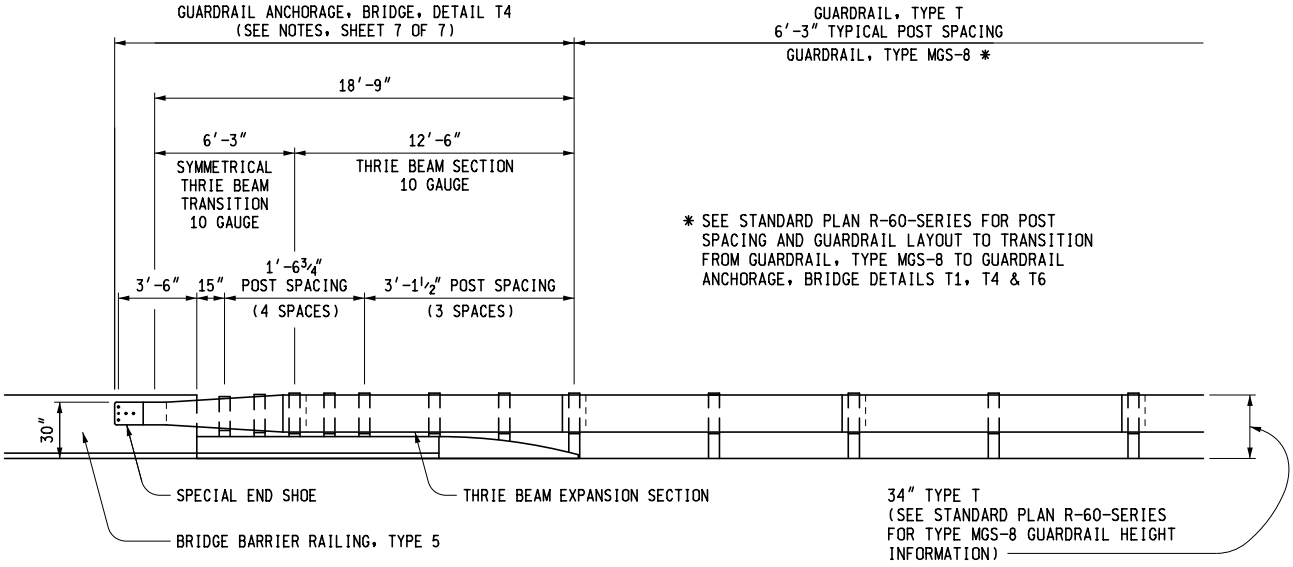


ELEVATION VIEW
(TO BE USED WITH GUARDRAIL, TYPE T & TYPE MGS-8)

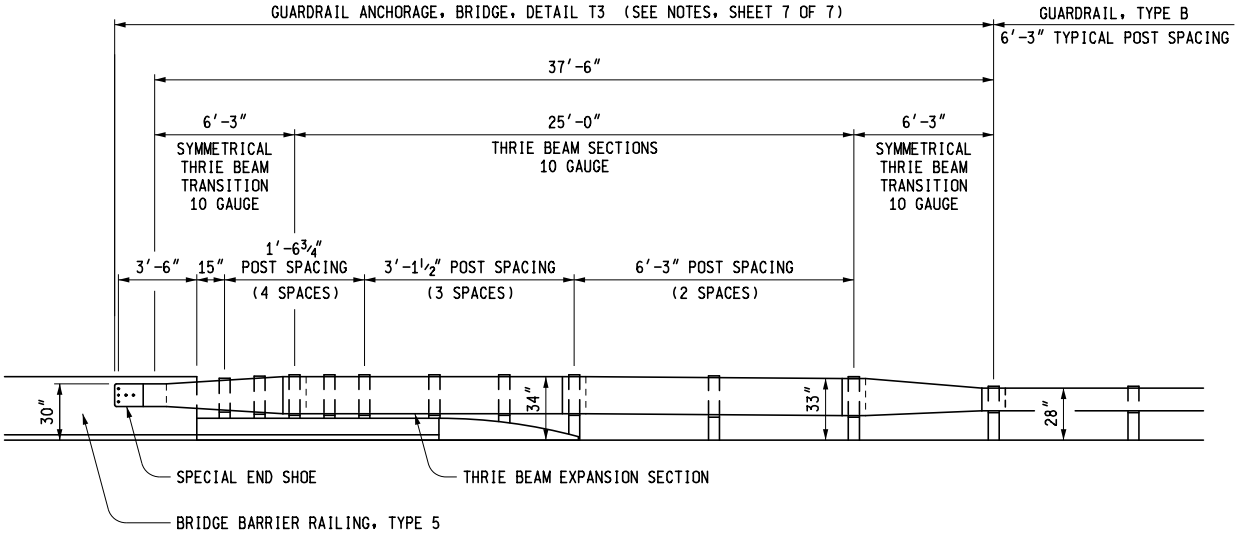


ELEVATION VIEW
(TO BE USED WITH GUARDRAIL, TYPE B)

## DETAILS FOR CONNECTING GUARDRAIL TO BRIDGE BARRIER RAILINGS, TYPE 5

(WITHOUT EXPANSION AT BACKWALL)

MICHIGAN DEPARTMENT OF TRANSPORTATION
BUREAU OF DEVELOPMENT SPECIAL DETAIL FOR

# GUARDRAIL ANCHORAGE, BRIDGE, DETAILS

## FOR EXISTING BRIDGE BARRIER RAILINGS

| F.H.W.A. APPROVAL | 7-20-2022 PLAN DATE | R-67-SD | SHEET 2 OF 7 |
|---|---|---|---|

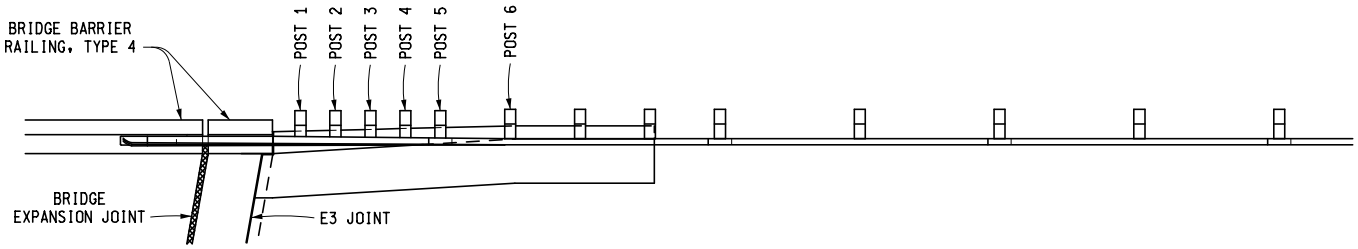


PLAN VIEW

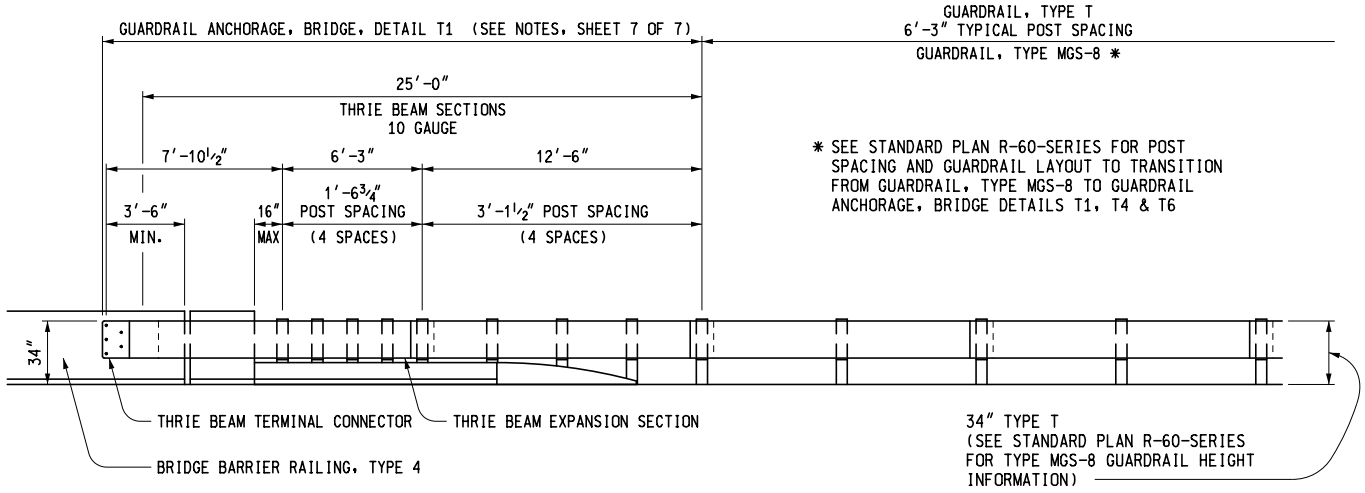


ELEVATION VIEW
(TO BE USED WITH GUARDRAIL, TYPE T & TYPE MGS-8)

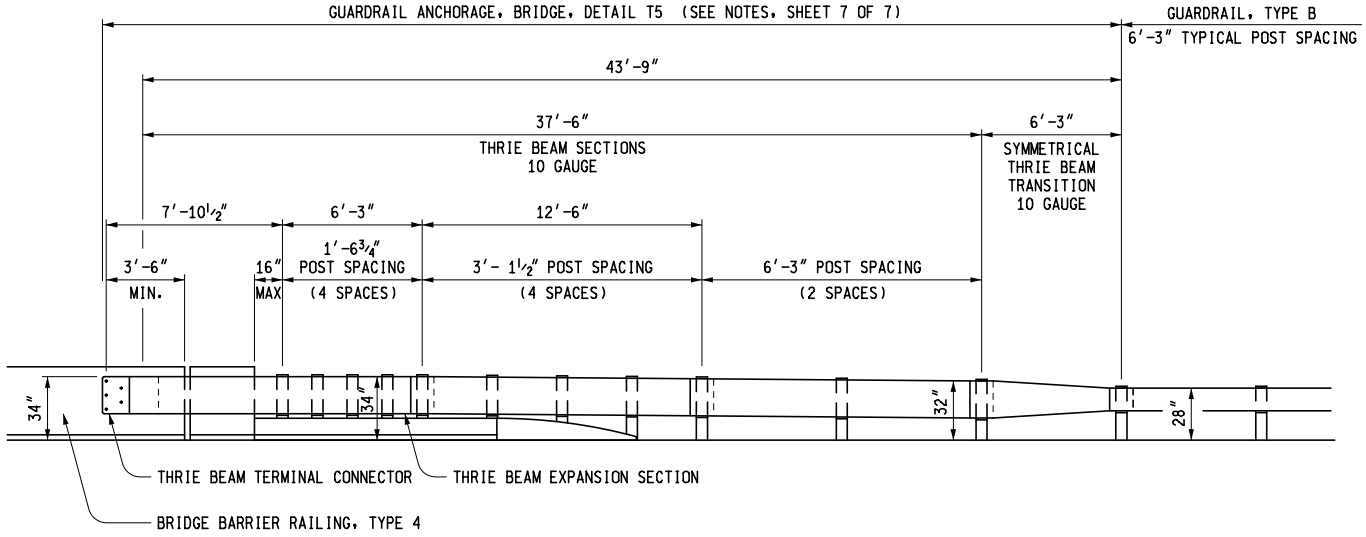


ELEVATION VIEW
(TO BE USED WITH GUARDRAIL, TYPE B)

# DETAILS FOR CONNECTING GUARDRAIL TO BRIDGE BARRIER RAILINGS, TYPE 4, 2-TUBE, 4-TUBE, AESTHETIC PARAPET TUBE, OR 3 TUBE WITH PICKETS

(WITH EXPANSION AT BACKWALL/END WALL OR SLEEPER SLAB)

MICHIGAN DEPARTMENT OF TRANSPORTATION
BUREAU OF DEVELOPMENT SPECIAL DETAIL FOR

## GUARDRAIL ANCHORAGE, BRIDGE, DETAILS

**FOR EXISTING BRIDGE BARRIER RAILINGS**

| F.H.W.A. APPROVAL | 7-20-2022 PLAN DATE | R-67-SD | SHEET 3 OF 7 |
|---|---|---|---|

NOTE: FILLER WALL END BLOCK MAY BE OMITTED WHEN FIRST ANCHORAGE POST CAN BE INSTALLED FULL DEPTH 1′-3″ FROM BRIDGE PIER.

| APPROACH POST SPACING REQUIREMENTS | | | |
|---|---|---|---|
| DISTANCE FROM ANCHOR BOLTS TO FIRST POST | 7′-11¾″ | 9′-6½″ | 11′-1¼″ |
| NUMBER OF 1′-6¾″ POST SPACINGS | 4 | 5 | 4 |
| NUMBER OF 3′-1½″ POST SPACINGS | 4 | 3 | 3 |

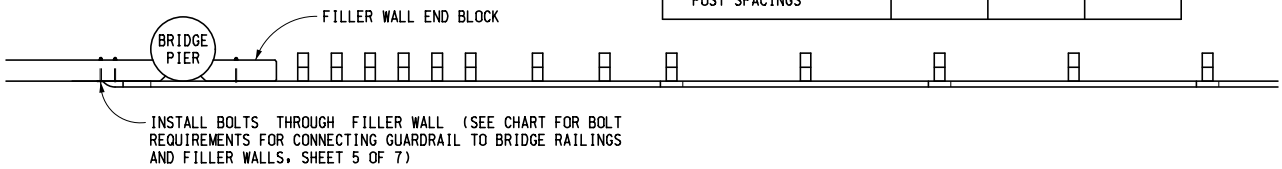


PLAN VIEW

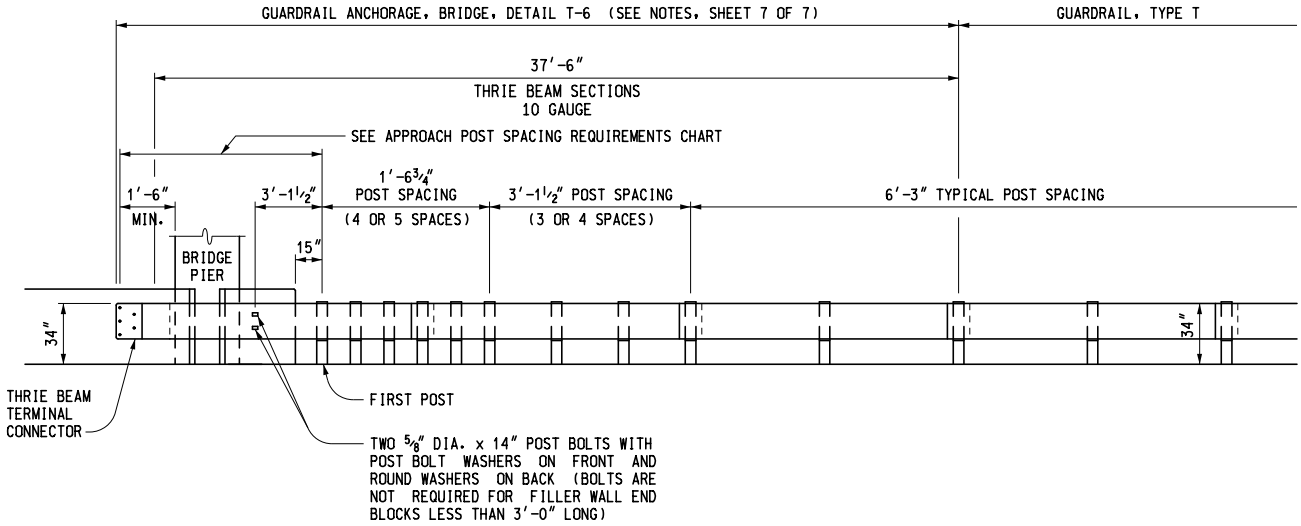


ELEVATION VIEW
(TO BE USED WITH GUARDRAIL, TYPE T)

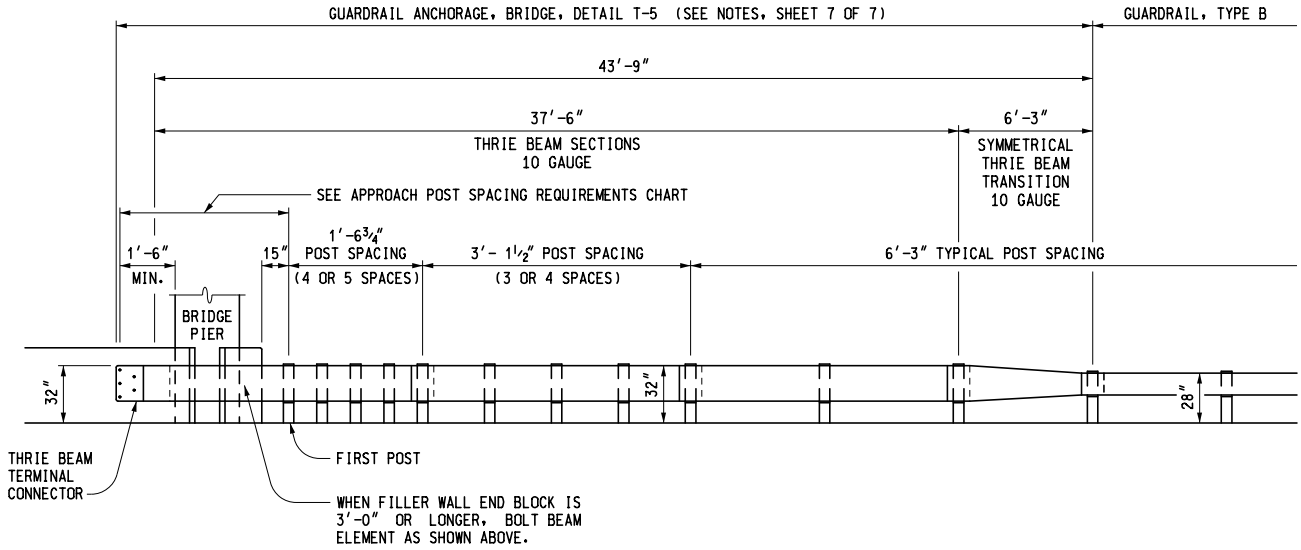


ELEVATION VIEW
(TO BE USED WITH GUARDRAIL, TYPE B)

## DETAILS FOR CONNECTING GUARDRAIL TO FILLER WALLS

MICHIGAN DEPARTMENT OF TRANSPORTATION
BUREAU OF DEVELOPMENT SPECIAL DETAIL FOR

# GUARDRAIL ANCHORAGE, BRIDGE, DETAILS

## FOR EXISTING BRIDGE BARRIER RAILINGS

| F.H.W.A. APPROVAL | 7-20-2022 PLAN DATE | R-67-SD | SHEET 4 OF 7 |
|---|---|---|---|

HIGH STRENGTH 7/8" DIA. HEX HEAD BOLT AND NUTS SHALL BE USED TO CONNECT GUARDRAIL TO BRIDGE RAILINGS WITH ROUND WASHERS ON FRONT AND SQUARE WASHERS ON BACK. (SEE CHART BELOW FOR LENGTHS AND NUMBER REQUIRED.) WASHER DETAILS ARE SHOWN ON SHEET 6 OF 7.

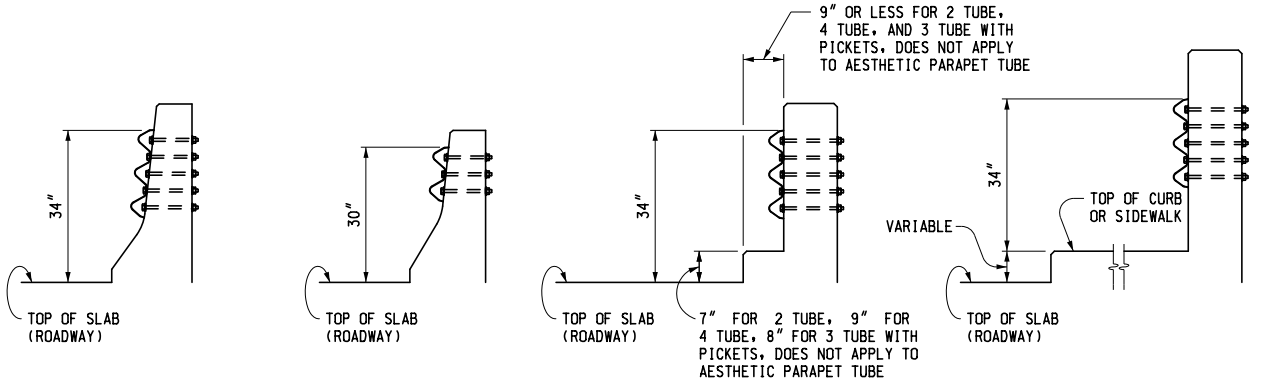


BRIDGE BARRIER RAILING TYPE 4

BRIDGE BARRIER RAILING TYPE 5

BRIDGE RAILING, 2 TUBE, 4 TUBE, 3 TUBE WITH PICKETS OR AESTHETIC PARAPET TUBE
(WITHOUT SIDEWALK OR BRUSH BLOCK)

BRIDGE RAILING, 4 TUBE, 3 TUBE WITH PICKETS OR AESTHETIC PARAPET TUBE
(WITH SIDEWALK)

## SECTIONS AT BRIDGE RAILINGS

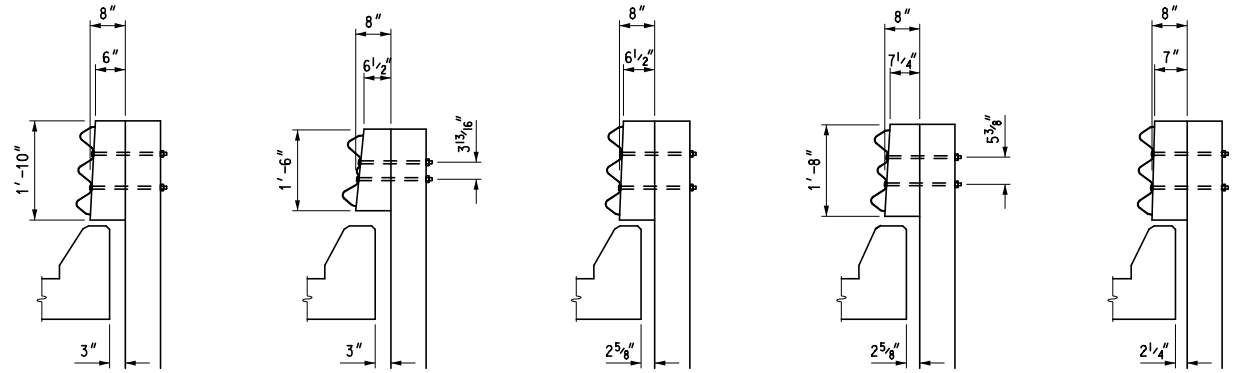


POST 1 FOR BRIDGE BARRIER RAILING, TYPE 4

POST 1 FOR BRIDGE BARRIER RAILING, TYPE 5

POST 2 FOR BRIDGE BARRIER RAILING, TYPE 4

POST 2 FOR BRIDGE BARRIER RAILING, TYPE 5

POST 3

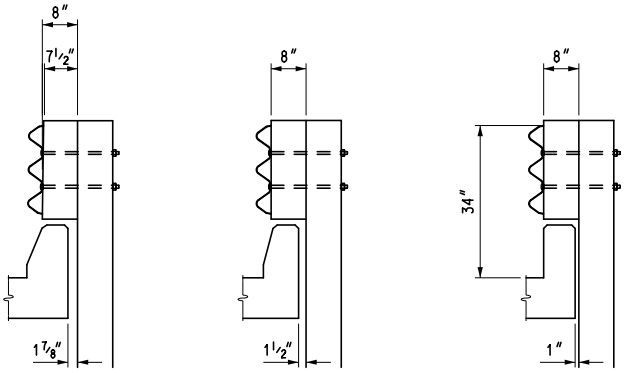


POST 4

POST 5

POST 6

| BOLT REQUIREMENTS FOR CONNECTING GUARDRAIL TO BRIDGE RAILINGS & FILLER WALLS | | | |
|---|---|---|---|
| BRIDGE RAILING | BOLT LENGTH | MINIMUM THREAD LENGTH | NUMBER REQUIRED |
| TYPE 4 | 12 1/2" | 4" | 5 |
| TYPE 5 | 11 1/2" | 4" | 4 |
| 2 TUBE | WALL THICKNESS + 2" | 2" | 5 |
| 4 TUBE | WALL THICKNESS + 2" | 2" | 5 |
| 3 TUBE WITH PICKETS | WALL THICKNESS + 2" | 2" | 5 |
| AESTHETIC PARAPET | WALL THICKNESS + 2" | 2" | 5 |
| ** FILLER WALL | WALL THICKNESS + 2" | 2" | 5 |
| SHORTER BOLT LENGTHS MAY BE USED PROVIDED THE BOLT EXTENDS 1/4" BEYOND THE NUT WHEN TIGHTENED. | | | |

** THE USE OF 7/8" DIA. ADHESIVE ANCHORED BOLTS EMBEDDED 8" TO ATTACH GUARDRAIL TO FILLER WALLS WILL BE ALLOWED, INSTEAD OF BOLTING THROUGH THE FILLER WALL, IN THE FOLLOWING LOCATIONS:

1. AT OR NEAR THE JOINT LINE WHEN A FILLER WALL IS A DIFFERENT THICKNESS THAN THE FILLER WALL EXTENSION.
2. IN EXISTING FILLER WALLS THICKER THAN 1'-6".
3. WHEN CONDITIONS PROHIBIT THE USE OF BOLTS.

## GUARDRAIL POST SECTIONS FOR GUARDRAIL ANCHORAGE, BRIDGE

NOTE: ADHESIVE ANCHORS SHALL BE SELECTED FROM THE QUALIFIED PRODUCTS LIST OF THE MATERIALS SAMPLING GUIDE.

NOTE:
POST AND BLOCK SECTIONS FOR THE SINGLE FACE, CONCRETE BARRIER, AND THE 2 TUBE, 4 TUBE, 3 TUBE WITH PICKETS AND AESTHETIC PARAPET TUBE BRIDGE RAILINGS SHALL BE THE SAME AS THAT SHOWN ON POST 6. POST SPACING SHALL BE AS SHOWN IN ELEVATION VIEWS.

MICHIGAN DEPARTMENT OF TRANSPORTATION
BUREAU OF DEVELOPMENT SPECIAL DETAIL FOR

# GUARDRAIL ANCHORAGE, BRIDGE, DETAILS

## FOR EXISTING BRIDGE BARRIER RAILINGS

| F.H.W.A. APPROVAL | 7-20-2022 PLAN DATE | R-67-SD | SHEET 5 OF 7 |
|---|---|---|---|

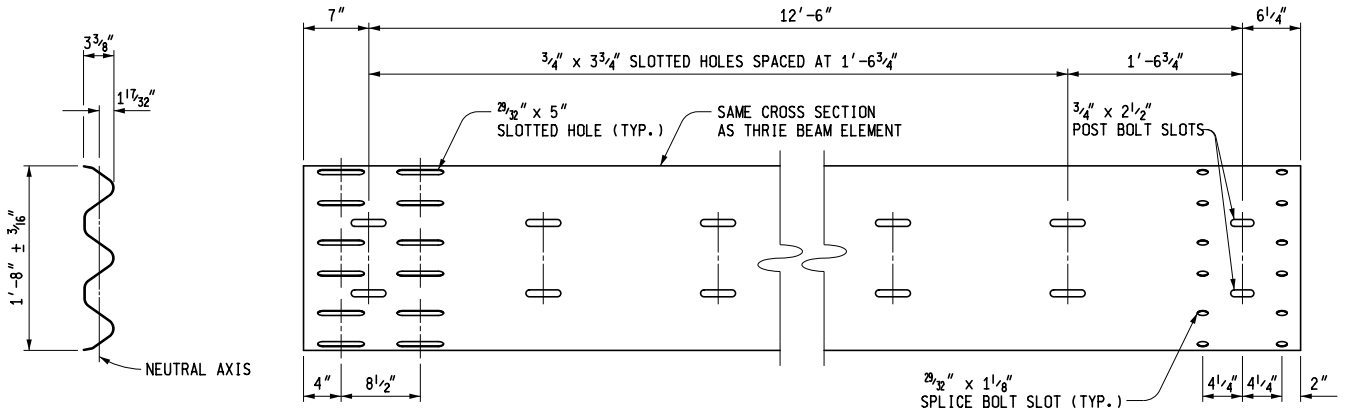


THRIE BEAM EXPANSION SECTION

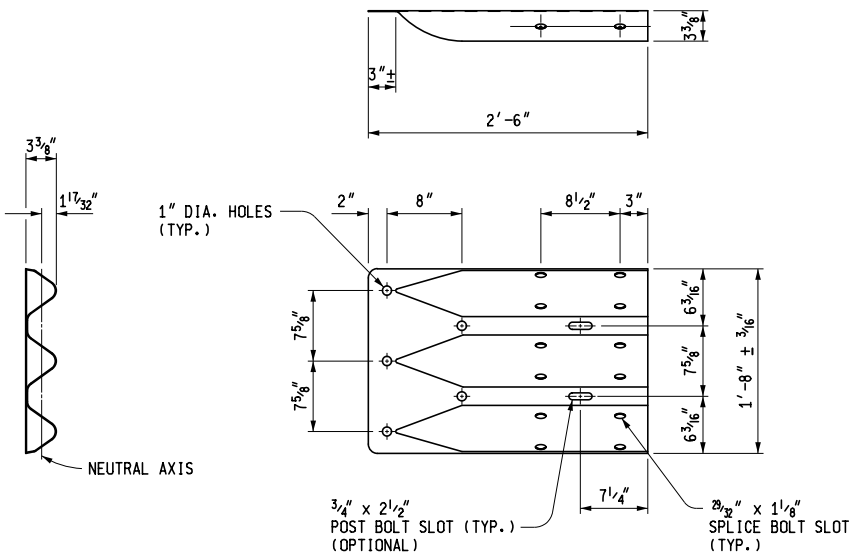


THRIE BEAM TERMINAL CONNECTOR

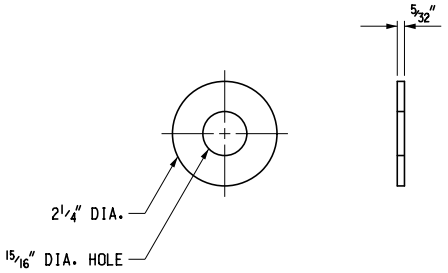


ROUND WASHER FOR
7/8" DIA. BOLTS

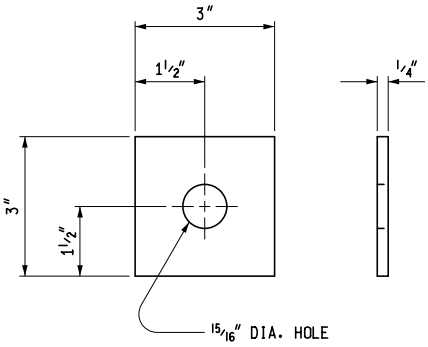


SQUARE WASHER FOR
7/8" DIA. BOLTS

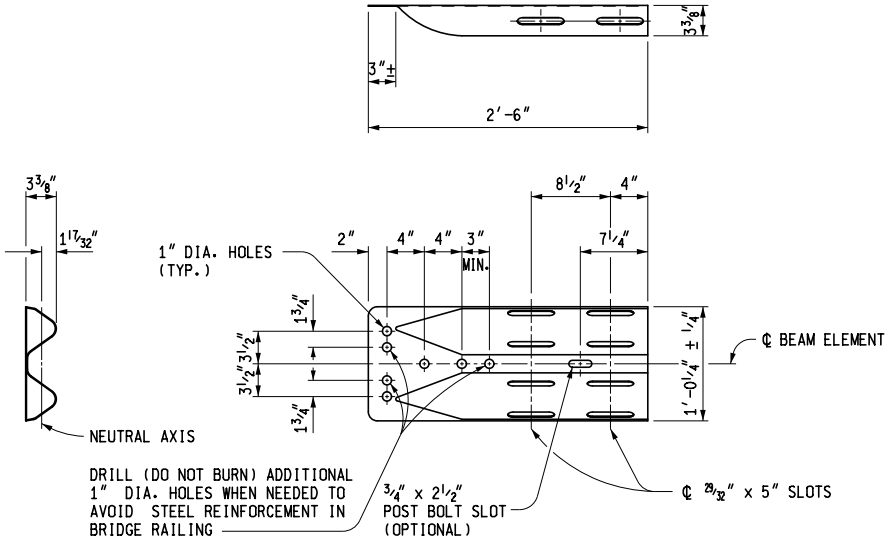


SPECIAL END SHOE

MICHIGAN DEPARTMENT OF TRANSPORTATION
BUREAU OF DEVELOPMENT SPECIAL DETAIL FOR

# GUARDRAIL ANCHORAGE, BRIDGE, DETAILS

## FOR EXISTING BRIDGE BARRIER RAILINGS

| F.H.W.A. APPROVAL | 7-20-2022 PLAN DATE | R-67-SD | SHEET 6 OF 7 |
|---|---|---|---|

NOTES:

ALL POSTS, OFFSET BLOCKS, BEAM ELEMENTS, REFLECTORS, AND HARDWARE, (INCLUDING BOLTS, NUTS, AND WASHERS) SHALL CONFORM TO THE CURRENT STANDARD SPECIFICATIONS AND TO THE CURRENT STANDARD PLAN R-60-SERIES, WHERE APPLICABLE, EXCEPT AS SPECIFIED ON THIS STANDARD.

BEAM ELEMENTS IDENTIFIED AS 12 GAUGE MUST MEET CLASS A REQUIREMENTS PER AASHTO M 180. BEAM ELEMENTS IDENTIFIED AS 10 GAUGE MUST MEET CLASS B REQUIREMENTS PER AASHTO M 180.

ALL POSTS USED TO CONSTRUCT GUARDRAIL ANCHORAGE, BRIDGE, DETAIL T1 THROUGH T6, SHALL BE 7'-0" LONG STEEL POSTS (W6 x 8.5 OR W6 x 9) OR WOOD POSTS (6" x 8").

THE THRIE BEAM TERMINAL CONNECTOR AND SPECIAL END SHOE SHALL BE THE SAME MATERIAL AS ADJACENT RUN OF GUARDRAIL, AND SHALL NOT BE LIGHTER THAN 10 GAUGE (0.138").

SECTIONS OF THE THRIE BEAM ELEMENT REQUIRED TO BE TWISTED FOR USE IN ANCHORAGE SHALL BE FIELD BENT.

GUARDRAIL BEAM ELEMENTS SHALL BE LAPPED IN THE DIRECTION OF TRAFFIC, EXCEPT FOR THE THRIE BEAM TERMINAL CONNECTOR WHICH MAY BE LAPPED IN EITHER DIRECTION.

SPLICE BOLTS SHALL BE USED WHEN SPLICING THE THRIE BEAM TERMINAL CONNECTOR TO THE THRIE BEAM EXPANSION SECTION AND WHEN SPLICING THE SPECIAL END SHOE TO THE TRANSITION SECTION. THE SPLICE BOLT NUT SHALL BE INSTALLED FINGER-TIGHT AND SHALL FULLY ENGAGE THE SPLICE BOLT WITH A MINIMUM OF ONE THREAD EXTENDING BEYOND THE NUT. THIS SHALL BE FOLLOWED UP BY UPSETTING THE FIRST THREAD ON THE OUTSIDE OF THE NUT WITH A CENTER PUNCH OR COLD CHISEL, SO THAT IT WILL NOT LOOSEN.

GUARDRAIL ANCHORAGE, BRIDGE, DETAILS T1, T2, AND T5 REQUIRE THAT THE THRIE BEAM TERMINAL CONNECTOR BE ATTACHED TO THE $^{29}/_{32}$" x 5" LONG SLOTTED HOLES IN THE THRIE BEAM EXPANSION SECTION.

SEE APPROPRIATE PLANS TO DETERMINE WHETHER GUARDRAIL ANCHORAGE, BRIDGE SPANS A BRIDGE EXPANSION JOINT.

SEE THE CURRENT STANDARD PLAN R-55-SERIES FOR FILLER WALLS AND FILLER WALL END BLOCK.

SEE STANDARD PLAN R-54-SERIES FOR "CONCRETE BARRIER, SINGLE FACE, TYPE __".

CONCRETE BARRIER, SINGLE FACE TRANSITION SECTION SHALL BE INCLUDED IN THE PAY ITEM "CONCRETE BARRIER, SINGLE FACE, TYPE __".

MICHIGAN DEPARTMENT OF TRANSPORTATION

BUREAU OF DEVELOPMENT SPECIAL DETAIL FOR

# GUARDRAIL ANCHORAGE, BRIDGE, DETAILS

## FOR EXISTING BRIDGE BARRIER RAILINGS

| F.H.W.A. APPROVAL | 7-20-2022<br>PLAN DATE | R-67-SD | SHEET<br>7 OF 7 |
|---|---|---|---|

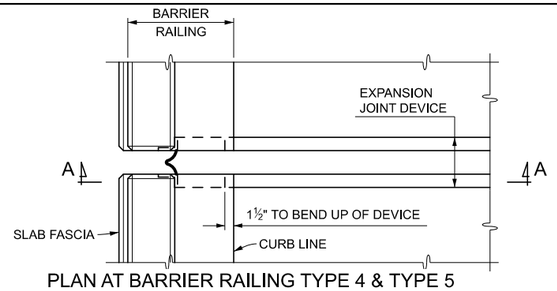


PLAN AT BARRIER RAILING TYPE 4 & TYPE 5

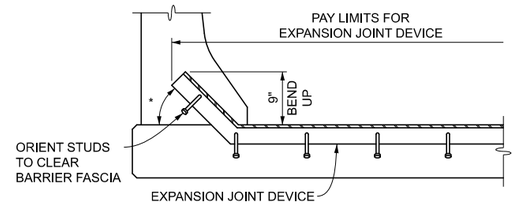


SECTION A - A

* BEND ANCHORAGE UP 45° ALONG ℄ OF EXPANSION JOINT.

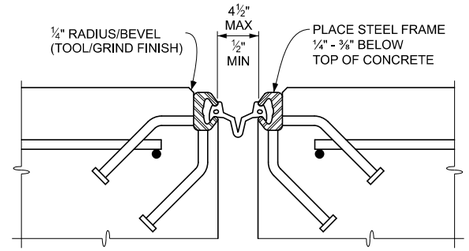


SECTION THROUGH EXPANSION JOINT

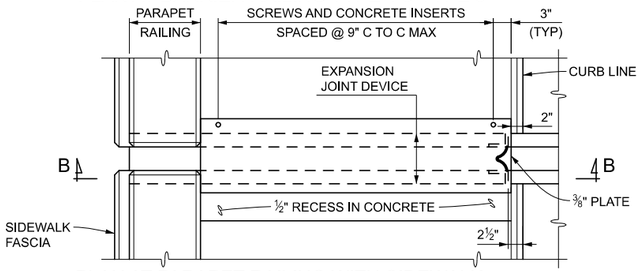


PLAN AT PARAPET RAILING WITH SIDEWALK

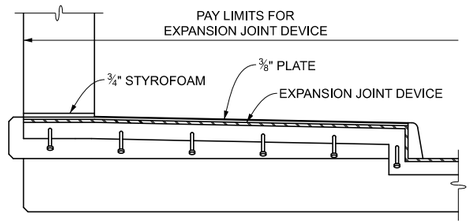


SECTION B - B

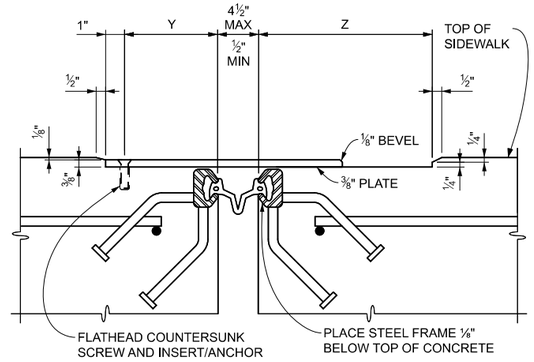


SECTION THROUGH EXPANSION JOINT AND COVER PLATE

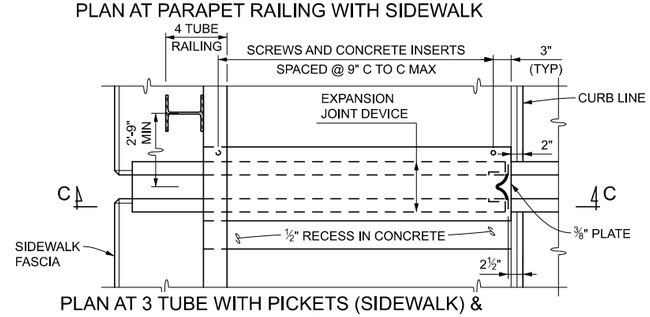


PLAN AT 3 TUBE WITH PICKETS (SIDEWALK) & 4 TUBE (PEDESTRAIN) STEEL RAILING

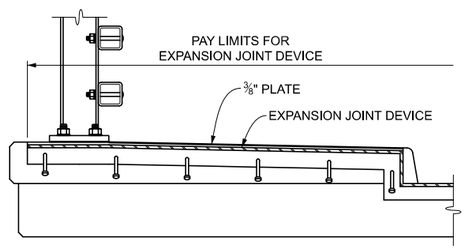


SECTION C - C

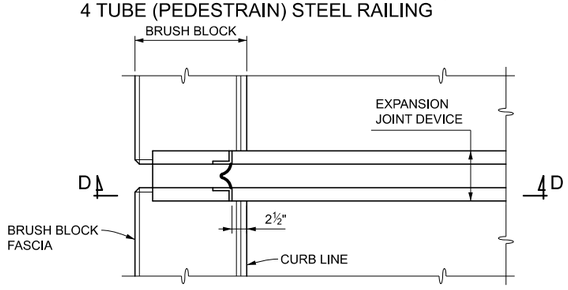


PLAN AT 2 TUBE, 3 TUBE WITH PICKETS (BRUSH BLOCK) & 4 TUBE (BICYCLE) STEEL RAILING

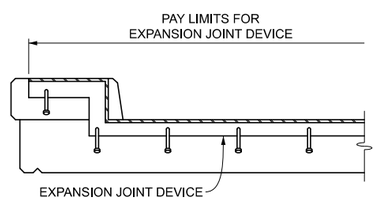


SECTION D - D

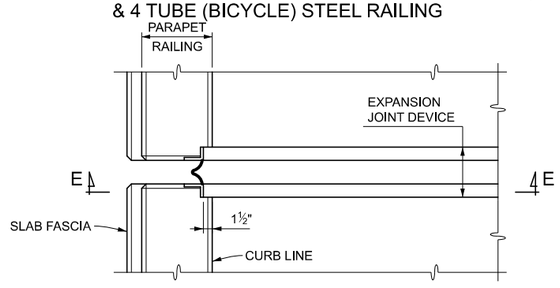


PLAN AT FLUSH MOUNT PARAPET RAILING

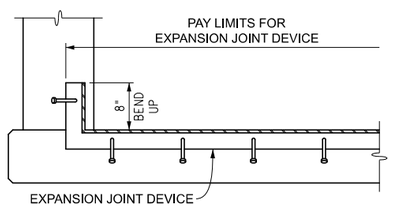


SECTION E - E

# NOTES:

JOINT TYPES

PROVIDE AN EXPANSION JOINT DEVICE THAT INCLUDES A CONTINUOUS NEOPRENE (OR EQUIVALENT) SEAL ACROSS THE DECK. UNLESS OTHERWISE NOTED, ANY OF THE DEVICES LISTED BELOW THAT MEET THAT ARE SUITABLE TO MEET THE TOTAL MOVEMENT NOTED ON THE PLANS ARE PERMITTED:

| DEVICE | MANUFACTURER |
|---|---|
| WABO STRIP SEAL - TYPE M | WATSON-BOWMAN & ACME, INC. |
| WABO STRIP SEAL - TYPE A | WATSON-BOWMAN & ACME, INC. |
| STEELFLEX-SSA2 | D.S. BROWN |
| STEELFLEX-SSCM | D.S. BROWN |
| ONFLEX 40 SS | STRUCTURAL RUBBER PRODUCTS CO. |
| ONFLEX 40 SSA | STRUCTURAL RUBBER PRODUCTS CO. |

DETAILS AT CURBS OR BARRIERS

THE DETAILS ON THIS SHEET SHOW AN APPROVED MEANS OF TERMINATING THE EXPANSION JOINT DEVICE AT CURBS OR BARRIERS. VARIATIONS OR ALTERNATIVE SCHEMES WILL BE CONSIDERED AND MAY BE USED IF APPROVED BY THE ENGINEER.

| STRUCTURE NUMBER | ANGLE OF CROSSING TO NEAREST 10° | LOCATION OF JOINT | MIN. TOT. TRAVEL ALONG CENTERLINE OF BRIDGE * | REQUIRED LENGTH OF EXPANSION JOINT DEVICE |
|---|---|---|---|---|
| | | | | |
| | | | | |
| | | | | |
| | | | | |
| | | | | |
| | | | | |
| | | | | |
| | | | | |
| | | | | |
| | | | | |
| | | | | |
| | | | | |

| WABO STRIP SEAL TYPE M | | | |
|---|---|---|---|
| TOTAL TRAVEL * | PLATE WIDTH | Y | Z |
| < 1" | 10" | 3¾" | 5¾" |
| 1" - 2" | 11" | 3¾" | 6¾" |
| 2" - 3" | 12" | 3¾" | 7¾" |
| > 3" | 13" | 3¾" | 8¾" |

| ALL OTHER DEVICES | | | |
|---|---|---|---|
| TOTAL TRAVEL * | PLATE WIDTH | Y | Z |
| < 1½" | 8" | 2½" | 5" |
| 1½" - 3½" | 10" | 2½" | 7" |
| > 3½" | 12" | 2½" | 9" |

* SEE TABLE FOR MINIMUM TOTAL TRAVEL ALONG CENTERLINE OF BRIDGE

| QUANTITY | | |
|---|---|---|
| ITEM | UNIT | AMOUNT |
| Expansion Joint Device | Ft | |
| Expansion Joint Device, Cover Plate | Ft | |

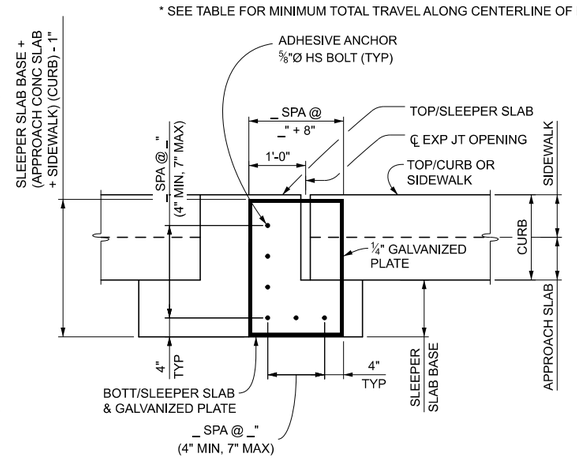


END PLATE DETAIL

(SLEEPER SLAB WITH APPROACH SLAB AND SIDEWALK OR CURB)

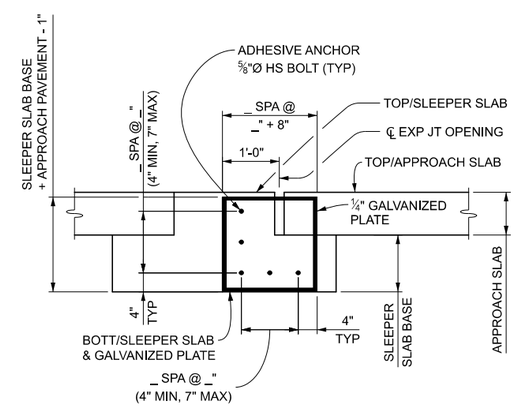


END PLATE DETAIL

(SLEEPER SLAB WITH APPROACH SLAB/PAVEMENT)

| END PLATE TABLE | |
|---|---|
| STRUCTURE NUMBER | SIZE |
| | |
| | |
| | |
| | |
| | |
| | |
| | |
| | |

| FINAL ROW PLAN REVISIONS | | | | SUBMITTAL DATE: | | | |
|---|---|---|---|---|---|---|---|
| NO. | DATE | AUTH | DESCRIPTION | NO. | DATE | AUTH | DESCRIPTION |
| | | | | | | | |
| | | | | | | | |

MDOT Michigan Department of Transportation

NO SCALE

| | | | |
|---|---|---|---|
| | DATE: | CS: | EXPANSION JOINT DETAILS |
| | DESIGN UNIT: | JN: | EJ3AE (07-25-2022) |
| FILE: | TSC: | | |

| DRAWING | SHEET |
|---|---|
| | SECT |

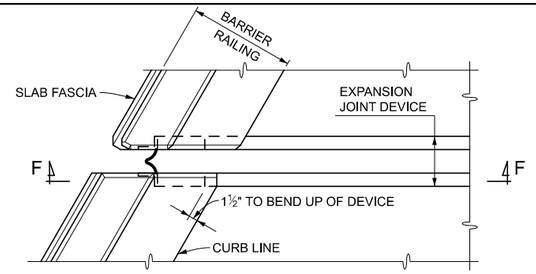


PLAN AT BARRIER RAILING TYPE 4 & TYPE 5

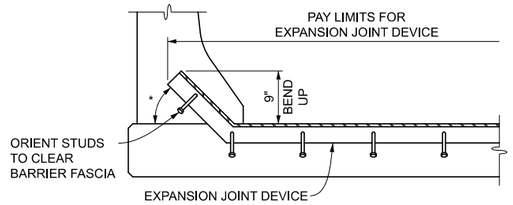


SECTION F - F

* FOR ANGLES OF CROSSING FROM 69° TO 45° INCLUSIVE, BEND ANCHORAGE UP 45° ALONG ℄ OF EXPANSION JOINT. FOR ANGLES OF CROSSING LESS THAN 45°, A SPECIAL ENDING MAY BE REQUIRED.

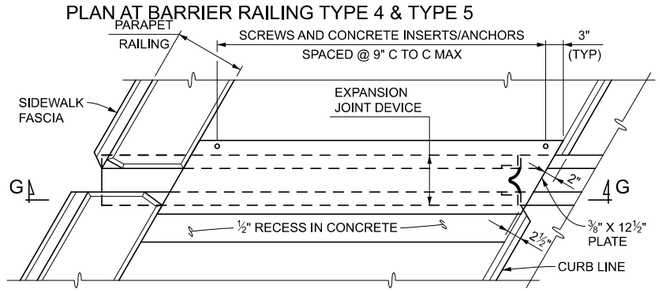


PLAN AT PARAPET RAILING WITH SIDEWALK

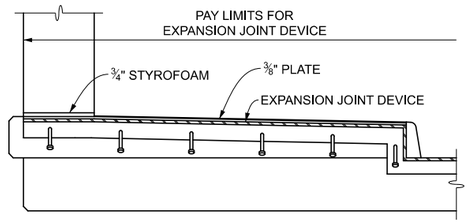


SECTION G - G

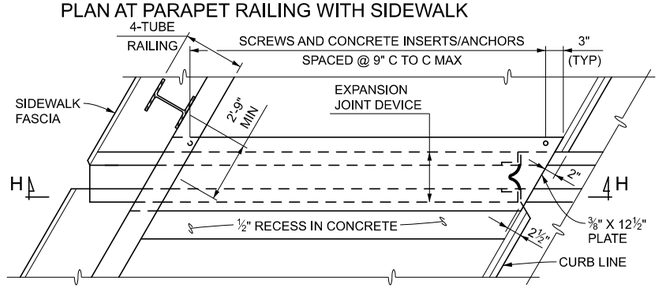


PLAN AT 3 TUBE WITH PICKETS (SIDEWALK) & 4 TUBE (PEDESTRAIN) STEEL RAILING

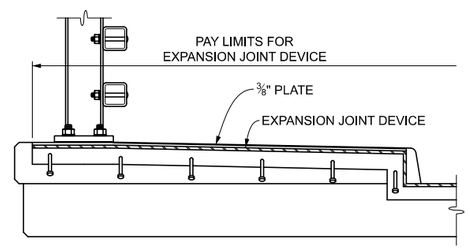


SECTION H - H

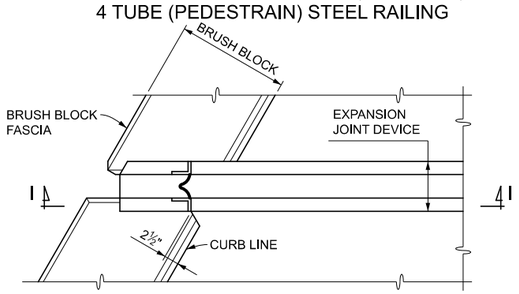


PLAN AT 2 TUBE, 3 TUBE WITH PICKETS (BRUSH BLOCK) & 4 TUBE (BICYCLE) STEEL RAILING

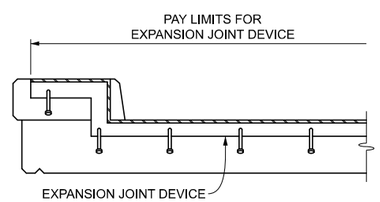


SECTION I - I

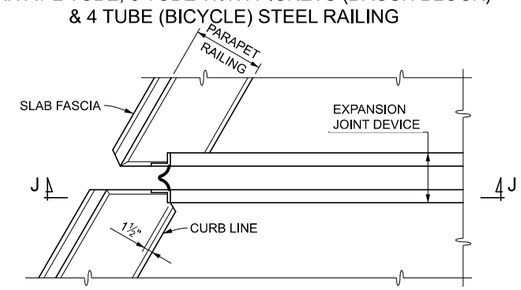


PLAN AT FLUSH MOUNT PARAPET RAILING

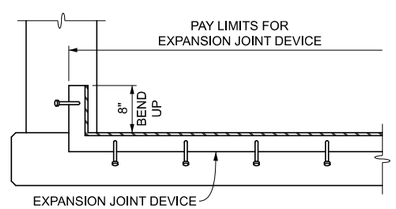


SECTION J - J

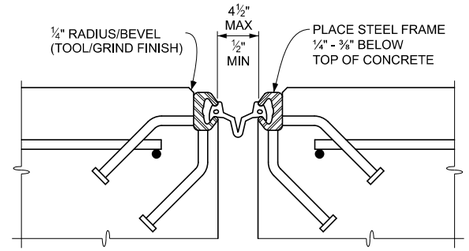


SECTION THROUGH EXPANSION JOINT

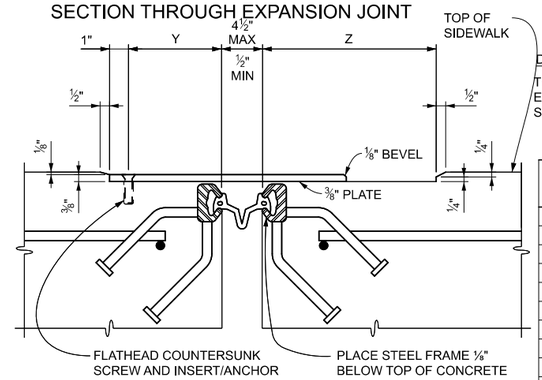


SECTION THROUGH EXPANSION JOINT AND COVER PLATE

| WABO STRIP SEAL TYPE M | | | |
|---|---|---|---|
| TOTAL TRAVEL * | PLATE WIDTH | Y | Z |
| < 1" | 10" | 3¾" | 5¾" |
| 1" - 2" | 11" | 3¾" | 6¾" |
| 2" - 3" | 12" | 3¾" | 7¾" |
| > 3" | 13" | 3¾" | 8¾" |

| ALL OTHER DEVICES | | | |
|---|---|---|---|
| TOTAL TRAVEL * | PLATE WIDTH | Y | Z |
| < 1½" | 8" | 2½" | 5" |
| 1½" - 3½" | 10" | 2½" | 7" |
| > 3½" | 12" | 2½" | 9" |

* SEE TABLE FOR MINIMUM TOTAL TRAVEL ALONG CENTERLINE OF BRIDGE

# NOTES:

JOINT TYPES

PROVIDE AN EXPANSION JOINT DEVICE THAT INCLUDES A CONTINUOUS NEOPRENE (OR EQUIVALENT) SEAL ACROSS THE DECK. UNLESS OTHERWISE NOTED, ANY OF THE DEVICES LISTED BELOW THAT MEET THAT ARE SUITABLE TO MEET THE TOTAL MOVEMENT NOTED ON THE PLANS ARE PERMITTED:

| DEVICE | MANUFACTURER |
|---|---|
| WABO STRIP SEAL - TYPE M | WATSON-BOWMAN & ACME, INC. |
| WABO STRIP SEAL - TYPE A | WATSON-BOWMAN & ACME, INC. |
| STEELFLEX-SSA2 | D.S. BROWN |
| STEELFLEX-SSCM | D.S. BROWN |
| ONFLEX 40 SS | STRUCTURAL RUBBER PRODUCTS CO. |
| ONFLEX 40 SSA | STRUCTURAL RUBBER PRODUCTS CO. |

DETAILS AT CURBS OR BARRIERS

THE DETAILS ON THIS SHEET SHOW AN APPROVED MEANS OF TERMINATING THE EXPANSION JOINT DEVICE AT CURBS OR BARRIERS. VARIATIONS OR ALTERNATIVE SCHEMES WILL BE CONSIDERED AND MAY BE USED IF APPROVED BY THE ENGINEER.

| STRUCTURE NUMBER | ANGLE OF CROSSING TO NEAREST 10° | LOCATION OF JOINT | MIN. TOT. TRAVEL ALONG CENTERLINE OF BRIDGE * | REQUIRED LENGTH OF EXPANSION JOINT DEVICE |
|---|---|---|---|---|
| | | | | |
| | | | | |
| | | | | |
| | | | | |
| | | | | |
| | | | | |
| | | | | |
| | | | | |
| | | | | |
| | | | | |
| | | | | |
| | | | | |

| QUANTITY | | |
|---|---|---|
| ITEM | UNIT | AMOUNT |
| Expansion Joint Device | Ft | |
| Expansion Joint Device, Cover Plate | Ft | |

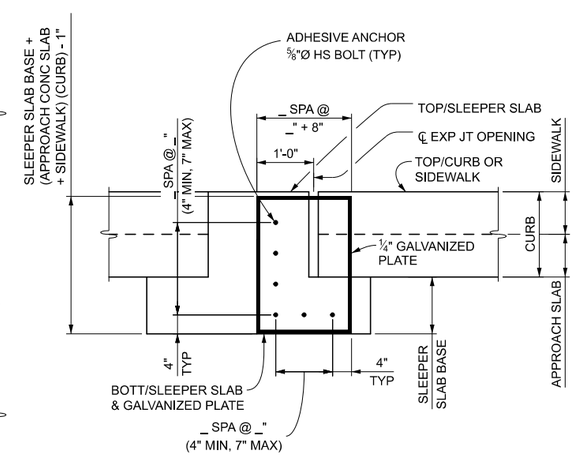


END PLATE DETAIL

(SLEEPER SLAB WITH APPROACH SLAB AND SIDEWALK OR CURB)

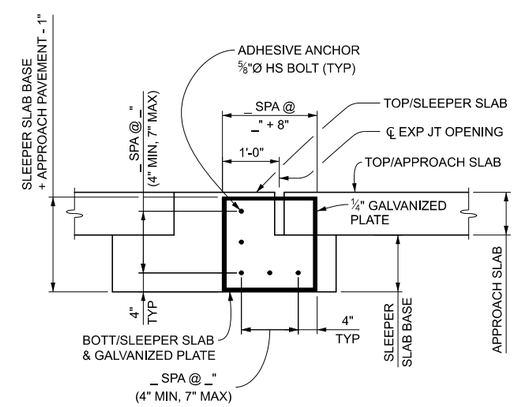


END PLATE DETAIL

(SLEEPER SLAB WITH APPROACH SLAB/PAVEMENT)

| END PLATE TABLE | |
|---|---|
| STRUCTURE NUMBER | SIZE |
| | |
| | |
| | |
| | |
| | |
| | |
| | |
| | |

| FINAL ROW PLAN REVISIONS SUBMITTAL DATE: | | | | | | | |
|---|---|---|---|---|---|---|---|
| NO. | DATE | AUTH | DESCRIPTION | NO. | DATE | AUTH | DESCRIPTION |
| | | | | | | | |
| | | | | | | | |

MDOT Michigan Department of Transportation

NO SCALE

| | | | | | |
|---|---|---|---|---|---|
| | DATE: | CS: | EXPANSION JOINT DETAILS | DRAWING | SHEET |
| | DESIGN UNIT: | JN: | EJ3AE (07-25-2022) | | SECT |
| FILE: | TSC: | | | | |

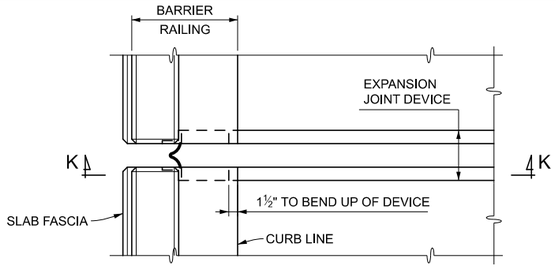


PLAN AT BARRIER RAILING TYPE 6 & TYPE 7

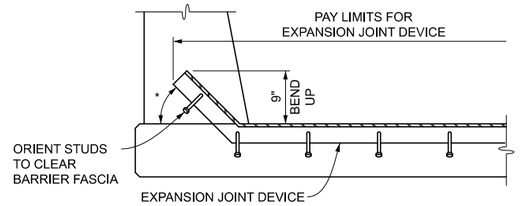


SECTION K - K

* BEND ANCHORAGE UP 45° ALONG ℄ OF EXPANSION JOINT.

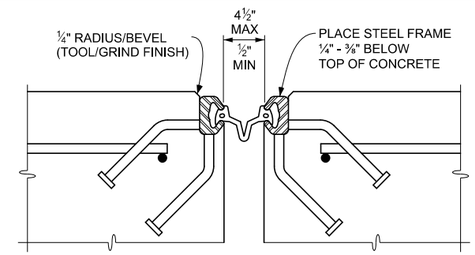


SECTION THROUGH EXPANSION JOINT

# NOTES:

JOINT TYPES

PROVIDE AN EXPANSION JOINT DEVICE THAT INCLUDES A CONTINUOUS NEOPRENE (OR EQUIVALENT) SEAL ACROSS THE DECK. UNLESS OTHERWISE NOTED, ANY OF THE DEVICES LISTED BELOW THAT MEET THAT ARE SUITABLE TO MEET THE TOTAL MOVEMENT NOTED ON THE PLANS ARE PERMITTED:

| DEVICE | MANUFACTURER |
|---|---|
| WABO STRIP SEAL - TYPE M | WATSON-BOWMAN & ACME, INC. |
| WABO STRIP SEAL - TYPE A | WATSON-BOWMAN & ACME, INC. |
| STEELFLEX-SSA2 | D.S. BROWN |
| STEELFLEX-SSCM | D.S. BROWN |
| ONFLEX 40 SS | STRUCTURAL RUBBER PRODUCTS CO. |
| ONFLEX 40 SSA | STRUCTURAL RUBBER PRODUCTS CO. |

DETAILS AT CURBS OR BARRIERS

THE DETAILS ON THIS SHEET SHOW AN APPROVED MEANS OF TERMINATING THE EXPANSION JOINT DEVICE AT CURBS OR BARRIERS. VARIATIONS OR ALTERNATIVE SCHEMES WILL BE CONSIDERED AND MAY BE USED IF APPROVED BY THE ENGINEER.

| STRUCTURE NUMBER | ANGLE OF CROSSING TO NEAREST 10° | LOCATION OF JOINT | MIN. TOT. TRAVEL ALONG CENTERLINE OF BRIDGE * | REQUIRED LENGTH OF EXPANSION JOINT DEVICE |
|---|---|---|---|---|
| | | | | |
| | | | | |
| | | | | |
| | | | | |
| | | | | |
| | | | | |
| | | | | |
| | | | | |
| | | | | |
| | | | | |
| | | | | |
| | | | | |

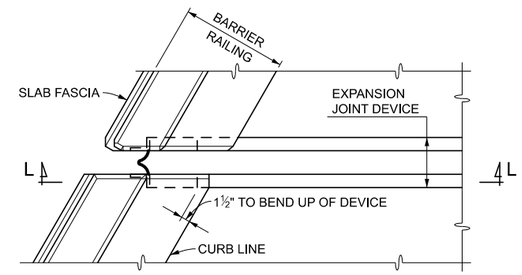


PLAN AT BARRIER RAILING TYPE 6 & TYPE 7

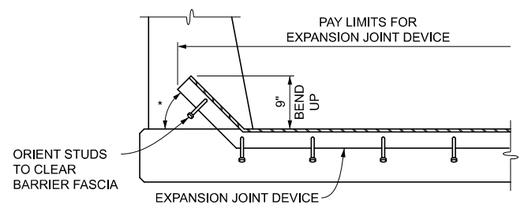


SECTION L - L

* FOR ANGLES OF CROSSING FROM 69° TO 45° INCLUSIVE, BEND ANCHORAGE UP 45° ALONG ℄ OF EXPANSION JOINT. FOR ANGLES OF CROSSING LESS THAN 45°, A SPECIAL ENDING MAY BE REQUIRED.

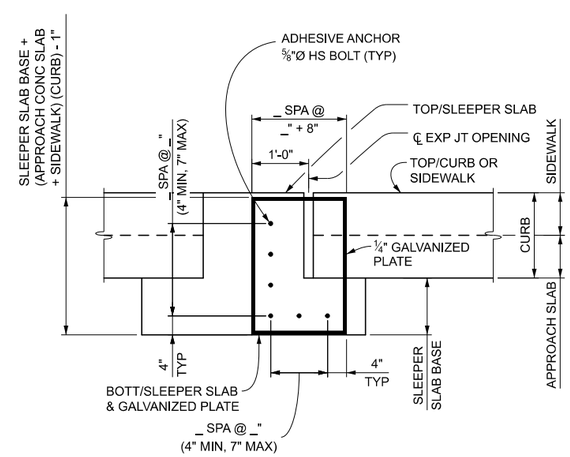


END PLATE DETAIL

(SLEEPER SLAB WITH APPROACH SLAB AND SIDEWALK OR CURB)

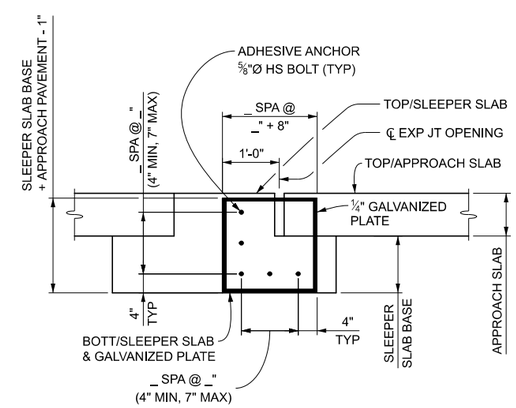


END PLATE DETAIL

(SLEEPER SLAB WITH APPROACH SLAB/PAVEMENT)

| END PLATE TABLE | |
|---|---|
| STRUCTURE NUMBER | SIZE |
| | |
| | |
| | |
| | |
| | |
| | |
| | |
| | |

| QUANTITY | | |
|---|---|---|
| ITEM | UNIT | AMOUNT |
| Expansion Joint Device | Ft | |
| Expansion Joint Device, Cover Plate | Ft | |

| FINAL ROW PLAN REVISIONS SUBMITTAL DATE: | | | | | | | |
|---|---|---|---|---|---|---|---|
| NO. | DATE | AUTH | DESCRIPTION | NO. | DATE | AUTH | DESCRIPTION |
| | | | | | | | |
| | | | | | | | |

MDOT Michigan Department of Transportation

NO SCALE

| | | | | | |
|---|---|---|---|---|---|
| | DATE: | CS: | EXPANSION JOINT DETAILS | DRAWING | SHEET |
| | DESIGN UNIT: | JN: | EJ3AE (07-25-2022) | | SECT |
| FILE: | TSC: | | | | |

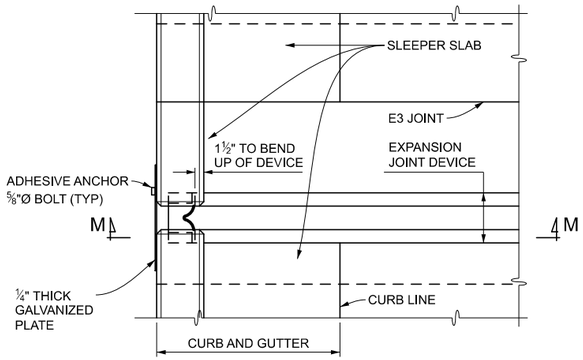


PLAN AT SLEEPER SLAB WITH CURB & GUTTER

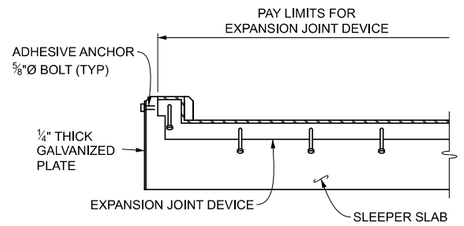


SECTION M - M

(MODIFY CURB HEIGHT/DETAIL AS NECESSARY)

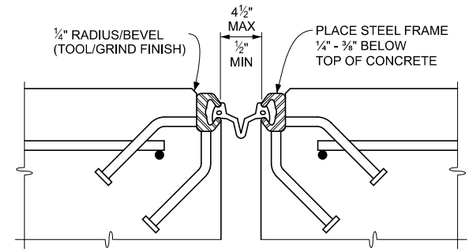


SECTION THROUGH EXPANSION JOINT

# NOTES:

JOINT TYPES

PROVIDE AN EXPANSION JOINT DEVICE THAT INCLUDES A CONTINUOUS NEOPRENE (OR EQUIVALENT) SEAL ACROSS THE DECK. UNLESS OTHERWISE NOTED, ANY OF THE DEVICES LISTED BELOW THAT MEET THAT ARE SUITABLE TO MEET THE TOTAL MOVEMENT NOTED ON THE PLANS ARE PERMITTED:

| DEVICE | MANUFACTURER |
|---|---|
| WABO STRIP SEAL - TYPE M | WATSON-BOWMAN & ACME, INC. |
| WABO STRIP SEAL - TYPE A | WATSON-BOWMAN & ACME, INC. |
| STEELFLEX-SSA2 | D.S. BROWN |
| STEELFLEX-SSCM | D.S. BROWN |
| ONFLEX 40 SS | STRUCTURAL RUBBER PRODUCTS CO. |
| ONFLEX 40 SSA | STRUCTURAL RUBBER PRODUCTS CO. |

DETAILS AT CURBS OR BARRIERS

THE DETAILS ON THIS SHEET SHOW AN APPROVED MEANS OF TERMINATING THE EXPANSION JOINT DEVICE AT CURBS OR BARRIERS. VARIATIONS OR ALTERNATIVE SCHEMES WILL BE CONSIDERED AND MAY BE USED IF APPROVED BY THE ENGINEER.

| STRUCTURE NUMBER | ANGLE OF CROSSING TO NEAREST 10° | LOCATION OF JOINT | MIN. TOT. TRAVEL ALONG CENTERLINE OF BRIDGE * | REQUIRED LENGTH OF EXPANSION JOINT DEVICE |
|---|---|---|---|---|
| | | | | |
| | | | | |
| | | | | |
| | | | | |
| | | | | |
| | | | | |
| | | | | |
| | | | | |
| | | | | |
| | | | | |
| | | | | |
| | | | | |

| QUANTITY | | |
|---|---|---|
| ITEM | UNIT | AMOUNT |
| Expansion Joint Device | Ft | |
| Expansion Joint Device, Cover Plate | Ft | |

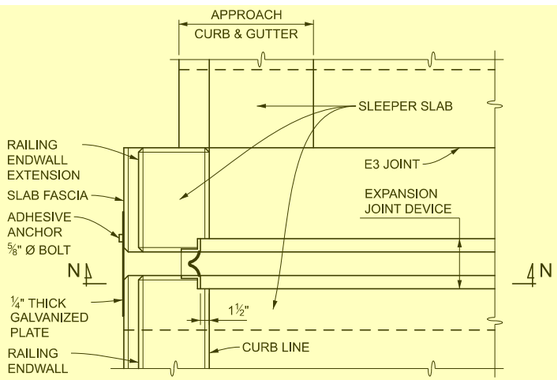


PLAN AT SLEEPER SLAB WITH RAILING ENDWALL

(RAILING ENDING AT SLEEPER SLAB)

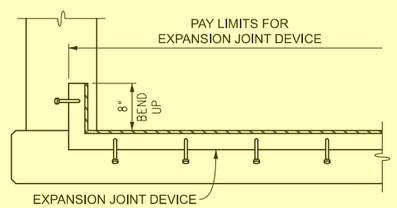


SECTION N - N

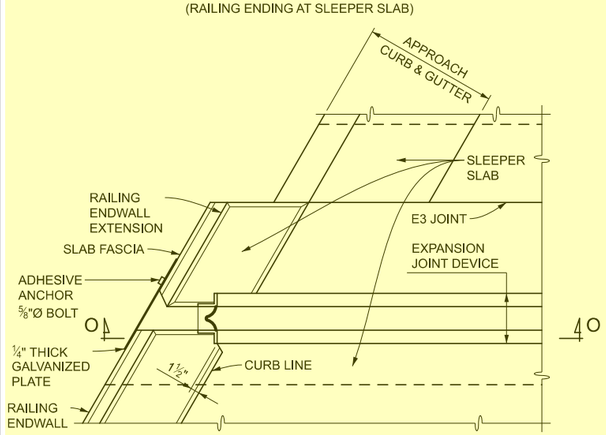


PLAN AT SLEEPER SLAB WITH RAILING ENDWALL

(RAILING ENDING AT SLEEPER SLAB)

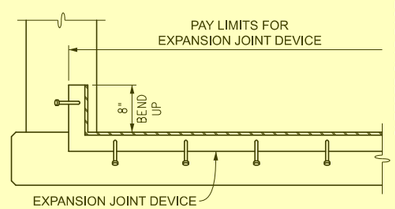


SECTION O - O

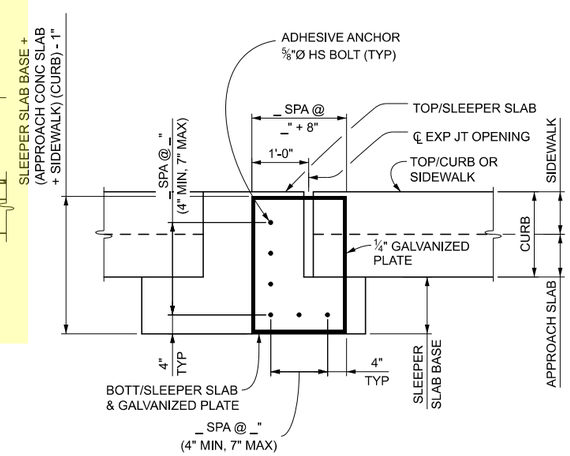


END PLATE DETAIL

(SLEEPER SLAB WITH APPROACH SLAB AND SIDEWALK OR CURB)

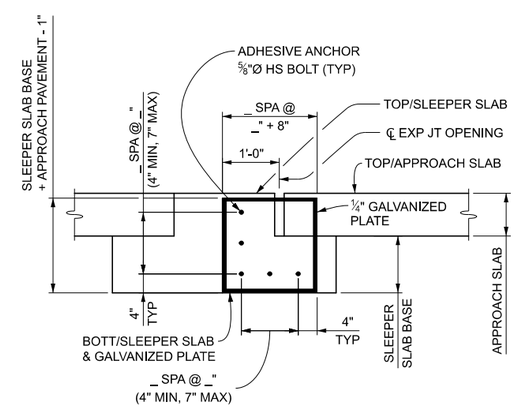


END PLATE DETAIL

(SLEEPER SLAB WITH APPROACH SLAB/PAVEMENT)

| END PLATE TABLE | |
|---|---|
| STRUCTURE NUMBER | SIZE |
| | |
| | |
| | |
| | |
| | |
| | |
| | |
| | |

| FINAL ROW PLAN REVISIONS SUBMITTAL DATE: | | | | | | | |
|---|---|---|---|---|---|---|---|
| NO. | DATE | AUTH | DESCRIPTION | NO. | DATE | AUTH | DESCRIPTION |
| | | | | | | | |
| | | | | | | | |

MDOT Michigan Department of Transportation

NO SCALE

| | | | | |
|---|---|---|---|---|
| | DATE: | CS: | EXPANSION JOINT DETAILS | DRAWING / SHEET |
| | DESIGN UNIT: | JN: | EJ3AE (07-25-2022) | SECT |
| FILE: | TSC: | | | |

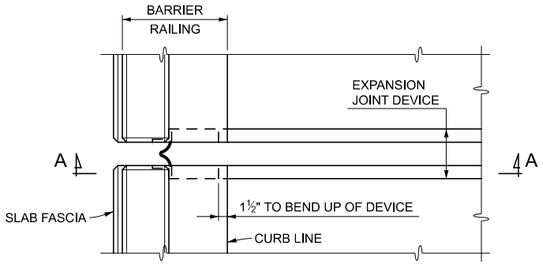


PLAN AT BARRIER RAILING TYPE 4 & TYPE 5

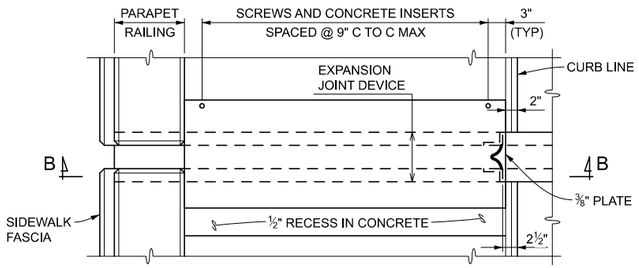


PLAN AT PARAPET RAILING WITH SIDEWALK

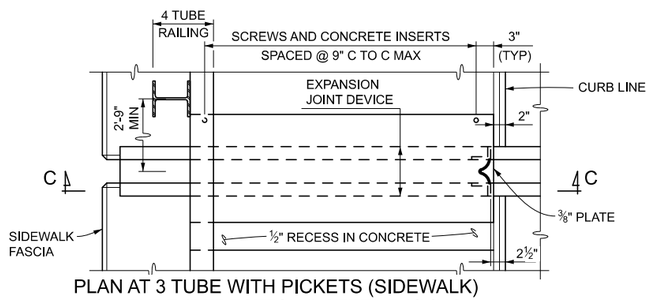


PLAN AT 3 TUBE WITH PICKETS (SIDEWALK)
& 4 TUBE (PEDESTRIAN) STEEL RAILING

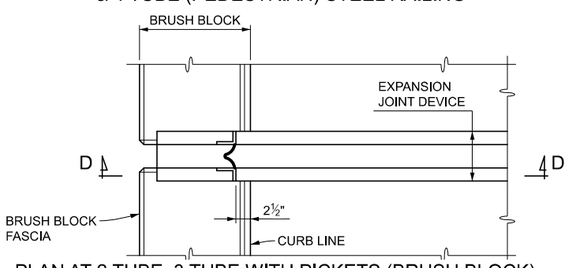


PLAN AT 2 TUBE, 3 TUBE WITH PICKETS (BRUSH BLOCK)
& 4 TUBE (BICYCLE) STEEL RAILING

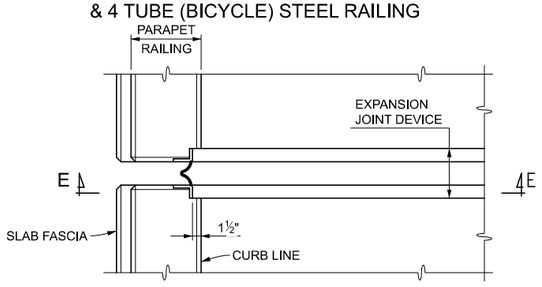


PLAN AT FLUSH MOUNT PARAPET RAILING

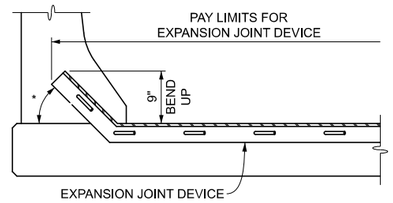


SECTION A - A

* BEND ANCHORAGE UP 45° ALONG ℄ OF EXPANSION JOINT.

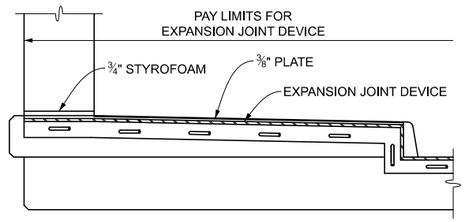


SECTION B - B

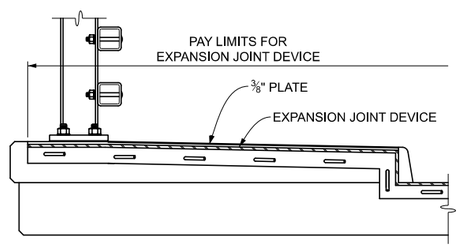


SECTION C - C

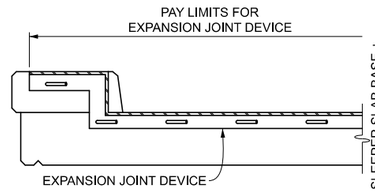


SECTION D - D

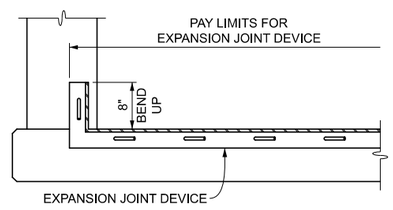


SECTION E - E

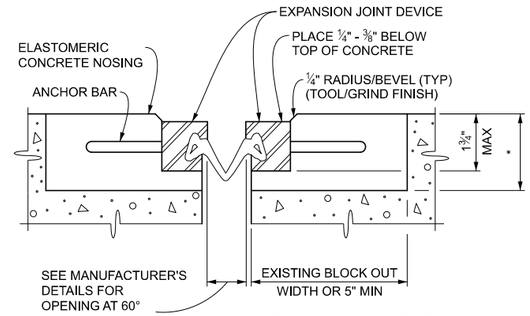


* EXISTING BLOCK OUT DEPTH OR 2" MIN.

## SECTION THROUGH EXPANSION JOINT

THE MINIMUM BLOCK OUT DIMENSIONS SHOWN ARE
APPLICABLE FOR DEVICES WITH STRIP SEALS ONLY.

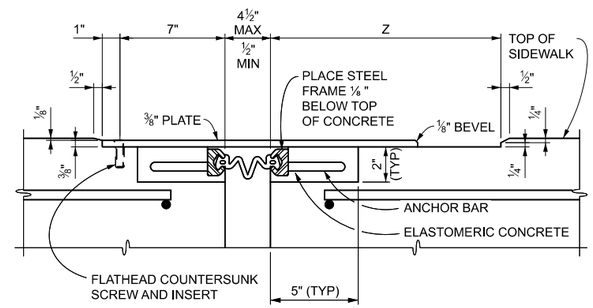


SECTION THROUGH EXPANSION JOINT
AND COVER PLATE

| TOTAL TRAVEL * | PLATE WIDTH | Z |
|---|---|---|
| ≤ 1" | 15" | 7" |
| 1" - 2" | 16" | 8" |
| 2" - 3" | 17" | 9" |
| ≥ 3" | 18" | 10" |

* SEE TABLE FOR MINIMUM TOTAL TRAVEL
ALONG CENTERLINE OF BRIDGE

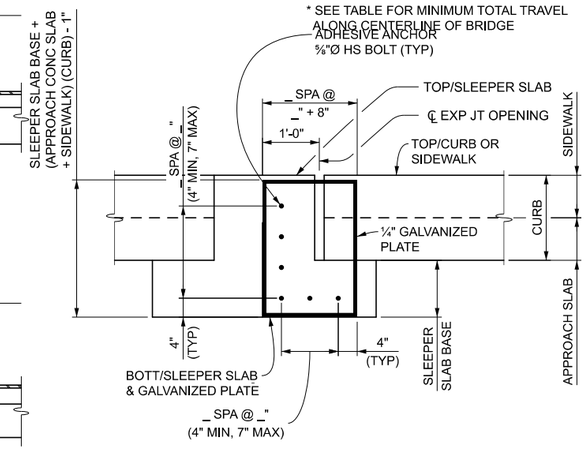


END PLATE DETAIL
(SLEEPER SLAB WITH APPROACH SLAB AND SIDEWALK OR CURB)

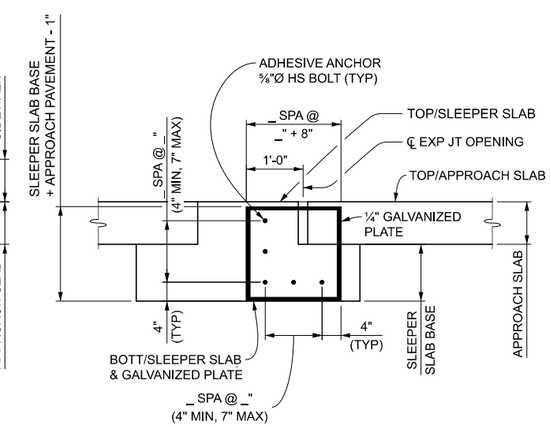


END PLATE DETAIL
(SLEEPER SLAB WITH APPROACH SLAB/PAVEMENT)

## NOTES:

JOINT TYPES

PROVIDE AN EXPANSION JOINT DEVICE THAT INCLUDES A CONTINUOUS NEOPRENE (OR EQUIVALENT) SEAL ACROSS THE DECK. UNLESS OTHERWISE NOTED, ANY OF THE DEVICES LISTED BELOW THAT MEET THAT ARE SUITABLE TO MEET THE TOTAL MOVEMENT NOTED ON THE PLANS ARE PERMITTED:

| DEVICE | MANUFACTURER |
|---|---|
| STEELFLEX-SSE2 | D.S. BROWN CO.. |
| WABO STRIP SEAL - TYPE E | WATSON-BOWMAN & ACME, INC. |

DETAILS AT CURBS OR BARRIERS

THE DETAILS ON THIS SHEET SHOW AN APPROVED MEANS OF TERMINATING THE EXPANSION JOINT DEVICE AT CURBS OR BARRIERS. VARIATIONS OR ALTERNATIVE SCHEMES WILL BE CONSIDERED AND MAY BE USED IF APPROVED BY THE ENGINEER.

| STRUCTURE NUMBER | ANGLE OF CROSSING TO NEAREST 10° | LOCATION OF JOINT | MIN. TOT. TRAVEL ALONG CENTERLINE OF BRIDGE * | REQUIRED LENGTH OF EXPANSION JOINT DEVICE |
|---|---|---|---|---|
| | | | | |
| | | | | |
| | | | | |
| | | | | |
| | | | | |
| | | | | |
| | | | | |
| | | | | |
| | | | | |
| | | | | |
| | | | | |
| | | | | |

| QUANTITY | | |
|---|---|---|
| ITEM | UNIT | AMOUNT |
| Expansion Joint Device | Ft | |
| Expansion Joint Device, Cover Plate | Ft | |

| END PLATE TABLE | |
|---|---|
| STRUCTURE NUMBER | SIZE |
| | |
| | |
| | |
| | |
| | |
| | |
| | |
| | |

| FINAL ROW PLAN REVISIONS SUBMITTAL DATE: | | | | | | | |
|---|---|---|---|---|---|---|---|
| NO. | DATE | AUTH | DESCRIPTION | NO. | DATE | AUTH | DESCRIPTION |
| | | | | | | | |
| | | | | | | | |

MDOT Michigan Department of Transportation

NO SCALE

| | | | |
|---|---|---|---|
| | DATE: | CS: | EXPANSION JOINT DETAILS |
| | DESIGN UNIT: | JN: | EJ4R (07-25-2022) |
| FILE: | TSC: | | |

DRAWING | SHEET | SECT

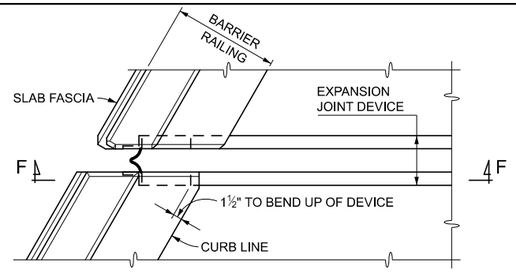


PLAN AT BARRIER RAILING TYPE 4 & TYPE 5

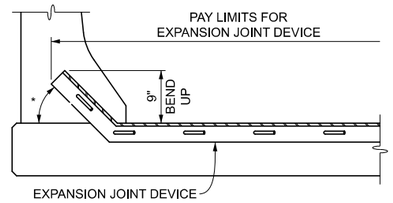


SECTION F - F

* FOR ANGLES OF CROSSING FROM 69° TO 45° INCLUSIVE, BEND ANCHORAGE UP 45° ALONG ℄ OF EXPANSION JOINT. FOR ANGLES OF CROSSING LESS THAN 45°, A SPECIAL ENDING MAY BE REQUIRED.

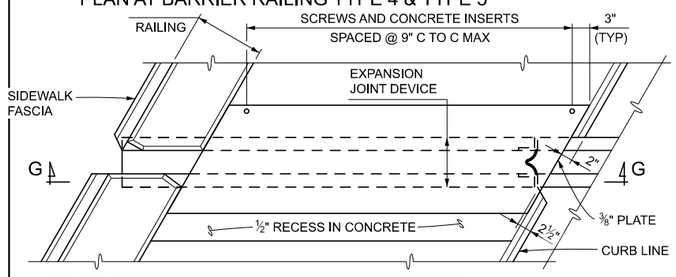


PLAN AT PARAPET RAILING WITH SIDEWALK

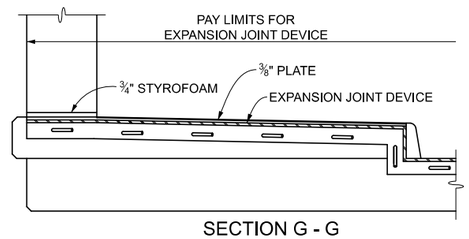


SECTION G - G

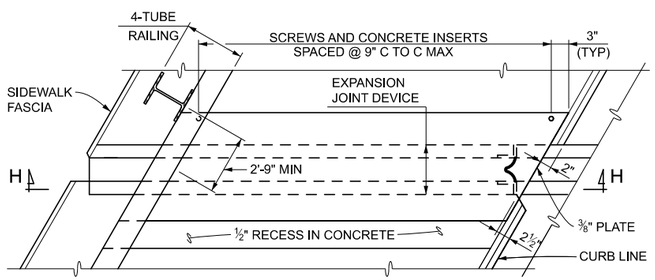


PLAN AT 3 TUBE WITH PICKETS (SIDEWALK)
& 4 TUBE (PEDESTRIAN) STEEL RAILING

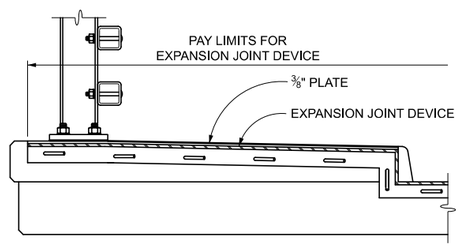


SECTION H - H

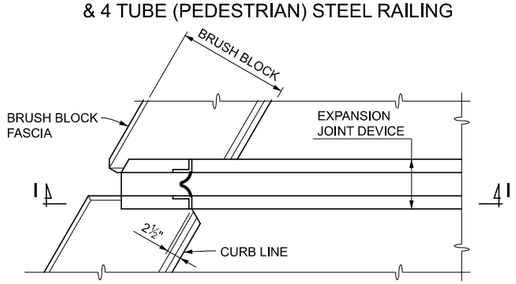


PLAN AT 2 TUBE, 3 TUBE WITH PICKETS (BRUSH BLOCK)
& 4 TUBE (BICYCLE) STEEL RAILING

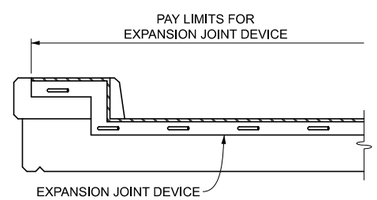


SECTION I - I

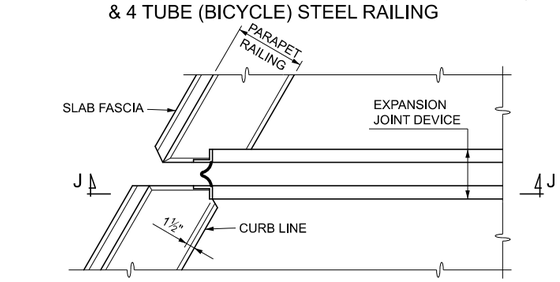


PLAN AT FLUSH MOUNT PARAPET RAILING

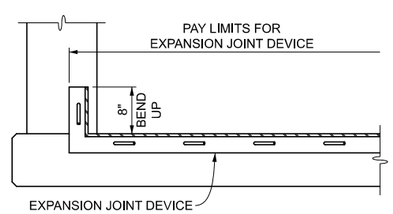


SECTION J - J

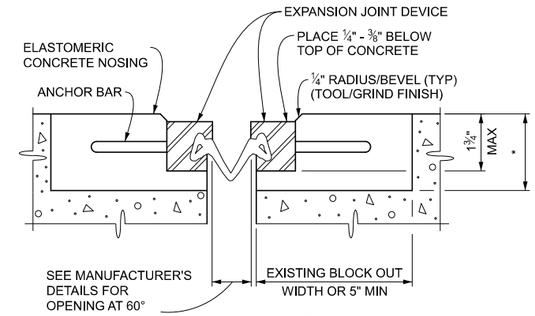


* EXISTING BLOCK OUT DEPTH OR 2" MIN.

## SECTION THROUGH EXPANSION JOINT

THE MINIMUM BLOCK OUT DIMENSIONS SHOWN ARE
APPLICABLE FOR DEVICES WITH STRIP SEALS ONLY.

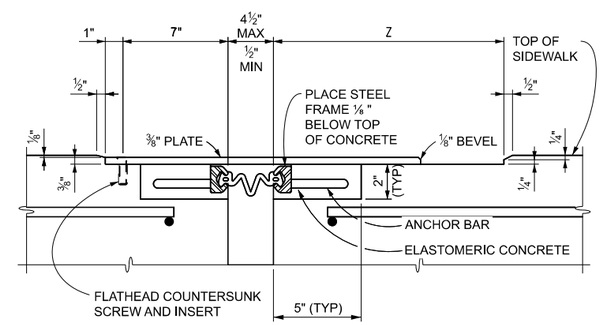


SECTION THROUGH EXPANSION JOINT
AND COVER PLATE

| TOTAL TRAVEL * | PLATE WIDTH | Z |
|---|---|---|
| ≤ 1" | 15" | 7" |
| 1" - 2" | 16" | 8" |
| 2" - 3" | 17" | 9" |
| ≥ 3" | 18" | 10" |

* SEE TABLE FOR MINIMUM TOTAL TRAVEL
ALONG CENTERLINE OF BRIDGE

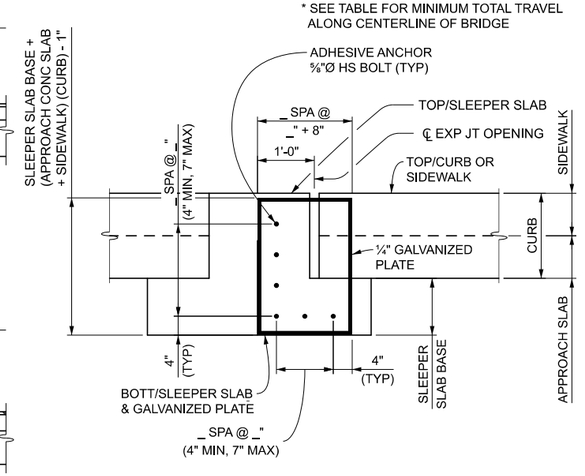


END PLATE DETAIL
(SLEEPER SLAB WITH APPROACH SLAB AND SIDEWALK OR CURB)

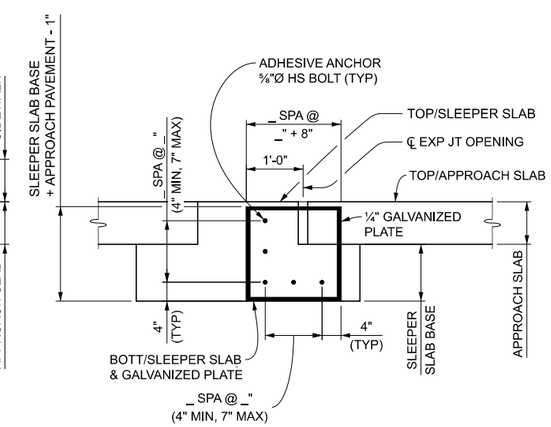


END PLATE DETAIL
(SLEEPER SLAB WITH APPROACH SLAB/PAVEMENT)

## NOTES:

JOINT TYPES

PROVIDE AN EXPANSION JOINT DEVICE THAT INCLUDES A CONTINUOUS NEOPRENE (OR EQUIVALENT) SEAL ACROSS THE DECK. UNLESS OTHERWISE NOTED, ANY OF THE DEVICES LISTED BELOW THAT MEET THAT ARE SUITABLE TO MEET THE TOTAL MOVEMENT NOTED ON THE PLANS ARE PERMITTED:

| DEVICE | MANUFACTURER |
|---|---|
| STEELFLEX-SSE2 | D.S. BROWN CO.. |
| WABO STRIP SEAL - TYPE E | WATSON-BOWMAN & ACME, INC. |

DETAILS AT CURBS OR BARRIERS

THE DETAILS ON THIS SHEET SHOW AN APPROVED MEANS OF TERMINATING THE EXPANSION JOINT DEVICE AT CURBS OR BARRIERS. VARIATIONS OR ALTERNATIVE SCHEMES WILL BE CONSIDERED AND MAY BE USED IF APPROVED BY THE ENGINEER.

| STRUCTURE NUMBER | ANGLE OF CROSSING TO NEAREST 10° | LOCATION OF JOINT | MIN. TOT. TRAVEL ALONG CENTERLINE OF BRIDGE * | REQUIRED LENGTH OF EXPANSION JOINT DEVICE |
|---|---|---|---|---|
| | | | | |
| | | | | |
| | | | | |
| | | | | |
| | | | | |
| | | | | |
| | | | | |
| | | | | |
| | | | | |
| | | | | |
| | | | | |

| QUANTITY | | |
|---|---|---|
| ITEM | UNIT | AMOUNT |
| Expansion Joint Device | Ft | |
| Expansion Joint Device, Cover Plate | Ft | |

| END PLATE TABLE | |
|---|---|
| STRUCTURE NUMBER | SIZE |
| | |
| | |
| | |
| | |
| | |
| | |
| | |
| | |

| FINAL ROW PLAN REVISIONS SUBMITTAL DATE: | | | | | | | |
|---|---|---|---|---|---|---|---|
| NO. | DATE | AUTH | DESCRIPTION | NO. | DATE | AUTH | DESCRIPTION |
| | | | | | | | |
| | | | | | | | |

MDOT Michigan Department of Transportation

NO SCALE

| | | | | | |
|---|---|---|---|---|---|
| | DATE: | CS: | EXPANSION JOINT DETAILS | DRAWING | SHEET |
| | DESIGN UNIT: | JN: | EJ4R (07-25-2022) | | SECT |
| FILE: | TSC: | | | | |

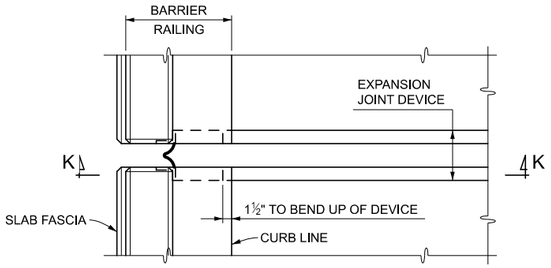


PLAN AT BARRIER RAILING TYPE 6 & TYPE 7

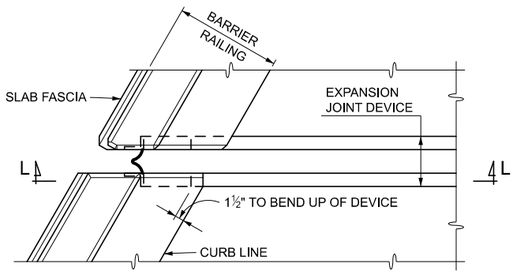


PLAN AT BARRIER RAILING TYPE 6 & TYPE 7

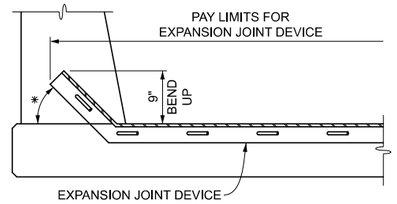


SECTION K - K

* BEND ANCHORAGE UP 45° ALONG ℄ OF EXPANSION JOINT.

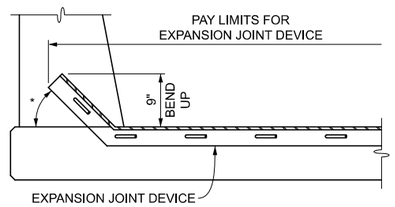


SECTION L - L

* FOR ANGLES OF CROSSING FROM 69° TO 45° INCLUSIVE, BEND ANCHORAGE UP 45° ALONG ℄ OF EXPANSION JOINT. FOR ANGLES OF CROSSING LESS THAN 45°, A SPECIAL ENDING MAY BE REQUIRED.

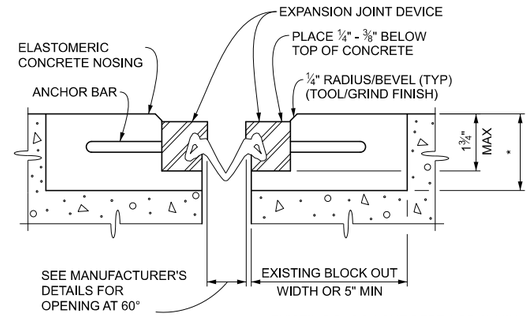


* EXISTING BLOCK OUT DEPTH OR 2" MIN.

## SECTION THROUGH EXPANSION JOINT

THE MINIMUM BLOCK OUT DIMENSIONS SHOWN ARE APPLICABLE FOR DEVICES WITH STRIP SEALS ONLY.

## NOTES:

JOINT TYPES

PROVIDE AN EXPANSION JOINT DEVICE THAT INCLUDES A CONTINUOUS NEOPRENE (OR EQUIVALENT) SEAL ACROSS THE DECK. UNLESS OTHERWISE NOTED, ANY OF THE DEVICES LISTED BELOW THAT MEET THAT ARE SUITABLE TO MEET THE TOTAL MOVEMENT NOTED ON THE PLANS ARE PERMITTED:

| DEVICE | MANUFACTURER |
|---|---|
| STEELFLEX-SSE2 | D.S. BROWN CO.. |
| WABO STRIP SEAL - TYPE E | WATSON-BOWMAN & ACME, INC. |

DETAILS AT CURBS OR BARRIERS

THE DETAILS ON THIS SHEET SHOW AN APPROVED MEANS OF TERMINATING THE EXPANSION JOINT DEVICE AT CURBS OR BARRIERS. VARIATIONS OR ALTERNATIVE SCHEMES WILL BE CONSIDERED AND MAY BE USED IF APPROVED BY THE ENGINEER.

| STRUCTURE NUMBER | ANGLE OF CROSSING TO NEAREST 10° | LOCATION OF JOINT | MIN. TOT. TRAVEL ALONG CENTERLINE OF BRIDGE * | REQUIRED LENGTH OF EXPANSION JOINT DEVICE |
|---|---|---|---|---|
| | | | | |
| | | | | |
| | | | | |
| | | | | |
| | | | | |
| | | | | |
| | | | | |
| | | | | |
| | | | | |
| | | | | |
| | | | | |
| | | | | |

| QUANTITY | | |
|---|---|---|
| ITEM | UNIT | AMOUNT |
| Expansion Joint Device | Ft | |
| Expansion Joint Device, Cover Plate | Ft | |

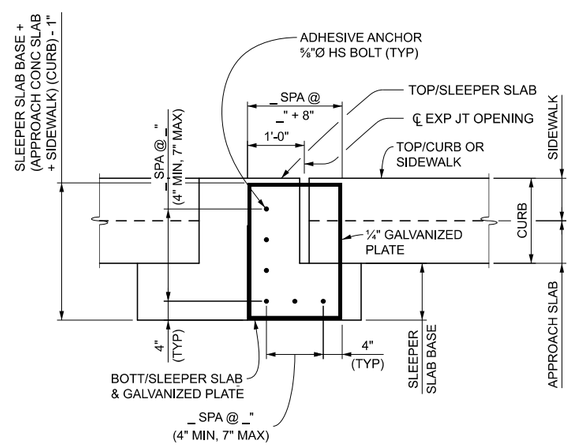


END PLATE DETAIL
(SLEEPER SLAB WITH APPROACH SLAB AND SIDEWALK OR CURB)

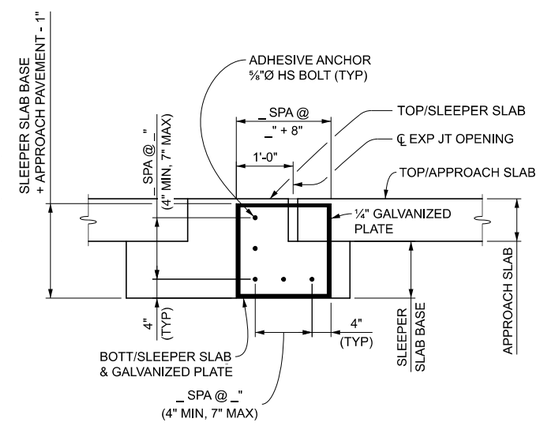


END PLATE DETAIL
(SLEEPER SLAB WITH APPROACH SLAB/PAVEMENT)

| END PLATE TABLE | |
|---|---|
| STRUCTURE NUMBER | SIZE |
| | |
| | |
| | |
| | |
| | |
| | |
| | |
| | |

| FINAL ROW PLAN REVISIONS SUBMITTAL DATE: | | | | | | | |
|---|---|---|---|---|---|---|---|
| NO. | DATE | AUTH | DESCRIPTION | NO. | DATE | AUTH | DESCRIPTION |
| | | | | | | | |
| | | | | | | | |

MDOT Michigan Department of Transportation

NO SCALE

| | | | | | |
|---|---|---|---|---|---|
| | DATE: | CS: | EXPANSION JOINT DETAILS | DRAWING | SHEET |
| | DESIGN UNIT: | JN: | EJ4R (07-25-2022) | | SECT |
| FILE: | TSC: | | | | |

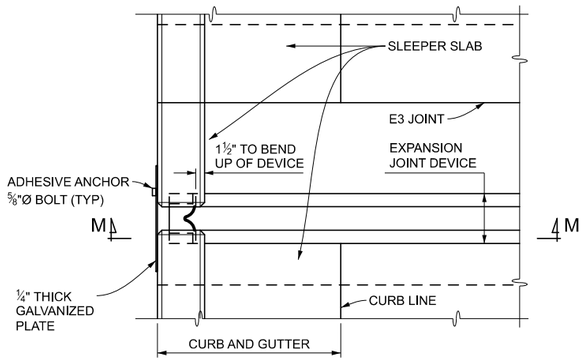


PLAN AT SLEEPER SLAB WITH CURB & GUTTER

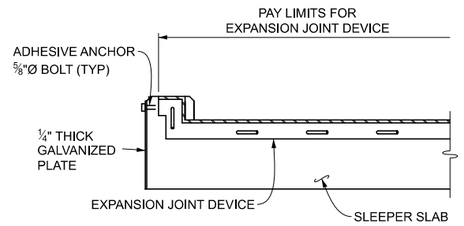


SECTION M - M

(MODIFY CURB HEIGHT/DETAIL AS NECESSARY)

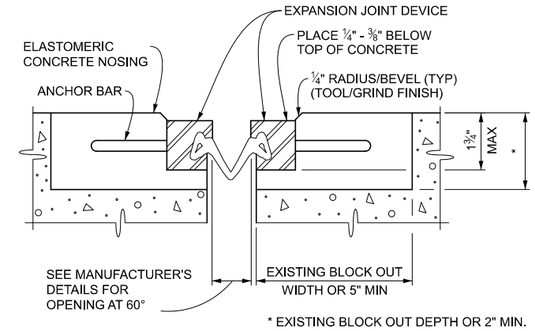


## SECTION THROUGH EXPANSION JOINT

THE MINIMUM BLOCK OUT DIMENSIONS SHOWN ARE APPLICABLE FOR DEVICES WITH STRIP SEALS ONLY.

## NOTES:

JOINT TYPES

PROVIDE AN EXPANSION JOINT DEVICE THAT INCLUDES A CONTINUOUS NEOPRENE (OR EQUIVALENT) SEAL ACROSS THE DECK. UNLESS OTHERWISE NOTED, ANY OF THE DEVICES LISTED BELOW THAT MEET THAT ARE SUITABLE TO MEET THE TOTAL MOVEMENT NOTED ON THE PLANS ARE PERMITTED:

| DEVICE | MANUFACTURER |
|---|---|
| STEELFLEX-SSE2 | D.S. BROWN CO.. |
| WABO STRIP SEAL - TYPE E | WATSON-BOWMAN & ACME, INC. |

DETAILS AT CURBS OR BARRIERS

THE DETAILS ON THIS SHEET SHOW AN APPROVED MEANS OF TERMINATING THE EXPANSION JOINT DEVICE AT CURBS OR BARRIERS. VARIATIONS OR ALTERNATIVE SCHEMES WILL BE CONSIDERED AND MAY BE USED IF APPROVED BY THE ENGINEER.

| STRUCTURE NUMBER | ANGLE OF CROSSING TO NEAREST 10° | LOCATION OF JOINT | MIN. TOT. TRAVEL ALONG CENTERLINE OF BRIDGE * | REQUIRED LENGTH OF EXPANSION JOINT DEVICE |
|---|---|---|---|---|
| | | | | |
| | | | | |
| | | | | |
| | | | | |
| | | | | |
| | | | | |
| | | | | |
| | | | | |
| | | | | |
| | | | | |
| | | | | |
| | | | | |

| QUANTITY | | |
|---|---|---|
| ITEM | UNIT | AMOUNT |
| Expansion Joint Device | Ft | |
| Expansion Joint Device, Cover Plate | Ft | |

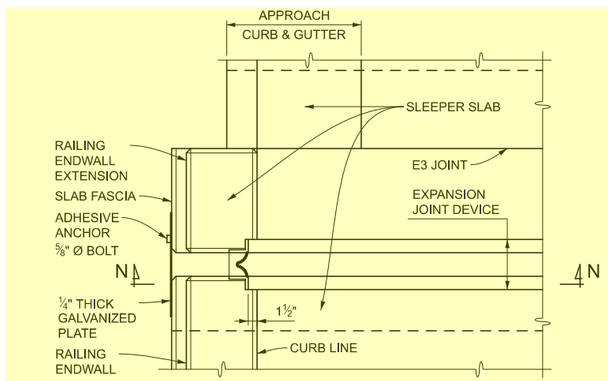


PLAN AT SLEEPER SLAB WITH RAILING ENDWALL

(RAILING ENDING AT SLEEPER SLAB)

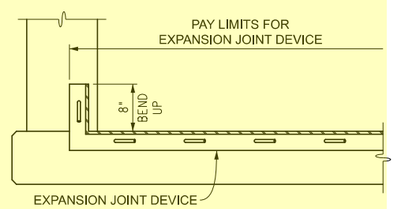


SECTION N - N

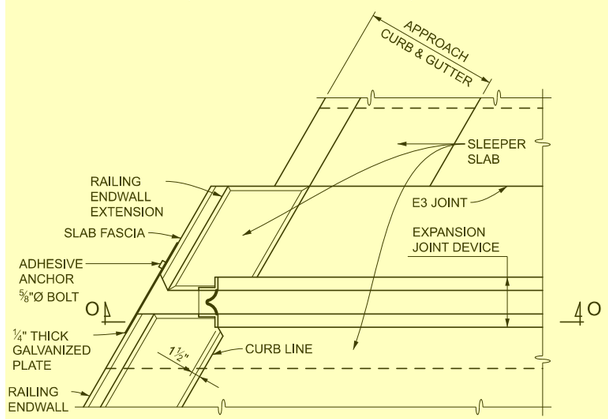


PLAN AT SLEEPER SLAB WITH RAILING ENDWALL

(RAILING ENDING AT SLEEPER SLAB)

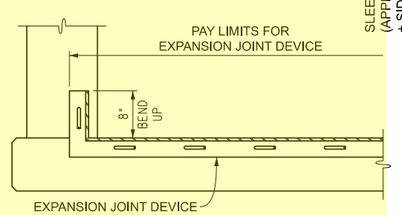


SECTION O - O

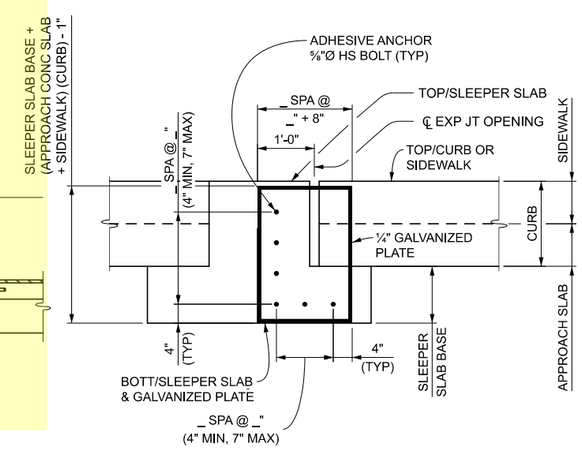


END PLATE DETAIL

(SLEEPER SLAB WITH APPROACH SLAB AND SIDEWALK OR CURB)

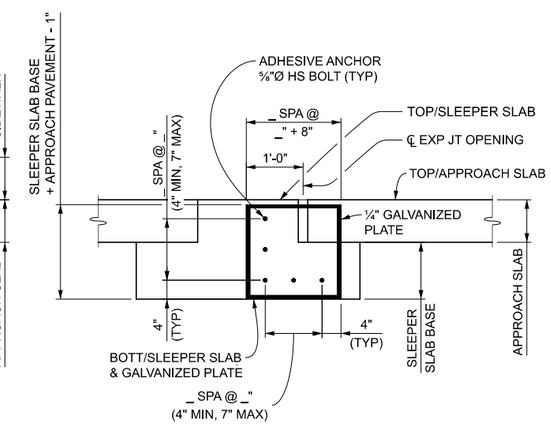


END PLATE DETAIL

(SLEEPER SLAB WITH APPROACH SLAB/PAVEMENT)

| END PLATE TABLE | |
|---|---|
| STRUCTURE NUMBER | SIZE |
| | |
| | |
| | |
| | |
| | |
| | |
| | |
| | |

| FINAL ROW PLAN REVISIONS SUBMITTAL DATE: | | | | | | | |
|---|---|---|---|---|---|---|---|
| NO. | DATE | AUTH | DESCRIPTION | NO. | DATE | AUTH | DESCRIPTION |
| | | | | | | | |
| | | | | | | | |

MDOT Michigan Department of Transportation

NO SCALE

| | | | | | |
|---|---|---|---|---|---|
| | DATE: | CS: | EXPANSION JOINT DETAILS | DRAWING | SHEET |
| | DESIGN UNIT: | JN: | EJ4R (07-25-2022) | | SECT |
| FILE: | TSC: | | | | |

# MICHIGAN DESIGN MANUAL
# ROAD DESIGN

## APPENDIX 6-A
(revised 7-25-2022)

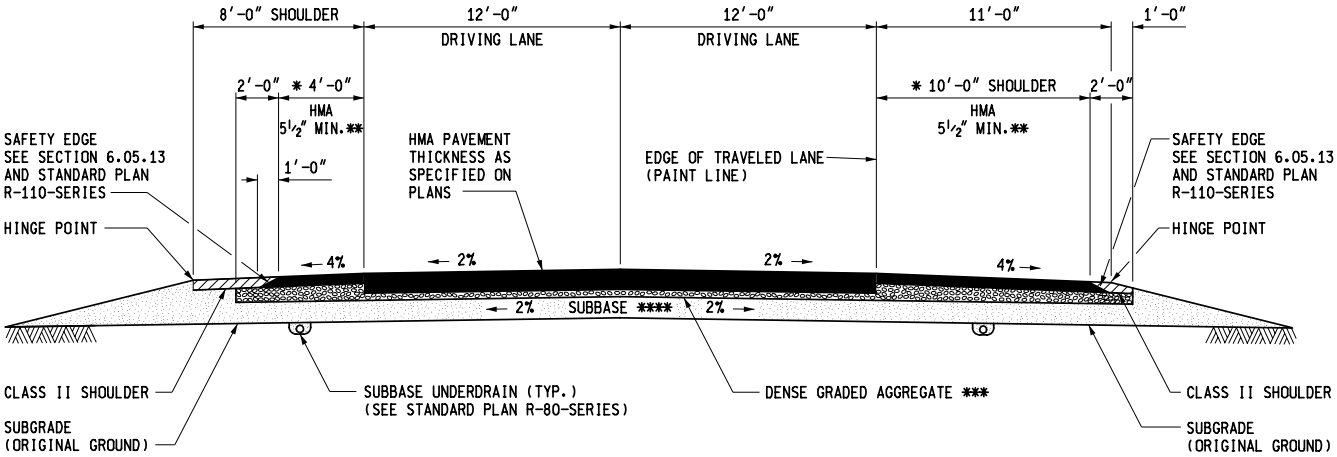


* SEE CHAPTER 3, APPENDIX 3A FOR LEFT (MEDIAN) AND RIGHT (OUTSIDE) SHOULDER WIDTH GUIDELINES.

** SHOULDER THICKNESS DETERMINATION MUST ALSO FOLLOW OTHER DEPARTMENT GUIDELINES INCLUDING THE HMA MIXTURE AND SELECTION GUIDELINES.

*** TYPICALLY, 6″ DENSE GRADED AGGREGATE OR 16″ OPEN-GRADED DRAINAGE COURSE IN METRO REGION.

**** TYPICALLY, 18″ SAND SUBBASE OR 8″ SAND SUBBASE IN METRO REGION.

### RURAL FREEWAY WITH HMA PAVEMENT
(SHOWN WITH OPEN DRAINAGE AND PARTIAL DEPTH SHOULDERS)

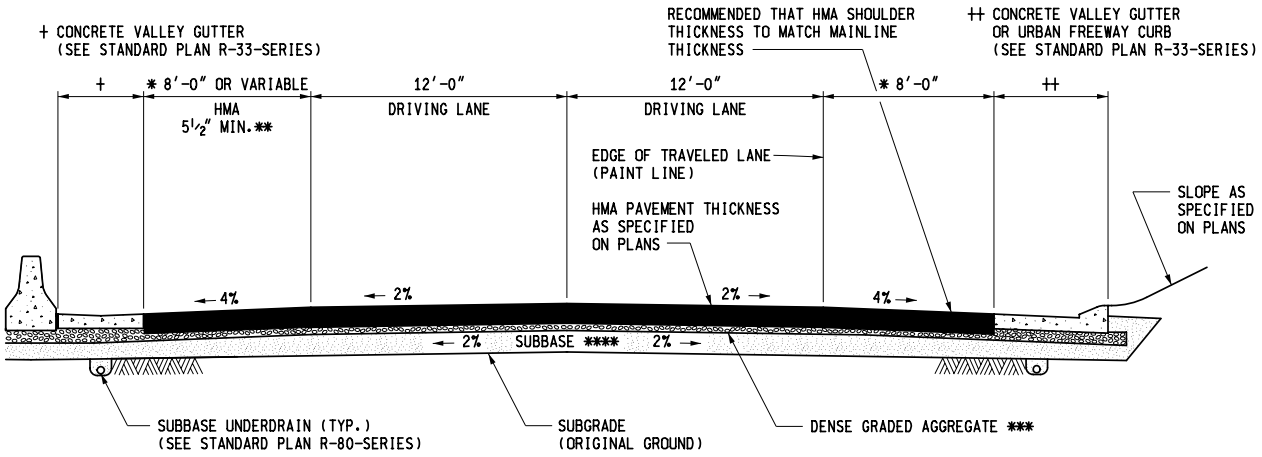


* SEE CHAPTER 3, APPENDIX 3A FOR LEFT (MEDIAN) AND RIGHT (OUTSIDE) SHOULDER WIDTH GUIDELINES.

** SHOULDER THICKNESS DETERMINATION MUST ALSO FOLLOW OTHER DEPARTMENT GUIDELINES INCLUDING THE HMA MIXTURE AND SELECTION GUIDELINES.

*** TYPICALLY, 6″ DENSE GRADED AGGREGATE OR 16″ OPEN-GRADED DRAINAGE COURSE IN METRO REGION.

**** TYPICALLY, 18″ SAND SUBBASE OR 8″ SAND SUBBASE IN METRO REGION.

### URBAN FREEWAY WITH HMA PAVEMENT
(SHOWN WITH ENCLOSED DRAINAGE SYSTEM, CONCRETE MEDIAN BARRIER INSIDE AND URBAN FREEWAY CURB OUTSIDE)

## APPENDIX 6-A

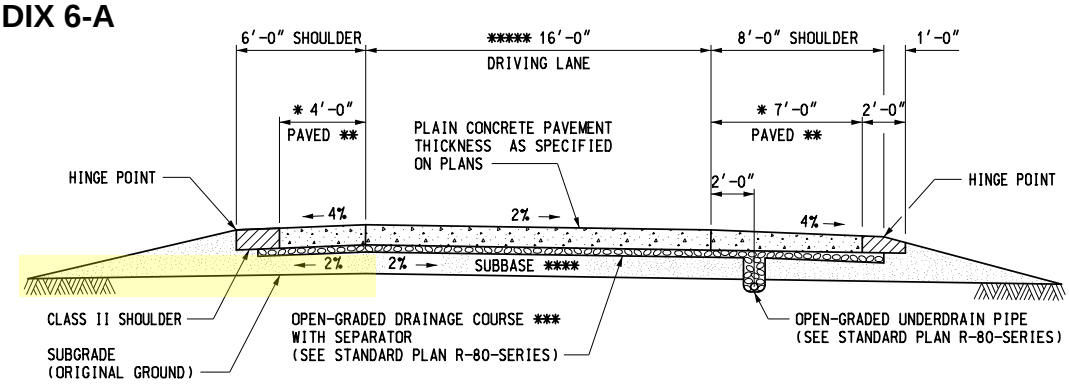


* SEE CHAPTER 3, APPENDIX 3A FOR LEFT (INSIDE) AND RIGHT (OUTSIDE) SHOULDER WIDTH GUIDELINES.

** SHOULDERS CAN BE HMA OR PLAIN CONCRETE. SEE FREEWAY RAMP SHOULDER OPTIONS BELOW.

*** TYPICALLY, 6" OPEN-GRADED DRAINAGE COURSE OR 16" OPEN-GRADED DRAINAGE COURSE IN METRO REGION.

**** TYPICALLY, 10" SAND SUBBASE OR N/A IN METRO REGION.

***** FOR LOCATION OF LONGITUDINAL JOINT, SEE STANDARD PLAN R-42-SERIES.

### RAMP WITH PLAIN CONCRETE PAVEMENT (RURAL AND URBAN)

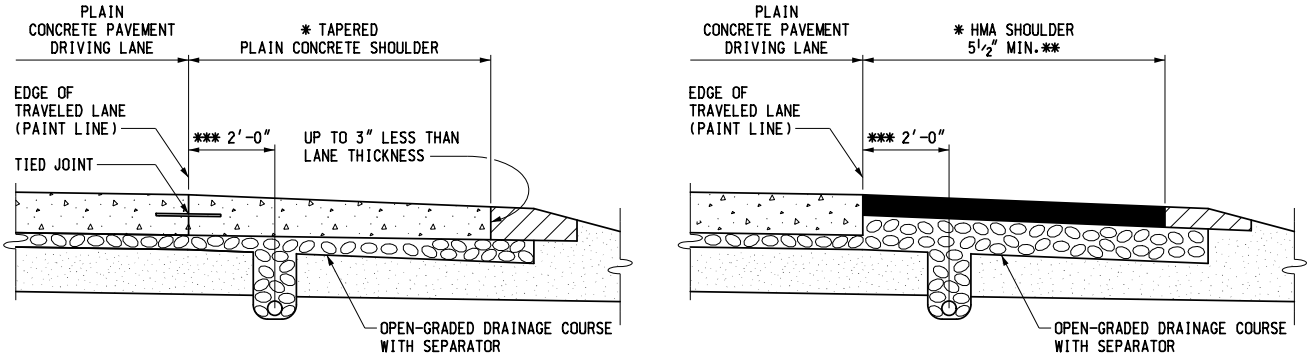


* SEE CHAPTER 3, APPENDIX 3A FOR LEFT (MEDIAN) AND RIGHT (OUTSIDE) SHOULDER WIDTH GUIDELINES.

** SHOULDER THICKNESS DETERMINATION MUST ALSO FOLLOW OTHER DEPARTMENT GUIDELINES INCLUDING THE HMA MIXTURE AND SELECTION GUIDELINES.

*** THE UNDERDRAIN OFFSET IS FROM THE EDGE OF TRAVELED LANE (PAINT LINE).

### FREEWAY RAMP SHOULDER OPTIONS

(OUTSIDE SHOULDER SHOWN WITH PARTIAL DEPTH SHOULDERS)

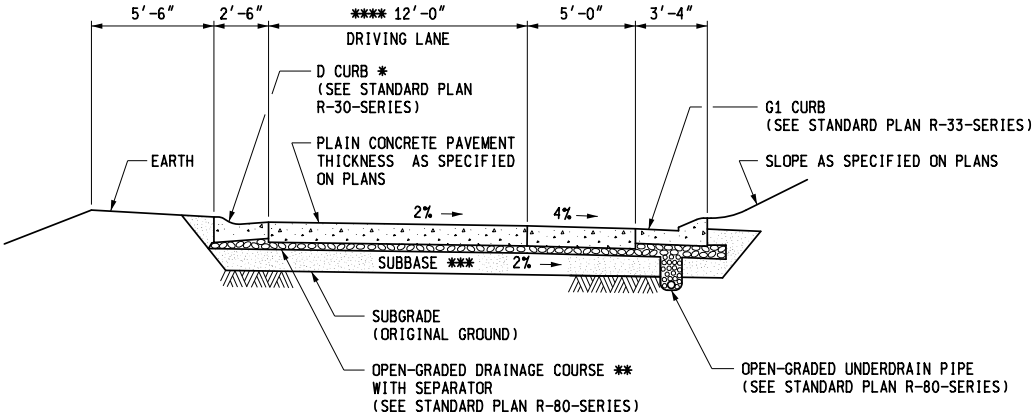


* IF A SLIP RAMP APPROACHES A SLIP RAMP STRUCTURE, TRANSITION TO G1 OR G2 CURB TO MATCH BRIDGE SHOULDER WIDTH.

** TYPICALLY, 6" OPEN-GRADED DRAINAGE COURSE OR 16" OPEN-GRADED DRAINAGE COURSE IN METRO REGION.

*** TYPICALLY, 10" SAND SUBBASE OR N/A IN METRO REGION.

**** FOR LOCATION OF LONGITUDINAL JOINT, SEE STANDARD PLAN R-42-SERIES.

### URBAN SLIP RAMP WITH PLAIN CONCRETE PAVEMENT

## APPENDIX 6-A

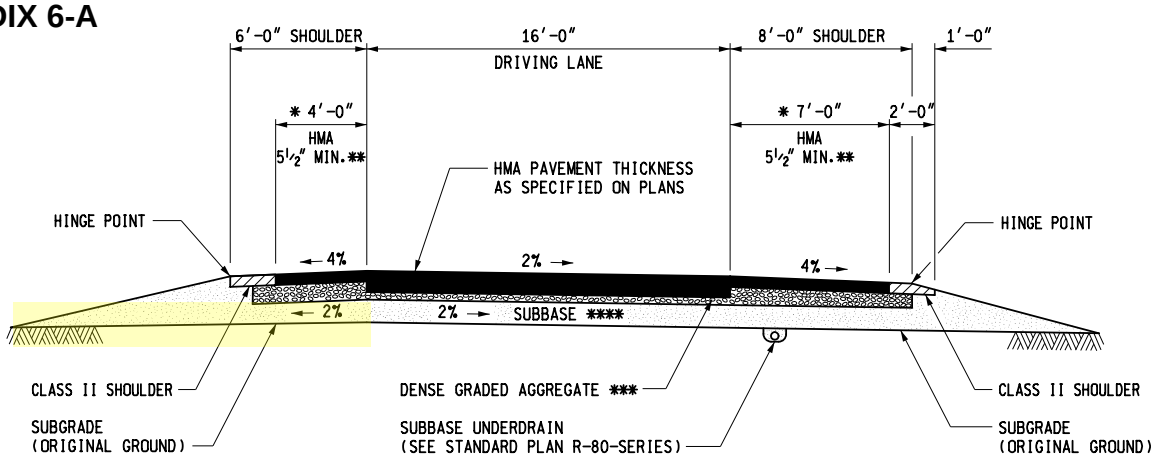


* SEE CHAPTER 3, APPENDIX 3A FOR LEFT (INSIDE) AND RIGHT (OUTSIDE) SHOULDER WIDTH GUIDELINES.

** SHOULDER THICKNESS DETERMINATION MUST ALSO FOLLOW OTHER DEPARTMENT GUIDELINES INCLUDING THE HMA MIXTURE AND SELECTION GUIDELINES.

*** TYPICALLY, 6″ DENSE GRADED AGGREGATE OR 16″ OPEN-GRADED DRAINAGE COURSE IN METRO REGION.

**** TYPICALLY, 18″ SAND SUBBASE OR 8″ SAND SUBBASE IN METRO REGION.

### RAMP WITH HMA PAVEMENT
### (RURAL AND URBAN)

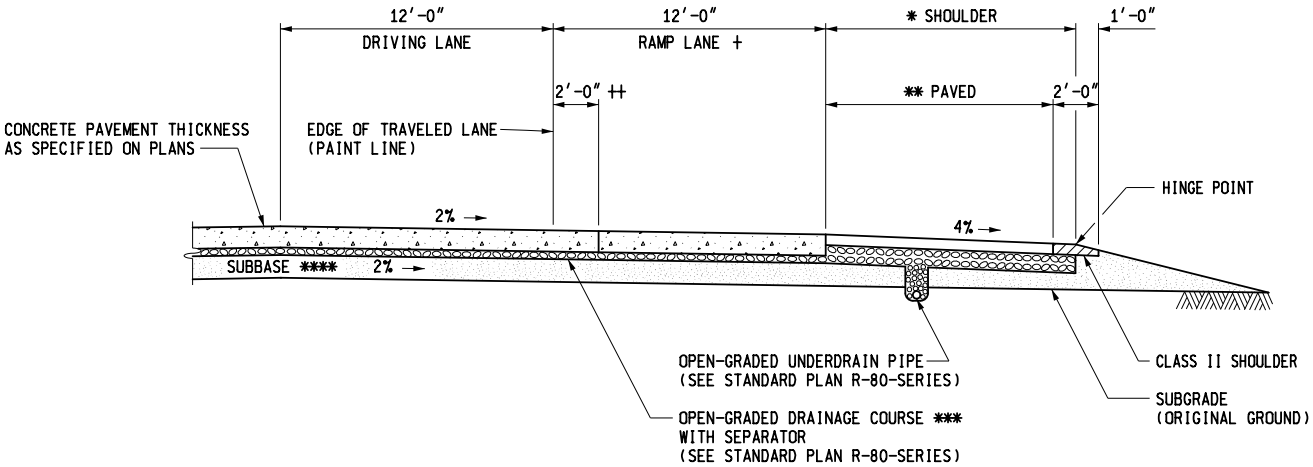


* SEE CHAPTER 3, APPENDIX 3A FOR LEFT (MEDIAN) AND RIGHT (OUTSIDE) SHOULDER WIDTH GUIDELINES.

** IF WIDENED SLAB, FREEWAY SHOULDERS CAN BE HMA OR PLAIN CONCRETE. SEE WIDENED SLAB FREEWAY SHOULDER OPTIONS.

*** TYPICALLY, 6″ OPEN-GRADED DRAINAGE COURSE OR 16″ OPEN-GRADED DRAINAGE COURSE IN METRO REGION.

**** TYPICALLY, 10″ SAND SUBBASE OR N/A IN METRO REGION.

### FREEWAY WITH PLAIN CONCRETE PAVEMENT AND RAMP LANE
### (RURAL AND URBAN)

\+ RAMP (ACCELERATION / DECELERATION) LANES ARE DESIGNED ACCORDING TO THE DEPARTMENT'S GEOMETRIC DESIGN GUIDES. THE RIGHT EDGE OF THE FREEWAY DRIVING LANE IS CONSIDERED TO BE THE EDGE OF TRAVELED LANE (PAINT LINE) WHEN REFERRING TO THE GEOMETRIC DESIGN GUIDELINES.

++ SLAB EXTENSION 0′-0″ TO 2′-0″. SEE SECTION 604.04F(6) FOR AUXILARY LANES.

# MICHIGAN DESIGN MANUAL
# ROAD DESIGN

## APPENDIX 6-A

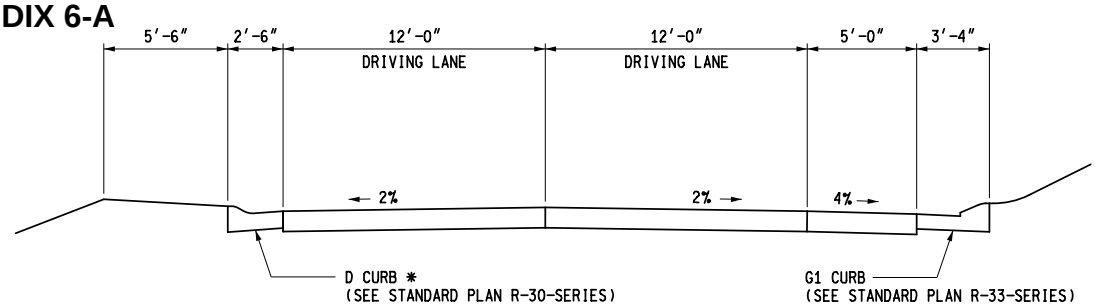


✱ IF A SLIP RAMP APPROACHES A SLIP RAMP STRUCTURE, TRANSITION TO G1 OR G2 CURB TO MATCH BRIDGE SHOULDER WIDTH.

### DIMENSIONS FOR A TWO LANE SLIP RAMP

(SEE SINGLE LANE SLIP RAMP DRAWING OF APPROPRIATE PAVEMENT TYPE FOR OTHER DETAILS)

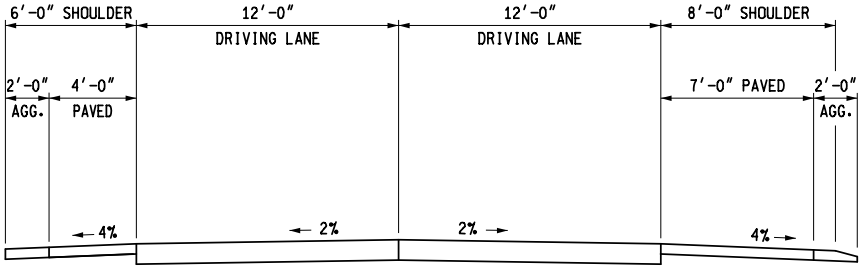


### DIMENSIONS FOR A TWO LANE RAMP (RURAL AND URBAN)

(SEE SINGLE LANE RAMP DRAWING OF APPROPRIATE PAVEMENT TYPE FOR OTHER DETAILS)

NOTES:

THIS GUIDE FOR FREEWAYS SETS GUIDELINES FOR FREEWAY CROSS SECTIONS. THE ACTUAL DESIGN AND MATERIAL USED TO CONSTRUCT THE COMPLETE ROADWAY SECTION WILL BE ACCORDING TO THE PLANS AND CURRENT SPECIFICATIONS.

SEE STANDARD PLAN R-107-SERIES FOR CROSS SLOPES ON SUPERELEVATED PAVEMENTS.

SHOULDER CORRUGATION CROSS-SECTIONS AND LOCATION SHALL BE AS DETAILED ON STANDARD PLAN R-112-SERIES.

FOR URBAN ROADWAYS, IF THE CURB & GUTTER IS RESTRAINED ON THE OUTSIDE BY A RETAINING WALL, ABUTMENT, OR SLOPE PAVING HEADER, PLACE A 1″ EXPANSION JOINT FILLER BETWEEN THE CURB & GUTTER OR VALLEY GUTTER AND THE STRUCTURE. SEE STANDARD PLAN R-33-SERIES.

WHEN CONCRETE SHOULDERS ARE CAST SEPARATELY FROM MAINLINE CONCRETE PAVEMENT, A KEYWAY MAY BE USED TO FACILITATE THE PLACING OF LANE TIES. WHEN A KEYWAY GROOVE IS USED, IT SHALL BE CONTINUOUS AND UNIFORM.

THE LOCATION OF TRANSVERSE JOINTS IN CONCRETE SHOULDERS SHALL MATCH THE LOCATION OF ADJACENT TRANSVERSE PAVEMENT JOINTS.

CORRESPONDING TRANSVERSE JOINTS IN PLAIN CONCRETE SHOULDERS TIED TO PLAIN CONCRETE PAVEMENT SHALL BE (C3p) SHOULDER WITH (Cp) PAVEMENT, (C4) SHOULDER WITH (C2) PAVEMENT, (E4) SHOULDER WITH (E2) PAVEMENT, AND (E3) BEING THE SAME IN BOTH SHOULDER AND PAVEMENT.

SEE STANDARD PLAN R-39-SERIES FOR DETAILS OF TRANSVERSE PAVEMENT JOINTS.

ALL CONCRETE SHOULDER SLABS ADJACENT TO BRIDGE STRUCTURES SHALL BE REINFORCED AS SPECIFIED ON STANDARD PLAN R-45-SERIES.

**MICHIGAN DESIGN MANUAL**
**ROAD DESIGN**

# CHAPTER 9

## INDEX

## UTILITIES


**9.01 REFERENCES**

**9.02 MUNICIPAL AND PRIVATE UTILITY RELOCATION POLICIES AND PROCEDURES**

9.02.01 Municipal Utility Relocation Policy
- A. Definitions
- B. General Information
- C. Municipal Utility Costs and Betterments
- D. Water Main Relocation Studies
- E. Lead (Pb) and Galvanized Steel Water Service Line Replacement

9.02.02 Private Utility Relocation Policy

9.02.03 Including Non-Municipal Utility Work in Contracts
- A. General
- B. Procedures

**9.03 DESIGN GUIDES**

9.03.01 Utility Poles and Light Standards
- A. General Considerations
- B. Authorization
- C. Clarification of Terms Used in Guidelines
- D. Lateral Offset Guideline
- E. Light Standard Details

9.03.02 Municipal Utility Alterations and Notifications of Utility Design Units
- A. Procedures

9.03.03 Utilities on Plans

**CHAPTER 9 UTILITIES INDEX (continued)**

**9.04 MISCELLANEOUS**

9.04.01 Utility Trenches

9.04.02 Section Deleted

9.04.03 Permit Applications

9.04.04 Temporary Utility Hook-Ups

9.04.05 Water Main Appurtenance

9.04.06 Gas Main Relocation Policy

9.04.07 Sanitary Sewers

9.04.08 Sanitary Sewer Service Leads

9.04.09 Subsurface Utility Engineering (SUE)

9.04.10 Lighting Project - Energy Rebate Procedure

**9.05** Section Deleted

# MICHIGAN DESIGN MANUAL
# ROAD DESIGN

# CHAPTER 9

## UTILITIES

**9.01** (revised 7-25-2022)

## REFERENCES

**A. *MDOT Drainage Manual***

**B. *MDOT Utility Coordination Manual***

**C. 49 CFR 645.105**

**D. Public Act 51 of 1951**

**E. Public Act 368 of 1925**

**9.02**

## MUNICIPAL AND PRIVATE UTILITY RELOCATION POLICIES AND PROCEDURES

**9.02.01** (revised 7-25-2022)

**Municipal Utility Relocation Policy**

**A. Definitions**

**Betterment**: any upgrade to an impacted utility beyond what is required to return it to the level of service (both existing and potential) prior to the Department project. Such upgrades may include capacity, materials, or locations. These upgrades are made solely for the benefit of and at the election of the *Municipal Utility*. Note: Upgrades from the existing system necessary to make the system compliant with minimum standards are not considered betterments.

**Department**: The Michigan Department of Transportation (MDOT).

**Direct Conflict**: any *Municipal Utility* requiring an adjustment or alteration to facilitate completion of a Department project (trunkline need).

**9.02.01 (continued)**

**EGLE**: the Michigan Department of Environment, Great Lakes, and Energy.

**Indirect Conflict**: a water main that does not create a direct conflict with a Department project but whose location or condition may compromise the design life of the project, as determined by a municipal utility relocation study performed by the Department and/or a consultant.

**Municipal Convenience:** Municipal utility work included on Department projects that occurs solely at the municipality's discretion. The existing municipal utility does not present a direct or indirect conflict. Typically occurs because of the cost efficiency gained by the municipality because of the work already conducted by the Department (maintenance of traffic, removal of pavement, etc.).

**Municipal Utility**: a *Utility* or service owned, operated, and maintained by a recognized governmental entity within its corporation or jurisdictional boundaries.

**Municipal Utility Design Staff**: Staff located in the *Department's* Road and Municipal Utility Design Unit that are responsible for assisting and fulfilling the responsibilities within this Chapter.

**Permit**: A legal document used to grant permission to private, governmental, and public entities for occupying, constructing, operating, using, or maintaining specified operations or facilities within the state highway ROW.

## 9.02.01 (continued)

### Municipal Utility Relocation Policy

**Right-of-Way (ROW):** Real property or interests therein, acquired, dedicated, or reserved for the construction, operation, and maintenance of a highway under the Department's jurisdiction, in which federal-aid or federal highway funds are or may be involved in any stage of development. This includes lands acquired for scenic areas adjacent to highways, rest areas, roadside parks, scenic turnouts or overlooks, or access to lakes and rivers.

**Utility**: Privately, publicly, or cooperatively owned lines, facilities, and systems for producing, transmitting, or distributing communications, cable television, broadband, power, electricity, light, heat, gas, oil, crude products, water, steam, waste, storm water not connected with highway drainage, and other similar commodities, including fire and police signal systems and street lighting systems, which directly or indirectly serve the public. The term utility also means the utility company inclusive of any wholly owned or controlled subsidiary.

### B. General Information

1. Utility conflicts should be investigated early in plan development. Refer to Chapter 14 Sections 14.16 and 14.26.

2. Counties, townships, cities, and villages will participate in those costs attributable to the trunkline needs pursuant to Public Act 51 of 1951, as amended.

3. Public Act 51 of 1951 requires the Department to bear the cost of removal and replacement of streetlights impacted by a trunkline highway project. Municipalities generally provide street lighting as a public service through agreements with electric utilities. The Department typically coordinates streetlight reimbursement with the electric utility provider rather than the municipality.

## 9.02.01 (continued)

4. Public Act 368 of 1925 grants the Department the authority to provide for the regulation or arrangement of municipal utility installations that interfere with the operation, maintenance, or improvement of state trunklines and regulate the installation of any new facilities on the trunkline right-of-way (ROW). Any modification to municipal utilities within the trunkline ROW requires a permit from the Department.

5. All reconstructed or relocated municipal utilities will, when completed, remain the property of the original owner for all future jurisdictional, maintenance, and operational obligations.

6. The relocation, extension, or alteration of private utilities due to trunkline needs that occupy public ROW by permit or sufferance shall continue to be the responsibility of the utility owners.

7. Work performed by a municipality at project expense shall be subject to prior approval and authorization by the Department.

8. Cost distributions for joint or cooperative storm sewers will continue to be made in accordance with the MDOT Drainage Manual Section 2.5.4. and are excluded from these guidelines.

9. Any agreements with municipalities must be initiated with the municipality through the Trunkline Agreement Engineer.

## 9.02.01 (continued)

### Municipal Utility Relocation Policy

**C. Municipal Utility Costs and Betterments**

Municipal utilities are included in Department projects in any of the following capacities:

- Direct Conflict
- Indirect Conflict
- Municipal Convenience

The nature of the inclusion determines the Department's cost responsibility.

Note that any municipal utilities located outside of the municipality's corporate limits but within Department ROW that are relocated due to trunkline need will be at the municipality's expense (because the municipality is now acting as a private utility), unless it is conclusively determined that the affected utility only serves customers within the municipality boundary.

Additionally, in-kind replacement cost estimates are based on current commercially available materials that comply with the minimum standards.

**Direct Conflict**

*In-Kind Replacement Cost*

Direct Conflicts replaced in-kind will be a project expense. The limits of the replacement are limited to those necessary for the conflict to be mitigated.

## 9.02.01 (continued)

*Betterment Cost*

Any betterments will be at the municipality's expense. The additional expense to be charged to the municipality is calculated as follows:

1. Estimate the expense to replace the utilities in-kind. This is the *in-kind expense*.

2. Calculate the increased cost of materials from the *in-kind expense* due to the betterment. This can be done by soliciting pipe supply vendors. This is the *materials increase*.

3. The *installation cost* for the betterment is calculated as 10% of the *materials increase*.

4. The Preliminary Engineering (PE) due to the betterment is calculated as 15% of the sum of the *materials increase* and *installation cost*.

5. The Construction Engineering (CE) due to the betterment is calculated as 15% of the sum of the *materials increase* and *installation cost*.

6. The total municipal participation for the betterment is the sum of the *materials increase*, *installation cost*, *PE*, and *CE*.

## 9.02.01 (continued)

**Municipal Utility Relocation Policy**

**Indirect Conflict (Exclusive to Water Main)**

The location and condition of water main can be a potential threat to the roadway due to the potential for future maintenance needs. When water main is located within the project limits, the Department will determine if a relocation is necessary to ensure the design life of the project is not compromised. This evaluation is referred to as a water main relocation study.

Every project involving federal funds must have a water main relocation study performed if there is any intention to include utility expenses on the project in addition to those necessary for direct conflicts. Refer to Section 9.02.01D.

*In-Kind Replacement Cost*

Since Indirect Conflicts are not necessary to be relocated for the project to proceed, but which would provide a benefit both to the Department and the municipality, non-federal funding for their inclusion into the project is split 50/50 between the Department and the municipality. This sharing amount holds true even if there is no federal participation.

1. Estimate the non-federal expense to replace the utilities in-kind (typically around 20% of the total replacement cost on projects containing federal funding). This is the *non-federal in-kind expense*.

2. The municipality's share of the *non-federal in-kind expense* is 50%. This is the *50% remainder*.

3. The *PE* is calculated as 15% of the *50% remainder*.

4. The *CE* is calculated as 15% of the *50% remainder*.

## 9.02.01 (continued)

5. The total municipal participation for the in-kind replacement is the sum of the *50% remainder, PE*, and *CE*. This is used as an estimate for the municipality until actual costs are determined using official bid prices and the facility has been installed. Final costs are determined by the construction engineer.

*Betterment Cost*

Any betterments will be at the municipality's expense. The additional expense to be charged to the municipality is calculated as follows:

1. Estimate the non-federal expense to replace the utilities in-kind. This is the *non-federal in-kind expense*.

2. The municipality's share of the *non-federal in-kind expense* is 50%. This is the *50% remainder*.

3. Calculate the increased cost of materials from the *non-federal in-kind expense* due to the betterment. This can be done by soliciting pipe supply vendors. This is the *materials increase*.

4. The *PE* is calculated as 15% of the sum of the *50% remainder* and *materials increase*.

5. The *CE* is calculated as 15% of the sum of the *50% remainder* and *materials increase*.

6. The total municipal participation for the betterment for an Indirect Conflict is the sum of the *50% remainder*, *materials increase*, *PE*, and *CE*. This is used as an estimate for the municipality until actual costs are determined using official bid prices and the facility has been installed. Final costs are determined by the construction engineer.

## 9.02.01 (continued)

### Municipal Utility Relocation Policy

**Municipal Convenience**

Occasionally, a municipality will choose to include work on Department projects as a matter of convenience and to potentially lower their costs by capitalizing on the work that the Department will be conducting (maintenance of traffic, removal of pavement, etc.).

The Project Manager should determine any unique contract requirements for the inclusion of the utility work into the project and allow time in the project schedule for outside agency approvals, agreements, and coordination in plan development and construction administration.

**Municipality Funding Considerations**

If during scoping and the stakeholder engagement process it is determined that municipal utility work will be included using non-project funds, the Project Manager, during project development, should request from the municipality the funding sources being used. It is important that the Contract Services Division (Manager of Construction Contracts) be consulted so that any other requirements are appropriately addressed, such as agency approval prior to the project award, securing of municipal loans, and similar items that may require special attention during the award process.

All non-project funds should be treated as if they were the local agency's funds. Special and unique requirements by other agencies, such as the U.S. Department of Housing and Urban Development and the U.S. Department of Agriculture, should be addressed by the Project Manager before the Plan Review Meeting (PPD Task 3590). The Department follows FHWA requirements in the administration of construction contracts; any deviation should be at the discretion of the Contract Services Division in consultation with the Michigan Division of the FHWA.

## 9.02.01 (continued)

The Department is not a party to any agreement between the municipality and the funding provider.

If Construction Engineering (CE) is being performed by both the Department and the municipality, the payment to the Department from the municipality should be agreed upon and put into the cost participation agreement. This should be a lump sum price. The estimated CE will typically be 15% of the total dollar amount of the utility work (but is not *part* of that total dollar amount). Therefore, if the Department is providing all the CE for the utility work, the starting point for negotiation with the municipality should be 15%. However, if the municipality is providing all the CE for the utility work, a minimum of 5% is still required from the municipality to facilitate the Department's contract administration. A combination of Department and municipality CE will require a negotiation of the appropriate percentages between 5% and 15% based on the expected contribution of each party.

Regardless of which party performs the construction engineering and/or inspections, the Department is responsible for the oversight and only allows the municipality to perform inspections as a courtesy.

When requesting the municipality participation agreement, standard added work language should be used and a deposit may apply. Contact the Trunkline Agreement Engineer for specific deposit amounts. In the event of USDA Rural Development funds, no deposit will apply for Act 51 agencies. When a non-Act 51 agency is using those funds, the department will charge a 100% working capital deposit.

## 9.02.01 (continued)

**Municipal Utility Relocation Policy**

**D. Water Main Relocation Studies**

Prior to considering water main an indirect conflict and utilizing federal funds to relocate, it first must pass a two-part test. The first part is to determine if all the following conditions are met:

- The utility has the right of occupancy in its existing location.
- The utility is municipally owned.
- The utility occupies public right-of-way.
- The utility can be relocated to reduce future impacts.

The second part is to verify that the existing utilities are in one of the following locations:

- Under an existing pavement to be removed.
- Under an existing pavement's area of influence.
- Outside the existing pavement but under a proposed pavement widening.
- Under new roadways.
- Where the proposed grade significantly reduces earth cover or affects accessibility.

If the existing water main passes the two-part test, a water main relocation study must be performed that consists of input and recommendations from the Region/TSC Utility Coordinators and the Department's Municipal Utility Design Staff. The water main relocation study will determine if spending project funding on utility relocations is prudent and in the best interest of the project. Only relocations eligible for federal funding will receive a water main relocation study.

If the existing water main fails the two-part test, federal funds cannot assist in relocating the water main.

## 9.02.01 (continued)

All municipal utility relocation study documentation must be saved in ProjectWise in the Correspondence/Utilities, Drainage, and Roadside subfolder.

<u>Region/TSC Utility Coordinator Responsibility</u>

After determining that water main relocation is a candidate for federal funding, the Region/TSC Utility Coordinator will initiate the relocation study.

This study starts by gathering information on the existing water main to determine if its characteristics (e.g., age, material, type of joint, maintenance history, location, etc.) could adversely impact the design life of the project if left in place. This information should include:

1. Existing Conditions:

    a. Location of water main in reference to existing pavement, bridge decks, piers, footings, etc.
    b. Size of water main.
    c. Age of water main.
    d. Depth of water main.
    e. Pipe material and class, if applicable.
    f. Type of joint, if applicable.
    g. Maintenance record.
    h. General comments (e.g. site specifics).

2. Proposed Conditions:

    a. Location of water main in reference to proposed pavement, bridge decks, piers, footings, etc.
    b. Depth of water main in reference to proposed pavement.
    c. Municipality-proposed alterations or plans.
    d. Type of Impact (e.g., proposed storm/sanitary sewer location, mucking operations, changes in grade, etc.).

## 9.02.01 (continued)

**Municipal Utility Relocation Policy**

3. Conclusions and Recommendations:

    a. Advantages/disadvantages of relocation.
    b. Cost of relocation.
    c. Region/TSC recommendation.

The Region/TSC shall make a preliminary recommendation based on their study and will notify the Municipal Utility Design Unit that this study is available on ProjectWise for their review.

Department's Municipal Utility Design Staff Responsibility

The Department's Municipal Utility Design Staff will make a recommendation based on the following:

- Information received in the water main relocation study.
- Proposed design life of pavement.
- Expected remaining life of existing utilities.
- Grading that results in less than adequate cover.
- Past experience and expertise.
- Potentially adverse materials or conditions, including:

    - Ductile iron pipe (Class 52, 53, 54, 56) older than 50 years.
    - Ductile iron pipe (Class 50 or 51) older than 30 years.
    - Cast iron pipe of Class 20 or 21 older than 30 years.
    - Cast iron pipe of Class 22 older than 50 years.
    - Pit cast iron pipe older than 70 years.
    - Asbestos cement pipe.
    - Non-reinforced concrete pipe older than 30 years.

## 9.02.01 (continued)

    - Prestressed concrete pipe older than 50 years.
    - Plastic pipe with an SDR of less than 17.5 and older than 15 years.
    - Wood pipe.
    - Pipe with leaded joints.
    - Mechanical joints older than 50 years.
    - Thrust restraint by tie rods or friction clamps older than 50 years.
    - Metal pipe installed in acidic soil conditions.

Recommendations are reviewed between the Region/TSC and the Department's Municipal Utility Design Staff. If it is decided to relocate the facility, the Region/TSC will determine if there are any budget constraints for moving forward with the relocation and will proceed accordingly.

Failure to proceed with the necessary funding will result in only Direct Conflicts being included in the project.

## 9.02.01 (continued)

**Municipal Utility Relocation Policy**

**E. Lead (Pb) and Galvanized Steel Water Service Line Replacement**

Based on regulations from the Michigan Department of Environment, Great Lakes, and Energy (EGLE), partial replacements of water services containing lead (Pb) or galvanized steel that were once connected to lead (Pb) service lines are prohibited. Partial replacements are defined as any water service replacement that does not replace the entirety of the service line from the water main to the water meter before reintroducing water to that service. Impacted service lines must include replacement with proper materials outside the ROW, including from the curb stop into the building (or end user, where no building exists) being served.

Water service line replacement on Department projects can occur because of the following:

- When required by trunkline needs because of a Direct or Indirect Conflict.
- When performed by a municipality for its own benefit (Municipal Convenience).

Whether a Direct or Indirect Conflict, Department funding for water service replacement will only be allocated to the curb stop. All costs (including incidental costs such as surface restoration and ROW acquisitions) beyond the ROW are funded by the municipality; as noted in Section 9.02.01C, work outside of the ROW is considered a betterment. Temporary water service, when required, is included in the ductile iron water main pay item.

## 9.02.01 (continued)

This work must be coordinated with the Water Authority during the scoping and design of the project. The Scoping Manual requires that MDOT Form 2483 be submitted to public and private utilities to gather information on their existing infrastructure. This form solicits information from municipalities on if any Pb or galvanized steel services are present within the vicinity of the project. If present, the Project Manager must contact the Department's Municipal Utility Design Staff when design is starting. The Department's Municipal Utility Design Staff will assist the Project Manager in ensuring compliance with both Department and EGLE requirements governing the replacement of such water services. If part-width construction (staging the project such that live traffic flow is maintained through the construction area on a reduced number of lanes, allowing for the balance of the road or bridge to be constructed) was selected to be the construction/maintenance of traffic methodology, it is possible that the water services will have to be directional drilled or jack and bored to avoid partial replacement. Part-width services can only be constructed provided that no water is introduced into the service until it is replaced in its entirety.

It is the ultimate responsibility of the Water Authority to facilitate the replacement of any Pb or galvanized steel services outside the ROW, regardless of which party is necessitating the replacement. If the Water Authority is not cooperative or willing to participate in the cost of these replacements (most notably from the curb stop to the water meter), the Designer/Utility Coordinator must contact the Project Manager and the Department's Municipal Utility Design Staff immediately to determine the proper course of action. Under no circumstances will a project be Advertised for Construction without Pb and galvanized steel service line replacements being addressed. This can be done in multiple ways:

## 9.02.01 (continued)

**Municipal Utility Relocation Policy**

1. A separate Water Authority project in coordination with the Department project. The Water Authority may elect to replace affected service lines with their own contract concurrent with the Department contract. A coordination clause between contracts will have to be included in the contract to ensure timely successful completion of the work.

2. The Water Authority work is included in the Department project. Project Managers must request that the Water Authority provide a written inventory of the water services and locations, including material types and sizes, expected to be encountered in the project. This information may have already been received as part of the scoping phase. This inventory is to be included in the water main materials special provision.

   The Water Authority is responsible for securing permission to work outside the existing ROW from the property owner and therefore Uniform Act requirements do not apply. This permission must be compliant with Subpart A of 23 CFR 645 titled "Utility Relocations, Adjustments, and Reimbursement," specifically 23 CFR 645.111 titled "Right-of-way."

   The Water Authority must provide the Department with written certification stating all property interest necessary to construct the service line replacement has been acquired to do work outside the ROW. The Water Authority certification must be included in the Department ROW certification.

## 9.02.01 (continued)

3. The Water Authority is granted an exemption from EGLE (Mich. Admin. Code R. 325.10302). It may be acceptable for the Water Authority to provide documentation of an exemption granted from EGLE to allow the portions of Pb and galvanized steel service lines between the curb stop and the water meter to remain in place during construction and a specified amount of time beyond project completion. In this case, the Department project would replace the impacted service lines from the water main to the ROW. If this is the alternative that the municipality pursues, it is imperative that this be identified as early in the design process as possible as it requires a submittal from the Water Authority to EGLE at least 90 days before project turn-in (Mich. Admin. Code R. 325.10303). This application, subsequent requests for information, and public hearings where required are to be coordinated and led by the municipality.

## 9.02.02 (revised 7-25-2022)

### Private Utility Relocation Policy

Private utilities are those individually owned or owned by groups of individuals and stockholders. Private utilities normally provide communication services (e.g., telephone, cable TV, etc.), electric service, gas, and oil.

Private utilities may be located within trunkline ROW by permit issued by the Department pursuant to Public Act 368 of 1925. If conflicts between private utilities and a trunkline project exist, relocation or adjustment of the utility is at the utility company's expense. However, if a utility company has the right of occupancy in its existing location, they may meet the eligibility requirements for reimbursement.

## 9.02.03 (revised 7-25-2022)

### Including Non-Municipal Utility Work in Contracts

All non-municipal utility work including in contracts must be referred to the Development Services Division's Utility Coordination and Permits Section.

### A. General

Utility companies (excluding municipalities) occupying trunkline ROW by virtue of Public Act 368 of 1925 and the Department's Utility Accommodation Policy are subject to relocating their facilities at their own expense if a conflict exists. If during the preliminary design and utility coordination meetings it is determined that the Department can adjust its plans to allow either the utility company's facilities to remain in place or reduce their relocation cost, efforts should be made to do so if the overall project is not compromised. If the utility company's facilities are located in the ROW by permit, costs incurred by the Department to revise its plans in order to accommodate a utility company are billable to that utility company. Such adjustments will require coordination and concurrence with the Development Services Division's Utility Coordination and Permits Section.

Utility companies with facilities that have manholes within the roadway are responsible for adjusting these manholes if required by the project. Most utility companies will adjust their own manholes during the project, which requires a Special Provision detailing the work to be included in the proposal. However, provisions may be made at the utility company's request to include adjustment of their manholes in the work items of the project; this work would still be charged to the utility.

## 9.02.03

**Including Non-Municipal Utility Work in Contracts**

**B. Procedures**

The following procedure shall be used when work on behalf of a non-municipal utility is performed by a Department contractor during construction. Upon a mutual agreement between a utility and the Department, work items are incorporated in Department projects and charged to the utility.

Example work items that may be chargeable to a utility include adjustment of manholes, existing facility removals, supporting utility poles, and utility bridge attachments.

Region/TSC Utility Coordinator Responsibility

1. Meet with each utility to determine whether any work on behalf of the utility shall be included in the project. The following utility coordination issues shall be discussed:

   - Proposed construction schedule.
   - Type of work required.
   - Plan completion date.

Project Manager Responsibility

2. Ensure the agreed upon utility work is included in the plans and contract documents.

3. Complete Utility Charge Estimate (Form 0223).

   Note: When the total estimated cost of the utility work is less than $1,000, the Department shall not charge the utility, and simply incorporate the work into the project. If a pay item(s) is not federally participating, it shall be funded 100% by the Department.

   Note: Contact Bridge Field Services for asbestos removal and disposal estimates.

## 9.02.03 (continued)

4. Send Form 0223 and any plan sheets that indicate the utility work to the Region/TSC Utility Coordinator if the total estimated cost of the utility work is greater than $1,000 and less than $100,000.

   Note: For costs greater than $100,000, an individual agreement shall be required. The Project Manager shall contact the Development Services Division's Utility Coordination and Permits Section to initiate this request.

5. Receive copy of Form 0223 and Utility Approval Letter or notification of utility denial from Region/TSC Utility Coordinator.

6. Develop a special provision that covers all work for the utility, except for asbestos removal and disposal as noted. The pay item shall be established as a lump sum with an established maximum based on the line titled "Maximum Contract Bid Amount (125% of Subtotal)" on Form 0223.

   Note: The maximum contract bid amount is not the "Total Maximum Charge to the Utility."

   Note: Lump sum pay item(s) for utility work are the preferred method. However, per unit pay item(s) can be considered for items of work that are not suitable as lump sum.

   Note: When the utility work involves asbestos removal and disposal, a special provision is required. Asbestos-related work will be paid as a dollar amount and not as a lump sum. The Special Provision for Utility Coordination and Utility Work is not needed for this work.

7. Establish a separate non-federally participating category in AP Preconstruction for each utility.

8. Ensure JobNet reflects the utility funding.

## 9.03

## DESIGN GUIDES

### 9.03.01 (revised 7-25-2022)

**Utility Poles and Light Standards**

These guidelines apply to the location of utility poles and light standards on free access roadway construction projects and all trunkline, utility, and roadway lighting construction. Where reconstruction of a roadway is included in the project, every effort should be pursued to ensure that adjacent poles meet the recommended location criteria. However, if the project does not impact the location of existing poles, a specific pole relocation is dependent on a concentration of fixed-object crashes or the clear potential for crashes.

When placed within trunkline ROW, light standards and utility poles should be located to provide a safe recovery area for motorists.

**A. General Considerations**

Individual cases may arise that require special treatment such as: traffic signal installations; locations demonstrating fixed-object crash patterns; and locations with unique design problems, sight distance restrictions, high pedestrian activity, or unique environmental conditions.

Certain trunkline geometrics warrant special consideration for placement of light standards and utility poles. Target positions to traffic flow should be avoided if possible. Such locations are: opposite T-intersections; outside of curves; beyond lane drops; and locations not conducive to safe traffic operation. Where guardrails or barriers are in place specifically for shielding other roadside obstacles, light standards and utility poles should be placed behind the guardrail or barrier and outside of the deflection zone of the guardrail/barrier. The number of light standards and utility poles should be kept to a practical minimum. Consideration should be given to utilizing joint-use construction where possible.

## 9.03.01 (continued)

**B. Authorization**

1. The Development Services Division processes permit applications to place light standards or utility poles. These applications will be made on forms furnished by the Department and shall be accompanied by a sketch showing the proposed locations in relation to the pavement edge or curb face and ROW and should also include the posted speed limits and the widths and locations of any sidewalks.

**C. Clarifications of Terms Used in Guidelines**

1. The placement of light standards and utility poles includes all related appurtenances.

2. All lateral distances are measured from traffic side of the utility pole or light standard to lane edge or curb face.

**D. Lateral Offset Guideline**

Light standards and utility poles should always be placed as far from the roadway as feasible.

1. Where posted speeds are less than 35 mph:

   a. In areas with curb types F or C (as specified on Standard Plan R-30-Series) or their equivalent, light standards and utility poles should be a minimum of six feet from the back of curb.

   b. In areas with curb types B or D or their equivalent, light standards and utility poles should be a minimum of 15 feet from the edge of pavement

## 9.03.01 (continued)

### Utility Poles and Light Standards

c. In Central Business District areas with curb types F or C or equivalent and continuous sidewalk between the curb and buildings, light standards and utility poles may be placed two feet from the back of curb.

d. where pedestrian and bicycle traffic will take place on sidewalks or side paths designers should consider these users when deciding on proper placement of utility poles.

2. Where the speed limit is 35 mph or greater on tangent roadways with flat side slopes, light standards and utility poles should be placed according to the following table, regardless of the presence or absence of barrier curb.

| SPEED LIMIT mph | LATERAL OFFSET (from travelled way) feet |
|---|---|
| 35 | 18 |
| 45 | 20 |
| 50 | 25 |
| 55 | 30 |

These lateral offsets should be increased for steeper slopes and for horizontal curves.

Light standards on roadways with a speed limit of 35 mph or greater that cannot be placed equal to or greater than the prescribed distances shall be equipped with a "Frangible Device." The device shall meet NCHRP 350 criteria and be certified by FHWA (as proven by a letter of acceptance from FHWA).

## 9.03.01 (continued)

### E. Light Standard Details

All light standards must be detailed on the design plans. Department details for light standards (non-frangible base and frangible base) and light standards assemblies are available by contacting the Municipal Utility Design Staff. Shop drawings and design calculations for all light standards are to be submitted to the Municipal Utility Design Staff and the Operations Field Services Division's Structural Fabrication Unit for review and subsequent approval by the Project Manager. This applies to all light standards and details other than those developed and provided by the Department.

Any light standard foundation(s), light standard(s), or portions thereof considered for salvage and reuse must first be inspected by the Structural Fabrication Unit during the planning or design stage of the project. Contact the Structural Fabrication Engineer to arrange for inspection.

**9.03.02** (revised 7-25-2022)

**Municipal Utility Alterations and Notification of Utility Design Units**

**A. Procedure**

This procedure is to be followed whenever municipal utility alterations occur on a project and *after* the Utility Coordination Meeting (Refer to Chapter 14 Section 14.26)

Municipal Utility Design Staff/Consultant Responsibility

1. If utility relocation is part of the Department contract:

   a. Prepare plans to include the utility alteration in the Department contract (Begin PPD Task 3670).

   b. Send plans and specifications to the affected municipality for comments.

   c. Once municipality approves utility plans, submit plans, specifications, and estimates to the Project Manager for incorporation into the plans to be reviewed during the Final Project Coordination meeting.

   d. Address Final Project Coordination Meeting comments and resubmit to the Project Manager and municipality.

   e. Complete all certification acceptance documents.

   f. If requested, assist the municipality in filling out the required permits for the project. However, all permits required by EGLE must be submitted by the facility owner.

   g. Submit copies of municipal plans, special provisions, specifications, and draft permits (if applicable) to the municipality.

**9.03.03** (revised 7-25-2022)

**Utilities on Plans**

MISS DIG provides a central source of information regarding the location of underground utilities throughout the state. Most underground utilities participate in the "Miss Dig" system. Ensure the following note is placed on the plans:

*Contact MISS DIG System, Inc. for the protection of underground utilities and in conformance with MCL 460.721 et seq, by phone at 811 or 800-482-7171 or via the web at either elocate.missdig.org for single address or rte.missdig.org, a minimum of 3 working days prior to excavating, excluding weekends and holidays.*

Additionally, label underground utility lines that are no longer in use, or are to be abandoned, as “UTILITY LINE OUT-OF-SERVICE” on the plans. Include the following note for underground utilities in the note sheet:

*Plan information indicates an existing underground utility is or may be out-of-service within the limits of this contract. The contractor is cautioned to treat such a line as if it were still in service and notify MISS DIG when working in the area of the out-of-service facility.*

Refer to Section 1805.02 of the Utility Coordination Manual.

## 9.04

## MISCELLANEOUS

### 9.04.01 (revised 7-25-2022)

**Utility Trenches**

Utility trenches for buried utilities are detailed on Standard Plan R-83-Series. For permanent trench pavement cross-section replacement, the replaced engineered cross-section (including the pavement, base, and subbase layers) should be structurally equivalent to the existing pavement section on either side as defined by Department pavement design guidelines. The replaced cross-section should match in materials and thicknesses to the existing pavement on either side of it. However, constructability or material availability may prohibit the exact replacement. In these instances, the replaced cross-section can be of different materials and/or thicknesses but should be as similar as possible and maintain structural equivalency to the existing pavement section on either side. Contact the Department Region Soils Engineer for current pavement design guidance and assistance.

### 9.04.02

Section deleted.

### 9.04.03 (revised 7-25-2022)

**Permit Applications**

Municipalities and private corporate utilities may require permits or other approvals for utility alterations or the installation of new utility facilities. Coordination with the Municipal Utility Design Staff, the Development Services Division's Utility Coordination and Permits Section, and the Region/TSC Utility Coordinator is needed to determine the current requirements for permits and approvals. Refer to Chapter 14.

### 9.04.04 (revised 7-25-2022)

**Temporary Utility Hook-Ups**

Occasionally a project requires utility services for contractor operations (e.g., electrical power feed on a rest area or pumphouse project). A budgeted amount should be included in the proposal to compensate the Contractor for arranging and paying advanced fees for connection and service.

Information on cost breakdown and utility contact is needed to prepare a special provision to show the budgeted amount. When electrical service is required, the Municipal Utility Design Staff will contact the utility company for all necessary information. When other utility services are required, contact with the utility company is made through the Region/TSC Utility Coordinator.

### 9.04.05

**Water Main Appurtenances**

Adjustments and relocations of fire hydrants, valve boxes, water manholes, water shutoffs, and service connectors require coordination with the Municipal Utility Design Staff.

**9.04.06** (revised 7-25-2022)

**Gas Main Relocation Policy**

The following policy governs the relocation of gas mains in Department projects.

1. All gas mains (distribution or transmission) may remain under proposed widening areas unless the main has a history of frequent repairs or is cast iron. The maintenance records furnished by the gas companies will be reviewed by the Region/TSC Utility Coordinator, and if the report indicates there have been no repairs in the five preceding years, the gas main may remain.

2. Excluding cast iron, no main shall be required to be relocated:

   a. When the construction project is less than ½ mile in length.

   b. Where relocation would require extensive private easements.

Only extenuating circumstances will warrant modification from the above policy. Contact the Development Services Division's Utility Coordination and Permits Section Manager.

All documentation pertaining to the disposition of gas mains must be saved in ProjectWise in the Correspondence/Utilities, Drainage, and Roadside subfolder.

**9.04.07** (revised 7-25-2022)

**Sanitary Sewers**

Existing combined sanitary and storm sewers should not be used for drainage purposes on a new roadway or improvement project.

**9.04.08** (revised 7-25-2022)

**Sanitary Sewer Service Leads**

On projects that include sanitary sewer relocation, continuity of existing service leads must be addressed. This may entail reconstructing the lead, bulkheading and abandoning the lead, or just bulkheading the lead. Approval for abandonment of an existing sanitary service must be approved by the municipality.

**9.04.09** (revised 7-25-2022)

**Subsurface Utility Engineering (SUE)**

SUE is a branch of engineering practices that manages risks associated with utility mapping, utility coordination, utility relocation design and coordination, utility condition assessment, communication of utility data, utility relocation cost estimates, implementation of utility accommodation policies, and utility design. [American Society of Civil Engineers (ASCE) Standard 38-02]

This section is not intended to be an all-encompassing document or to replace sound engineering judgment.

Funding for SUE-contracted services is typically derived from the project's Preliminary Engineering (PE) phase. An evaluation on the merits of applying SUE should be done during the project's scoping or design phase so that appropriate funding may be allocated. The earlier SUE services are identified, the better they can be coordinated during the project's PE phase.

## 9.04.09 (continued)

**Subsurface Utility Engineering (SUE)**

If the need for SUE-contracted services is determined prior to the development of the design scope of work, SUE services should be included as part of that scope. This is particularly beneficial on consultant design projects where the prime consultant is then responsible for both the design and SUE services. This will enhance coordination of these functions during the project's design phase.

All SUE providers shall be selected from the Department's SUE prequalification list.

The following guidelines provide items to consider when determining whether to use SUE for a project. It is not all inclusive.

- Impact of conflicts with unknown subsurface utilities during construction.
- Likelihood that inaccurately-located subsurface utilities would delay the project's completion schedule and increase contractor costs.
- Critical nature of project progress schedule and/or completion date.
- Safety risks involved with the subsurface utilities present on the project.
- Type and quantity of subsurface utilities present.

SUE may be applied to varying degrees on a project depending on the situation. These degrees are denoted as Utility Quality Levels. There are four Utility Quality Levels that represent the professional opinion of the quality and reliability of utility information based on different methods of data collection and interpretation. (ASCE Standard 38-02)

## 9.04.09 (continued)

A project may include one or multiple utility quality levels depending on the risk factor(s) associated with each subsurface utility. Subsurface utility data evaluation is an important part of the utility coordination and SUE process.

Utility Quality Level D - Information derived from existing records or oral recollections. (ASCE Standard 38-02)

Utility Quality Level C - Information obtained by surveying and plotting visible above-ground utility features and by using professional judgment in correlating this information to Quality Level D information. (ASCE Standard 38-02)

Utility Quality Levels D and C are typically used on almost all Department construction projects. Both involve contacting utility owners and obtaining available utility records. They may also include a site visit to survey visible surface features to verify utility records.

Utility Quality Levels D and C are typically suitable when a project has only a few subsurface utilities, their location is well known, and there is limited risk in only using available utility records.

Utility Quality Level B - Information obtained through the application of appropriate surface geophysical methods to determine the existence and approximate horizontal position of subsurface utilities. Utility Quality Level B data shall be reproducible by surface geophysics at any point of their depiction. This information is surveyed to applicable tolerances defined by the project and is incorporated into plan documents. (ASCE Standard 38-02)

## 9.04.09 (continued)

**Subsurface Utility Engineering (SUE)**

Utility Quality Level B, also referred to as "designating," involves the horizontal mapping of subsurface utilities to a projects survey control. Obtaining Utility Quality Level B information is desired when the PM is risk-averse. Utility Quality Level B should be considered for subsurface utilities that have discrepancies or may impact the project if not in the exact position shown. Once Utility Quality Level B information is obtained, it is compared with the project plans to identify conflicts. Obtaining Utility Quality Level B information shall be considered when:

- Discrepancies exist between the utility records and what is represented in the field.
- The project involves lots of utilities and/or the utility owners are unsure of their location.
- An adverse effect on the project could be caused by utilities inaccurately represented on the records.
- Inaccurate horizontal locations received from utility records may cause the project to miss a critical completion date.
- It is suspected that there are more utilities in the project limits than shown and/or received from utility record.
- It is suspected that there are buried structures (tanks and/or foundations) not shown on drawings.

Utility Quality Level A - Precise horizontal and vertical location of utilities obtained by the actual exposure (or verification of previously exposed and surveyed utilities) and subsequent measurement of subsurface utilities, usually at a specific point. Minimally-intrusive excavation equipment is typically used to minimize the potential for utility damage. Precise horizontal and vertical location, as well as other utility attributes, is shown on plan documents. Accuracy is typically set to 15-mm (approximately 5/8-inch) vertical and to applicable horizontal survey and mapping accuracy as defined or expected by the project owner. (ASCE Standard 38-02)

## 9.04.09 (continued)

Utility Quality Level A, also referred to as "locating," involves using non-destructive excavation techniques (e.g., air-based vacuum excavation) to expose the subsurface utility and obtain its precise horizontal and vertical position. Obtaining Utility Quality Level A information shall be considered when:

- A subsurface utility could have a major impact on the project and knowing its exact position is critical.
- Precise vertical location of subsurface utilities is critical to a design feature of the project. This may occur when modifying a design to leave a utility in its current location.
- Proposed grade changes may require subsurface utility relocations or cause a utility to have insufficient cover.
- There is a possibility that subsurface utility vertical elevations could be inaccurate.
- A delay, based on vertical location received from utility records, may cause the project to miss a critical completion date.

## 9.04.10 (added 2-16-2016)

**Lighting Project –
Energy Rebate Procedure**

Most major energy companies (e.g. Consumers Energy, DTE, Lansing Board of Water and Light, Cloverland Electric) have annual energy reduction incentive rebates. Energy company participation in rebate incentives and contact information can generally be found on their respective websites. Contact Municipal Utility Design Staff if this information is not found or is unclear.

The amount of the rebate is based on the energy reduction percentage by converting existing lighting fixtures to more efficient ones. New lighting installation projects do not qualify for rebates. The reduction of energy on existing lighting must be determined from utility electric meter KWH readings.

The Department or consultant designer initiates the rebate request by verbal contact with the energy company early in the preliminary plan development phase, then subsequently by formal application. Incentives are available on a “first come/first served” basis until annual funding has been exhausted. Consultant lighting designers must notify the statewide electrical engineer when a rebate incentive has been initiated on behalf of the Department.

When conversion of lighting fixtures is performed by Department forces, the request to the energy company for an incentive rebate is made by the design engineer (either the Department statewide electrical engineer or the region designer) during the design and prior to the start of work.

## 9.04.10 (continued)

The information submitted to the utility company required for the incentive request consists of the lighting plans, utility electric meter numbers, shop drawing submittals of the proposed lighting, and the type of existing lighting presently installed.

The utility company then reviews the information and approves the request as submitted to reserve the incentive funds to be awarded once the project is complete. As part of the approval process, the utility company calculates the rebate amount for the qualifying project work from the documentation provided.

Upon completion of the lighting installation, the Department statewide electrical engineer requests a final inspection by the utility company of the new lighting installed. Typically, within four to six weeks from the final inspection, the Department receives the rebate incentive check from the utility company. Forward all rebate checks to the statewide electrical engineer for processing.

## 9.05

Section deleted.

**14.25** (revised 12-17-2018)

## REQUEST FOR SPECIAL SOILS INVESTIGATIONS AND / OR DESIGNS
**(PPD Task Description 3510)**

Although the Region/TSC Soils and Materials Engineer is responsible for supplying soil borings, pavement cores and limits and quantities for removal of unstable materials (peat, muck, etc.), to the Design Unit, other types of soil analysis may also be necessary. Any soil information, analysis and design regarding the following should be requested from the Geotechnical Services Unit of the Construction Field Services Division.

- Sewers and culverts greater than 5'-0"
- Box culverts greater than 4'-0" x 4'-0"
- Retaining walls
- Sound walls (except Metro Region)
- Light Towers (except Metro Region)
- Mechanically stabilized earth (MSE) walls
- Reinforced soil slopes
- Pipe and culvert trenchless installations

In order to request any of the above, the Project Manager should send a memo and electronic access to the plan set with the following minimum information:

- Plan of site (location map)
- Alignment with stationing
- Benchmarks as close to the location as possible
- A detailed description of the requested information
- Plan completion date and a date when the information is needed.
- Proposed method of controlling water (during culvert construction)-diversion channel, temporary dam, pump across road, etc.

**14.26** (revised 7-25-2022)

## DISTRIBUTION OF PRELIMINARY PLANS TO UTILITIES AND UTILITY COORDINATION MEETING
**(PPD Task Description 3660)**
**(PPD Milestone 361M)**

Preliminary plan distribution to utilities must be completed whether or not utility conflicts have been identified. It is important to provide preliminary plans because it allows the utilities an opportunity to review the proposed project, to ensure facilities are plotted accurately, and provides notification to relocate facilities in conflict.

Distribution of preliminary plans, and the Utility Coordination Meeting if necessary, typically occurs after The Plan Review Meeting and before the Final Project Coordination (FPC) Meeting. The TSC Utility Coordinator and the Project Manager will work together to determine if a particular project warrants scheduling a Utility Coordination Meeting. Some projects may not require a Utility Coordination Meeting while others may require several meetings. Those invited usually include:

- TSC Utility Coordinator
- Project Manager/Cost and Scheduling Engineer
- Private/Public utilities
- Municipalities
- Municipal Utility Design Staff/Consultant
- Real Estate Services Section
- Road Commissions
- Design Team key members
- Design Consultant representatives
- MDOT construction team members

The preferred method for preliminary plan distribution is to send separate letters to public/private and municipal utilities that address the following:

## 14.26 (continued)

## DISTRIBUTION OF PRELIMINARY PLANS TO UTILITIES AND UTILITY COORDINATION MEETING

- The Letter to Public/Private Utilities at Preliminary Plan Stage, (Form 2481) includes the following:
  - References Public Act (PA) 368 of 1925 entitled Highway Obstructions and Encroachments; Use of Highway by Public Utilities
  - Gives legal notification to relocate
  - Authorizes preliminary engineering for reimbursable relocations
- The Letter to Municipal Utilities at Preliminary Plan Stage, (Form 2482) is used because MDOT may be responsible for the relocation costs associated with municipal utility relocations within their corporate limits. This may require MDOT to complete the following:
  - Perform the relocation design
  - Include relocation work in the project plans
  - Formalize an agreement

If Forms 2481 and 2482 are not sent to the utilities, the Utility Coordination Meeting Invitation letter must cite PA 368, authorize preliminary engineering, provide relocation reimbursement information, and be accompanied by preliminary plans.

## 14.26 (continued)

**Procedure**
Project Manager/Cost and Scheduling Engineer

1. Send preliminary plans to the TSC Utility Coordinator for distribution to utilities.

2. Complete a preliminary assessment of utility issues and conflicts with the TSC Utility Coordinator and Design Team. Ensure all utilities appear on the preliminary plans. Approximate location, size, and type of utility should be indicated. All utilities carrying dangerous, hazardous, or critical materials should be flagged on all plan sheets where the utility is shown. Refer to the Road Sample Plans.

   Note:
   It may be beneficial to have a conflict list and special plans with cross section details for use as presentation tools to the utilities.

3. Distribute preliminary plans to all potentially impacted utilities with either a Utility Coordination Meeting invitation or Forms 2481 and/or 2482.

4. Prior to a Utility Coordination Meeting, municipalities, if affected, should evaluate and comment on the preliminary plan and review the extent of the work and decide who will develop plans for utility alterations, if necessary (Department, Department's consultant, municipality, or municipality's consultant).

## 8.09.05

### Hanger Assembly Replacement Notes

A. Clean and coat the area within 3 feet each side of the centerline of the hanger assembly prior to installing the new link plates and pins. Shop coat proposed link plates. (Field coat proposed stiffeners.) (12-5-2005)

B. Repair the end diaphragm after installation of the new hanger assembly as shown on the plans. [Use if diaphragm repair is required.]

## 8.09.06 (4-19-2021)

### Existing Plan Sheet Notes

A. Do not work from this sheet. The information shown here is for reference only. No pay items are shown. [Use on existing plan sheets used for information only.] (9-18-1998)

B. The only items of work to be done from this sheet are identified by the legend box below, labeled with this project's job number. [Use on existing plan sheets used for removal and proposed work. Add the legend box below.] (9-18-1998)

| **JOB NO. <New Number>** | |
|---|---|
| | Proposed Work |
| | Denotes Removal Portions |

C. Only the hatched areas, indicating removals, are to be used for bidding purposes. [Use if just removals are shown, with no legend box.] (9-18-1998)

D. The bridge paint may contain lead. [Use on all projects with existing painted structural steel regardless of work type.] (8-20-2009)

## 8.09.07 (4-19-2021)

### Temporary Support Notes

A. Contact the Region/TSC Soils Engineer to request a foundation inspection prior to the placement of the temporary support footing (or the "Embankment, Structure, CIP"). (12-5-2005)

B. Use structural grade timber with a minimum flexural strength of 1,200 psi and a minimum horizontal shear strength of 100 psi.

C. Do not load temporary supports for a continuous period greater than four weeks. [Use when footing is placed on soil or paved surface.]

D. Use temporary concrete barrier to protect the temporary support as shown on the plans or as directed by the Engineer. [Use when protection of temporary support is not covered in maintaining traffic.]

E. Submit alternative design of the temporary support shown to the Engineer according to the Standard Specifications when any plan dimension, detail, or material is changed. Base alternate designs of the temporary support on loads as follows:

____ tons vertical girder load (Dead Load).
____ tons vertical girder load (Live Load).
____ psf allowable soil pressure.

(7-25-2022)

## 8.10

## STEEL REINFORCEMENT (9-1-1988)

A. Bundle and tag reinforcement according to the location as shown on this sheet.

# MICHIGAN DESIGN MANUAL
# BRIDGE DESIGN

## CHAPTER 12 REHABILITATION PROJECTS (continued)


**12.08 MISCELLANEOUS REHABILITATION**

12.08.01 Field Inspections

12.08.02 Concrete Repair - General (10-24-2001)

12.08.03 Substructure Repairs

12.08.04 Repair of Overhead Concrete Surfaces

12.08.05 Expansion Anchored Bolts

12.08.06 Deck Patching (5-1-2000)

12.08.07 Temporary Support Systems (8-6-92)

12.08.08 Roadway Widening With Filler Walls (3-26-2012)

12.08.09 Rocker Realignment (7-25-2022)

**12.09 BRIDGE DECK REPAIR STRATEGY (8-6-92) (3-26-2012)**

12.09.01 Deck Restoration

12.09.02 Bridge Deck Preservation Matrix (10-24-2001)

Appendix 12.01.01 Detroit Metropolitan Area (8-6-92)

Appendix 12.02 Clear Roadway Widths and Design Loading Structural Capacity (9-1-88) (2-21-2017)

Appendix 12.02.01 Design Exception Requirements - Vertical Clearance (5-1-2000)

Appendix 12.03.01 B. Sample request for Accident Analysis and Safety Review (5-1-2000)

## 12.08.06

**Deck Patching** (5-1-2000)

Delaminated portions of the deck that show signs of imminent spalling are to be hand chipped. These areas and those that have already spalled are to be repaired with a latex-modified concrete mixture.

In the Upper Peninsula and areas of the Lower Peninsula where the cost of latex-modified concrete is high, bridges with traffic volumes less than 4000 ADT are to have decks repaired by applying a latex bonding slurry to the chipped areas followed by patching with a Concrete patching mixture.

See Section 12.04.09 for the use of metal mesh panels with deck patching.

## 12.08.07

**Temporary Support Systems**

(8-6-92) Plans for rehabilitation may require details of a construction scheme as described in Section 7.01.10. Without this concurrence, the contractor may attempt a procedure which would jeopardize the integrity of the structure during his/her operations.

## 12.08.08

**Roadway Widening With Filler Walls**

For rehabilitation projects with piers in the clear zone due to roadway widening; filler walls shall be used between columns and guardrail attached as detailed on Standard Plans R-55 & 67-Series. (3-26-2012)

## 12.08.09

**Rocker Realignment** (7-25-2022)

The realignment of expansion rocker bearings should be considered as part of rehabilitation projects if the offset of the bearing has reached an unacceptable threshold. If expansion rocker bearings with excessive offset are left unaddressed there is an increased risk that the continued movement of the bearing could result in the rocker falling over and the beam being unsupported. The final decision to realign expansion rocker bearings will be made by the Bridge Design Engineer after a review of all available bridge inspection and bridge scoping reports, and a review of all the conditions that exist at a particular bridge.

Generally, realignment of expansion rocker bearings should be considered if at least one of the following conditions have been observed:

## 12.08.09 (continued)

A. The vertical line of the reaction falls outside of the middle half of the bearing surface for a majority of the expansion rocker bearings along a line of bearings. The vertical line of the reaction is to be taken as passing through the radius point of the bearing surface as is shown in the figure below. Maximum rocker offsets and rotations for various expansion rocker bearings are given in the table below.

The bearing dimensions used to make the assessment should be the dimensions shown on the as-built plans for the bridge.

If the offset was measured at a time of the year with either extremely high or low temperatures (over 100º F or below 0º F) it is recommended that the offset be checked again when ambient temperatures are more moderate to confirm that offset of the expansion rocker bearing is outside of the limits described above.

| "H" Dimension* (in) | Rocker Bearing Plate Width "A1" (in) | Max. Rocker Offset (in) | Max. Rocker Rotation (degrees) |
|---|---|---|---|
| 8 ½" | 6" | 1 ½ | 10 |
| 8 ½" | 7" | 1 ¾ | 12 |
| 8 ½" | 8" | 2 | 14 |
| 12 ½" | 9" | 2 ¼ | 10 |
| 12 ½" | 10" | 2 ½ | 12 |
| 12 ½" | 11" | 2 ¾ | 13 |
| 12 ½" | 12" | 3 | 14 |
| 12 ½" | 13" | 3 ¼ | 15 |
| 12 ½" | 14" | 3 ½ | 16 |
| 12 ½" | 15" | 3 ¾ | 18 |

*Note: The "H" dimension is the vertical distance between the sole plate and the masonry plate. See the figure below.

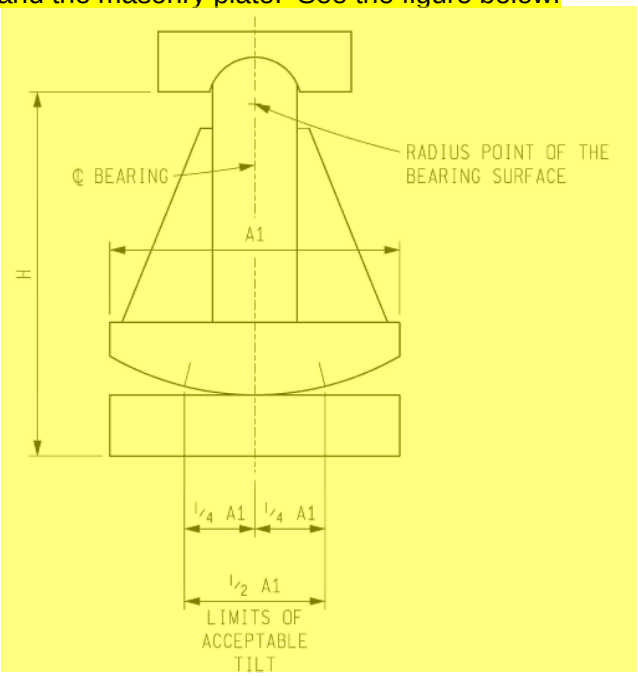

## 12.08.09 (continued)

### Rocker Realignment

B. If the vertical line of the reaction falls within the middle half of the bearing surface for a majority of the expansion rocker bearings along a line of bearing but the offset deviates from the calculated rocker offset for the temperature the alignment was checked at by more than ¾" realignment of the expansion rocker bearings should be considered.

C. When a substructure element supports two lines of expansion rocker bearings with an expansion joint in the bridge deck above the pier the bearings should be tilted in opposite directions, with both lines of bearings expanded/contracted relative to the fixed bearing for each span. If the bearing lines are tilted in the same direction the line tilted in the wrong direction should be realigned. This is illustrated in the figure below.

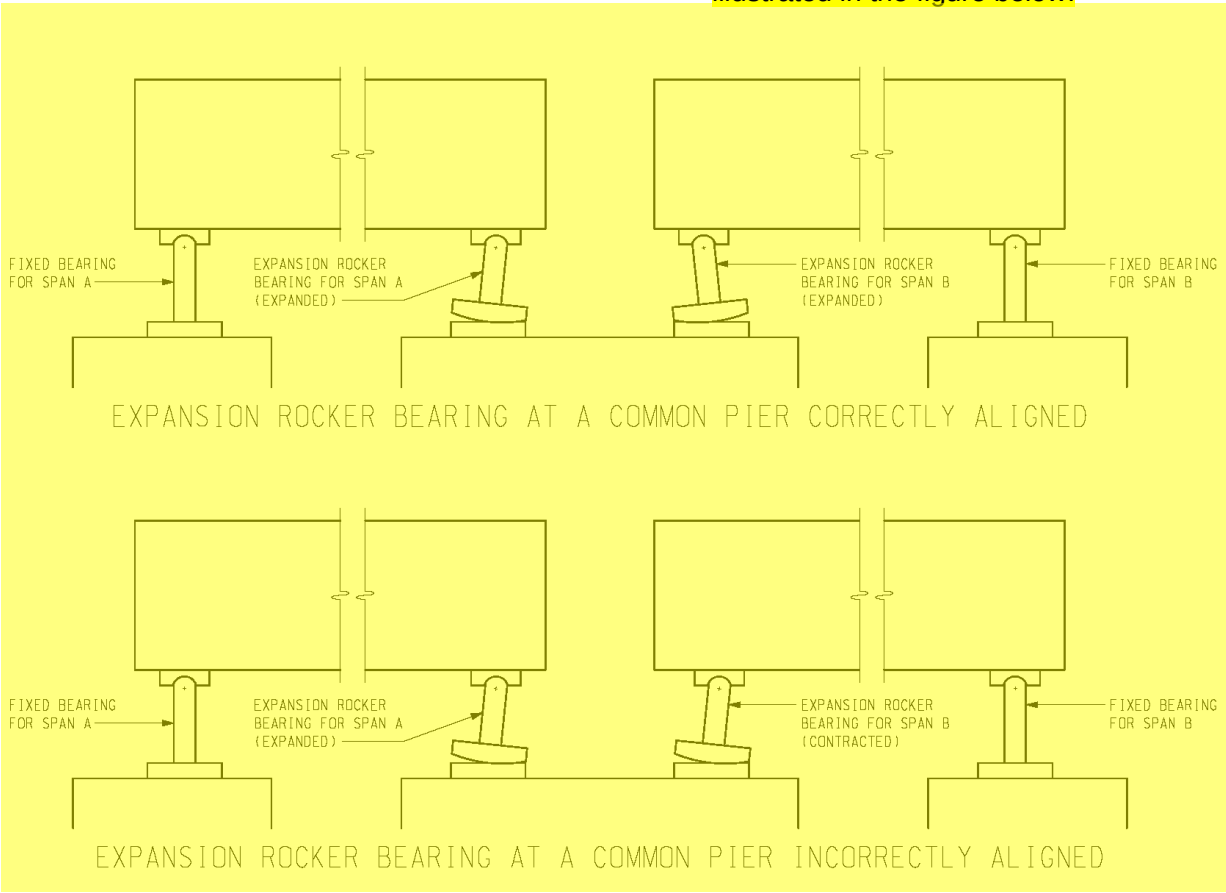

## 12.08.09 (continued)

### Rocker Realignment

D. If there is more than 1,000 feet of concrete pavement adjacent to the bridge and pressure relief joints have not been installed the proposed scope of work should include the installation of pressure relief joints, a structural approach slab, or approach pavement according to MDOT Standard Plan R-45-Series. If pressure relief joints have previously been installed but have closed up the proposed scope of work should include recutting the pressure relief joints, installing a structural approach slab, or installing approach pavement according to MDOT Standard Plan R-45-Series.

E. The Bridge Design Engineer may consider other measures to address the excessive tilt of expansion rocker bearings when the scope of work includes a deck replacement. This may include but is not limited to returning the entire superstructure to its proper location based on the temperature at the time the work is being performed. Measures like this are desirable because not only do they adjust the bearing alignment to minimize the risk of further movement resulting in an unsupported beam, but it also helps to ensure the proper gap between beams ends at piers and/or pin and hanger assemblies is restored.

## CONTENTS

**SECTION 5 - SUBSTRUCTURE (cont)**

5.45.01 Compacted Mound Under Footings

5.46.01 - .05A Structure Backfill and Embankment - Abutments

5.46.06 Structure Backfill and Foundation Excavation – Abutments

5.47.01 Protection of Spill-Through Abutment

**SECTION 6 - SUPERSTRUCTURE**

6.05.01A - .03 Bridge Deck Cross Sections

6.06.01 - .04 Substructure Clearances

6.06.05 Clear Zone Distances (Lc)

6.06.05A Curve Correction Factors (Kcz)

6.11.01 Modified Parabolic Crown Offsets

6.11.02 Straight Line Superelevation

6.20.01 Typical Section thru Dependent Backwall

6.20.01A Replacement of Existing End Header

6.20.03 Typical Section thru Independent Backwall

6.20.03A Typical Section thru Independent Backwall with Sliding Slab

6.20.03B Independent Backwall Sliding Slab Details

6.20.04 Integral and Semi-Integral Abutment Backwall

6.20.04A Integral and Semi-Integral Abutment Partial Backwall Details

6.20.04B Integral and Semi-Integral Abutment Approach Slab Details

6.20.04D Integral Abutment - Single Row Of Piles (Section Thru Stub Abutment)

6.20.04E Integral Abutment - Single Row Of Piles (Pile Orientation)

6.20.04F Semi - Integral Abutment - Sliding Backwall (Section Thru Abutment)

6.20.05 – .05A Sleeper Slab Details

6.23.01 Construction, Expansion and False Joint Details

6.28.06 Expansion Joint Cover Retrofit

6.29.05 Joint Details for Solid Parapet, Sidewalk, or Brush Block with Expansion Joint Device EJ3

6.29.06 Bridge Railing, 2 Tube

6.29.08 Bridge Barrier Railing, Type 7

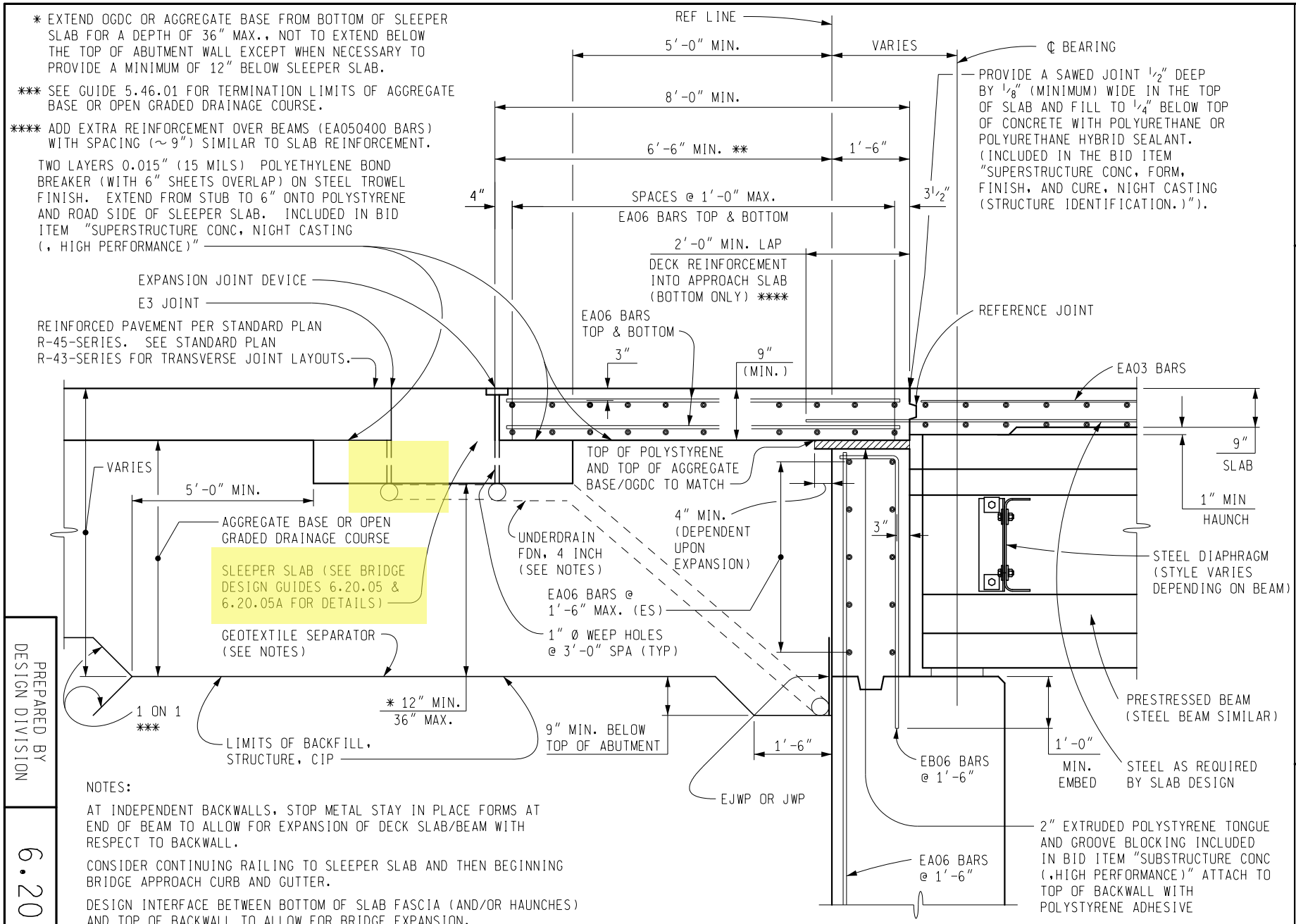


* EXTEND OGDC OR AGGREGATE BASE FROM BOTTOM OF SLEEPER SLAB FOR A DEPTH OF 36" MAX., NOT TO EXTEND BELOW THE TOP OF ABUTMENT WALL EXCEPT WHEN NECESSARY TO PROVIDE A MINIMUM OF 12" BELOW SLEEPER SLAB.

*** SEE GUIDE 5.46.01 FOR TERMINATION LIMITS OF AGGREGATE BASE OR OPEN GRADED DRAINAGE COURSE.

**** ADD EXTRA REINFORCEMENT OVER BEAMS (EA050400 BARS) WITH SPACING (~ 9") SIMILAR TO SLAB REINFORCEMENT.

TWO LAYERS 0.015" (15 MILS) POLYETHYLENE BOND BREAKER (WITH 6" SHEETS OVERLAP) ON STEEL TROWEL FINISH. EXTEND FROM STUB TO 6" ONTO POLYSTYRENE AND ROAD SIDE OF SLEEPER SLAB. INCLUDED IN BID ITEM "SUPERSTRUCTURE CONC, NIGHT CASTING (, HIGH PERFORMANCE)"

PROVIDE A SAWED JOINT ½" DEEP BY ⅛" (MINIMUM) WIDE IN THE TOP OF SLAB AND FILL TO ¼" BELOW TOP OF CONCRETE WITH POLYURETHANE OR POLYURETHANE HYBRID SEALANT. (INCLUDED IN THE BID ITEM "SUPERSTRUCTURE CONC, FORM, FINISH, AND CURE, NIGHT CASTING (STRUCTURE IDENTIFICATION.)").

NOTES:

AT INDEPENDENT BACKWALLS, STOP METAL STAY IN PLACE FORMS AT END OF BEAM TO ALLOW FOR EXPANSION OF DECK SLAB/BEAM WITH RESPECT TO BACKWALL.

CONSIDER CONTINUING RAILING TO SLEEPER SLAB AND THEN BEGINNING BRIDGE APPROACH CURB AND GUTTER.

DESIGN INTERFACE BETWEEN BOTTOM OF SLAB FASCIA (AND/OR HAUNCHES) AND TOP OF BACKWALL TO ALLOW FOR BRIDGE EXPANSION.

OMIT UNDERDRAIN UNDER SLEEPER SLAB IF OPEN GRADED DRAINAGE COURSE IS USED INSTEAD OF AGGREGATE BASE. MAINTAIN UNDERDRAIN AT ABUTMENT.

USE GEOTEXTILE SEPARATOR ONLY WITH OPEN GRADED DRAINAGE COURSE.

** SEE BRIDGE DESIGN GUIDE 6.20.03B FOR APPROACH SLAB ORIENTATION, REINFORCEMENT, AND DESIRED SLAB LENGTHS.

PLAN NOTE:
DO NOT USE WHEELED, ROLLER BASED OR MACHINE MOUNTED COMPACTION EQUIPMENT TO COMPACT THE SUBGRADE, SUBBASE, AND BASE WITHIN 10' OF THE SLEEPER SLAB AFTER IT IS BUILT. USE ONLY HAND/PLATE COMPACTORS. CONTACT PRESSURE OF COMPACTION EQUIPMENT SHALL NOT EXCEED 10 PSI.

DRAWN BY: BLT
CHECKED BY: VZ
APPROVED BY: BMW

MICHIGAN DEPARTMENT OF TRANSPORTATION
BUREAU OF DEVELOPMENT

TYPICAL SECTION THRU INDEPENDENT BACKWALL WITH SLIDING SLAB

ISSUED: 07/25/22
SUPERSEDES: 01/24/22

PREPARED BY DESIGN DIVISION

6.20.03A

| DRAWN BY: BLT<br>CHECKED BY: VZ<br>APPROVED BY: BMW | MICHIGAN DEPARTMENT OF TRANSPORTATION<br>BUREAU OF DEVELOPMENT<br><br>INDEPENDENT BACKWALL SLIDING SLAB DETAILS | ISSUED: 07/25/22<br>SUPERSEDES: 01/24/22 |
|---|---|---|

* FOR DESIGN SPEEDS GREATER THAN 45 MPH (POSTED > 40 MPH), THE DESIGNER MAY CONSIDER LENGTHS UP TO 20 FEET IN LENGTH (MEASURED ALONG ℄) AS PROJECT AND GEOMETRIC LIMITATIONS ALLOW.

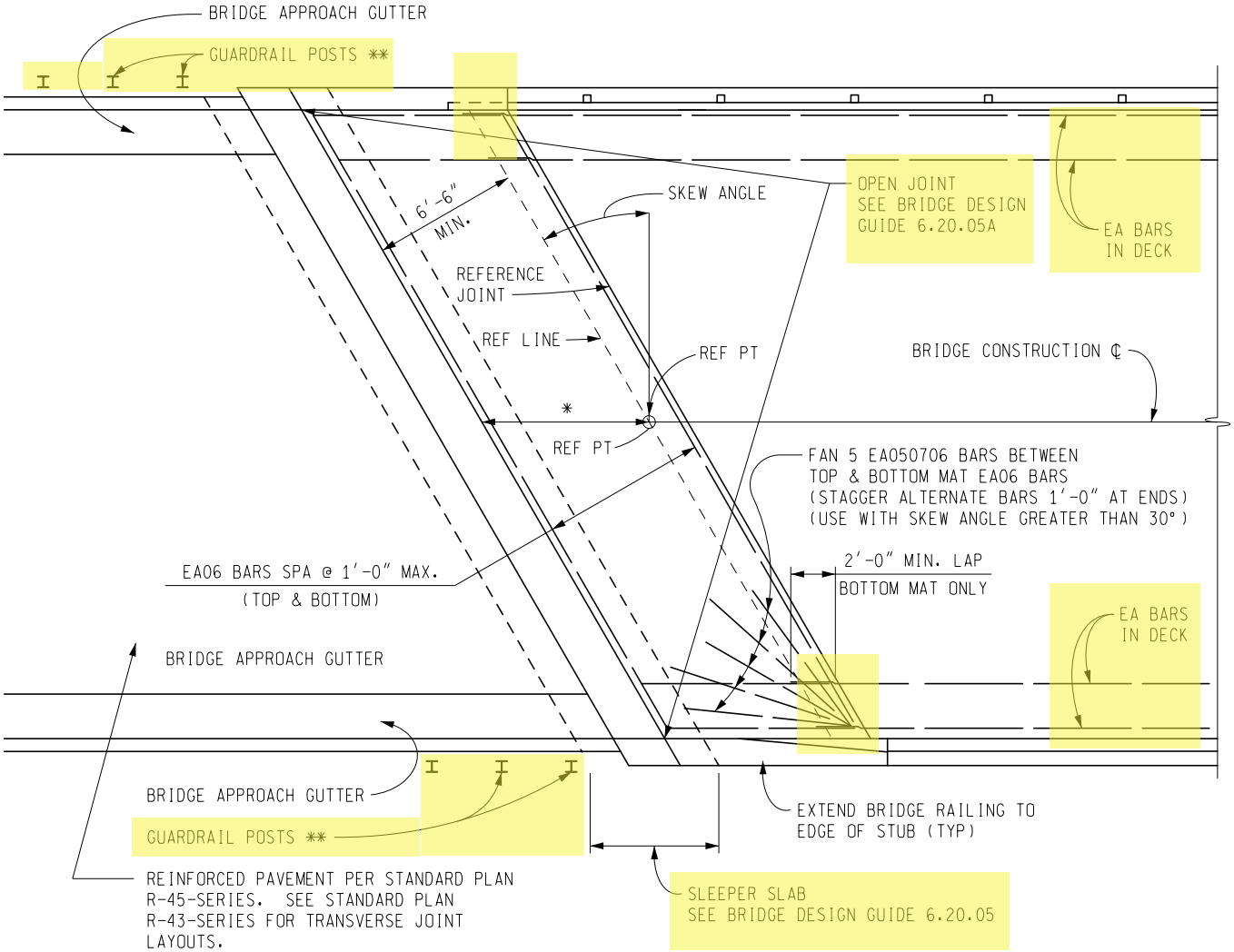


## PLAN OF APPROACH

NOTES:

POUR APPROACH SLABS FROM EXPANSION LOCATION TOWARD REFERENCE LINE (JOINT).

CAST APPROACH SLABS AT NIGHT WITH NIGHT TIME CASTING OF SUPERSTRUCTURE CONCRETE.

** USE GUARDRAIL ANCHORAGE, BRIDGE, DETAIL M4, M5 OR M6 PER STANDARD PLAN R-67-SERIES.

PLAN NOTE:
DO NOT USE WHEELED, ROLLER BASED OR MACHINE MOUNTED COMPACTION EQUIPMENT TO COMPACT THE SUBGRADE, SUBBASE, AND BASE WITHIN 10' OF THE SLEEPER SLAB AFTER IT IS BUILT. USE ONLY HAND/PLATE COMPACTORS. CONTACT PRESSURE OF COMPACTION EQUIPMENT SHALL NOT EXCEED 10 PSI.

| PREPARED BY DESIGN DIVISION | 6.20.03B |
|---|---|

| DRAWN BY: BLT<br>CHECKED BY: VZ<br>APPROVED BY: BMW | MICHIGAN DEPARTMENT OF TRANSPORTATION<br>BUREAU OF DEVELOPMENT<br><br>INTEGRAL AND SEMI-INTEGRAL ABUTMENT<br>EMPIRICAL APPROACH SLAB DETAILS | ISSUED: 07/25/22<br>SUPERSEDES: 01/24/22 |
|---|---|---|

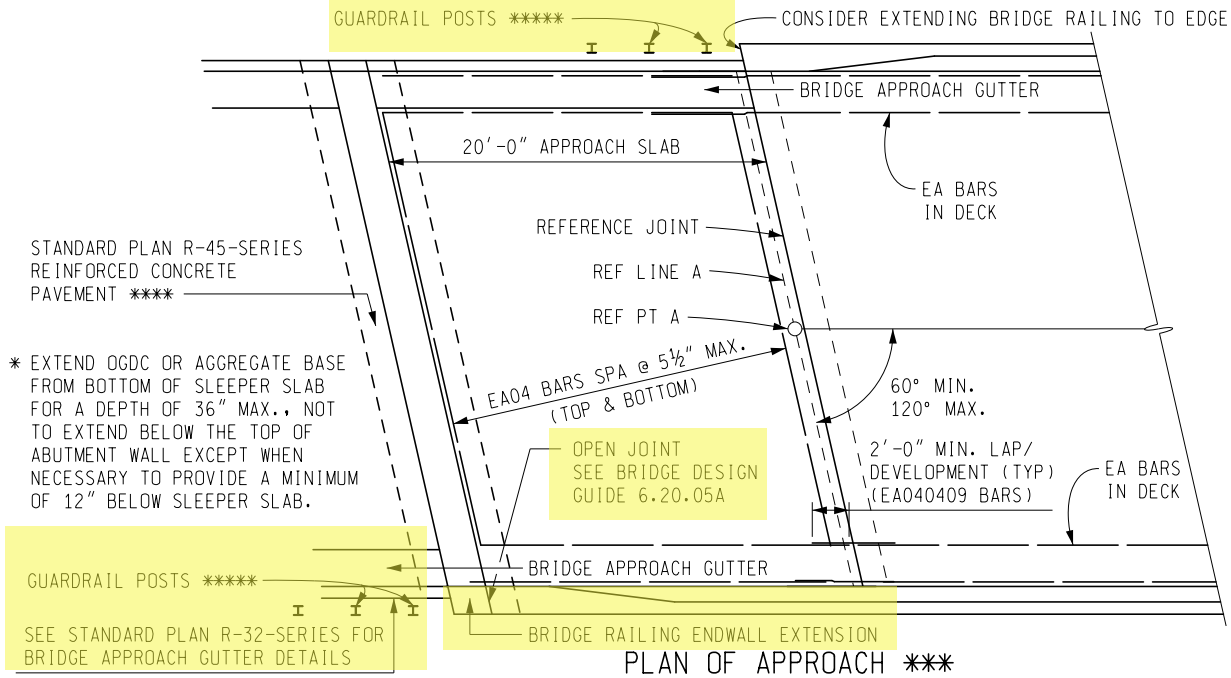


## PLAN OF APPROACH ***

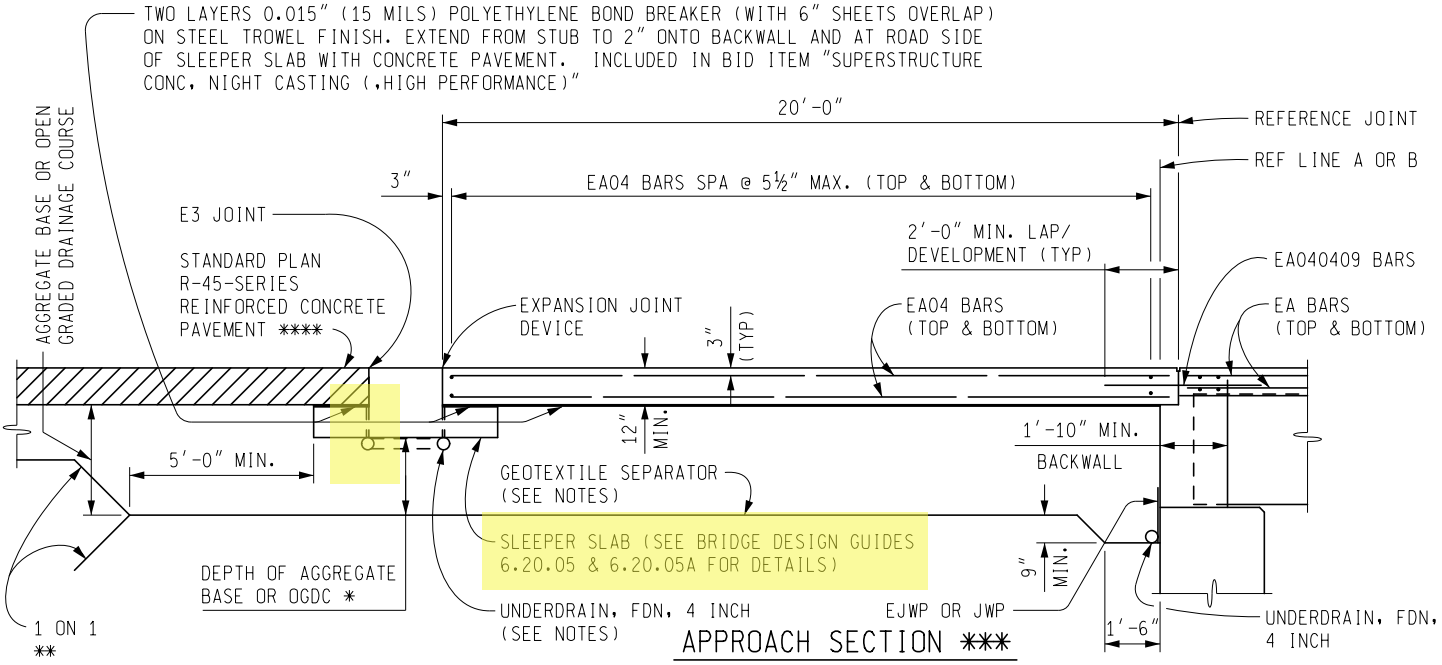


## APPROACH SECTION ***

NOTES:

ATTACH APPROACH CURB AND GUTTER TO THE APPROACH SLAB WITH BOTTOM MAT TRANSVERSE REINFORCEMENT AND TO THE BRIDGE DECK WITH BOTTOM MAT LONGITUDINAL REINFORCEMENT.

POUR APPROACH SLABS FROM EXPANSION LOCATION TOWARD REFERENCE JOINT.

CAST APPROACH SLABS AT NIGHT WITH NIGHT TIME CASTING OF SUPERSTRUCTURE CONCRETE.

USE GEOTEXTILE SEPARATOR ONLY WITH OPEN GRADED DRAINAGE COURSE.

OMIT UNDERDRAIN UNDER SLEEPER SLAB IF OPEN GRADED DRAINAGE COURSE IS USED INSTEAD OF AGGREGATE BASE.

EMPIRICAL APPROACH SLABS (AS DETAILED ON THIS GUIDE) ARE NOT REQUIRED AT THE ENDS OF BRIDGES WITH A LENGTH CONTRIBUTING TO EXPANSION OF LESS THAN 50' FOR CONCRETE BEAM BRIDGES AND LESS THAN 25' FOR STEEL BEAM BRIDGES. INSTEAD, USE A PAVEMENT SEAT WITH STANDARD PLAN R-45-SERIES REINFORCED CONCRETE PAVEMENT.

** SEE GUIDE 5.46.01 FOR TERMINATION LIMITS OF AGGREGATE BASE OR OPEN GRADED DRAINAGE COURSE.

*** THE DETAILED BRIDGE APPROACH SLAB IS BASED ON A LONGITUDINAL UNSUPPORTED LENGTH OF 10 FEET MEASURED ALONG THE CENTERLINE OF THE ROADWAY, A SLAB THICKNESS OF 12" AND A MAXIMUM CONCRETE COVER TO THE CENTERLINE OF THE BOTTOM LONGITUDINAL REINFORCEMENT OF 3". DEVIATION FROM THESE DESIGN PARAMETERS FOR SPECIFIC PROJECTS REQUIRES A COMPLETE REDESIGN OF THE BRIDGE APPROACH SLAB.

**** USE INVERTED "T" SLEEPER SLAB FOR CONCRETE AND HMA ROAD APPROACH PAVEMENT. PLACE STANDARD PLAN R-45-SERIES REINFORCED CONCRETE PAVEMENT THEN CONCRETE OR HMA ROAD APPROACH PAVEMENT.

***** USE GUARDRAIL ANCHORAGE, BRIDGE, DETAIL M4, M5 OR M6 PER STANDARD PLAN R-67-SERIES.

PLAN NOTE:
DO NOT USE WHEELED, ROLLER BASED OR MACHINE MOUNTED COMPACTION EQUIPMENT TO COMPACT THE SUBGRADE, SUBBASE, AND BASE WITHIN 10' OF THE SLEEPER SLAB AFTER IT IS BUILT. USE ONLY HAND/PLATE COMPACTORS. CONTACT PRESSURE OF COMPACTION EQUIPMENT SHALL NOT EXCEED 10 PSI.

| PREPARED BY DESIGN DIVISION | 6.20.04B |
|---|---|

| DRAWN BY: BLT<br>CHECKED BY: VZ<br>APPROVED BY: BMW | MICHIGAN DEPARTMENT OF TRANSPORTATION<br>BUREAU OF DEVELOPMENT<br><br>SLEEPER SLAB DETAILS | ISSUED: 07/25/22<br>SUPERSEDES: / / |
|---|---|---|

PLAN NOTE:
ENSURE THAT WEEP HOLES ARE OPEN AND FREE OF DEBRIS PRIOR TO PLACING EXPANSION JOINT DEVICE AND E3 JOINT.

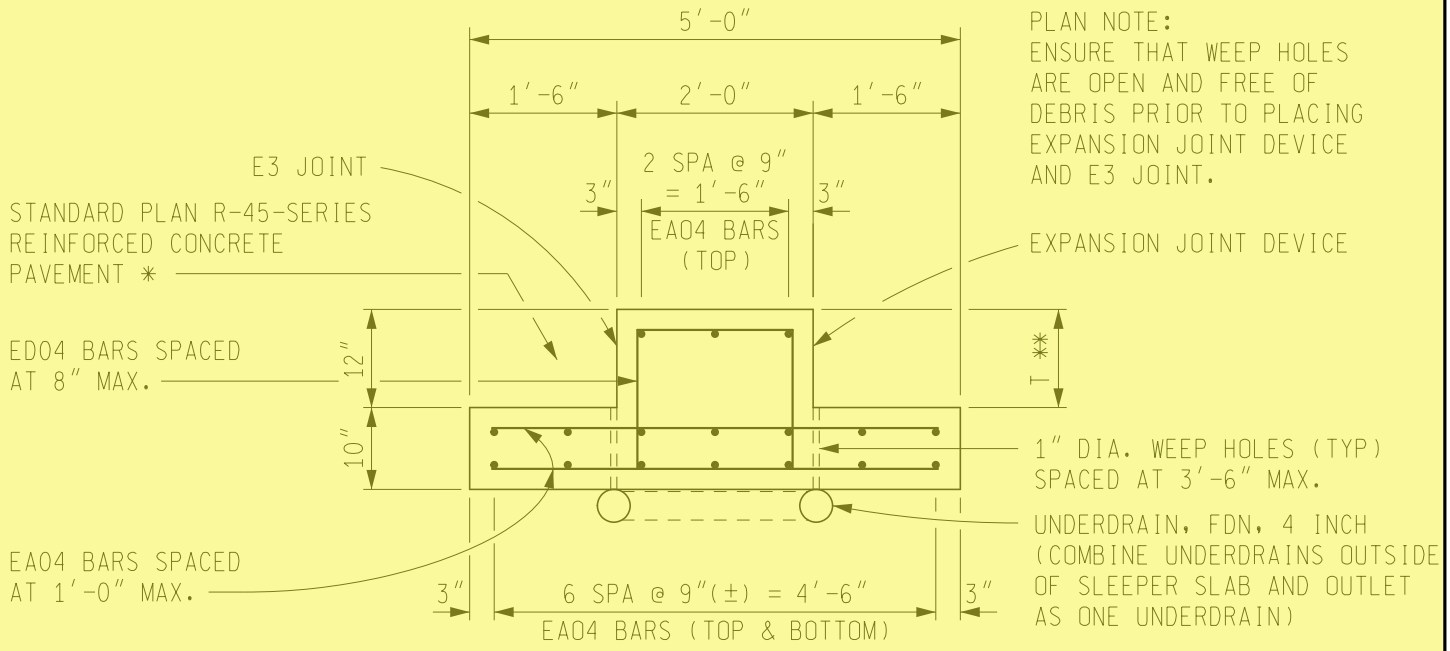


## TYPICAL SECTION THRU SLEEPER SLAB

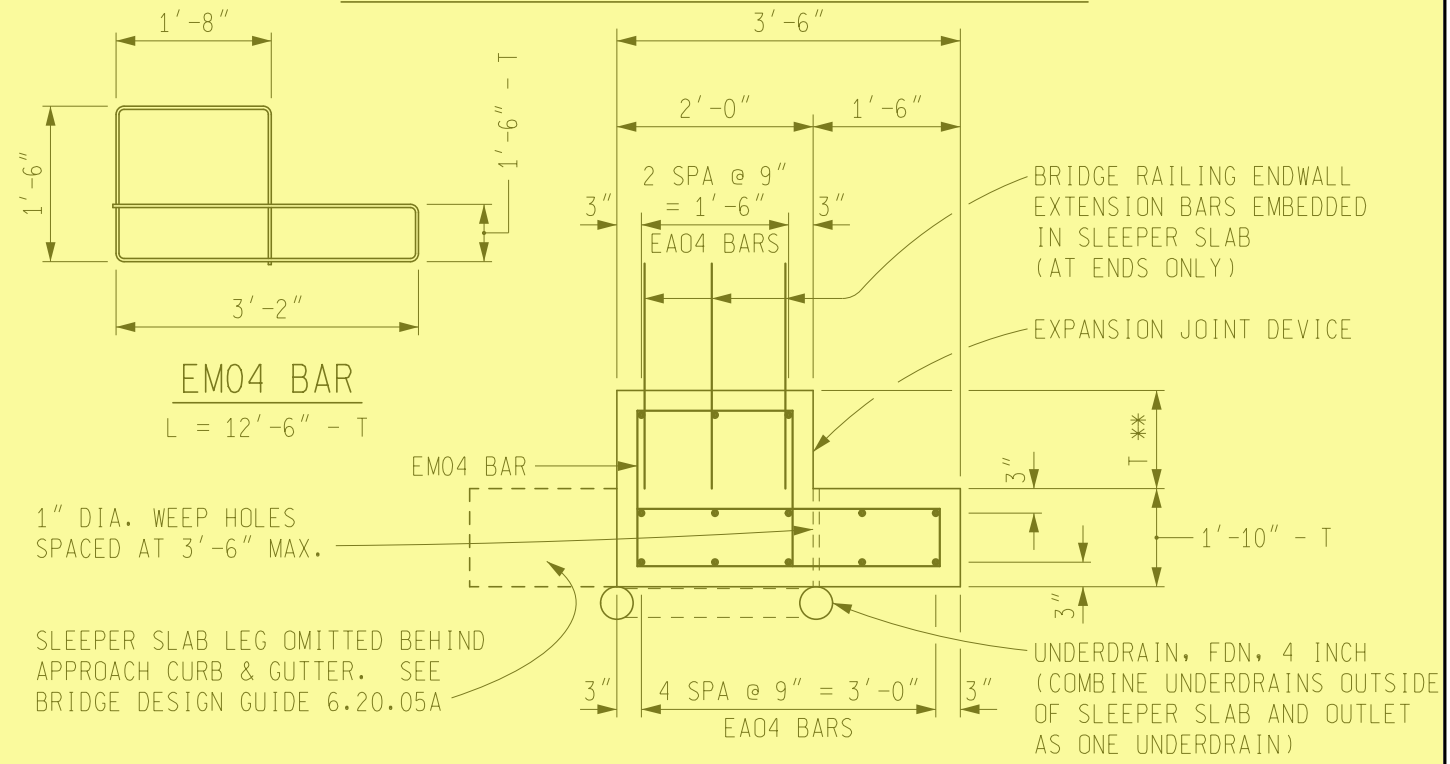


## TYPICAL SECTION THRU END OF SLEEPER SLAB BELOW BRIDGE RAILING ENDWALL EXTENSION

NOTES:
OMIT UNDERDRAIN UNDER SLEEPER SLAB IF OPEN GRADED DRAINAGE COURSE IS USED INSTEAD OF AGGREGATE BASE.

* USE STANDARD PLAN R-45-SERIES REINFORCED CONCRETE PAVEMENT WITH CONCRETE AND HMA ROAD APPROACHES. SEE STANDARD PLAN R-43-SERIES FOR TRANSVERSE JOINT LOCATIONS.

** T = APPROACH SLAB THICKNESS.
12" MINIMUM FOR DEPENDENT BACKWALL.
9" MINIMUM FOR INDEPENDENT BACKWALL.

| PREPARED BY DESIGN DIVISION | 6.20.05 |
|---|---|

| DRAWN BY: BLT<br>CHECKED BY: VZ<br>APPROVED BY: BMW | MICHIGAN DEPARTMENT OF TRANSPORTATION<br>BUREAU OF DEVELOPMENT<br><br>SLEEPER SLAB DETAILS | ISSUED: 07/25/22<br>SUPERSEDES: / / |
|---|---|---|

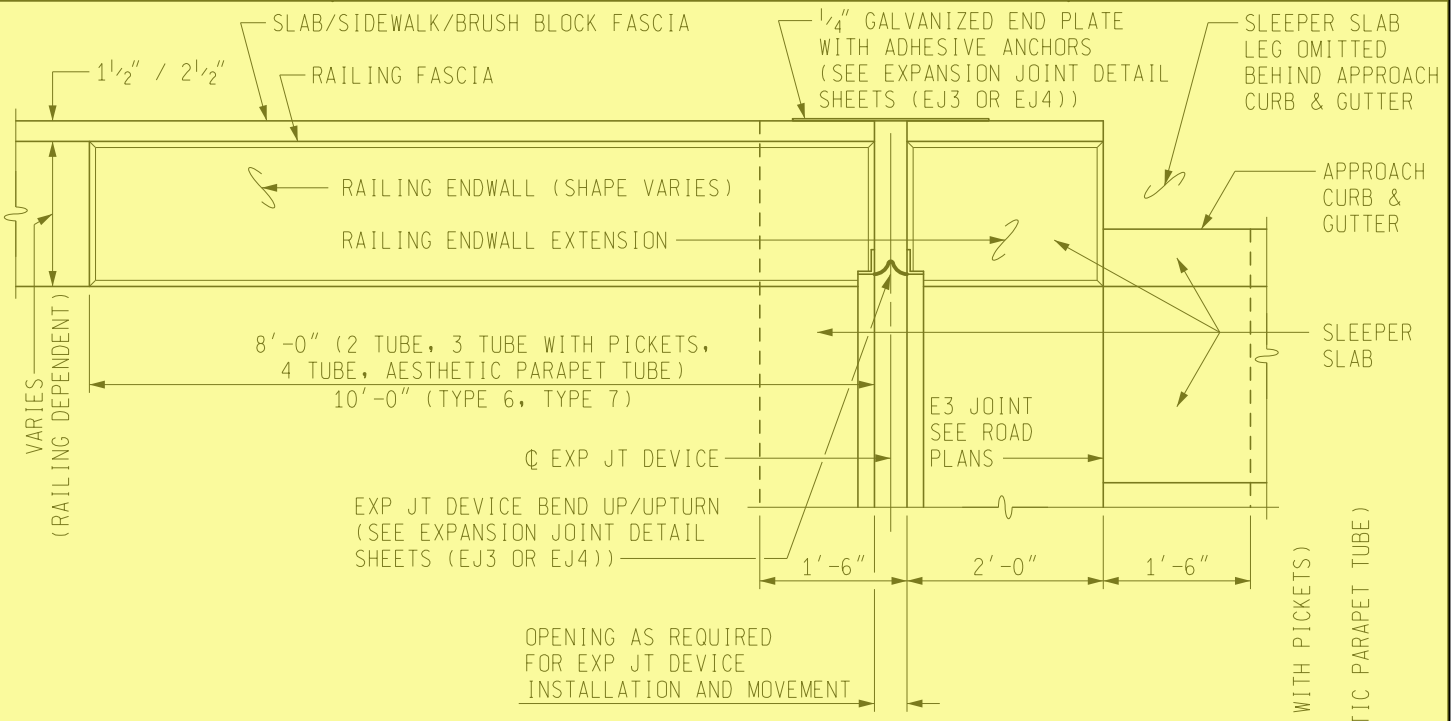


## PLAN - ENDWALL EXTENSION DETAIL

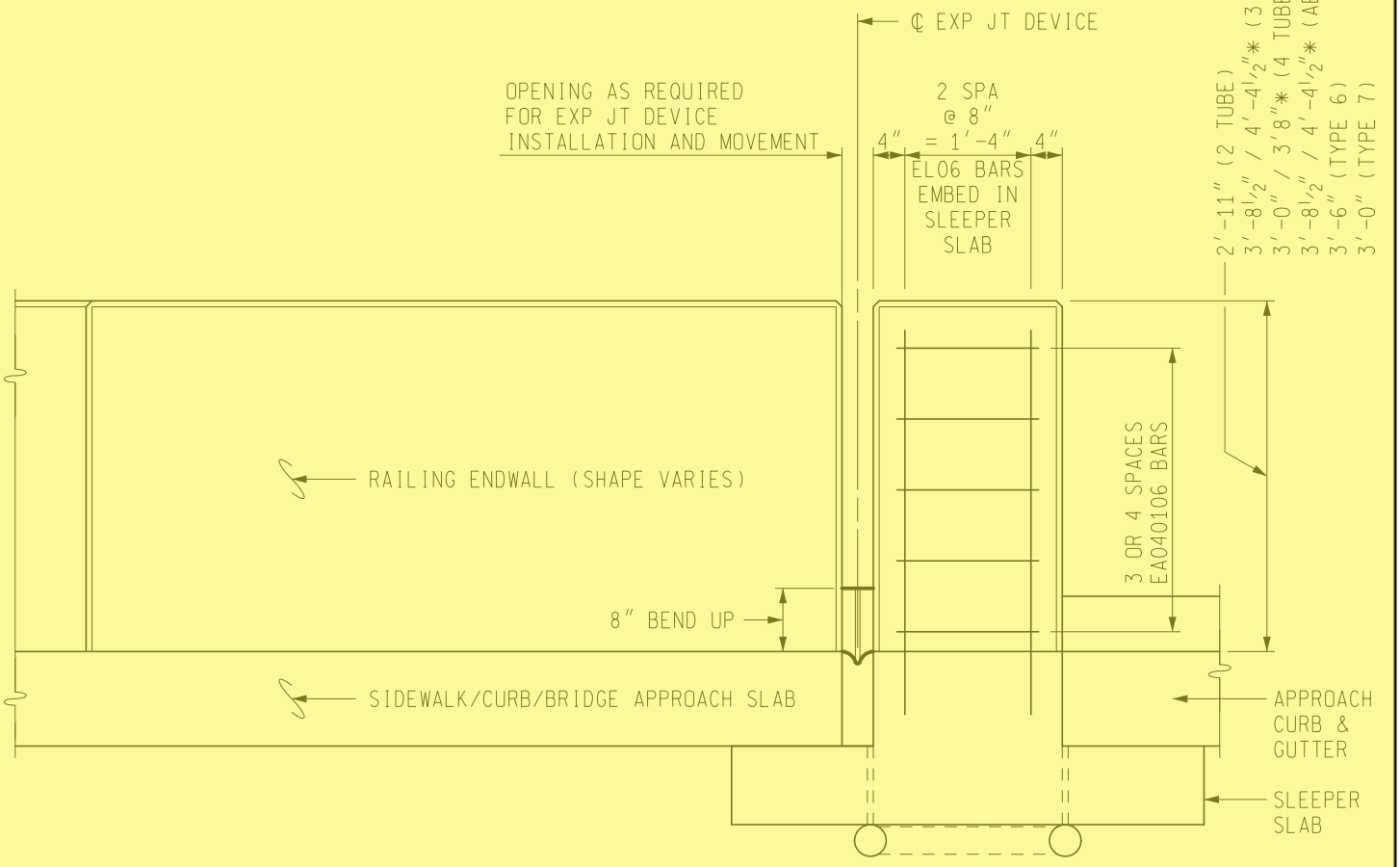


## ENDWALL EXTENSION DETAIL

* HEIGHT WITH SIDEWALK

| PREPARED BY DESIGN DIVISION | 6.20.05A |
|---|---|