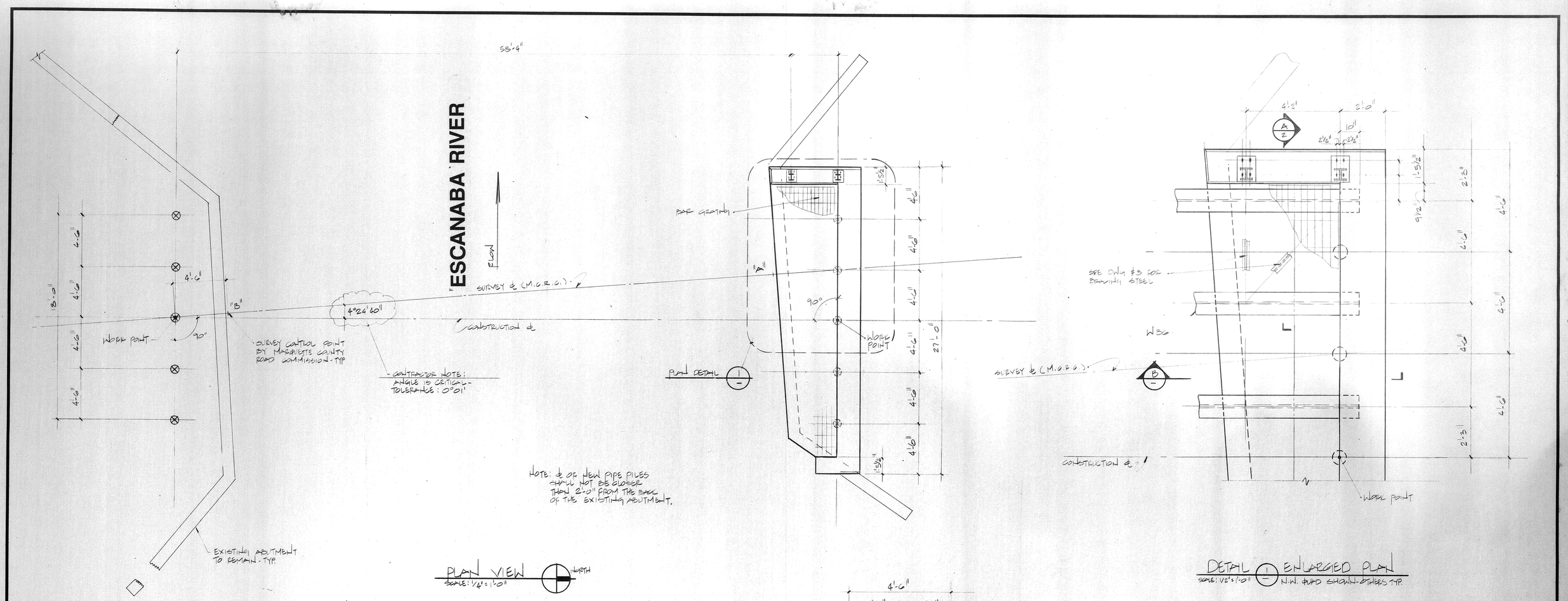

Sundberg, Carlson and Associates, Inc.
Architects · Engineers · Land Surveyors · Planners · Constructors

	INITIALS	DATE
DESIGN	B. HOISKA	8/28/85
DRAWN	J. GRAHAM	8/28/85
CHECKED	B. HOISKA	8/28/85
APPROVED		/ /

MARQUETTE CO. RD. COMMISSION

CO. RD. "EYZ" REPLACEMENT BRIDGE OVER THE ESCANABA RIVER

NO.	REVISIONS	BY	DATE
A	ISSUED FOR APPROVAL	B.H.	8-29

FIELD							
CLIENT	8/29						
DATE TO	A	B	C	O	1	2	3
CONTROL							

SUBSTRUCTURE

PROJ. NO. 8508-010 REV. NO. A

2 of 5

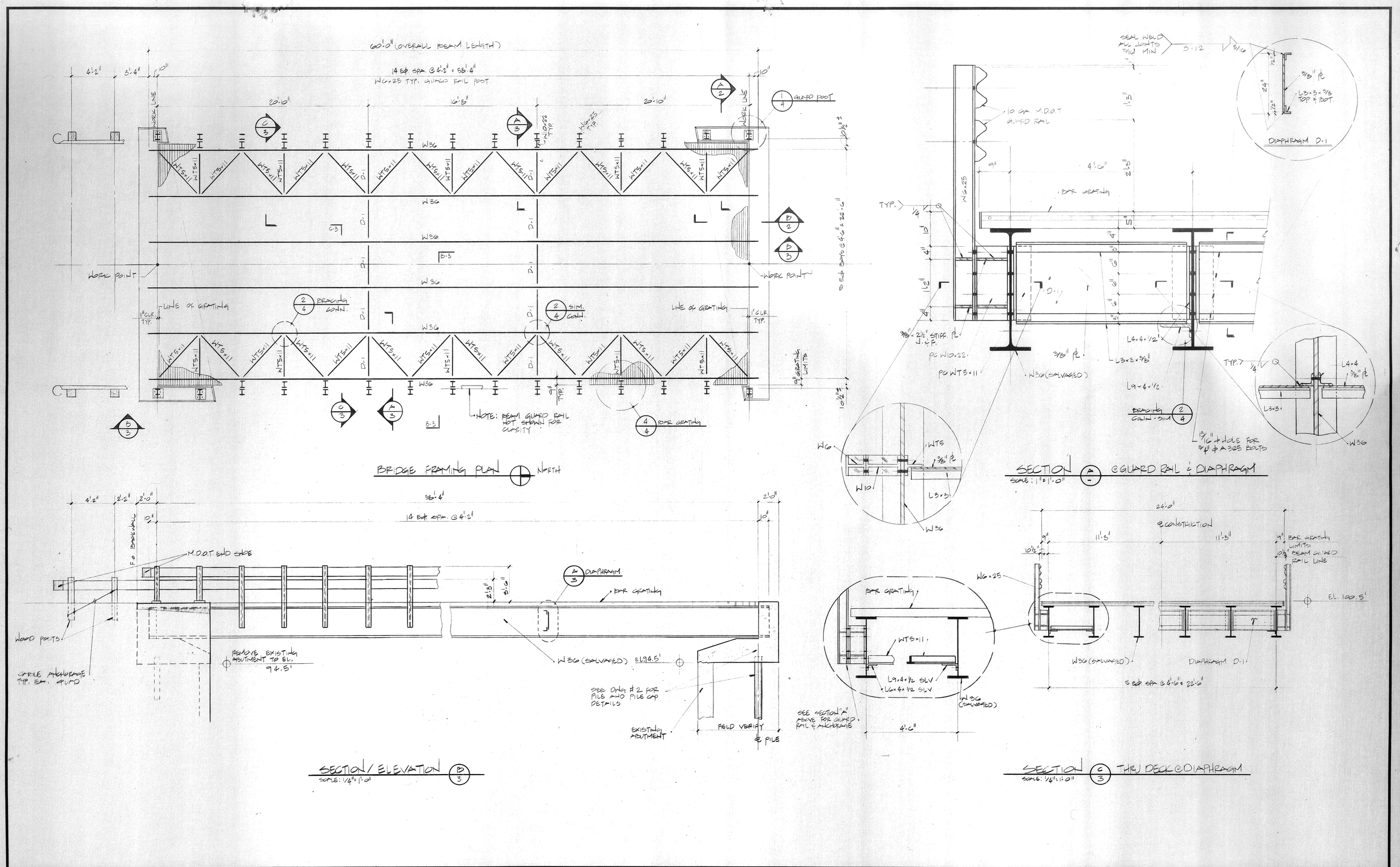

Sundberg, Carlson and Associates, Inc.
Architects · Engineers · Land Surveyors · Planners · Constructors

	INITIALS	DATE
DESIGN	B. HOISKA	/ /
DRAWN	J. GRAHAM	/ /
CHECKED	B. HOISKA	/ /
APPROVED		/ /

MARQUETTE CO. RD. COMMISSION
CO. RD. "EYZ" REPLACEMENT BRIDGE OVER THE ESCANABA RIVER

NO.	REVISIONS	BY	DATE
A	ISSUED FOR APPROVAL	JG	8-29

FIELD												
CLIENT	8-29											
DATE TO	A	B	C	O	1	2	3					
CONTROL												

SUPERSTRUCTURE

PROJ. NO. 8508-010 REV. NO. A

3 of 5

MARQUETTE OFFICE—914 WEST BARAGA AVENUE • PO BOX 100 • MARQUETTE, MICHIGAN 49855 • (906) 228-2333 UP WATS 800-441-0669 KINGSFORD OFFICE—1500 WEST BREITUNG AVENUE • KINGSFORD, MICHIGAN 49801 • (906) 774-4800

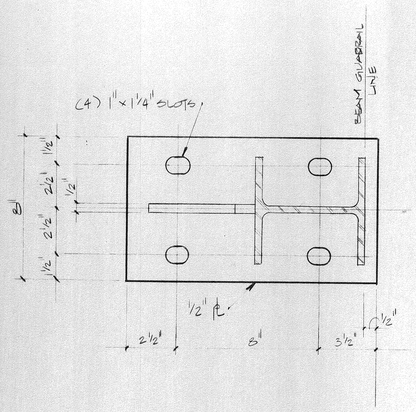

BASE PLATE

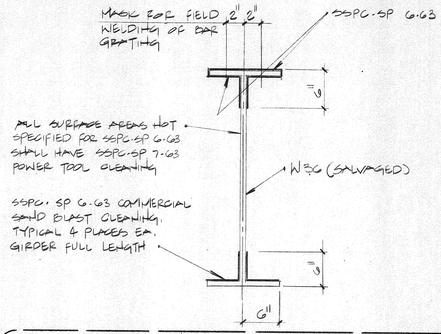

STEEL SURFACE PREPARATION

1. SURFACE PREPARATION SHALL BE IN ACCORDANCE WITH THE STEEL STRUCTURES PAINTING COUNCIL.

   SSPC-SP6.63 COMMERCIAL BLAST CLEANING: REMOVAL OF ALL RUST, MILL SCALE, PAINT AND ALL OTHER FOREIGN MATTER EXCEPT FOR SLIGHT SHADOWS OF SAME IN LESS THAN ONE THIRD OF EACH SQ. INCH OF BLASTED AREA.

   SSPC-SP7.63 BRUSH-OFF BLAST CLEANING: BLAST CLEANING OF ALL EXCEPT TIGHTLY ADHERING RESIDUES OF MILL SCALE, RUST COATINGS, EXPOSING EVENLY DISTRIBUTED FLECKS OF UNDERLYING METAL.

2. SURFACES MUST BE INSPECTED AND APPROVED BY ENGINEER JUST PRIOR TO EACH COAT.

DETAIL 5/3 CLEANING OF GIRDERS
NO SCALE

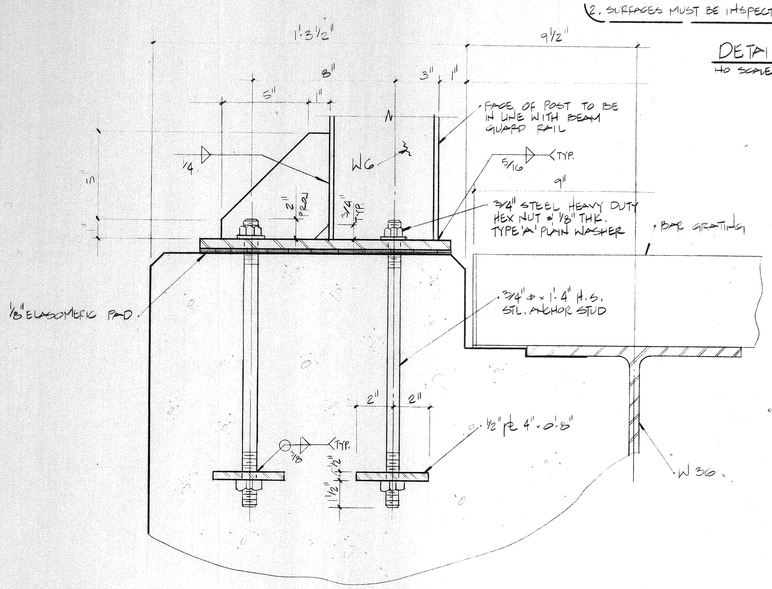

DETAIL 1/3 GUARD POST
SCALE: 3" = 1'-0"

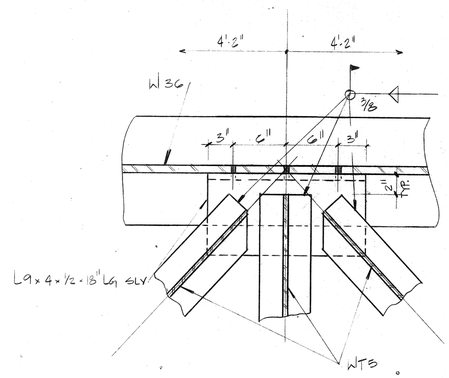

DETAIL 2/3 BRACING CONN.
SCALE: 1 1/2" = 1'-0"

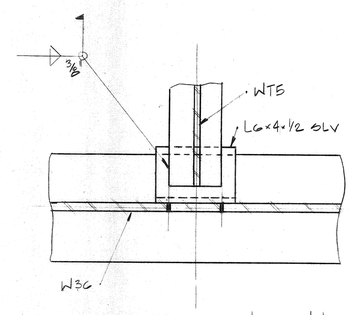

DETAIL 3/3 BRACING CONN.
SCALE: 1 1/2" = 1'-0"

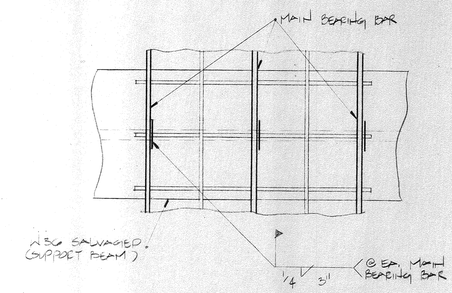

DETAIL 4/3 BAR GRATING
NO SCALE

Sundberg, Carlson and Associates, Inc.
Architects · Engineers · Land Surveyors · Planners · Constructors

	INITIALS	DATE
DESIGN	B. HOISICA	/ /
DRAWN	J. GRAHAM	/ /
CHECKED	B. HOISICA	/ /
APPROVED		/ /

MARQUETTE CO. RD. COMMISSION

CO. RD. "EYZ" REPLACEMENT BRIDGE OVER THE ESCANABA RIVER

NO.	REVISIONS	BY	DATE
A	ISSUED FOR APPROVAL	JG	8/29

FIELD
CLIENT 8/29
DATE TO A B C O 1 2 3
CONTROL

DETAILS

PROJ. NO. 8508-010 REV. NO. A

4 of 5

MARQUETTE OFFICE—914 WEST BARAGA AVENUE • PO BOX 100 • MARQUETTE, MICHIGAN 49855 • (906) 228-2333 UP WATS 800-441-0669 KINGSFORD OFFICE—1500 WEST BREITUNG AVENUE • KINGSFORD, MICHIGAN 49801 • (906) 774-4800